City of Flowery Branch
City Council Meeting
Thursday, April 16, 2026, 6:00 PM
5410 Pine Street
Flowery Branch, GA 30542

Call Work Session to Order:

Pledge of Allegiance:

Adoption of Agenda:

Awards & Recognitions:

Public Hearing:

Unfinished Business - Work Session:

a. Discussion of Alcohol Ordinance Amendments

New Business - Work Session:

a. Consideration to Award Bid #26-003 to Pro Pump Solutions, LLC for the White Horse Creek Lift Station Rehabilitation

b. Consideration of Executing the Construction Contract with Sol Construction, LLC for the Groundwater Wells #4 & #5 Reactivation Project

c. Presentation of Policy and Procedures for the Consideration of Ordinances

d. Consideration of Proposed Amendments to the Planned Unit Development (PUD) Conditions, for Purposes of Clarification, Applicable to the Commercial Use Section of Sterling on the Lake, Pursuant to Ordinance 239-N / 240-N.

Department Reports:

a. City Manager Report

b. City Clerk Report

c. Department of Fun Report

d. Finance Department Report

e. Human Resources Report

f. Planning Department Report

g. Police Department Report

h. Public Utilities Report

i. Public Works Report

j. Attorney Report

k. Council Report

Adjournment Work Session:

Voting Session Agenda

Call Voting Session to Order:

Public Comments:

Please limit to two minutes

Consent Agenda:

a. Consider March 2026 Per Diem for Mayor McClellan

b. Consider March 2026 Per Diem for Council Member Mezzanotte

c. Consider April 2, 2026 City Council Meeting Minutes

Unfinished Business - Voting Session:

New Business - Voting Session:

a. Consideration to Award Bid #26-003 to Pro Pump Solutions, LLC for the White Horse Creek Lift Station Rehabilitation

b. Consideration of Executing the Construction Contract with Sol Construction, LLC for the Groundwater Wells #4 & #5 Reactivation Project

c. Consideration of Proposed Amendments to the Planned Unit Development (PUD) Conditions, for Purposes of Clarification, Applicable to the Commercial Use Section of Sterling on the Lake, Pursuant to Ordinance 239-N / 240-N.

Executive Session:

As needed for discussion of personnel, litigation, or property.

Adjournment:

If you have a disability or impairment and need special assistance, please contact the City Clerk prior to the meeting at 770-967-6371 - Meeting agenda is subject to change.

FLOWERY BRANCH CITY COUNCIL

EXECUTIVE SUMMARY

SUBJECT: Consideration to Award Bid #26-003 to Pro Pump Solutions of America, LLC for the White Horse Creek Lift Station Rehabilitation

DATE: March 23, 2026

(X) RECOMMENDATION
( ) POLICY DISCUSSION
( ) STATUS REPORT
( ) OTHER

BUDGET INFORMATION:
ANNUAL-
CAPITAL- $64,505.80

COUNCIL ACTION REQUESTED ON: APRIL 16, 2026

PURPOSE: The purpose of this item is to award bid #26-003 for the rehabilitation of White Horse Creek lift station located at 6334 Spring Cove Drive.

HISTORY: The City of Flowery Branch sought proposals for new equipment to be used in the rehabilitation of an existing sanitary sewer lift station.

The equipment specifications were as follows:

- Two (2) submersible pumps with a Proposed Design Point (single pump running): 175 gpm @ 195' TDH (Operating point must be within the manufacturer's recommended application range). Voltage: 460V
- Two (2) Soft Starts (Telemecanique ATS48D62YU) or similar model. Different Model Soft Starts submitted need to be approved by Department Director and City Engineer.

FACTS AND ISSUES: The City of Flowery Branch sought proposals to rehabilitate White Horse Creek Lift Station. The City received four (4) proposals, that of which, only three were valid once the pre-bid attendance was verified. The three (3) proposals belonged to Cornerstone H2O, Goforth Williamson, Inc. (GWI), and Pro Pump Solutions of America, LLC (Pro Pump Solutions).

Our Director of Public Utilities, City Engineer, and ESG Engineer reviewed the proposals to identify the most favorable proposal for the City. The proposals were scored for Non-Price Factors and Price Factors.

Non-Price Factors (40 Total Points):

1. Expected performance based on pump horsepower (HP) and efficiency at the design point
2. Ability to accommodate future design points (e.g., increased head or flow) with alternate impellers
3. Expected reliability based on manufacturer's experience and references
4. Quality of materials of construction
5. Proposed equipment delivery/lead times
6. Proposed equipment layout
7. Expected maintenance requirements
8. Quality of manufacturer's warranty
9. Terms and conditions of the manufacturer's purchase agreement
10. Proposal responsiveness:
    - Completeness
    - Organization and clarity

Price Factors (60 Total Points):

1. Total equipment cost
2. Suitability of equipment for the existing site – preference will be given to proposals requiring minimal demolition or modification of existing infrastructure

It was found that Pro Pump Solutions' pump efficiency was rated the highest at 46% while GWI was rated 29% and Cornerstone H2O rated 20%.

The overall scores for each contractor were as follows:
Cornerstone H2O – 71/100 points
Goforth Williamson, Inc. (GWI) – 81/100 points
Pro Pump Solutions of America, LLC – 82/100 points

OPTIONS:
1. Award bid #26-003 2. Do not Award bid #26-003.

RECOMMENDED SAMPLE MOTION: I move we award bid 26-003 White Horse Creek Lift Station Rehabilitation to Pro Pump Solutions of America, LLC in the amount of $64,505.80.

DEPARTMENT: Finance

Prepared by: Nancy Rodriguez

CITY OF FLOWERY BRANCH

Request for Proposal

RFP No. 26-003

White Horse Creek Lift Station Rehabilitation

RFP Release:	Wednesday, October 29, 2025
Mandatory Pre-Bid Meeting:	Tuesday, December 2, 2025, 9:30 a.m. EST.
RFP Questions Deadline:	Friday, December 5, 2025, 11:00 a.m. EST.
RFP Due Date:	Tuesday, January 13, 2026, 2:00 p.m. EST.

Postal Return and/or Courier Delivery Address:

City of Flowery Branch
Finance Department
5410 Pine Street
Flowery Branch, GA 30542

TABLE OF CONTENTS

BACKGROUND 3

PROJECT INTRODUCTION 3

PROPOSAL CORRESPONDENT 3

PROPOSAL QUESTIONS 3

PROPOSAL RESPONSE DATE AND LOCATION 3

MANDATORY PRE-BID MEETING: 4

PROPOSED SCHEDULE: 4

SCOPE OF WORK 4

WHITE HORSE CREEK LIFT STATION REHABILITATION

EQUIPMENT SPECIFICATIONS 4

ADDITIONAL WORK 5

PROPOSER RESPONSIBILITY 5

LIABILITY AND INSURANCE 6

PROPOSAL REQUIREMENTS 7

EVALUATION CRITERIA 8

AWARD AND EXECUTION 9

GENERAL CONDITIONS 9

PROPOSAL CERTIFICATION 13

ADDENDUM ACKNOWLEDGEMENT 14

PROPOSAL LABEL 15

PROPOSAL INFORMATION SHEET 16

EXHIBIT A 17

BACKGROUND

Located on Lake Lanier and just over forty miles from Atlanta, Flowery Branch has maintained a picturesque historic downtown. Recent investment, including streetscape improvements and a revitalized train depot, is beginning to revitalize the downtown area, known as "Old Town." Many of the original buildings in the historic central business district still exist and have been rehabilitated and repurposed.

PROJECT INTRODUCTION

The City of Flowery Branch is seeking proposals for new equipment to be used in the rehabilitation of an existing sanitary sewer lift station. This Request for Proposals (RFP) is for the purchase of equipment only – installation is to be provided by Pro Pumps Solutions of America, LLC. via a separate contract.

The equipment specifications are as follows:

- Two (2) submersible pumps with a Proposed Design Point (single pump running): 175 gpm @ 195' TDH (Operating point must be within the manufacturer's recommended application range). Voltage: 460V
- Two (2) Soft Starts (Telemecanique ATS48D62YU) or similar model. Different Model Soft Starts submitted need to be approved by Department Director and City Engineer.

RFP CORRESPONDENT

Upon Release of this Proposal, all vendor communications concerning this acquisition must be directed to the Finance Department correspondent listed below:

City of Flowery Branch
Attn: Nancy Rodriguez
5410 Pine Street, Flowery Branch, GA. 30542
Phone: (770-967-6371) ext. 111
Nrodriguez@flowerybranchga.org

Unauthorized contact regarding the Bid with other City of Flowery Branch employees may result in disqualification. Any oral communications will be considered unofficial and non-binding on the City of Flowery Branch. Vendors should rely only on written statements issued by the Bid correspondent.

RFP QUESTIONS

All questions must be submitted in writing to the correspondent named above. Questions must be received by 11:00 a.m. EST on Friday, December 5, 2025. A list of questions and answers will be provided to all known Proposer and posted on the city website at www.flowerybranchga.org/BIDs.

RFP RESPONSE DATE AND LOCATION

The Finance Department must receive the vendors' proposals in a sealed envelope, in its entirety, no later than 2:00 p.m., Eastern Standard Time to 5410 Pine Street, Flowery Branch, Georgia on Tuesday, January 13, 2026. Proposals arriving after the deadline will be returned unopened to their senders. All proposals and accompanying documentation will become the property of the City of Flowery Branch and may not be returned. **Proposals must be clearly marked on the outside of the package with the Proposal Label.**

Vendors assume the risk of the chosen method of dispatch. The City of Flowery Branch assumes no responsibility for delays caused by any delivery service. Postmarking by the due date will not substitute for an actual proposal receipt. Late proposals will not be accepted, nor will additional time be granted to any vendor. Proposals may not be delivered by facsimile transmission or other telecommunication or solely by electronic means.

MANDATORY PRE-BID MEETING:

A mandatory pre-bid meeting will be held on Tuesday, December 2, 2025, at 9:30 a.m. EST at City Hall Community Room, 5410 Pine Street, Flowery Branch, GA 30542 to then travel to Lift Station site. Attendance is required for all interested vendors. Questions must be provided during this time or by the deadline of Friday, December 5, 2025, at 11:00 a.m. EST.

PROPOSED SCHEDULE:

BID Release:	Wednesday, October 29, 2025
Mandatory Pre-Bid Meeting:	Tuesday, December 2, 2025, 9:30 a.m. EST.
BID Questions Deadline:	Friday, December 5, 2025, 11:00 a.m. EST.
BID Due Date:	Tuesday, January 13, 2026, 2:00 p.m. EST.
City Council Award of Contract:	TBD
Contract Effective Date	TBD

SCOPE OF WORK

The City of Flowery Branch is seeking proposals for the supply of new equipment to be used in the rehabilitation of an existing sanitary sewer lift station (White Horse Creek Lift Station).
This Request for Proposals (RFP) is for the purchase of equipment only. Installation services will be provided separately by Pro Pumps Solutions of America, LLC under a different contract.

The specifications are provided as a minimal requirement only. The City will consider any product that meets or exceeds the minimum requirements. The Proposer shall provide information regarding the proposed product for evaluation by the City.

Evaluation of proposals will consider both quantitative (cost) and qualitative (non-cost) factors, weighted as outlined in the Proposal Requirements document.
If an award is made, the City will issue a purchase order to the successful Proposer within sixty (60) days of award notification.

WHITE HORSE CREEK REHABILITATION

I. Equipment Specifications

A. Submersible Pumps

- Quantity: Two (2)
- Proposed Design Point (single pump operating): 175 gallons per minute (GPM) @ 195 feet Total Dynamic Head (TDH)
- Operating point must fall within the manufacturer's recommended application range.
- Voltage: 460V

B. Soft Starters
- Quantity: Two (2)
- Model: Telemecanique ATS48D62YU or approved equal.
- Alternate models must receive approval from both the Department Director and the City Engineer prior to acceptance.

II. Additional Work

The City may add to these specifications with the joint approval of the Contractor and the City. All modifications shall be in writing.

A. In the event that the City requires additional work outside of these specifications, the Contractor shall perform all work at a competitive industry price.
B. Additional work may be added to the contract as the need arises. The Contractor shall perform all specified and approved additional work.
C. The Contractor must be willing to provide a competitive price for additional work that may be added to the contract. The contractor will be required to demonstrate the ability to properly execute the expanded workload.

PROPOSER RESPONSIBILITY

When determining whether a Proposer is responsible, or when evaluating a proposal, the following factors may be considered, any one of which will suffice to determine whether a Proposer is responsible, or the proposal is the most advantageous to the City:

A. The ability, capacity, and skill of the Proposer(s) to perform the contract or provide the equipment and/or service required.
B. The character, integrity, reputation, judgment, experience, and efficiency of the Proposer(s).
C. Whether the Proposer(s) can perform the contract within the time specified.
D. The quality of performance of previous public and private contracts or services, including, but not limited to, Proposer's failure to perform satisfactorily or complete any written contract. The City's termination for default of a previous contract with a Proposer, within the past three years, shall be deemed to be such a failure.
E. The previous and existing compliance by the Proposer(s) with laws relating to the contract or service.
F. Evidence of collusion with any other Proposer(s), in which case colluding Proposer(s) will be restricted from submitting further proposals on the subject project or future proposals, for a period not less than three years.
G. All employees, subcontractors or contractors performing cleaning services in any City-owned building must be submitted to pass a thorough criminal background investigation with no convictions, other than minor traffic violations.
H. The Proposer(s) have been convicted of a crime of moral turpitude or any felony, excepting convictions that have been pardoned, expunged, or annulled, whether in this state, in any other state, by the United States, or in a foreign country, province or municipality. The Proposer(s) shall affirmatively disclose to the City all such convictions, especially of management personnel or the Proposer(s) as an entity, prior to the notice of award or execution of a contract, whichever comes first. Failure to make such affirmative disclosure shall be grounds, in the City's sole opinion and discretion, for termination for default subsequent to the award or execution of the contract.
I. If the Proposer(s) will be unable, financially, or otherwise, to perform the work.
J. At the time of the proposal opening, the Proposer is not authorized to do business in Georgia, or otherwise lacks a necessary license, registration, or permit.
K. Any other reason deemed proper by the City.

LIABILITY AND INSURANCE

During the performance of the duties outlined in the Scope of Work of this proposal, the successful Proposer shall procure the following insurance, which shall be full coverage insurance not subject to self-insurance provisions, except for vehicle collision insurance and comprehensive automobile coverage and shall not, of the Contractor's initiative, cause such insurance to be cancelled or materially altered during the contract term. The Proposer must provide evidence, satisfactory to the City, of the following insurance requirements:

A. Owner requires the Proposer to have and maintain the following insurance coverage and indemnification provisions with the City of Flowery Branch named as an additional insured hereunder.

B. The Proposer agrees to provide and maintain insurance coverage until the contract is completed and to furnish certificates from its insurance carriers showing that it carries insurance in the following minimum limits:

▪ Workers' Compensation	Statutory Minimum $100,000/accident
▪ Employers Liability	$1,000,000
▪ Bodily Injury Liability	$1,000,000
▪ Except Automobile	$1,000,000 aggregate
▪ Property Damage Liability	$1,000,000 each occurrence
▪ Except Automobile	$1,000,000 each occurrence
▪ Automobile Bodily Injury	$1,000,000 each person
▪ Liability	$1,000,000 each occurrence
▪ Automobile Property Damage Liability	$1,000,000 each occurrence
▪ Excess Umbrella Liability	$2,000,000 each occurrence

C. PROOF OF INSURANCE

The Proposer shall furnish the Owner with certificates showing the type, amount, class of operations covered, effective dates, and date of expiration of policies. Such certificates shall also contain substantially the following statement: The insurance covered by this certificate will not be cancelled or materially altered, except after thirty (30) days written notice has been received by the Owner.

D. INDEMNIFICATION

The Proposer shall indemnify, protect, defend and hold harmless the City, and any and all of its employees, officials and agents from and against any liability (including liability for claims, suits, actions, arbitration proceedings, administrative proceedings, regulatory proceedings, losses, expenses or costs of any kind, whether actual, alleged or threatened, including attorney's fees and costs, court costs, interest, defense costs and expert witness fees), where the same arise out of, are a consequence of, or are in any way attributable to, in whole or in part, the performance of the contract by Proposer or by any individual or entity for which Proposer is legally liable, including but not limited to officers, agents, employees or subcontractors of Proposer.

PROPOSAL REQUIREMENTS

The following instructions outline the process for preparing and submitting Proposals. Proposers must fulfill all requirements as specified in this Request for Proposals (RFP).

Must submit one (1) original, and one (1) electronic copy on a flash drive.

A. Type of Proposal

The selection of new lift station equipment is being made through a Request for Proposal process, which includes consideration of both quantitative (cost) and qualitative (non-cost) factors. Price factors include capital costs, operation, and maintenance considerations.

The qualitative factors are an important selection criterion that the OWNER and ENGINEER believe impact the value and quality of the furnished product. The proposals received will be evaluated on both quantitative and qualitative factors as further discussed in the Basis of Selection Section.

B. Preparation of Proposals

Proposers shall complete the Proposal Information Sheet provided herein.

- All blank spaces on the forms must be filled in using blue or black ink.
- Where both figures and written amounts are requested, written amounts shall govern in the event of a discrepancy.
- The Proposer must acknowledge receipt of all addenda in their proposal.
- Proposals lacking acknowledgment or without required addenda may be considered non-conforming.
- Bid Bond not required if total proposal amount does not exceed two-hundred fifty thousand dollars ($250,000.00) per O.C.G.A. § 36-91-50.

C. Submission of Proposals

All Proposals must be submitted no later than the date and time prescribed, in the manner set forth in the Request for Proposals. Proposals must be made on the Proposal Information Sheet provided. Each Proposal must be submitted completely, in a single envelope, and must be clearly marked on the outside of the package with the Proposal Label.

D. Information Required in Proposal

Proposals must include sufficient technical and descriptive data to permit a complete evaluation. Submissions lacking necessary details will be considered non-responsive.

Each Proposal shall include the following documentation and information:

1. Completed Proposal Information Sheet
2. Pump Curve: showing Head vs. Flow on the X-Y axis and including horsepower (HP), efficiency, and recommended impeller model/diameter
3. Manufacturer's Catalog Information
4. Warranty Information
5. Equipment Delivery / Lead Time
    a. Time from purchase order issuance to delivery of submittals
    b. Time from submittal approval to delivery of all equipment/components
6. List of Model Reference Installations, including:
    a. Location
    b. Design Flow/Head

c. Number of Units
d. Date of Operation
e. Reference Contact Information
f. Make, Model, Weight and Horsepower of each pumping system
g. Identification of Material of Construction for:
    i. Impeller & Insert Ring
    ii. Pump Housing
    iii. Mechanical Seals
h. Dimensional Plan and Sections
i. Inlet and Discharge Piping Sizes
j. Electric Motor Nameplate Data
k. Painting / Coating Information
l. Maintenance Requirements and Frequencies
m. Narrative of how Required Maintenance Activities are to be performed (including parts that are to be removed to provide access for maintenance, etc.)
n. Control Panel Information – See Equipment Specifications
o. Miscellaneous / Installation Services - See Equipment Specifications

EVALUATION CRITERIA

The City of Flowery Branch, with the assistance of the Engineer, will evaluate proposals based on both quantitative and qualitative criteria. The evaluation process may include additional investigations deemed necessary to assess proposer performance, reliability, and capability.

The criteria listed below (total of 100 points) will be used for scoring; however, the City reserves the right to consider additional factors as deemed in the best interest of the project.

Proposals providing partial monetary refunds/discounts to the City in the event the proposed lead times are exceeded will be highly valued as part of the City's scoring/evaluation.

The City reserves the right to reject any or all proposals, or to waive informalities and irregularities, in order to act in the best interest of the project.

A. <u>Non-Price Factors (40 Points Total)</u>

1. Expected performance based on pump horsepower (HP) and efficiency at the design point
2. Ability to accommodate future design points (e.g., increased head or flow) with alternate impellers
3. Expected reliability based on manufacturer's experience and references
4. Quality of materials of construction
5. Proposed equipment delivery/lead times
6. Proposed equipment layout
7. Expected maintenance requirements
8. Quality of manufacturer's warranty
9. Terms and conditions of the manufacturer's purchase agreement
10. Proposal responsiveness:
    a. Completeness
    b. Organization and clarity

B. Price Factors (60 Points Total)

1. Total equipment cost
2. Suitability of equipment for the existing site – preference will be given to proposals requiring minimal demolition or modification of existing infrastructure

AWARD AND EXECUTION

The Owner's agreement will be executed directly with the equipment manufacturer. The Owner will either self-perform the installation or contract separately with ***Pro Pump Solutions of America, LLC*** for installation of the equipment.

The selected vendor shall provide startup services and a full manufacturer's warranty for all supplied equipment.

The City will select the proposal that, in its sole discretion, is determined to be the most responsive and responsible to the City's needs. The City reserves the right to make an award without further discussion of the submitted proposals; therefore, each proposal should be prepared and submitted on the most favorable terms available to the Proposer.

The City of Flowery Branch reserves the right to alter the specifications based on the Proposer's submittal and to negotiate increases or reductions in equipment or services with the selected manufacturer prior to award and execution.

Should the Owner require additional time to make an award, the award period may be extended by mutual agreement between the Owner and the successful Proposer. If an award has not been made within sixty (60) days of the proposal opening date (or within the mutually agreed-upon extension period), the Proposer may withdraw the proposal without further liability to either party.

GENERAL CONDITIONS

I. WAIVER OF TECHNICALITIES

All items must meet or exceed specifications as stated by the City of Flowery Branch. The City of Flowery Branch reserves the right to waive any technicalities and to reject or accept any proposal in its entirety or to accept any portion thereof if it is determined that either method results in lower costs, better service, final satisfaction or is otherwise determined to be in the best interest of the City of Flowery Branch. The award may be made by item number or in total. Determination of best response to proposal will be the sole judgment of the City of Flowery Branch. Proposal shall remain valid for sixty days from the date of bid opening.

II. BONDING REQUIREMENTS

Bid, performance and payment bonds shall be required for all contracts where the cost is two-hundred fifty thousand dollars ($250,000.00) or greater as required per O.C.G.A. § 36-91-50.

a. Bid Bonds
   i. The bid bond must be in an amount of not less than 5 percent of the total amount payable by the terms of the contract. In lieu of a bid bond, the city may accept a cashier's check, certified check, or cash deposit in an amount of not less than 5 percent of the total amount payable by the terms of the contract. If the contract does not exceed $750,000.00, the city may also accept an irrevocable letter of credit in lieu of the bid bond. No bid or proposal shall be considered to be complete unless a

bid bond has been submitted. O.C.G.A. § 36-91-50(d). If a bid bond is required and the contractor fails to provide it, the contract shall be invalid. O.C.G.A. § 36-91-50(d). The city must approve the form and solvency of the surety prior to acceptance of the bid or proposal. O.C.G.A. § 36-91-40(a)(2).

b. Performance Bonds
    i. The performance bond shall be in the amount of at least the total amount payable by the terms of the contract and shall be increased as the contract amount is increased. O.C.G.A. § 36-91-70. If the public works construction contract is less than $750,000.00, the local government may accept an irrevocable letter of credit instead of a performance bond. O.C.G.A. § 36-91-71. No public works construction contract requiring a performance bond shall be valid for any purpose unless the contractor shall give such performance bond. O.C.G.A. § 36-91-70. The affected city may recover any damages resulting from the contractor's breach by filing an action within one year of the completion of the project and acceptance of the work. O.C.G.A. § 36-91-72. The city must approve the form and solvency of the surety prior to the execution of the contract. O.C.G.A. § 36-91-40(a)(2).

c. Payment Bonds
    i. The payment bond shall be in the amount of at least the total amount payable by the terms of the initial contract for the use and protection of all subcontractors, and all persons supplying labor, materials, machinery, and equipment in the conduct of work provided in the contract. O.C.G.A. § 36-91-90. In lieu of a payment bond, the city may accept, in its discretion, a cashier's check, certified check, or cash in the amount of at least the total amount payable by the terms of the contract. O.C.G.A. § 36-91-90. No public works construction contract requiring a payment bond shall be valid for any purpose. O.C.G.A. § 36-91-91. The city must approve the form and solvency of the surety prior to the execution of the contract. O.C.G.A. § 36-91-40(a)(2).

III. NON-COLLUSION

Vendor(s), by submitting a proposal, certify that the accompanying proposal is not the result of, or affected, by any unlawful act of collusion with any other person or company engaged in the same line of business or commerce, or any other fraudulent act punishable under Georgia or United States law.

IV. PROPOSAL REJECTION

The City of Flowery Branch reserves the right to reject any or all proposals at any time without penalty. ***Any vendor, who acts as a supplier to another vendor submitting a proposals and also submits a proposal of their own, will be viewed as participating in Collusive behavior. This behavior displays a pattern or practice of unethical or immoral business practices. Any vendor associated with this practice may be banned from doing business with the City of Flowery Branch for up to three years.***

V. MODIFICATION OF PROPOSALS

Any clerical mistake that is patently obvious on the face of the proposal may, subject to the limitations described below, be corrected upon written request and verification submitted by the Proposer. A non-material omission in a proposal may be corrected if the Finance Department determines that correction to be in the City's best interest. Omissions affecting or relating to any of the following shall be deemed material and shall not be corrected after proposal opening:

(1) Price Information; and
(2) Any Required Insurance

VI. WITHDRAWAL OF PROPOSALS

Proposals may be withdrawn at any time prior to the proposal opening. After proposals have been opened, withdrawal of a proposal shall be based upon the following:
The Proposer shall give notice in writing of his claim of right to withdraw his proposal due to an error within two business days after the conclusion of the proposal opening procedure. Proposals may be withdrawn from consideration if the price is substantially lower than the other proposals due solely to a mistake therein, provided the proposal was submitted in good faith, and the mistake was a clerical mistake as opposed to a judgment mistake, and was actually due to an unintentional arithmetic error or an unintentional omission of a quantity of work, labor or material made directly in the compilation of the proposal, which unintentional arithmetical error or unintentional omission can be clearly shown by objective evidence drawn from inspection of original work papers, documents and materials used in the preparation of the proposal sought to be withdrawn. The Proposer's original work papers shall be the sole acceptable evidence of error and mistake if he elects to withdraw his proposal. If a proposal is withdrawn under the authority of this provision, the lowest remaining responsive proposal shall be deemed to be the low proposal.

VII. NON-ENDORSEMENT

As a result of the selection of a vendor to supply products and/or services to the City of Flowery Branch, the City of Flowery Branch is neither endorsing nor suggesting that the vendor's product is the best or only solution. The vendor agrees to make no reference to the City of Flowery Branch in any literature, promotional material, brochures, sales presentation, or the like without the express written consent of the City of Flowery Branch.

VIII. PROPRIETARY MATERIAL

Any information contained in the proposal that is proprietary will be neither accepted nor honored. All information contained in this proposal is subject to public disclosure.

IX. RESPONSE PROPERTY OF THE CITY OF FLOWERY BRANCH

All material submitted in response to this request becomes the property of the City of Flowery Branch. Selection or rejection of a response does not affect this right.

X. NO OBLIGATION TO BUY

The City of Flowery Branch reserves the right to refrain from contracting with or purchasing from any vendor. The release of this Proposal does not compel the City of Flowery Branch to purchase.

XI. COST OF PREPARING PROPOSALS

The City of Flowery Branch is not liable for any cost incurred by vendors in the preparation and presentation of proposals and demonstrations submitted in response to this proposal.

XII. NUMBER OF COPIES REQUIRED

Vendors are to submit (1) original bid and one (1) electronic copy on a flash drive.

XIII. ADDENDA

Proposers are responsible for checking the City of Flowery Branch's website for the issuance of any addenda prior to submitting a proposal. The address is **https://www.flowerybranchga.org/BIDs**

**The City of Flowery Branch is an equal opportunity owner/employer and will not discriminate against any vendor because of race, creed, color, religion, sex, national origin, or ADA disability status.

*** The City of Flowery Branch will comply with Title VI of the Civil Rights Act of 1964, 78 Stat. 252, 42 USC 2000d—42 USC 2000d—4 (hereinafter referred to as the Act), and all requirements imposed by or pursuant to Title 49, Code of Federal Regulations, Department of Transportation, Subtitle A, Office of the Secretary Part 21, Nondiscrimination in Federally Assisted Programs of the Department of Transportation—Effectuation of Title VI of the Civil Rights Act of 1964 (hereinafter referred to as the Regulations), and other pertinent directives, to the end that in accordance with the Act, Regulations, and other pertinent directives, no person in the United States shall, on the grounds of race, color, sex, or national origin be excluded from participation in, be denied the benefits of, or be otherwise subjected to discrimination under any program or activity for which the Recipient receives federal financial assistance from the Department of Transportation, including the Federal Highway Administration, and HEREBY GIVES ASSURANCE THAT it will promptly take any measures necessary to effectuate this agreement.

City of Flowery Branch
PROPOSAL CERTIFICATION
RFP No. 26-003 White Horse Creek Lift Station Rehabilitation

This form must be completed and signed for the proposal to be considered.

With my signature, I certify that I am authorized to commit my firm to the proposal and that the information herein is valid for 60 days from this date. I further certify that all information presented herein is accurate and complete and that the scope of work can be performed as presented in this proposal upon the City's request.

Postal Return and/or Courier Delivery Address:

City of Flowery Branch
Finance Department
5410 Pine Street Flowery Branch, GA 30542

PROPOSAL RESPONSE:

PRICE: $_____ **SEE PAGE 16**

Please attach specific pricing details that itemize costs by task, including contractor staff time and hourly rates, and other direct costs (materials, supplies, etc.). (In the event of discrepancies between the specific pricing details and this page, this page will be deemed to convey the contractor's accurate proposal.)

Having read and responded to all attached specifications, the undersigned offers the above quoted prices, terms, and conditions.

Signed, sealed, and delivered in the presence of:

_____ By: _____
Unofficial Witness (Person authorized to sign binding contract)

Title: _____

_____
Notary Public Attest: _____
Commission Expires: _____ (Officer of Company if Corporation)

Title: _____

Company Name: _____

CITY OF FLOWERY BRANCH

ADDENDUM ACKNOWLEDGEMENT

BID 26-003

WHITE HORSE CREEK LIFT STATION REHABILITAION

PLEASE LIST ISSUED ADDENDUM(S)

Addendum Number(s)

_____ _____

_____ _____

_____ _____

☐ **NO ADDENDA WERE RECEIVED**

COMPANY NAME: _____

CONTACT PERSON: _____

ADDRESS: _____

CITY:_____ **STATE:**_____ **ZIP:**_____

PHONE: FAX: _____

EMAIL ADDRESS: _____

By signing below, I hereby acknowledge receipt of the supplement pertaining to the above referenced bid.

SIGNATURE: _____**DATE:** _____

UPON RECEIPT, PLEASE PRINT AND ADD TO YOUR PROPOSAL.

AFFIX THIS LABEL IN A VISIBLE LOCATION ON SEALED PROPOSAL

RFP Title:	**RFP No. 26-003 White Horse Creek Lift Station Rehabilitation**
Company:	
Contact Person:	
Contact Phone:	
RFP Due Date:	Tuesday, January 13, 2026, at 2:00 P.M.

DELIVER ONLY TO:

City of Flowery Branch

Attn: Finance Department

5410 Pine Street

Flowery Branch, GA 30542

Internal Use Only:

Received:

THIS SEALED PROPOSAL WILL REMAIN CLOSED UNTIL THE ADVERTISED PROPOSAL OPEN DATE AND TIME BY THE FINANCE DEPARTMENT.

PROPOSAL INFORMATION SHEET

Company Name:		
Proposer Address:		
Proposer Contact:		
Proposer Telephone Number:		
Proposer Email Address:		
Addenda Acknowledgement *(Proposer shall insert number of each Addendum received):*	Addenda Numbers: _____ _____ _____	
Number of Years as a Supplier of a Pump of this Type:		
Pump Model:		
Equipment Price: *(Including manufacturing, materials, labor, delivery/freight, startup services, performance test, operator training, etc.)*		US Dollars
Submittal Lead Time from Purchase Order:		Days
Equipment Lead Time from Approved Submittal:		Days
Refunds/discounts to the City in the event the proposed lead times are exceeded		$/Day
Travel/site time included for manufacturer's representative services (such as pump startup):		Trips/days

EXHIBIT A

REFERENCE RFP #26-003

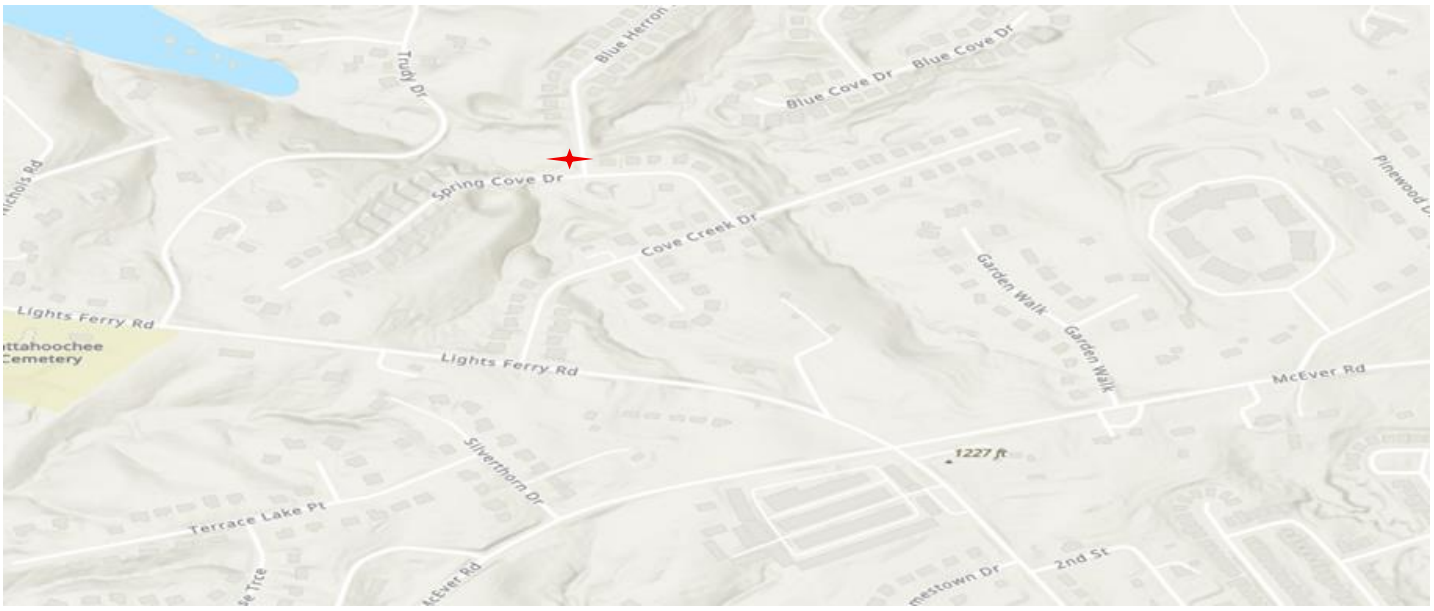

END EXHIBIT A.

AFFIX THIS LABEL IN A VISIBLE LOCATION ON SEALED PROPOSAL

RFP Title:	**RFP No. 26-003 White Horse Creek Lift Station Rehabilitation**
Company:	PRO PUMP SOLUTIONS OF AMERICA, LLC.
Contact Person:	MIKE VENTRY
Contact Phone:	706-633-4445
RFP Due Date:	Tuesday, January 13, 2026, at 2:00 P.M.

DELIVER ONLY TO:

City of Flowery Branch

Attn: Finance Department

5410 Pine Street

Flowery Branch, GA 30542

Internal Use Only:

Received:

THIS SEALED PROPOSAL WILL REMAIN CLOSED UNTIL THE ADVERTISED PROPOSAL OPEN DATE AND TIME BY THE FINANCE DEPARTMENT.

PROPOSAL INFORMATION SHEET

Company Name:	PRO PUMP SOLUTIONS OF AMERICA	
Proposer Address:	343 PHILLIPS DR. CLEVELAND, GA 30528	
Proposer Contact:	MIKE VENTRY	
Proposer Telephone Number:	706 633 4445	
Proposer Email Address:	MIKEV@PROPUMPSOLUTIONS.NET	
Addenda Acknowledgement *(Proposer shall insert number of each Addendum received):*	Addenda Numbers: ONE TWO	
Number of Years as a Supplier of a Pump of this Type:	8 YEARS	
Pump Model:	OC4X2-190/30P/C	
Equipment Price: *(Including manufacturing, materials, labor, delivery/freight, startup services, performance test, operator training, etc.)*		$64,505.80 US Dollars
Submittal Lead Time from Purchase Order:		5 Days
Equipment Lead Time from Approved Submittal:		56 Days
Refunds/discounts to the City in the event the proposed lead times are exceeded		$/Day
Travel/site time included for manufacturer's representative services (such as pump startup):		1/1 Trips/days

CITY OF FLOWERY BRANCH

ADDENDUM ACKNOWLEDGEMENT

BID 26-003

WHITE HORSE CREEK LIFT STATION REHABILITAION

PLEASE LIST ISSUED ADDENDUM(S)

Addendum Number(s)

ADDENDUM ONE

ADDENDUM TWO

☐ **NO ADDENDA WERE RECEIVED**

COMPANY NAME: PRO PUMP SOLUTIONS OF AMERICA, LLC.

CONTACT PERSON: MIKE VENTRY

ADDRESS: 343 PHILLIPS DR.

CITY: CLEVELAND **STATE:** GA **ZIP:** 30528

PHONE: ~~FAX:~~ 706-633 4445

EMAIL ADDRESS: MIKEV@PROPUMPSOLUTIONS.NET

By signing below, I hereby acknowledge receipt of the supplement pertaining to the above referenced bid.

SIGNATURE: [signature] **DATE:** 1/9/26

UPON RECEIPT, PLEASE PRINT AND ADD TO YOUR PROPOSAL.

City of Flowery Branch
PROPOSAL CERTIFICATION
RFP No. 26-003 White Horse Creek Lift Station Rehabilitation

This form must be completed and signed for the proposal to be considered.

With my signature, I certify that I am authorized to commit my firm to the proposal and that the information herein is valid for 60 days from this date. I further certify that all information presented herein is accurate and complete and that the scope of work can be performed as presented in this proposal upon the City's request.

Postal Return and/or Courier Delivery Address:

City of Flowery Branch
Finance Department
5410 Pine Street Flowery Branch, GA 30542

PROPOSAL RESPONSE:

PRICE: $ 64,505.80 **SEE PAGE 16**

Please attach specific pricing details that itemize costs by task, including contractor staff time and hourly rates, and other direct costs (materials, supplies, etc.). (In the event of discrepancies between the specific pricing details and this page, this page will be deemed to convey the contractor's accurate proposal.)

Having read and responded to all attached specifications, the undersigned offers the above quoted prices, terms, and conditions.

Signed, sealed, and delivered in the presence of:

Unofficial Witness

Maddison Hart
NOTARY
PUBLIC
White County, Georgia

Notary Public
Commission Expires: 7/15/28

By: _____
(Person authorized to sign binding contract)

Title: CFO

Attest: _____
(Officer of Company if Corporation)

Title: _____

Company Name: PRO PUMP SOLUTIONS OF AMERICA, LLC

Pro Pump Solutions of America, LLC

QUOTE

By: Mike Ventry
(706) 633-4445

Est # 2600017

TO: FLOWERY BRANCH, CITY OF
PO BOX 757
FLOWERY BRANCH, GA 30542
USA

Attn: Peter Woerner
E-Mail: peter.woerner@flowerybranchga.org
Phone: 706-982-0751

SHIP TO: FLOWERY BRANCH, CITY OF
6334 Spring Cove Drive
White Horse Creek LS Upgrades
FLOWERY BRANCH, GA 30542
USA

Attn: Peter Woerner

Quote No.	Date	Cust No	Your Referenced Inquiry	Delivery Promise	F.O.B.	Expiration
2600017	1/9/2026	000096		6 - 8 weeks, ARO		30 DAYS

Item	Quantity	UM	Part	Description	Price $	Extension $
001	2	EA	OC4X2-190/30PU	SS Handle, 50' power & sensor cable	26,326.42	52,652.84
002	2	EA	BPIUG-24-3R	GUIDE CLAW 4" Flange, Grommeted 4", 3" Guide Pipes	1,221.43	2,442.86
003	2	EA	A471	GROMMET 4"-BARNEYS	65.00	130.00
004	2	EA	PMR5	Relay, leakage HOMA	582.05	1,164.10
005	2	EA	ATS480D62Y	SqD soft Starter Replacement	2,933.00	5,866.00
007	1	HR	FIELD SERVICE	Start-up Soft Starters, PMR5 Sensor Relays,Tech & Truck, Start-up	1,750.00	1,750.00
800	1		FREIGHT	FREIGHT CHARGES	500.00	500.00

****TAXES MAY NOT BE INCLUDED IF APPLICABLE**

Total for Quote $ 64,505.80

Pro Pump Solutions of America, LLC. honors all standard manufacturer's warranty on parts. Please Note: the scope of work represents the complete description of all the work to be performed. Any additional service work required to complete the job and not covered in the scope of work, will be quoted and must be approved before completion.

TAXES, Pickup, Delivery, Desitination and/or Installation fee may not be covered in this estimate.

****Per above** you WILL be charged on your final invoice for any of the above if applicable. Non Negotiable**

Any equipment/pump(s) left over 90 days must be picked up if not in process of repairing.

THANK YOU FOR YOUR BUSINESS!

****Ending Invoice** Total Invoice will be due within 30 days of invoice date. All amounts remaining unpaid by the Client after the agreed terms date shall accrue interest at a rate of 4% per month. This interest shall continue to accrue every 30 days until the outstanding balance, including all accrued interest, is paid in full. If your entity holds any percentage, it has to be approved by PPS before check is mailed.**

LEGAL DISCLAIMER: This document is intended to be used by the business or entity named on the document. This document and the complete contents of such, are strictly confidential and privileged and propietary between Pro Pump Solutions, Inc. and the business, government agency, individual or association that it is issued to, on whole or part. It is strictly forbidden to copy, share, forward or make use any data that is found in this document. THANK YOU.

Page: 1

Technical Information

OC4X2-190/30P/C

HOMA PUMPEN MIT SYSTEM

Operating data	
Flow	175 US g.p.m.
Head	195 ft
Shaft power P2	19.3 hp
Pump efficiency	43.9 %
Required pump NPSH	
Pump type	Single pump
No. of pumps	1
Fluid	Water, clean

Pump	
Pump Code	OC4X2-190/30P/C
Impeller	Vane impeller with cutter sys.
Impeller size	190 mm
Solid size	
Discharge port	4" ANSI
Suction port	DN100

Motor	
Rated voltage	230/460 V
Frequency	60
Rated power P2	30.0 hp
Rated speed	3450 rpm
Number of poles	2
Efficiency	90 %
Rated current	70 / 35 A
Degree of protection	IP 68

Testnorm P2>10kW, HI Standard Grade 2B
P2<10kW, HI Standard Sect. 11.6.5.4

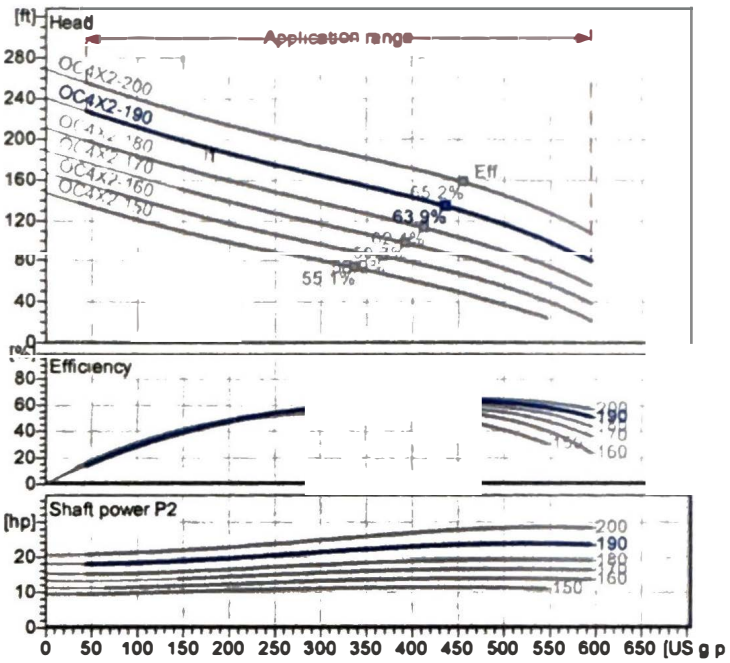

Wet well installation with coupling kit (P, 150...200)
Dimensions in mm [inch], letters see table

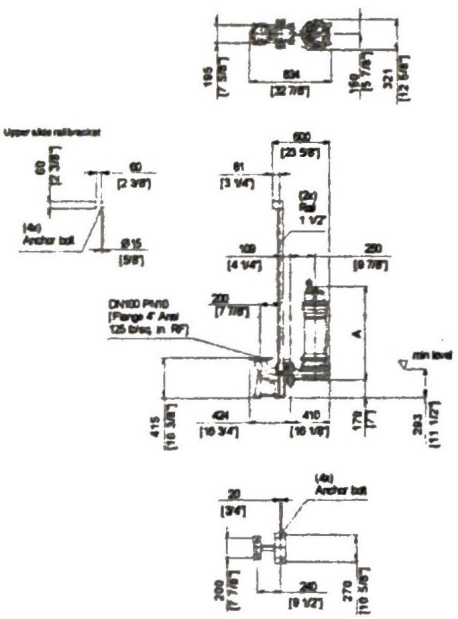

Materials	
Motor housing	Cast Iron ASTM A48,Cl.40B
Pump housing	Cast Iron ASTM A48,Cl.40B
Impeller	Hard cast iron ASTM A532 IIIA, 60HRC
Wear plate/Insert	Hard cast iron ASTM A532 IIIA, 60HRC
Suction cover	Cast Iron ASTM A48,Cl.40B
Motor shaft	AISI 430 F Stainless Steel
Bolts	AISI 304 Stainless Steel
Elastomers	Nitrile Rubber

Mechanical seal on motor side	SiC / SiC
Mechanical seal on medium side	SiC / SiC
Lower Bearing	Two angular ball bearings
Upper Bearing	Deep Groove Ball Bearing

Table Dimensions (mm)

A	887

2.0.1 - 09.01.2024 (Build 147)

Project | Project no.: | Created by:

Page:	Date:
1	12/1/2025

Performance Curve

OC4X2-190/30P/C

HOMA PUMPEN MIT SYSTEM

Impeller

Impeller type:	Solid size Ø:	Max. Ø:	Min. Ø:	Sel. Ø:	
Vane impeller with cutter sys.		200 mm	150 mm	190 mm	

Operating data

Speed:	Frequency:	Duty point:	Shaft power P2:	Discharge port:
3450 rpm	**60 Hz**	**Q =175 US g.p.m. H =195 ft**	**19.3 hp**	**4" ANSI**

Power data referred to:
Water, clean [100%] ; 68°F; 62.322lb/ft³; 1.0818E-5ft²/s

Testnorm: **P2>10kW, HI Standard Grade 2B**
P2<10kW, HI Standard Sect. 11.6.5.4

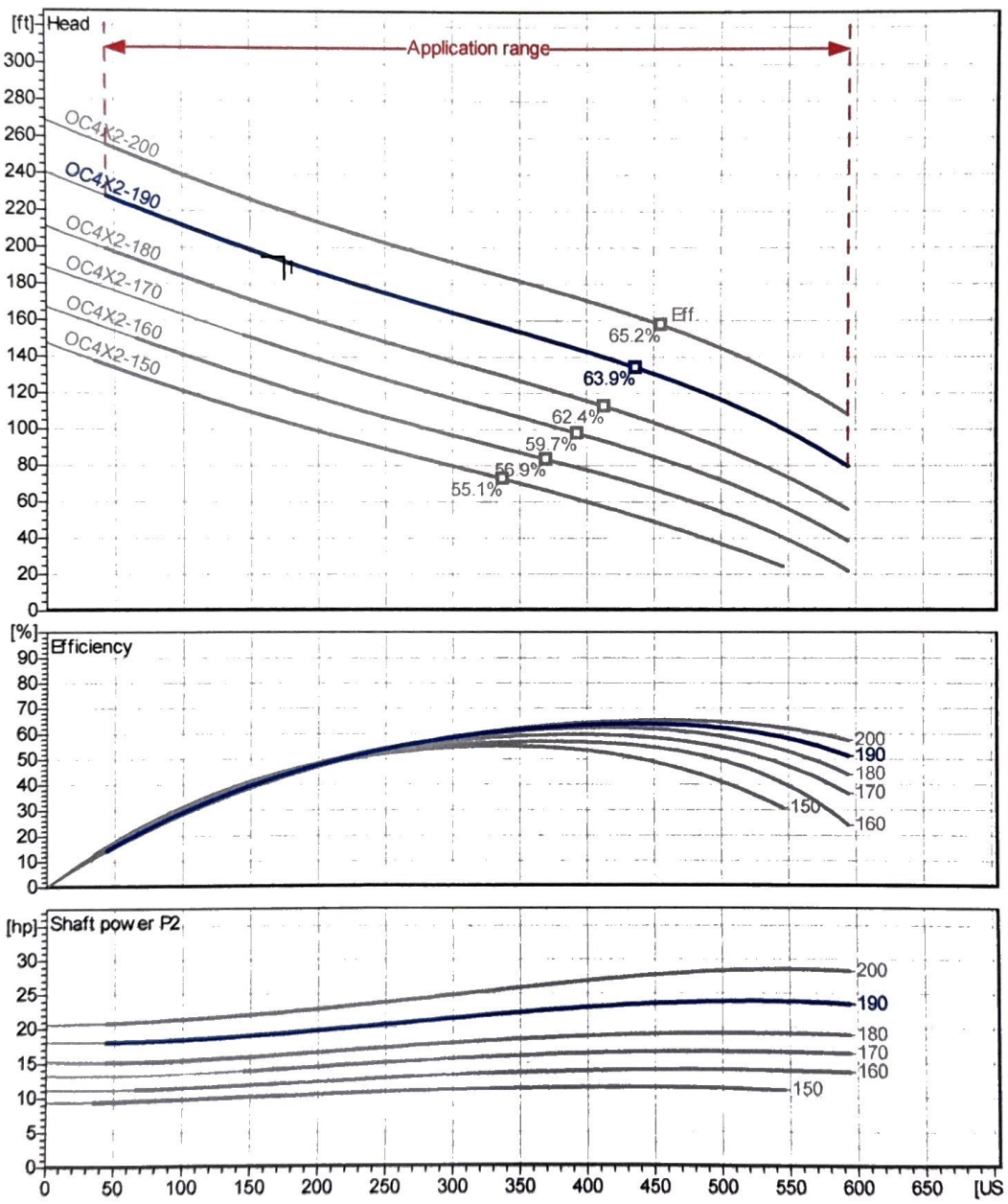

2.0.1 - 09.01.2024 (Build 147)

Project	Project no.:	Created by:	Page:	Date:
			2	12/1/2025

Dimensions

OC4X2-190/30P/C

Wet well installation with coupling kit (P. 150.. 200)
Dimensions in mm [inch], letters see table

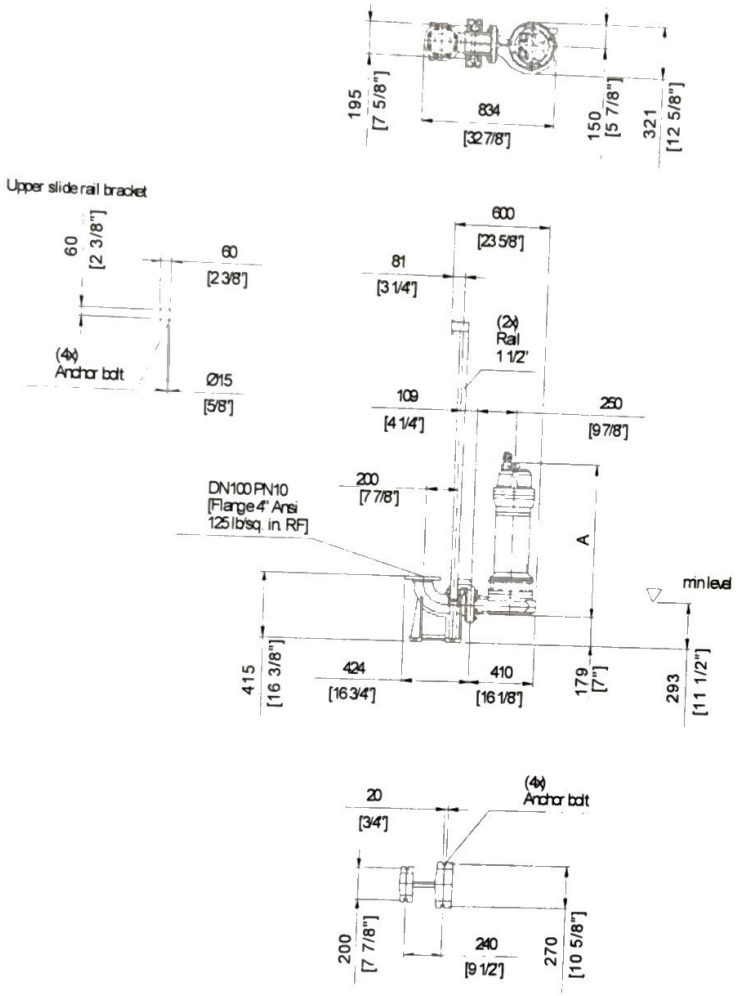

Table Dimensions (mm)

A	887

min level = Minimum fluid level for intermittent operation (S3)

2.0.1 - 09.01.2024 (Build 147)

Project	Project no.:	Created by:	Page: 3	Date: 12/1/2025

Technical Data

OC4X2-190/30P/C

HOMA PUMPEN MIT SYSTEM

Operating data					
Flow	**175 US g.p.m.**		**Head**	**195 ft**	**ft**
Shaft power P2	**19.3**	**hp**	**Static head**	**0**	**ft**
Pump efficiency	**43.9**	**%**	**Required pump NPSH**		**ft**
Pump type	Single pump		No. of pumps	1	
Fluid	Water, clean		Temperature	68	°F
Density	62.32	lb/ft³	Kin. viscosity	1.082E-5	ft²/s

Pump					
Pump Code	OC4X2-190/30P/C		Speed	3450	rpm
Suction port	DN100		Head Max.	227.8	ft
Discharge port	4" ANSI		Head Min.	79.7	ft
Impeller type	Vane impeller with cutter sys.		Flow Max.	594.4	US g.p.m.
Solid size		mm	Pump efficiency max.	63.9	%
Impeller Ø	190	mm	Required rated power max. P2	23.9	hp

Motor					
Motor design	Submersible motor		Insulation class	H	
Motor name	AM204 34P/2/3		Degree of protection	IP 68	
Frequency	60	Hz	Temperature class	T3C	
Rated power P2	30.0	hp	NEMA code	J	
			Explosion protection		
Rated speed	3450	rpm	Efficiency at % rated power 100%	90.0	%
Rated voltage	230 / 460 V | 3~		Efficiency at % rated power 75%	90.0	%
Rated current	70.0 / 35	A	Efficiency at % rated power 50%	90.0	%
Starting current, direct starting	569.8 / 285	A	cos phi at % rated power 100%	0.89	
Starting current, star-delta	1(	A	cos phi at % rated power 75%	0.85	
Starting mode	Directly		cos phi at % rated power 50%	0.77	
Power cable	4AWG-4+14AWG-4		Control cable		
Type of power cable	RHW-2		Type of control cable		
Cable length	32.8 ft		Service factor	1.15	
Shaft seal	Mechanical seal on motor side		SiC / SiC		
	Mechanical seal on medium side		SiC / SiC		
Bearing	Lower Bearing		Two angular ball bearings		
	Upper Bearing		Deep Groove Ball Bearing		
Remarks					

Materials / Weight			
Motor housing	Cast Iron ASTM A48;Cl.40B	Motor shaft	AISI 430 F Stainless Steel
Pump housing	Cast Iron ASTM A48;Cl.40B	Bolts	AISI 304 Stainless Steel
Impeller	Hard cast iron ASTM A532 IIIA, 60HRC	Elastomers	Nitrile Rubber
Wear plate with cutter	Hard cast iron ASTM A532 IIIA, 60HRC		
Suction cover	Cast Iron ASTM A48;Cl.40B		
Weight aggregate	436.51 lb		

2.0.1 - 09.01.2024 (Build 147)

Project	Project no.:	Created by:	Page:	Date:
			4	12/1/2025

HOMA®
PUMP TECHNOLOGY

Warranty

FIVE YEAR PRO-RATED MUNICIPAL PUMP WARRANTY
A Series PUMPS STANDARD & EXPLOSION PROOF
PERMANENT TYPE INSTALLATION*

Homa Pump Technology warrants the above referenced pumps ("Products") to be free from defects in workmanship and materials as follows:

If used in a permanent municipal application, the warranty period shall expire five (5) years from date of initial installation. If start up does not occur within six (6) months after date of shipment from Manufacturer, the warranty period shall expire five (5) years after the date of shipment from Manufacturer. This warranty is contingent upon purchaser's or end user's payment of the applicable percentage of the list price (list price minus covered %) of the following parts in effect at time of replacement.

WARRANTY COVERAGE

	Months 0-18	Months 19-31	Months 32-45	Months 46-60
Percentage	100%	75%	50%	25%

*If used in any non-municipal application, the warranty period shall expire on the earliest of the below dates:

i) one (1) year from date of installation of the Products; or

ii) eighteen (18) months from date of shipment of the Products from Manufacturer.

Products or parts thereof that are replaced or repaired under warranty during the original warranty period, shall be covered under this warranty until the expiration of the original warranty period or ninety (90) days from the date of such replacement or repair, whichever is later. In any event, such extended warranty period shall not exceed ninety (90) days after the expiration of the original warranty period.

The warranties stated above are contingent upon start-up of the equipment on site by an authorized Manufacturer's representative, as verified by receipt of start-up reports completed and signed by an authorized Manufacturer's representative. (For all "P" and larger Motors the report must be on file at Homa PTI).

If during the warranty period, any Products fail to meet the requirements set out in this warranty, the purchaser or end user shall give written notification to Manufacturer stating the reasons therefor. Upon receipt of prior written authorization from Manufacturer, Products shall be transported to Manufacturer's authorized service center, prepaid, at purchaser or end-user's cost. Manufacturer's sole obligation shall be to repair, modify or replace Products or parts thereof, at Manufacturer's sole option. Products repaired under this warranty will be returned with freight prepaid. Products must be repaired by an authorized Manufacturer repair center for warranty coverage to be considered. All warranty repairs will be done with OEM parts, use of Non-OEM parts is not authorized.

All protection features (such as moisture sensors, bearing monitors, and thermal overloads) incorporated in the Products must be connected and operable for warranty coverage. Proof of monitoring must be provided upon request.

This warranty shall not apply to any Products or parts thereof which have been (i) subjected to misuse, misapplication, accident, alteration, neglect, failure to act in a timely manner to address alarms/warnings, or physical damage; (ii) installed, operated, and/or maintained in a manner which is contrary to Manufacturer's written instructions as it pertains to installation, operation and maintenance of the Products, including but without limitation to being operated without being connected to monitoring devices supplied with specific products for protection; (iii) used in an application or for pumping liquids other than the use for which it is intended as specified in Manufacturer's product literature; (iv) damaged due to a defective power supply, improper electrical protection, faulty repair, ordinary wear and tear, corrosion, erosion or chemical attack, an act of God, an act of war or by an act of terrorism, (v) damaged resulting from the use of accessory equipment not sold by Manufacturer or not approved by Manufacturer for use in connection with Manufacturer's products, or (vi) repaired or altered without Manufacturer's written consent.

This warranty does not cover costs for standard and/or scheduled maintenance that is performed, nor does it cover Manufacturer's parts that, by virtue of their operation, require replacement through normal wear (aka Wear Parts), unless a defect in material or workmanship is determined by Manufacturer. Wear Parts are defined as cutters, cutting plates, impellers, diffusers, wear rings (stationary or rotating), volutes (when used in an abrasive environment), oil, grease, cooling fluids and/or any items deemed necessary to perform and meet the requirements of normal maintenance on all Manufacturer equipment.

Manufacturer shall not be liable for any special, indirect, consequential, or punitive damages, or profit loss of any kind. Major components not manufactured by the Manufacturer are covered by the original manufacturer's warranty in lieu of this warranty. In addition to any other special, indirect or consequential damages referenced above, Manufacturer shall not be responsible for travel expenses, rented (replacement) equipment, pump removal fees, installation fees, outside contractor's fees, or unauthorized repair shop expenses.

This warranty shall extend only to the initial end user.

ALL OTHER WARRANTIES, CONDITIONS AND REPRESENTATIONS, EXPRESSED OR IMPLIED BY STATUTE, COMMON LAW OR OTHERWISE, IN RELATION TO THE SUPPLY OF THE PRODUCTS INCLUDING BUT NOT LIMITED TO THE IMPLIED WARRANTIES OF MERCHANTABILITY AND FITNESS FOR A PARTICULAR PURPOSE ARE EXCLUDED TO THE EXTENT PERMITTED BY LAW.

*This warranty is applicable to Products supplied by Homa Pump Technology, unless specifically indicated otherwise in writing by Manufacturer.

Rev 9/24/2020

Pro Pump Solutions of America, LLC

343 PHILLIPS DRIVE
CLEVELAND, GA. 30528
678-454-1030

HOMA Pump Station References

City of Calhoun
17 – 18 Lift Stations (multiple size HOMA units)
Contact: Mark Burchett mburchett@calnet-ga.net
706-280-1623

City of Jasper
6 – 7 Lift Stations (multiple size HOMA units)
Contact: Charles Jones cjones@jasper-ga.us
770-893-7749

City of Chatsworth
5 – 6 Lift Stations (Converted Flygt to HOMA)
Contact: Kenny Loggins kennyl@chatsworthwater.com
706-671-0301

White Horse Creek Lift Station Rehabilitation Evaluation Form

Respondent (Company Name): Cornerstone H20

A. Non-Price Factors — 40 Points Total

#	Criterion	Max Points	Score	Comment
1	Expected performance based on pump HP and efficiency at design point	4	1	20% Efficiency
2	Ability to accommodate future design points with alternate impellers	4	4	Flow at 175 gpm
3	Expected reliability based on manufacturer experience and references	4	4	
4	Quality of materials of construction	4	4	
5	Proposed equipment delivery / lead times	4	3	1 week submittal, 5-7 weeks equipment
6	Proposed equipment layout	4	4	
7	Expected maintenance requirements	4	4	
8	Quality of manufacturer's warranty	4	4	
9	Terms and conditions of the manufacturer's purchase agreement	4	4	
10	Proposal responsiveness – completeness, organization and clarity	4	4	

Subtotal – Non-Price Factors (40 max): 36

White Horse Creek Lift Station Rehabilitation Evaluation Form

B. Price Factors — 60 Points Total

#	Criterion	Max Points	Score	Comment
1	Total equipment cost	30	5	$112,000
2	Suitability for existing site (preference will be given to proposals requiring minimal demolition/modification)	30	30	

Subtotal – Price Factors (60 max): 35

Total Score (100 max): 71

General Engineer Comments

1. $112k*, ~175 gpm, ~20% eff
Though price isn't everything, I don't see much to justify the very high price of the Ebara/Cornerstone.

2. The fee submitted by Cornerstone is high, but I remember the Ebara pumps being very good. The pumps seem to be designed to handle a much larger flow.

Max Points	*Proposed Fee*
30	*1 - 20K*
25	*20,001 - 40k*
20	*40,001 - 60k*
15	*60,001 - 80k*
10	*80,001 - 100k*
5	*100,001 - 120k*

The price-scoring tiers are based on the project's approved budget. The structure prioritizes proposals within the budget and provides a clear, consistent, and transparent method for evaluating cost.

EBARA

Customer : CORNERSTONE H20
Reference : White Horse Creek LS Rehab

Cornerstone
$112,000.00
20% Eff.

Pump Performance Curve

Ebara Quotation System 25.5.0

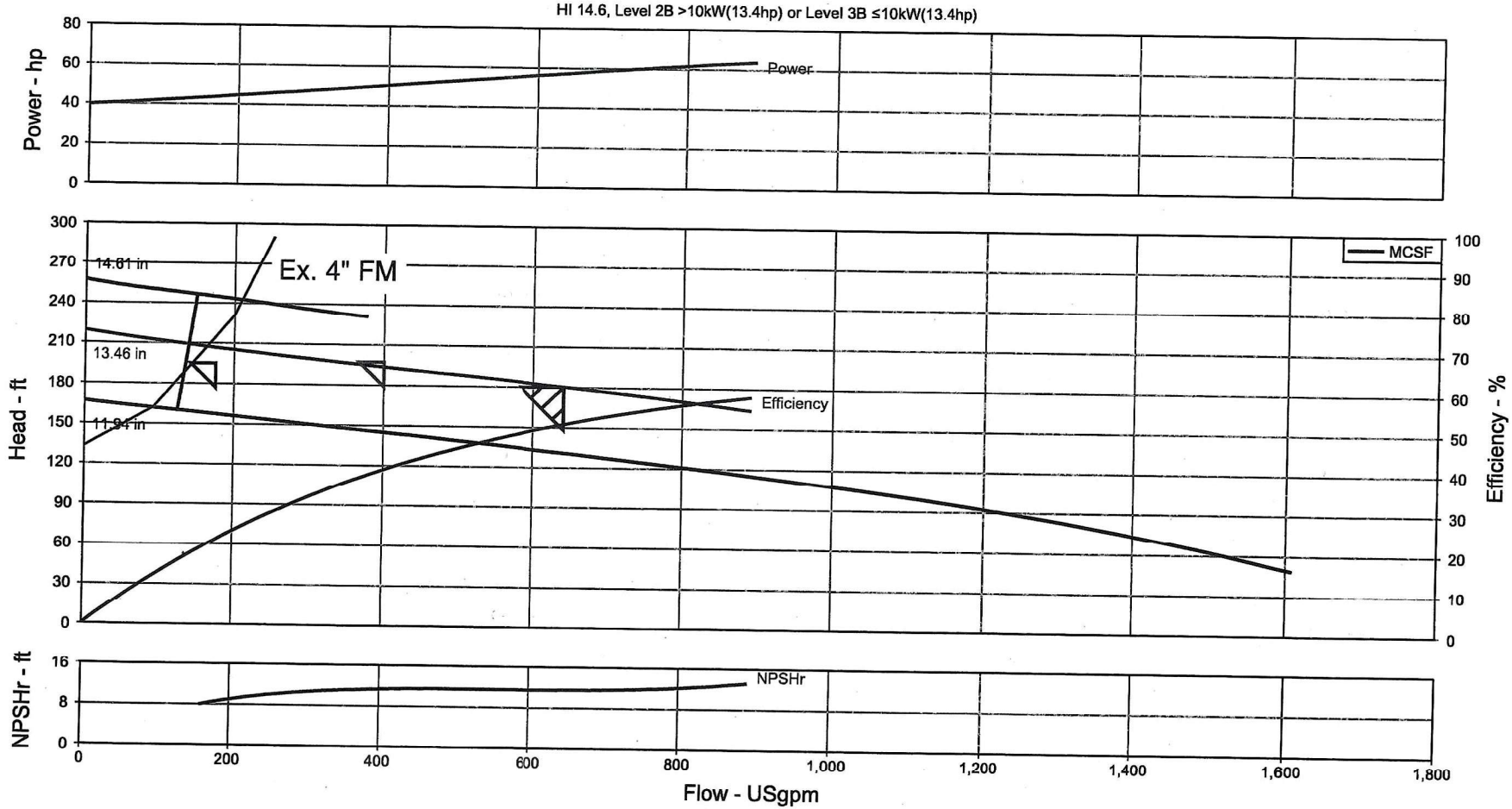

Item number	: 100DKEU
Service	:
Quantity	: 1
Quote number	: 121204-crw - White Horse Creek LS
Date last saved	: 04 Dec 2025 7:34 AM

Product Description	: 100DKEU4645
Stages	: 1
Speed, rated	: 1780 rpm
Based on curve number	: 100DKEXU4645
Efficiency	: 50.77 %
Power, rated	: 57.36 hp

Flow, rated	: 640.0 USgpm
Differential head / pressure, rated	: 180.0 ft
NPSH required	: 11.49 ft
Fluid density, rated / max	: 1.000 / 1.000 SG
Viscosity	: 1.12 cP
Cq/Ch/Ce/Cn [ANSI/HI 9.6.7-2010]	: 1.00 / 1.00 / 1.00 / 1.00

Cornerstone (Ebara):
- $112,000
- 20% Eff.

Ebara Pumps Americas Corporation
1651 Cedar Line Dr, Rock Hill, South Carolina 29730 USA
Tel: (803) 327-5005 Fax: (803) 327-5097 www.pumpsebara.com

White Horse Creek Lift Station Rehabilitation Evaluation Form

Respondent (Company Name): Goforth Williamson Inc. (GWI)

A. Non-Price Factors — 40 Points Total

#	Criterion	Max Points	Score	Comment
1	Expected performance based on pump HP and efficiency at design point	4	1	29% Efficiency
2	Ability to accommodate future design points with alternate impellers	4	3	175 gpm needed only 160 presented
3	Expected reliability based on manufacturer experience and references	4	4	
4	Quality of materials of construction	4	4	
5	Proposed equipment delivery / lead times	4	4	5 days Submittal 5-25 working days if not instock
6	Proposed equipment layout	4	4	
7	Expected maintenance requirements	4	4	
8	Quality of manufacturer's warranty	4	4	
9	Terms and conditions of the manufacturer's purchase agreement	4	4	
10	Proposal responsiveness – completeness, organization and clarity	4	4	

Subtotal – Non-Price Factors (40 max): 36

White Horse Creek Lift Station Rehabilitation Evaluation Form

B. Price Factors — 60 Points Total

#	Criterion	Max Points	Score	Comment
1	Total equipment cost	30	20	$47,045
2	Suitability for existing site (preference will be given to proposals requiring minimal demolition/modification)	30	25	Good quality soft starters were presented but seemed to be different brand than current soft starters that could require additional control panel modifications.

Subtotal – Price Factors (60 max): 45

Total Score (100 max): 81

General Engineer Comments

1. $47k*, ~160 gpm, ~29% eff

2. Obviously the Goforth submittal was well put together and the cheapest. At first glance, it appears that the other pumps are more efficient, however, it seems like it may be better suited for our design point. Impeller is good for large solids and debris, but is probably the reason it is a little more inefficient.

Max Points	*Proposed Fee*
30	*1 - 20K*
25	*20,001 - 40k*
20	*40,001 - 60k*
15	*60,001 - 80k*
10	*80,001 - 100k*
5	*100,001 - 120k*

The price-scoring tiers are based on the project's approved budget. The structure prioritizes proposals within the budget and provides a clear, consistent, and transparent method for evaluating cost.

GWI (Grundfos) -$47,045.00

29% Eff.

Grundfos

Submittal Data

PROJECT:	UNIT TAG:	QUANTITY:
REPRESENTATIVE:	TYPE OF SERVICE:	
ENGINEER:	SUBMITTED BY:	DATE:
CONTRACTOR:	APPROVED BY:	DATE:
	ORDER NO.:	DATE:

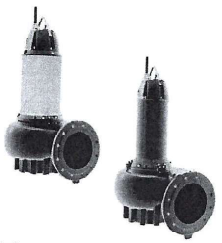

Note! Product picture may differ from actual product

SEV.30.A30.335.2.52H.EX.61R.A

Submersible and dry-installed Grundfos SE/SL sewage pumps (9-30 kW) are fitted with either S-tube® (SE/SE1/SE2 and SL/SL1/SL2) or SuperVortex impeller (SLV). The free passage through the pump varies from 35-125 mm depending on size and hydraulic variant.

33.5 HP

Conditions of Service	
Flow:	178 US GPM
Head:	201.6 ft
Efficiency:	29.8 %
Temperature:	68 °F
NPSH required:	13.89 ft
Specific Gravity:	1.000

Pump Data	
Liquid temperature range:	50 .. 104 °F
Maximum ambient temperature:	104 °F
Flange standard:	ANSI
Product number:	99790990

Motor Data	
Mains frequency:	60 Hz
Enclosure class:	IP68
Motor protection:	KLIXON
Eta 1/1:	89 %

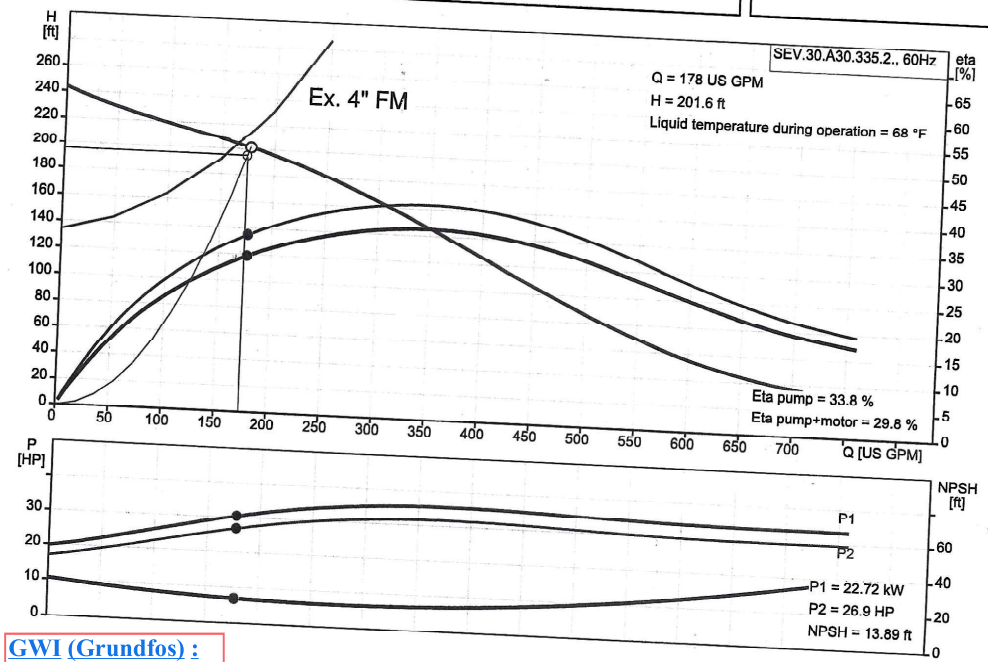

GWI (Grundfos) :
- $47,045.00
- 29% Eff.
- 33.5 HP

1

White Horse Creek Lift Station Rehabilitation Evaluation Form

Respondent (Company Name): Pro Pump Solutions of America, LLC

A. Non-Price Factors — 40 Points Total

#	Criterion	Max Points	Score	Comment
1	Expected performance based on pump HP and efficiency at design point	4	4	46% Efficiency
2	Ability to accommodate future design points with alternate impellers	4	4	Flow At 175 gpm
3	Expected reliability based on manufacturer experience and references	4	4	
4	Quality of materials of construction	4	4	
5	Proposed equipment delivery / lead times	4	3	5 days Submittal, 56 days equipment
6	Proposed equipment layout	4	4	
7	Expected maintenance requirements	4	4	
8	Quality of manufacturer's warranty	4	4	
9	Terms and conditions of the manufacturer's purchase agreement	4	4	
10	Proposal responsiveness – completeness, organization and clarity	4	2	Submittal was organized but poorly assembled.

Subtotal – Non-Price Factors (40 max): 37

White Horse Creek Lift Station Rehabilitation Evaluation Form

B. Price Factors — 60 Points Total

#	Criterion	Max Points	Score	Comment
1	Total equipment cost	30	15	$64,505.80
2	Suitability for existing site (preference will be given to proposals requiring minimal demolition/modification)	30	30	

Subtotal – Price Factors (60 max): 45

Total Score (100 max): 82

General Engineer Comments

1. $64.5k*, 175 gpm, ~46% eff - Comparing the efficiencies of the three, the Homa appears to be the most efficient.

2. Pro Solutions submittal was not put together very well at all. Some of the info on the pump curves are hard to read. Price is in the middle of the road but may be the best pump for the job. I don't know anything about HOMA Pumps though. Impeller is best if there has been a lot of clogging or is a high amount of debris in the effluent, especially rags, etc.

Max Points	*Proposed Fee*
30	*1 - 20K*
25	*20,001 - 40k*
20	*40,001 - 60k*
15	*60,001 - 80k*
10	*80,001 - 100k*
5	*100,001 - 120k*

The price-scoring tiers are based on the project's approved budget. The structure prioritizes proposals within the budget and provides a clear, consistent, and transparent method for evaluating cost.

Performance Curve

OC4X2-190/30P/C

★ Pro Pump - $64,505.80

40% Eff

HOMA PUMPEN MIT SYSTEM

Pro Pump (HOMA):
- $64,505.80
- 40% Eff.
- "30 HP" pump

Impeller

Impeller type	Solid size Ø:	Max. Ø:	Min. Ø:	Sel. Ø:
Vane impeller with cutter sys.		200 mm	150 mm	190 mm

Operating data

Speed	Frequency	Duty point	Shaft power P2:	Discharge port:
3450 rpm	60 Hz	Q =175 US g.p.m. H =195 ft	19.3 hp	4" ANSI

Power data referred to:
Water, clean [100%] ; 68°F, 62.322lb/ft³, 1.0818E-5ft²/s

"30 HP" pump

Testnorm: P2>10kW, HI Standard Grade 2B
P2<10kW, HI Standard Sect. 11.6.5.4

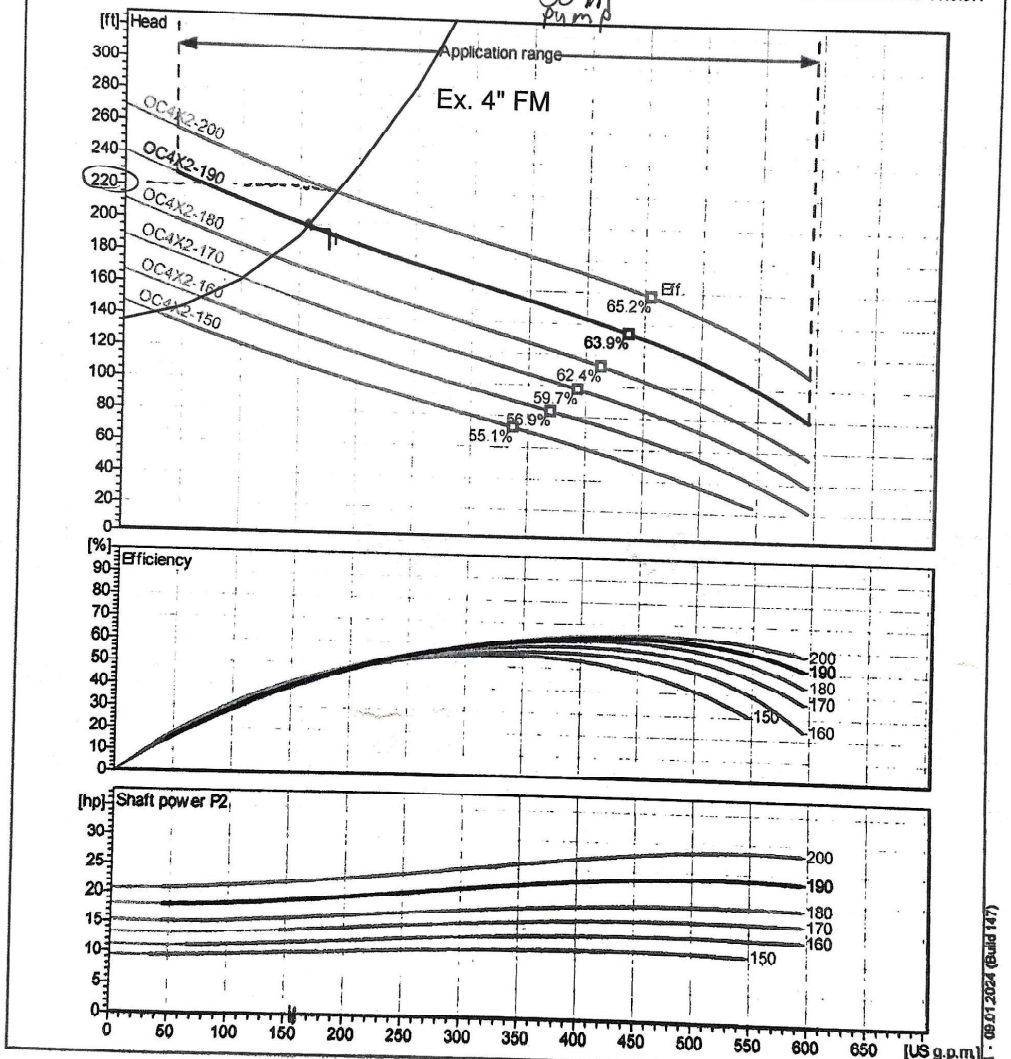

2.0.1 - 09.01.2024 (Build 147)

Project	Project no.:	Created by:	Page:	Date:
			2	12/1/2025

CITY OF FLOWERY BRANCH CITY COUNCIL

EXECUTIVE SUMMARY

SUBJECT: Consideration of executing the construction contract with Sol Construction, LLC for the Groundwater Wells #4 & #5 Reactivation Project, in the total contract amount of $3,324,130.00, to be funded through a combination of a GEFA loan and Water and Sewer Fund reserves to supplement the City's drinking water supply.

DATE: **April 16, 2026**

COUNCIL ACTION REQUESTED ON: **April 16, 2026**

BUDGET INFORMATION:
The project will be funded through a GEFA loan ($1,773,855) and Water and Sewer Fund reserves ($1,550,275) for a total project cost of $3,324,130.00.

PURPOSE:
To authorize execution of the construction contract for the Groundwater Wells #4 & #5 Reactivation Project.

HISTORY:
The City owns two inactive groundwater wells (Wells #4 & #5) located on City-owned property at the corner of Atlanta Highway and Vireo Drive, which were acquired from the State of Georgia for the purpose of reactivating them to supplement the City's drinking water supply. The City engaged ESG Engineering, Inc. to design and permit the work necessary to reactivate the wells and integrate them into the City's water system. Bids were publicly advertised and opened on January 29, 2026, at which time Sol Construction, LLC was identified as the lowest responsive and responsible bidder. On February 19, 2026, City Council formally recognized Sol Construction, LLC as the lowest responsive, responsible bidder. Since that time, the construction contract documents have been finalized and compiled into the Conformed Set, which is now presented for Council's consideration.

FACTS & ISSUES:

- The construction contract and related documents have been finalized by ESG Engineering and Sol Construction, LLC.

- The Conformed Set reflects the bid amount previously recognized by Council and incorporates all applicable plans, specifications, and contractual requirements.
- Execution of the contract will allow issuance of the Notice to Proceed and commencement of construction.

OPTIONS:

1. Authorize execution of the construction contract with Sol Construction, LLC for the Groundwater Wells #4 & #5 Reactivation Project.
2. Do not authorize execution of the construction contract.

RECOMMENDED SAMPLE MOTION:

I move to authorize the Mayor to execute the construction contract with Sol Construction, LLC for the Groundwater Wells #4 & #5 Reactivation Project in the amount of $3,324,130.00, funded through a GEFA loan and Water and Sewer Fund reserves.

DEPARTMENT: Administration
PREPARED BY: Tonya Parrish, City Manager

ESG ENGINEERING

ESG Engineering
6400 Peake Rd
Macon, GA 31210
(P) 478-474-5025
www.esgengineering.com

GROUNDWATER WELLS #4 & #5

PREPARED FOR

EST 1874
FLOWERY BRANCH
Always Blooming!

THE CITY OF
FLOWERY BRANCH, GEORGIA

CONTRACT DOCUMENTS & TECHNICAL SPECIFICATIONS

GEORGIA REGISTERED No. PE046341 PROFESSIONAL ENGINEER ANDREW D SWICEGOOD

CONTRACT DOCUMENTS

AND

TECHNICAL SPECIFICATIONS

Groundwater Wells #4 & #5

FOR THE

CITY OF FLOWERY BRANCH

HALL COUNTY

ESG Engineering, LLC
6400 Peake Road
Macon, Georgia 31210

TABLE OF CONTENTS

CONTRACT DOCUMENTS

Advertisement for Bids	00100
Instructions to Bidders	00200
Immigration and Security Form	00210
Bid Form	00410
Bid Bond	00460
Qualifications of Bidders	00470
Certification of Nonsegregated Facilities	00480
Non-collusion Affidavit of Prime Bidder	00481
Agreement	00500
Performance Bond	00610
Payment Bond	00615
Notice of Award	00621
Notice to Proceed	00622
General Conditions	00700
Supplementary Conditions	00800
GEFA Supplemental Conditions	GEFA

TECHNICAL SPECIFICATIONS

Allowances	01020
Measurement and Payment	01025
Submittals	01300
Testing Services	01410
Temporary Sanitary Facilities	01516
Contract Closeout Procedures	01701
Periodic and Final Clean-Up	01710
Warranties and Bonds	01740
Earthwork and Site Grading	02200
Demolition	02220
Excavation, Trenching, and Backfill	02315
Rock Removal	02316
Soil Erosion Control	02370
Valve Box Adjustment	02512
Chemical Feed Building	02513
Well House Enclosures	02514
Sanitary Sewer Collection System	02530
Utility Directional Drilling	02540
Aggregate Base Course	02720
Asphalt Concrete	02740
Sidewalks, Driveways, and Curbs & Gutters	02775
Permanent Grassing	02920
Concrete Formwork	03100
Concrete Accessories	03150
Concrete Reinforcement	03200
Cast-in-Place Concrete	03300
Precast Structures	03480

Water Distribution System	11200
Valves and Appurtenances	15200
Chemical Feed System	70001
Well Rehabilitation	80001
Covered Steel Structure	90001
Submersible Well Pumps	432133
Geotechnical Engineering Report	Appendix A

CONTRACT DOCUMENTS

SECTION 00200
INSTRUCTIONS TO BIDDERS

INTENTION: It is intended that the Instructions to Bidders, General Conditions, Supplementary Conditions, Technical Specifications and Construction Drawings shall cover the complete work to which they relate.

ARTICLE 1 DEFINED TERMS: In addition to the terms defined in the General Conditions, (EJCDC 1910-8) (1996), additional terms used in these Instructions to Bidders have the meanings indicated below which are applicable to both the singular and plural thereof.

1.1 **Bidder** – One who submits a Bid directly to Owner as distinct from a sub-bidder, who submits a bid to a Bidder.

1.2 **Successful Bidder** – The lowest, responsible and responsive Bidder to whom Owner (on the basis of Owner's evaluation as hereinafter provided) makes an award.

1.3 **Bid** – A complete and properly signed offer to execute work for the prices stipulated in Bid Form and submitted in accordance with the Bidding Documents.

1.4 **Addenda** – Graphic or written documents issued by Engineer prior to the opening of Bids issued to clarify, revise, add to, or delete information in the original bidding documents or in previous addenda.

ARTICLE 2 BID FORM: All bids must be made upon the Bid Forms hereto annexed, and shall state the amount bid for each item shown, and all bids must be for materials and work called for in the specifications. **Deposits for plans and specifications are not refundable**.

2.1 The Bid Form is included with the Bidding Documents; additional copies may be obtained from Engineer.

2.2 All blanks on the Bid Form must be completed by printing in black ink or by typewriter.

2.3 Bids by corporations must be executed in the corporate name by the president or a vice-president (or other corporate officer accompanied by evidence of authority to sign) and the corporate seal must be affixed and attested by the secretary or an assistant secretary. The corporate address and state of incorporation must be shown below the signature.

2.4 All names must be typed or printed in black ink below the signature.

2.5 The Bid shall contain an acknowledgement of receipt of all Addenda (the numbers of which must be filled in on the Bid Form).

2.6 The address and telephone number for communications regarding the Bid must be shown.

ARTICLE 3 QUALIFICATIONS OF BIDDERS:

3.1 To demonstrate qualifications to perform the Work, each Bidder must submit within five (5) days after Bid opening upon Owner's request detailed written evidence such as financial data, previous experience, present commitments, and other such data as may be necessary to assist Owner in determining Contractor's qualifications.

3.2 Each Bid must contain evidence of Contractor's authority to conduct business in the state where the Work is to be performed. State Contractor license number, if applicable, must also be shown on the Bid Form.

ARTICLE 4 COPIES OF BIDDING DOCUMENTS:

4.1 Complete sets of Bidding Documents must be used in preparing Bids; neither Owner nor Engineer assumes any responsibility for errors or misinterpretations resulting from the use of incomplete sets of Bidding Documents.

4.2 Owner and Engineer in making copies of Bidding Documents available for a non-refundable deposit do so only for the purpose of obtaining Bids for the Work and do not confer a license or grant for any other use.

ARTICLE 5 EXAMINATION OF BIDDING DOCUMENTS, OTHER DATA, AND SITE:

5.1 It is the responsibility of each Bidder before submitting a bid:

5.1.1 To examine and study thoroughly the Bidding Documents and other related data identified in the Bidding Documents;

5.1.2 To visit the work site to ascertain by inspection pertinent location conditions such as location, character and accessibility of the site including existing surface and subsurface conditions in the work area; availability of facilities, location and character of existing work within or adjacent thereto, labor conditions, etc.

5.1.3 To become familiar with and satisfy Bidder as to all federal,

state, and local Laws and Regulations that may affect cost, progress, or performance of the Work;

5.1.4 To obtain and carefully study (or assume responsibility for doing so) all addition or supplementary examination investigations, explorations, tests, studies, and data concerning conditions (surface, subsurface, and underground facilities) at or contiguous to the Site which may affect cost, progress, or performance of the Work or which relate any aspect of the means, methods, techniques, sequences, and procedures of construction expressly required of the bidding documents, and safety precautions and programs incident thereto;

5.1.5 To study and carefully correlate Bidder's knowledge and observations with the Bidding Documents and such other related data; and

5.1.6 To promptly notify Engineer of all conflicts, errors, ambiguities or discrepancies which Bidder has discovered in or between the Biding Documents and such other related documents;

5.1.7 To agree at the time of submitting its Bid that no further examinations, investigations, explorations, tests, studies or data are necessary for the determination of its Bid for performance of the work at the price bid and within the times and in accordance with the other terms and conditions of the Bidding Documents;

5.1.8 To become aware of the general nature of the work to be performed by Owner and others at the Site that relates to the Work as indicated in the Bidding Documents;

5.1.9 To determine that the Bidding Documents are generally sufficient to indicate and convey understanding of all terms and conditions for the performance of the Work.

5.2 The Owner shall make available to all prospective bidders, previous to receipt of bids, information that it may have as to sub-soil conditions and surface topography at the work site. Such information shall be given as the best factual information available without being considered as a representation of the Owner.

5.3 The submission of a Bid will constitute an incontrovertible representation by

Bidder that Bidder has complied with every requirement of this Article 5, that without exception, the Bid is premised upon performing and furnishing the Work required by the Bidding Documents and applying any specific means, methods, techniques, sequences, and procedures of construction that may be shown or indicated or expressly required by the Bidding Documents, that Bidder has given Engineer written notice of all conflicts, errors, ambiguities, and discrepancies that Bidder has discovered in the Bidding Documents and the written resolutions thereof by Engineer are acceptable to Bidder, and that the Bidding Documents are generally sufficient to indicate and convey understanding of all terms and conditions for performing and furnishing the Work.

ARTICLE 6 PRE-BID CONFERENCE:

6.1 If owner elects to conduct a pre-bid conference, all plan holders will be notified via addendum.

ARTICLE 7 INTERPRETATIONS AND ADDENDA:

7.1 All questions about the meaning or intent of the Bidding Documents are to be directed to Engineer. The person submitting the request shall do so in writing and be responsible for its prompt delivery. Interpretations or clarifications considered necessary by Engineer in response to such questions will be issued by Addenda mailed or delivered to all parties recorded by Engineer as having received the bidding Documents. Questions received less than ten days prior to the date for opening of Bids may not be answered. Only questions answered by formal written Addenda will be binding. Oral and other interpretations or clarifications will be without legal effect.

7.2 Addenda may also be issued to modify the Bidding Documents as deemed advisable by Owner or Engineer.

ARTICLE 8 BID SECURITY:

8.1 All bid forms must be accompanied by a Bid Bond in an amount not less than five percent (5%) of the amount bid. The successful bidder, if awarded the Contract, will be required to furnish a Performance Bond and Payment Bond, each in the amount of one hundred percent (100%) of the Contract amount. All bonds must appear on the Treasury Department's most current Circular 570 Listing.

8.2 The Bid security of Successful Bidder will be retained until such Bidder has executed the Agreement, furnished the required contract security and met the other conditions of the Notice of Award, whereupon the Bid security will

be returned. If the Successful Bidder fails to execute and deliver the Agreement and furnish the required contract security within fifteen days after the Notice of Award, Owner may annul the Notice of Award and the Bid security of that Bidder will be forfeited. The Bid security of other Bidders whom Owner believes to have a reasonable chance of receiving the award may be retained by Owner until the earlier of the seventh day after the Effective Date of the Agreement or the sixty-first day after the Bid opening, whereupon Bid security furnished by such bidders will be returned. Bid security with Bids, which are not competitive, will be returned within seven days after the Bid opening.

ARTICLE 9 CONTRACT COMPLETION TIME: The number of days within which, or by which the Work is to be (a) Substantially Completed and (b) also completed and ready for final payment are set forth in the Agreement. Provisions for liquidated damages, if any, are set forth in the Agreement.

ARTICLE 10 SUBSTITUTES AND "OR EQUAL" TERMS:

10.1 The Contract, if awarded, will be on the basis of materials and equipment specified or described in the Bidding Documents, or those Substitute or "Equal" materials and equipment approved by Engineer. Materials and equipment described in the Bidding Documents establish a standard of required type, function and quality to be met by any proposed Substitute or "Equal" item.

10.2 No item of material or equipment will be considered by Engineer as a Substitute/ "or-equal" unless written request for approval has been submitted by Bidder and has been received by Engineer at least 15 days prior to the date for receipt of Bids. Each such request shall conform to the requirements of Paragraph 6.7.1 of the General Conditions. The burden of proof of the merit of the proposed item is upon Bidder. Engineer's decision of approval or disapproval to allow inclusion of a proposed item in the Bid will be final. Contractor shall refer to General Conditions (Paragraph 6.7.1), Supplementary Conditions (Section 5.0), and the Technical Specifications or further guidance on submittal procedure and approval requirements on substitutes or "or-equal" items.

ARTICLE 11 SUBCONTRACTORS, SUPPLIERS, AND OTHERS:

11.1 If the Supplementary Conditions require the identity of certain Subcontractors, Suppliers, individuals, or entities to be submitted to Owner in advance of a specified date prior to the Effective Date of the Agreement, the apparent Successful Bidder, and any other Bidder so requested, shall within five days after Bid opening, submit to owner a list of all such

Subcontractors, Suppliers, individuals, or entities proposed for those portions of the Work for which such identification is required. Such list shall be accompanied by an experience statement with pertinent information regarding similar projects and other evidence of qualification for each such Subcontractor, Supplier, individual, or entity if requested by Owner. If Owner or Engineer, after due investigation, has reasonable objection to any proposed Subcontractor, Supplier, individual, or entity, Owner may, before the Notice of Award is given, request apparent Successful Bidder to submit a substitute/ "or-equal",

11.2 If apparent Successful Bidder declines to make any such substitution/ "or-eqaul", Owner may award the Contract to the next lowest Bidder that proposes to use acceptable subcontractors, Suppliers, individuals, or entities. Declining to make requested substitutions would not constitute grounds for forfeiture of the bid security of any Bidder. Any Subcontractor, Supplier, individual, or entity so listed and against which Owner or Engineer makes no written objection prior to the giving of the Notice of Award will be deemed acceptable to Owner and Engineer subject to revocation of such acceptance after the Effective Date of the Agreement as provided in paragraph 6.06 of the General Conditions.

11.3 Contractor shall not be required to employ any Subcontractor, Supplier, individual, or entity against whom Contractor has reasonable objection.

ARTICLE 12 **SUBMITTAL OF BIDS**: Bids shall be submitted at the time and place indicated in the Advertisement for Bids and shall be enclosed in a sealed opaque envelope, marked with the project title, and name and address of Bidder, and accompanied by the Bid security and other required documents. If the Bid is sent through the mail or other delivery system, the sealed envelope shall be enclosed in a separate envelope with the notation "BID ENCLOSED" on the face of it.

Each Bidder is responsible for seeing that his Bid is received by the Owner not later than the advertised time set for the opening of Bids.

A. Additional documents required to be completed and included with the submission of each Bid include the following:

1. Section 00210 – Immigration and Security Form

2. Section 00470 – Qualifications of Bidder

3. Section 00480 – Certification of Non-Segregated Facilities

4. Section 00481 – Noncollusion Affidavit of Prime Bidder

5. Section 3 Business Concern, Previous Certificate of Compliance, and Action Plan*

*All contractors wishing to be identified as a Section 3 Business Concern must include a completed (as well as signed and notarized) Section 3 Business Concern, Previous Certificate of Compliance and Action Plan with their bid proposals. In reviewing the bid proposals, any contractors that are identified as qualified Section 3 Business Concerns should be reviewed and if legitimate, granted a Preference in contracting, all other things being equal.

ARTICLE 13 MODIFICATION AND WITHDRAWAL OF BIDS

13.1 Bids may be modified or withdrawn by an appropriate document duly executed (in the manner that a Bid must be executed) and delivered to the place where Bids are to be submitted at any time prior to the opening of bids.

13.2 If, within twenty-four hours after Bids are opened, any Bidder files a duly signed, written notice with Owner and promptly thereafter demonstrates to the reasonable satisfaction of owner that there was a material and substantial mistake in the preparation of its Bid, that Bidder may withdraw its Bid and the Bid security will be returned. Thereafter, that Bidder will be disqualified from further bidding on the Work to be provided.

ARTICLE 14 OPENING OF BIDS: Bids will be opened and (unless obviously non-responsive) read aloud publicly at the place where Bids are to be submitted. An abstract of the amount of the base Bids and major alternates (if any) will be made available to Bidders after the opening of Bids.

ARTICLE 15 ACCEPTANCE OF BIDS: Bids may not be withdrawn (except as noted in Paragraph 13) after the time set for the opening of Bids. Bids will remain subject to acceptance for sixty (60) days after the day of the Bid opening, but the Owner may, in its sole discretion, release any Bid and return the Bid security prior to expiration of the acceptance period.

ARTICLE 16 AWARD OF CONTRACT:

16.1 Owner reserves the right to reject any or all Bids, including without limitation, the rights to reject any or all nonconforming, nonresponsive, unbalanced or conditional Bids and to reject the Bid of any Bidder if Owner believes that it would not be in the best interest of the Project to make an award to that Bidder, whether because the Bid is not responsive, or the Bidder is unqualified or of doubtful financial ability or fails to meet any other pertinent

standard or criteria established by the Owner.

16.2 Owner also reserves the right to waive all informalities not involving price, time or changes in the Work and to negotiate contract terms with the Successful Bidder. Discrepancies between the multiplication of units of Work and unit prices will be resolved in favor of the unit prices. Discrepancies between the indicated sum of any column of figures and the correct sum thereof will be resolved in favor of the correct sum. Discrepancies between words and figures will be resolved in favor of the words.

16.3 In evaluating Bids, Owner will consider the qualification of Bidders, whether or not the Bids comply with the prescribed requirements, and such alternates, unit prices and other data, as may be requested in the Bid Form or prior to the Notice of Award.

The Owner will also consider whether the Bidder involved:

(a) Maintains a permanent place of business;

(b) Has adequate plant and equipment to do the work properly and expeditiously;

(c) Has suitable financial status to meet obligations incidental to the work;

(d) Has appropriate technical experience.

16.4 Owner may consider the qualifications and experience of Subcontractors, Suppliers, and other persons and organizations proposed for those portions of the Work as to which the identity of Subcontractors, Suppliers, and other persons and organizations must be submitted as provided in the Supplementary Conditions. Owner also may consider the operating costs, maintenance requirements, performance data and guarantees of major items of materials and equipment proposed for incorporation in the Work when such data is required to be submitted prior to the Notice of Award.

16.5 Owner may conduct such investigations as Owner deems necessary to assist in the evaluation of any bid and to establish the responsibility, qualifications and financial ability of Bidders, proposed Subcontractors, Suppliers and other persons and organizations to perform and furnish the Work in accordance with the Contract Documents to Owner's satisfaction within the prescribed time.

16.6 If the contract is to be awarded, it will be awarded to the Bidder whose evaluation by Owner indicates to Owner that the award will be in the best

interests of the Project.

16.7 If the contract is to be awarded, Owner will give Successful Bidder a Notice of Award within sixty (60) days after the day of the Bid opening.

ARTICLE 17 **MODIFICATIONS OF QUANTITIES**: If the lowest bona fide Bid exceeds the money available for the Work, the Owner reserves the right to delete enough of the Work to bring the cost within the available funds. The Owner also reserves the right to delete whichever items or portions of items he considers to be in the best interest of the Owner.

ARTICLE 18 **CONTRACT SECURITY**: The General Conditions and Supplementary Conditions set forth Owner's requirements as to performance and payment bonds. When the Successful Bidder delivers the executed Agreement to the Owner, it must be accompanied by the required performance and payment bonds.

ARTICLE 19 **SIGNING THE AGREEMENT**: When the Owner gives a Notice of Award to the Successful Bidder, it will be accompanied by the required number of unsigned counterparts of the Agreement with all other written Contract Documents attached. Within fifteen (15) days thereafter, Contractor shall sign and deliver the required counterparts of the Agreement and attached documents to Owner with the required Bonds. Within ten (10) days thereafter, Owner shall deliver one fully signed counterpart to the Contractor.

ARTICLE 20 **LAWS AND REGULATIONS**: The Contractor shall comply with local, District, County, State and Federal laws applicable to the work.

The Contractor shall comply with the Department of Labor Safety and Health Regulations for Construction promulgated under the Occupational Safety and Health Act of 1970 (PL 91-596) and under Section 107 of the Contract Work and Safety Standards Act (PL 91-54). The regulations are administered by the Department of Labor and the Contractor shall allow access to the project to personnel from that Department.

ARTICLE 21 **CONTRACTOR'S AND SUBCONTRACTOR'S INSURANCE**: Contractor shall not commence work under this contract until he has obtained all the insurance required by the Supplementary Conditions.

ARTICLE 22 **TERMINATION OF CONTRACT**: If the Owner is made to stop construction of the work because of an order from a Court or State Department, the contract shall be terminated. Payment will be made for work completed and a proration of the work underway, materials stored, and for the overhead and profit of the completed work and work underway. Payment will not be made for anticipated profit and overhead on work not completed or underway.

END OF SECTION

SECTION 00210
Immigration and Security Form

IMMIGRATION AND SECURITY FORM

THE SUCCESSFUL BIDDER MUST PROVIDE THE OWNER WITH THE PROPERLY COMPLETED AND PROPERLY SIGNED IMMIGRATION AND SECURITY FORMS AS REQUIRED BY GEORGIA SENATE BILL 529 "GEORGIA SECURITY AND IMMIGRATION COMPLIANCE ACT OF 2006" O.C.G.A. § 13-10-90 AND § 13-10 91

THIS FORM MUST BE COMPLETED BY ALL CONTRACTORS AND SUBCONTRACTORS

THE FORM ATTACHED HERETO.

IMMIGRATION AND SECURITY FORM

A. In order to insure compliance with the Immigration Reform and Control Act of 1986 (IRCA), Pub.L. 99-603 and the Georgia Security and Immigration Compliance Act O.C.G.A. § 13-10-90 et. seq., Contractor must initial one of the sections below:

_____ Contractor has 500 or more employees and Contractor warrants that Contractor has complied with the Immigration Reform and Control Act of 1986 (IRCA) Pub.L. 99-603 and the Georgia Security and Immigration Compliance Act by registering at https://www.vis-dhs.com/EmployerRegistration and verifying information of all new employees; and by executing any affidavits required by the rules and regulation issued by the Georgia Department of Labor set forth at Rule 300-10-1-.01 et. seq.

_____ Contractor has 100-499 employees and Contractor warrants that no later than July 1, 2008, Contractor will register at https://www.vis-dhs.com/EmployerRegistration to verify information of all new employees in order to comply with the Immigration Reform and Control Act of 1986 (IRCA) Pub.L. 99-603 and the Georgia Security and Immigration Compliance Act; and by executing any affidavits required by the rules and regulation issued by the Georgia Department of Labor set forth at Rule 300-10-1-.01 et. seq.

_____ Contractor has 99 or fewer employees and Contractor warrants that no later than July 1, 2009, Contractor will register at https://www.vis-dhs.com/EmployerRegistration to verify information of all new employees in order to comply with the Immigration Reform and Control Act of 1986 (IRCA) Pub.L. 99-603 and the Georgia Security and Immigration Compliance Act; and by executing any affidavits required by the rules and regulation issued by the Georgia Department of Labor set forth at Rule 300-10-1-.01 et. seq.

B. Contractor warrants that Contractor has included a similar provision in all written agreements with any subcontractors engaged to perform services under its Contract(s) with the City of Flowery Branch.

_____ _____

Signature Title

Firm Name:

_____

Street/Mailing Address:

_____

City, State, Zip Code:

_____

Telephone Number:

_____

Email Address:

CONTRACTOR AFFIDAVIT AND AGREEMENT

By executing this affidavit, the undersigned contractor verifies its compliance with O.C.G.A. 13-10-91, stating affirmatively that the individual, firm, or corporation which is contracting with City of Flowery Branch has registered with and is participating in a federal work authorization program* [any of the electronic verification of work authorization programs operated by the United States Department of Homeland Security or any equivalent federal work authorization program operated by the United States Department of Homeland Security to verify information of newly hired employees, pursuant to the Immigration Reform Act of 1986 (IRCA), P.L. 99-603], in accordance with the applicability provisions and deadlines established in O.C.G.A. 13-10-91.

The undersigned further agrees that, should it employ or contract with any subcontractor(s) in connection with the physical performance of services pursuant to this contract with City of Flowery Branch, contractor will secure from such subcontractor(s) similar verification of compliance with O.C.G.A. 13-10-91 on the Subcontractor Affidavit provided in Rule 300-10-01-.08 or a substantially similar form. Contractor further agrees to maintain records of such compliance and provide a copy of each such verification to the City of Flowery Branch at the time the subcontractor(s) is retained to perform such service.

_____
EEV / Basic Pilot Program* User Identification Number

_____
BY: Authorized Officer or Agent
(Contractor Name)

_____
Title of Authorized Officer or Agent of Contractor

_____
Printed Name of Authorized Officer or Agent of Contractor

SUBSCRIBED AND SWORN
BEFORE ME ON THIS THE
_____ DAY OF _____, 20___

_____
Notary Public
My Commission Expires:

* As of the effective date of O.C.G.A. 13-10-91, the applicable federal work authorization program is the "EEV / Basic Pilot Program" operated by the U.S. Citizenship and Immigration Services Bureau of the U.S. Department of Homeland Security, in conjunction with the Social Security Administration (SSA)

(End of Form)

SUBCONTRACTOR AFFIDAVIT

By executing this affidavit, the undersigned contractor verifies its compliance with O.C.G.A. 13-10-91, stating affirmatively that the individual, firm, or corporation which is engaged in the physical performance of services under a contract with City of Flowery Branch has registered with and is participating in a federal work authorization program* [any of the electronic verification of work authorization programs operated by the United States Department of Homeland Security or any equivalent federal work authorization program operated by the United States Department of Homeland Security to verify information of newly hired employees, pursuant to the Immigration Reform Act of 1986 (IRCA), P.L. 99-603], in accordance with the applicability provisions and deadlines established in O.C.G.A. 13-10-91.

_____
EEV / Basic Pilot Program* User Identification Number

_____
BY: Authorized Officer or Agent
(Contractor Name)

_____
Title of Authorized Officer or Agent of Contractor

_____
Printed Name of Authorized Officer or Agent of Contractor

SUBSCRIBED AND SWORN
BEFORE ME ON THIS THE
_____ DAY OF _____, 200___

_____
Notary Public
My Commission Expires:

* As of the effective date of O.C.G.A. 13-10-91, the applicable federal work authorization program is the "EEV / Basic Pilot Program" operated by the U.S. Citizenship and Immigration Services Bureau of the U.S. Department of Homeland Security, in conjunction with the Social Security Administration (SSA)

END OF SECTION

SECTION 00410
BID FORM

PROJECT IDENTIFICATION:

Groundwater Wells #4 & #5

CONTRACT IDENTIFICATION AND NUMBER:

F0002.018

THIS BID IS SUBMITTED TO:

City of Flowery Branch
5410 Pine Street
Flowery Branch, GA 30542

THIS BID IS SUBMITTED FROM:

Bidder: _____

Address: _____

_____

Phone: _____

State of Georgia Business License No.: _____

1. The undersigned Bidder proposes and agrees, if this Bid is accepted, to enter into an agreement with Owner in the form included in the Contract Documents to perform and furnish all Work as specified or indicated in the Contract Documents for the Contract Price and within the Contract Time indicated in this Bid and in accordance with the other terms and conditions of the Contract Documents.

2. Bidder accepts all of the terms and conditions of the Advertisement or Invitation to Bid and Instructions to Bidders, including without limitation those dealing with the disposition of Bid security. This Bid will remain subject to acceptance for 60 days after the day of Bid opening. Bidder will sign and submit the Agreement with the Bonds and other documents required by the Bidding Requirements within fifteen days after the date of Owner's Notice of Award.

3. In submitting this Bid, Bidder represents, as more fully set forth in the Agreement, that:

(a) Bidder has examined copies of all the Bidding Documents and of the following Addenda (receipt of all which is hereby acknowledged):

Date	Addendum Number

(b) Bidder has familiarized itself with the nature and extent of the Contract Documents, Work, site, locality, and all local conditions and Laws and Regulations that in any manner may affect cost, progress, performance or furnishing of the Work.

(c) Bidder has studied carefully all reports and drawings of subsurface conditions and drawings of physical conditions which are identified in the Supplementary Conditions as provided in Paragraph 4.2 of the General Conditions, and accepts the determination set forth in Paragraph 4.2.1 of the Supplementary Conditions of the extent of the technical data contained in such reports and drawings upon which Bidder is entitled to rely.

(d) Bidder has obtained and carefully studied (or assumes responsibility for obtaining and carefully studying) all such examinations, investigations, explorations, tests and studies (in addition to or to supplement those referred to in (c) above) which pertain to the subsurface or physical conditions at the site or otherwise may affect the cost, progress, performance or furnishing of the Work as Bidder considers necessary for the performance or furnishing of the Work at the Contract Price, within the Contract Time and in accordance with the other terms and conditions of the Contract Documents, including specifically the provisions of Paragraph 4.2 of the General Conditions; and no additional examinations, investigations, explorations, tests, reports or similar information or data are or will be required by Bidder for such purposes.

(e) Bidder has reviewed and checked all information and data shown or indicated on the Contract Documents with respect to existing Underground Facilities at or contiguous to the site and assumes responsibility for the accurate location of

said Underground Facilities. No additional examinations, investigations, explorations, tests, reports or similar information or data in respect of said Underground Facilities are or will be required by Bidder in order to perform and furnish the Work at the Contract Price, within the Contract Time and in accordance with the other terms and conditions of the Contract Documents, including specifically the provisions of Paragraph 4.3 of the General Conditions.

(f) Bidder has correlated the results of all such observations, examinations, investigations, explorations, tests, reports and studies with the terms and conditions of the Contract Documents.

Bidder has given Engineer written notice of all conflicts, errors or discrepancies that it has discovered in the Contract Documents and the written resolution thereof by Engineer is acceptable to Bidder.

(g) This Bid is genuine and not made in the interest of or on behalf of any undisclosed person, firm or corporation and is not submitted in conformity with an agreement or rules of any group, association, organization or corporation; Bidder has not directly or indirectly induced or solicited any other corporation to refrain from bidding; and Bidder has not sought by collusion to obtain for itself any advantage over any other Bidder or over Owner.

(h) Bidder agrees to commence work under this Agreement on or before a date to be specified in a written "Notice to Proceed" of the Owner.

(i) Bidder accepts the provisions of the Agreement as to liquidated damages in the event of failure to complete the Work on time.

4. Bidder will complete the Work in accordance with the Contract Documents for the following price(s):

The Contractor is directed to Section 01025 “Measurement and Payment” for the methods and limits for payment to the Contractor for the pay items listed below:

(A) BASE BID: Groundwater Wells #4 & #5

BID FORM BEGINS ON PAGE 4

BID FORM					
ITEM NO	QTY	UNIT	DESCRIPTION	UNIT PRICE	TOTAL PRICE
1	80	CY	Rock Removal - Base	$ 75.00	$ 6,000.00
2	80	CY	Rock Removal - Premium		
3	1	LS	Clearing & Grubbing		
4	1	LS	Demolition		
5	1	LS	Groundwater Wells #4 & #5 Improvements Complete (see Section 01025 for limits and extents of payment under this line item)		
6	50	LF	4" RJ DIP Water Main - Open Cut		
7	70	LF	4" RJ DIP Water Main - Horizontal Directional Drill		
8	1,580	LF	8" RJ DIP Water Main - Open Cut Cross-Country		
9	45	LF	8" RJ DIP Water Main - Open Cut Roads		
10	145	LF	8" DR-11 (DIPS) HDPE Water Main - Horizontal Directional Drill		
11	1	EA	2" Tapping Sleeve & Valve (incl. Valve Box & Cover)		
12	1	EA	6" Tapping Sleeve & Valve (incl. Valve Box & Cover)		
13	1	EA	Cut, Cap, & Abandon Ex. 2" Water Line		
14	5	EA	Longside Water Service Transfer		
15	1	LS	Traffic Control		
16	1	LS	Erosion & Sediment Control Complete		
17	1	LS	Landscaping Replacements		
18	1	LS	Electrical Service Allowance	$ 40,000.00	$ 40,000.00
19	1	LS	Natural Gas Service Allowance	$ 15,000.00	$ 15,000.00

20	1	LS	Groundwater Wells #4 & #5 Rehabilitation Allowance	$ 115,000.00	$ 115,000.00
21	1	LS	Supplemental Work Allowance (SWA)	$ 100,000.00	$ 100,000.00
				TOTAL BASE BID AMOUNT:	

Bidder agrees to furnish all labor, materials, and equipment necessary to construct the **Groundwater Wells #4 & #5** for the City of Flowery Branch for the sum of

_____Dollars

($_____).

6. Bidder agrees that the Work will be substantially complete and ready for final payment in accordance with the completion time/dates provided in the Contract and any Addenda.

7. Bidder accepts the provisions of the Agreement as to liquidated damages in the event of failure to complete the Work within the times specified in the Agreement.

8. The following documents are attached to and made a condition of this Bid:
   a. Required Bid Security in the form of 5% of the Bid Total Price.

9. The undersigned further agrees that in case of failure on his part to execute the said contract and the Bond within fifteen (15) consecutive calendar days after written notice being given of the award of the contract, the check or bid bond accompanying this bid, and the monies payable thereon shall be paid into the funds of the Owner as liquidated damages for such failure, otherwise, the check or bid bond accompanying this proposal shall be returned to the undersigned.

10. Communications concerning this Bid shall be addressed to:
    ESG Engineering, LLC
    6400 Peake Rd
    Macon, GA 31210
    Attn: Rachael Crowell
    rcrowell@esgengineering.com

11. Terms used in this Bid which are defined in the General Conditions or Instructions to Bidders will have the meanings indicated in the General Conditions or Instructions to Bidders.

SUBMITTED on _____, 20____.

BIDDER: _____

BY: _____

TITLE: _____

STATE CONTRACTOR
LICENSE NO. _____

ADDRESS: _____

_____

_____

PHONE: _____

Seal: (if bid by a Corporation)

END OF SECTION

SECTION 00460
BID BOND

STATE OF GEORGIA

COUNTY OF HALL

KNOW ALL MEN BY THESE PRESENTS, that we, _____, as Principal, and _____, as Surety, are held and firmly bound unto the City of Flowery Branch for the sum of Dollars ($_____) lawful money of the United States, for the payment of which sum well and truly to be made, we bind ourselves, our heirs, personal representatives, successors and assigns, jointly and severally, firmly by these presents.

WHEREAS, the Principal has submitted to the Owner a Proposal for construction of:

Groundwater Wells 4 & 5

NOW THEREFORE, the conditions of this obligation are such that if the Bid be accepted, the Principal shall within ten days after receipt of conformed contract documents execute a contract in accordance with the Bid upon the terms, conditions and prices set forth therein, and in the form and manner required by the Owner and execute a sufficient and satisfactory Performance Bond and Payment Bond payable to the Owner, each in an amount of one hundred percent (100%) of the total contract price, in form and with security satisfactory to the Owner, or in the event of the failure of the Contractor to execute and deliver the Contract Agreement and give said Performance and Payment Bonds, the Contractor shall pay the Owner the difference not to exceed the penalty hereof between the amount specified in said Proposal and such larger amount for which the Owner may in good faith contract with another party to perform the work covered by said Proposal, and execute the Special Assurances form, then this obligation shall be void; otherwise, it shall be and remain in full force and virtue in law; and the Surety shall, upon failure of the Principal to comply with any or all of the foregoing requirements within the time specified above, immediately pay to the aforesaid Owner, upon demand, the amount hereof in good and lawful money of the United States of America, not as a penalty, but as liquidated damages.

This bond is given pursuant to and in accordance with the provisions of O.C.G.A. Section 36-91-40 et seq. and Section 30-91-50 et seq. an all the provisions of the law referring to this character of

bond as set forth in said sections or as may be hereinafter enacted and these are hereby made a part hereof to the same extent as if set out herein in full.

IN WITNESS WHEREOF, the said Principal has hereunder affixed its signature and said Surety has hereunto caused to be affixed its corporate signature and seal, by its duly authorized officers, on this ____ day of _____, 20____.

PRINCIPAL: _____

Signed and sealed in the presence of

By: _____

1._____

Title: _____

2._____

SURETY: _____

Signed and sealed in the presence of:

By: _____

1. _____

Title: _____

2. _____

END OF SECTION

SECTION 00470
QUALIFICATIONS OF BIDDER

All questions must be answered and the data given must be clear and comprehensive. This statement must be notarized. If necessary, questions may be answered on separate attached sheets. The Bidder may submit any additional information he desires.

1. Legal Name of Bidder.

2. Permanent main office address.

3. When organized.

4. If a corporation, where incorporated.

5. How many years have you been engaged in the contracting business under your present firm or trade name?

6. Contract on hand: (Schedule these, showing amount of each contract and the appropriate anticipated dates of completion.)

7. General character of work performed by your company.

8. Have you ever failed to complete any work awarded to you? If so, where and why?

9. Have you ever defaulted on a contract? If so, where and why?

10. List the more important projects recently completed by your company, stating the approximate cost for each, and the month and year completed.

11. List your major equipment <u>available for this contract.</u>

12. Experience in construction work similar in importance to this project.

13. Background and experience of the principal members of your organization, including the officers.

14. Credit available: $_____.

15. Give Bank Reference _____.

16. Will you, upon request, fill out a detailed financial statement and furnish any other information that may be required by the _____.

17. The undersigned authorizes and requests any person, firm, or corporation to furnish any information requested by the _____, Georgia in verification of the recitals comprising the Statement of Bidder's Qualifications. Dated at _____this ____day of _____, 20_____.

_____
(Name of Bidder)

By _____

Title _____

State of _____

County of _____

_____, being duly sworn deposes and

says that he is _____ of _____
(name of organization)

and that the answers to the foregoing questions and all statements therein contained are true and correct.

Subscribed and sworn to before me this ___ day of _____, 20____.

_____
(Notary Public)

My Commission expires:

_____, 20___

SECTION 00480
CERTIFICATION OF NONSEGREGATED FACILITIES

(To be completed and submitted with Bid)

Bidder certifies that he does not maintain or provide for his employees any segregated facilities at any of his establishments, and that he does not permit his employees to perform their services at any location, under his control, where segregated facilities are maintained. The Bidder agrees that a breach of this certification will be a violation of the Equal Opportunity clause in any contract resulting from acceptance of this bid. As used in this certification, the term "segregated facilities" means any waiting rooms, work areas, restrooms and washrooms, restaurants and other eating areas, timeclocks, locker rooms, and other storage or dressing areas, parking lots, drinking fountains, recreation or entertainment areas, transportation, and housing facilities provided for employees which are segregated by explicit directive or are in fact segregated on the basis of race, color, religion, or national origin, because of habit, local custom, or otherwise. The Bidder agrees that (except where he has obtained identical certification from proposed subcontractors for specific time periods) he will obtain identical certifications from proposed subcontractors prior to the award of subcontracts exceeding $10,000 which are not exempt from the provisions of the Equal Opportunity clause, and that he will retain such certification in his files.

Note: The penalty for making false statements in offers is prescribed in 18 U.S.C. & 1001.

Date _____, 20___ _____
(Name of Bidder)

Official Address

_____

_____

BY:_____

TITLE:_____

SECTION 00481
NONCOLLUSION AFFIDAVIT OF PRIME BIDDER

State of Georgia

County of Hall

_____, being first duly sworn, deposed and says that:

(1) He is

_____ of
(owner, partner, officer, representative, or agent)

_____, the Bidder that has submitted the attached Bid;

(2) He is fully informed respecting the preparation and contents of the attached Bid and of all pertinent circumstances respecting such Bid;

(3) Such Bid is genuine and is not a collusive or sham Bid;

(4) Neither the said Bidder nor any of its officers, partners, owners, agents, representatives, employees or parties in interest, including this affidavit, has in any way colluded, conspired, connived or agreed, directly or indirectly with any other Bidder, firm or person to submit a collusive or sham Bid in connection with the Contract for which the attached Bid has been submitted or to refrain from bidding in connection with such contract, or has in any manner directly or indirectly sought by agreement or collusion or communication or conference with any other Bidder, firm or person to fix the price or prices in the attached Bid or of any other Bidder, or to fix any overhead, profit or cost element of the Bid price or the Bid price of any other Bidder, or to secure through any collusion, conspiracy, connivance or unlawful agreement any advantage against the **City of Flowery Branch** or any person interested in the proposed Contract and;

(5) The price or prices quoted in the attached Bid are fair and proper and are not tainted by any collusion, conspiracy, connivance or unlawful agreement on the part of the Bidder or any of its agents, representatives, owners, employees, or parties in interest, including this affidavit.

By: _____

Title: _____

Subscribed and sworn to before me this ____ day of _____, 20____.

_____
(Notary Public)

My commission expires _____, 20___.

SECTION 00500
AGREEMENT

THIS AGREEMENT is dated as of the ___ day of _____ in the year 20___, by and between the

City of Flowery Branch (hereinafter called OWNER) and _____

(hereinafter called CONTRACTOR).

OWNER and CONTRACTOR, in consideration of the mutual covenants hereinafter set forth, agree as follows:

Article 1. WORK.

CONTRACTOR shall complete all Work as specified or indicated in the Contract Documents. The Work is generally described as follows:

This project will bring two existing wells online to enhance the City's water supply system. The work includes construction of a chemical feed building and covered steel structure, installation of approx. 2,000 LF of new water mains, water service transfers, reconditioning of two (2) existing wells with testing, cleaning, air bursting, new pumps, piping, enclosures, etc., electrical & controls improvements, and site improvements. Site work will involve clearing & grubbing, demolition, grading, drainage, fencing, and erosion control. Water main extensions will be installed using horizontal directional drilling (HDD) and open-cut trenching methods. Work also includes traffic control, utility service coordination, and other miscellaneous related work.

Article 2. ENGINEER.

The Project has been designed by **ESG Engineering, LLC** who is hereinafter called ENGINEER and who is to act as OWNER's representative, assume all duties and responsibilities and have the rights and authority assigned to ENGINEER in the Contract Documents in connection with completion of the Work in accordance with the Contract Documents.

Article 3. CONTRACT TIME.

3.1. CONTRACTOR agrees to commence Work under this Agreement on or before a date to be specified on a written "Notice to Proceed" of the OWNER and to fully complete the Work within 180 consecutive calendar days from the "Notice to Proceed" date.

3.2. Liquidated Damages. OWNER and CONTRACTOR recognize that time is of the essence of this Agreement and that OWNER will suffer financial loss if the Work is not completed within the times specified in Paragraph 3.1 above, plus any extensions

thereof allowed in accordance with Article 12 of the General Conditions. They also recognize the delays, expense and difficulties involved in proving in a legal or arbitration proceeding the actual loss suffered by OWNER if the Work is not completed on time. Accordingly, instead of requiring any such proof, OWNER and CONTRACTOR agree that as liquidated damages for delay (but not as a penalty) CONTRACTOR shall pay OWNER Five Hundred Dollars ($500.00) for each day that expires after the time specified in Paragraph 3.1.

Article 4. CONTRACT PRICE.

OWNER shall pay CONTRACTOR for completion of the Work in accordance with the Contract Documents in current as follows:

_____

Article 5. PAYMENT PROCEDURES.

CONTRACTOR shall submit Applications for Payment in accordance with Article 14 of the General Conditions. Applications for Payment will be processed by ENGINEER as provided in the General Conditions.

5.1 Progress Payments; Retainage. OWNER shall make progress payments on account of the Contract Price on the basis of CONTRACTOR'S Applications for Payment as recommended by ENGINEER, on or about the 25th day of each month during performance of the Work as provided in Paragraphs 5.1.1, 5.1.1.2 and 5.2 below. All such payments will be measured by the schedule of values established in Paragraph 14.1 of the General Conditions.

5.1.1 For Cost of Work: Progress payments on account of the Cost of the Work will be made:

5.1.1.1 Prior to Substantial Completion, progress payments will be made in an amount equal to the percentage indicated below, but, in each case, less the aggregate of payments previously made and less such amounts as ENGINEER shall determine, or OWNER may withhold, including but not limited to liquidated damages, in accordance with Paragraph 14.2 of the General Conditions.

95% of the work completed (with balance being retainage). If Work has been 50% completed as determined by ENGINEER, and if the character and progress of the Work have been satisfactory to OWNER and ENGINEER, OWNER, on recommendation of ENGINEER, may determine that as long as the character and progress of the Work remain satisfactory to them, there will be no additional retainage on

account of Work completed, in which case the remaining progress payments prior to Substantial Completion will be in an amount equal to 100% of the Work completed.

95% of the Cost of the Work (with the Balance being retainage) applicable to materials and equipment not incorporated in the Work (but delivered, suitably stored and accompanied by documentation satisfactory to OWNER as provided in Paragraph 14.2 of the General Conditions).

5.1.1.2 Upon Substantial Completion, Owner shall pay an amount sufficient to increase total payments to Contractor to 100 percent of the Work completed, less 200 percent of the Market value of the Work remaining and less such amounts as Engineer shall determine in accordance with Paragraph 14.7 of the General Conditions.

5.2 Final Payment. Upon final completion and acceptance of the Work in accordance with Paragraph 14.7 of the General Conditions, OWNER shall pay the remainder of the Contract Price as recommended by ENGINEER as provided in said Paragraph 14.13.

Article 6. CONTRACTOR'S REPRESENTATIONS.

In order to induce OWNER to enter into this Agreement CONTRACTOR makes the following representations:

6.1 CONTRACTOR has familiarized itself with the nature and extent of the Contract Documents, Work, site, locality, and all local conditions and Laws and Regulations that in any manner may affect cost, progress, performance or furnishing of the Work.

6.2 CONTRACTOR has studied carefully all reports of explorations and tests of subsurface conditions and drawings of physical conditions which are identified in the Supplementary Conditions as provided in Paragraph 4.2 of the General Conditions, and accepts the determination set forth in Paragraph 5 of the Supplementary Conditions of the extent of the technical data contained in such reports and drawings upon which CONTRACTOR is entitled to reply.

6.3 CONTRACTOR has obtained and carefully studied (or assumes responsibility for obtaining and carefully studying) all such examinations, investigations, explorations, tests, reports and studies (in addition to or to supplement those referred to in Paragraph 6.2 above) which pertain to the subsurface or physical conditions at or contiguous to the site or otherwise may affect the cost, progress, performance or furnishing of the Work as CONTRACTOR considers necessary for the performance or furnishing of the Work at the Contract Price, within the Contract Time and in

accordance of Paragraph 4.2 of the General Conditions; and no additional examinations, investigations, explorations, tests, reports, studies or similar information or data are or will be required by CONTRACTOR for such purposes.

6.4 CONTRACTOR has reviewed and checked all information and data shown or indicated on the Contract Documents with respect to existing Underground Facilities at or contiguous to the site and assumes responsibility for the accurate location of said Underground Facilities. No additional examinations, investigations, explorations, tests, reports, studies or similar information or data in respect of said Underground Facilities are or will be required by CONTRACTOR in order to perform and furnish the Work at the Contract Price, within the Contract Time and in accordance with the other terms and conditions of the Contract Documents, including specifically the provisions of Paragraph 4.3 of the General Conditions.

6.5 CONTRACTOR has correlated the results of all such observations, examinations, investigations, explorations, tests, reports and studies with the terms and conditions of the Contract Documents.

6.6 CONTRACTOR has given ENGINEER written notice of all conflicts, errors or discrepancies that he has discovered in the Contract Documents and the written resolution thereof by ENGINEER is acceptable to CONTRACTOR.

Article 7. CONTRACT DOCUMENTS.

7.1 This Agreement

7.2 Exhibits to this Agreement

7.3 Performance and other Bonds

7.4 Notice of Award

7.5 General Conditions

7.6 Supplementary Conditions

7.7 GEFA Supplemental General Conditions

7.8 Specifications bearing the title City of Flowery Branch Groundwater Wells #4 & #5 consisting of divisions as listed in table of contents thereof.

7.9 Drawings, consisting of a cover sheet and sheets numbered C0.0 through C9.6, inclusive with each sheet bearing the following general title: City of Flowery Branch Groundwater Wells #4 & #5

7.10 Addenda numbers __ to __, inclusive.

7.11 CONTRACTOR's Bid

7.12 Documentation submitted by CONTRACTOR prior to Notice of Award.

7.13 The following which may be delivered or issued after the Effective Date of the Agreement and are not attached hereto: All Written Amendments and other documents amending, modifying, or supplementing the Contract Documents pursuant to Paragraphs 3.4 and 3.5 of the General Conditions.

7.14 The documents listed in Paragraphs 7.2 et seq. above are attached to this Agreement (Except as expressly noted otherwise above).

There are no Contract Documents other than those listed above in this Article 7. The Contract Documents may only be amended, modified, or supplemented as provided in Paragraphs 3.4 and 3.5 of the General Conditions.

Article 8. MISCELLANEOUS

8.1 Terms used in this Agreement which are defined in Article 1 of the General Conditions will have the meanings indicated in the General Conditions.

8.2 No assignment by a party hereto of any rights under or interests in the Contract Documents will be binding on another party hereto without the written consent of the party sought to be bound; and specifically but without limitation moneys that may become due and moneys that are due may not be assigned without such consent (except to the extent that the effect of this restriction may be limited by law), and unless specifically stated to the contrary in any written consent to an assignment no assignment will release or discharge the assignor from any duty or responsibility under the Contract Documents.

8.3 OWNER and CONTRACTOR each binds itself, its partners, successors, assigns and legal representatives to the other party hereto, its partners, successors, assigns and legal representatives in respect of all covenants, agreements and obligations contained in the Contract Documents.

8.4 Any provision or part of the Contract documents held void or unenforceable under any Law or Regulation shall be deemed stricken, and all remaining provisions shall continue to be valid and binding upon OWNER and CONTRACTOR, who agree that the Contract documents shall be reformed to replace such stricken provision or part thereof with a valid and enforceable provision that comes as close as possible to expressing the intention of the stricken provision.

Article 9. OTHER PROVISIONS.

IN WITNESS WHEREOF. OWNER and CONTRACTOR have signed this Agreement in four (4) counterparts. One counterpart each has been delivered to OWNER, CONTRACTOR and ENGINEER. All portions of the Contract Documents have been signed or identified by OWNER and CONTRACTOR or by ENGINEER on their behalf.

This Agreement will be effective on _____, 20___.

OWNER	CONTRACTOR
By _____	By _____
[CORPORATE SEAL]	[CORPORATE SEAL]
Attest _____	Attest _____
Address for giving notices	Address for giving notices
City of Flowery Branch	_____
5410 Pine Street	_____
Flowery Branch, GA 30542	_____
(If OWNER is a public body, attach evidence of authority to sign and resolution or other documents authorizing execution of Agreement)	
License No._____	

Agent for service of process: _____

_____

(If CONTRACTOR is a corporation, attach evidence of authority to sign)

END OF SECTION

SECTION 00610
PERFORMANCE BOND

STATE OF GEORGIA

COUNTY OF HALL

KNOW ALL MEN BY THESE PRESENTS, that we, _____

_____

(Name and Address of Contractor)

as Principal (hereinafter known as "CONTRACTOR"), and we, _____

_____

(Name and Address of Surety)

as Surety, do hereby acknowledge ourselves indebted and firmly bound and held unto the City of Flowery Branch for the use and benefit of those entitled thereto, in the sum of

_____ Dollars (_____)
(Contract Sum)

for the payment of which well and truly to be made, in lawful money of the United States, we do hereby bind ourselves, successors, assigns, heirs, and personal representatives.

BUT THE CONDITION OF THE FOREGOING OBLIGATION OR BOND IS THIS:

WHEREAS, the OWNER has engaged the said CONTRACTOR for the sum of
_____ Dollars (_____)
(Contract Sum)

for the construction of: City of Flowery Branch - Groundwater Wells #4 & #5
(Name of Contract/Project)

as more fully appears in a written Agreement bearing the date of _____, 20_____, a copy of which Agreement is by reference hereby made a part hereof.

NOW, THEREFORE, if said Contractor shall fully and faithfully perform all the undertakings and obligations under the said agreement or contract hereinbefore referred to and shall fully indemnify and save harmless the said OWNER from all costs and damage whatsoever which it may suffer by reason of any failure on the part of said CONTRACTOR to do so, and shall fully reimburse and repay the said default, and shall guarantee all products and workmanship against defects for a period of one year, then this obligation or bond shall be null and void, otherwise, it shall remain in full force and effect.

And for value received it is hereby stipulated and agreed that no change, extension of time, alteration or addition to the terms of the said Agreement or Contract or in the work to be performed there under, or the Specifications accompanying the same shall in any way affect the obligations under the obligation or bond, and notice is hereby waived of any such damage, extension of time, alteration or addition to the terms of the Agreement or Contract or to the work or to the Specifications.

This bond is given pursuant to and in accordance with the provisions of O.C.G.A. Section 36-91-40 et seq and 36-91-70 et seq and all the provisions of the law referring to this character of bond as set forth in said sections or as may be hereinafter enacted and these are hereby made a part hereof to the same extent as if set out herein in full.

IN WITNESS WHEREOF, the said CONTRACTOR has hereunder affixed its signature and said Surety has hereunto caused to be affixed its corporate signature and seal, by its duly authorized officers, on this ___ day of _____, 20____. Executed in 4 counterparts.

SECTION IS CONTINUED ON PAGE 3

CONTRACTOR: _____

Signed and sealed in the presence of:

By: _____

1._____ Title: _____

2._____ (SEAL)

SURETY: _____

Signed and sealed in the presence of:

By: _____

1. _____ Title: _____

2. _____ (SEAL)

NOTE:

1. Date of bond must not be prior to date of contract. If CONTRACTOR is a PARTNERSHIP, all partners should execute bond.

2. Surety companies executing bonds must appear on the Treasure Department's most current list (circular 570 as amended) and be authorized to transact business in the state where the PROJECT is located.

END OF SECTION

SECTION 00615
PAYMENT BOND

STATE OF GEORGIA

COUNTY OF HALL

KNOW ALL MEN BY THESE PRESENTS, that we, _____

_____

(Name and Address of Contractor)

as Principal (hereinafter known as "CONTRACTOR"), and we, _____

_____

(Name and Address of Surety)

as Surety, do hereby acknowledge ourselves indebted and firmly bound and held unto the City of Flowery Branch for the use and benefit of those entitled thereto, in the sum of

_____ Dollars (_____)

(Contract Sum)

for the payment of which well and truly to be made, in lawful money of the United States, we do hereby bind ourselves, successors, assigns, heirs, and personal representatives.

BUT THE CONDITION OF THE FOREGOING OBLIGATION OR BOND IS THIS:

WHEREAS, the OWNER has engaged the said CONTRACTOR for the sum of

_____ Dollars (_____)

(Contract Sum)

for the construction of: City of Flowery Branch – Groundwater Wells #4 & #5

(Name of Contract/Project)

as more fully appears in a written Agreement bearing the date of _____, 20_____, a copy of which Agreement is by reference hereby made a part hereof.

NOW, THEREFORE, THE CONDITION OF THIS OBLIGATION IS SUCH, that if said CONTRACTOR and all subcontractors to whom any portion of the work provided for in said Contract is sublet and all assignees of said Contractor and of such subcontractors shall promptly make payments to all persons supplying him or them with labor, products, services, or supplies for or in the prosecution of the work provided for in such Contract, or in any amendment or extension of or addition to said Contract, and for the payment of reasonable attorney's fees, incurred by the claimants in suits on this bond, then the above obligation shall be void; otherwise, it shall remain if full force and effect.

HOWEVER, this bond is subject to the following conditions and limitations:

(a) Any person, firm or corporation that has furnished labor, products, or supplies for or in the prosecution of the work provided for in said Contract shall have a direct right of action against the CONTRACTOR and Surety on this bond, which right of action shall be asserted in a proceeding, instituted in the County in which the work provided for in said Contract is to be performed or in any county in which Contractor or Surety does business. Such right of action shall be asserted in proceedings instituted in the name of the claimant or claimants for his or their use and benefit against said CONTRACTOR or Surety or either of them (but not later than one year after the final settlement or said Contract) in which action such claim or claims shall be adjudicated and judgment rendered thereon.

(b) The Principal and Surety hereby designate and appoint the _____, as the agent of each them to receive and accept service of process or other pleading issued or filed in any proceeding instituted on this bond and hereby consent that such service shall be the same as personal service on the CONTRACTOR and/or Surety.

(c) In no event shall the Surety be liable for a greater sum than the penalty of this bond, or subject to any suit, action or preceding thereon that is instituted later than one year after the final settlement of said Contract.

(d) This bond is given pursuant to and in accordance with provisions of O.C.G.A. Section 36-91-40 et seq and 36-91-90 et seq and all the provisions of law referring to this character of bond as set forth in said sections or as may be hereinafter enacted, and these are hereby made a part hereof to the same extent as if set out herein in full.

IN WITNESS WHEREOF, the said CONTRACTOR has hereunder affixed its signature and said Surety has hereunto caused to be affixed its corporate signature and seal, by its duly authorized officers, on this __ day of _____, 20_____. Executed in 4 counterparts.

CONTRACTOR: _____

Signed and sealed in the presence of:

By: _____

1._____ Title: _____

2._____ (SEAL)

SURETY: _____

Signed and sealed in the presence of:

By: _____

1. _____ Title: _____

2. _____ (SEAL)

NOTE:

1. Date of bond must not be prior to date of contract. If CONTRACTOR is a PARTNERSHIP, all partners should execute bond.

2. Surety companies executing bonds must appear on the Treasure Department's most current list (circular 570 as amended) and be authorized to transact business in the state where the PROJECT is located.

END OF SECTION

SECTION 00621
NOTICE OF AWARD

PROJECT DESCRIPTION: **City of Flowery Branch – Groundwater Wells #4 & #5**

The OWNER has considered the BID submitted by you for the above-described WORK in response to its Advertisement for Bids dated _____, and Instruction to Bidders.

You are hereby notified that your BID has been accepted for items in the amount of

_____

($_____).

You are required by the Instructions to Bidders to execute the Agreement and furnish the required CONTRACTOR's Performance BOND, Payment BOND and Certificates of Insurance with fifteen (15) calendar days from the date of the Notice to you.

If you fail to execute said Agreement and to furnish said BONDS within fifteen (15) days from the date of this notice, said OWNER will be entitled to consider all your rights arising out of the OWNER'S acceptance of your BID as abandoned and as a forfeiture of your BID BOND. The OWNER will be entitled to such other rights as may be granted by law.

You are required to return an acknowledged copy of this NOTICE of AWARD to the OWNER.

Dated this _____ day of _____, 20___.

_____City of Flowery Branch_____
OWNER

By: _____

Title: _____

ACCEPTANCE OF NOTICE

Receipt of the above NOTICE OF AWARD is hereby acknowledged by _____ this ____ day of _____, 20____.
(Contractor)

By: _____
Title: _____

SECTION 00622
NOTICE TO PROCEED

To: _____

_____

_____

Date: _____

Project:

City of Flowery Branch
Groundwater Wells #4 & #5

_____

You are hereby notified to commence WORK in accordance with the Agreement dated on or before _____, and you are to complete the WORK within 180 consecutive calendar days thereafter. The date of completion of all WORK is therefore _____.

_____City of Flowery Branch_____
OWNER

By _____

Title:_____

ACCEPTANCE OF NOTICE

Receipt of the above NOTICE
TO PROCEED is hereby
acknowledged by

_____,

this the _____ day of _____, 20___

By _____

Title _____

SECTION 00700
GENERAL CONDITIONS

TABLE OF CONTENTS

Article Number	Title	Page
1	DEFINITIONS	00700-6
2	PRELIMINARY MATTERS	00700-7
3	CONTRACT DOCUMENTS: INTENT, AMENDING AND REUSE	00700-8
4	AVAILABILITY OF LANDS; PHYSICAL CONDITIONS; REFERENCE POINTS	00700-9
5	BONDS AND INSURANCE	00700-11
6	CONTRACTOR'S RESPONSIBILITIES	00700-13
7	OTHER WORK	00700-18
8	OWNER'S RESPONSIBILITIES	00700-19
9	ENGINEER'S STATUS DURING CONSTRUCTION	00700-19
10	CHANGES IN THE WORK	00700-21
11	CHANGE OF CONTRACT PRICE	00700-22
12	CHANGE OF CONTRACT TIME	00700-25
13	WARRANTY AND GUARANTEE; TESTS AND INSPECTIONS; CORRECTION, REMOVAL OR ACCEPTANCE OF DEFECTIVE WORK	00700-25
14	PAYMENTS TO CONTRACTOR AND COMPLETION	00700-27
15	SUSPENSION OF WORK AND TERMINATION	00700-30
16	ARBITRATION	00700-32
17	MISCELLANEOUS	00700-32

INDEX

Article of Paragraph	Number
Acceptance of Insurance	5.13
Access to the Work	13.2
Addenda--definition of (see definition of Specifications)	1
Agreement--definition of	1
All Risk Insurance	5.6
Amendment, Written	1, 3.1.1
Application for Payment--definition of	1
Application for Payment, Final	14.12
Application for Progress Payment	14.2
Application for Progress Payment--review of	14.4 14.7
Arbitration	16
Authorized Variation in Work	9.5
Availability of Lands	4.1
Award, Notice of--defined	1
Before Starting Construction	2.5-2.8
Bid--definition of	1
Bonds and Insurance--in general	5
Bonds--definition of	1
Bonds, Delivery of	2.1-5.1
Bonds, Performance and Other	5.1-5.2
Cash Allowances	11.8
Change Order--definition of	1
Change Orders--to be executed	10.4
Changes in the Work	10
Claims, Waiver of--on Final Payment	14.16
Clarifications and Interpretations	9.4
Cleaning	6.17
Completion	14
Completion, Substantial	14.8-14.9
Conference, Preconstruction	2.8
Conflict, Error, Discrepancy--Contractor to Report	2.5,3.3
Construction Machinery, Equipment, etc.	6.4
Continuing Work	6.29
Contract Documents--amending and supplementing	3.4-3.5
Contract Documents--definition of	1
Contract Documents--Intent	3.1-3.3
Contract Documents--Reuse of	3.6
Contract Price, Change of	11
Contract Price—definition	1
Contract Time, Change of	12
Contract Time, Commencement of	2.3
Contract Time--definition of	1
Contractor--definition of	1
Contractor May Stop Work or Terminate	15.5
Contractor's Continuing Obligation	14.15
Contractor's Duty to Report Discrepancy in Documents	2.5, 3.2
Contractor's Fee--Cost Plus	11.4.5.6, 11.5.1, 11.6-11.7
Contractor's Liability Insurance	5.3
Contractor's Responsibilities--in general	6
Contractor's Warranty of Title	14.3
Contractor—other	7
Contractual Liability Insurance	5.4
Coordinating Contractor--definition of	7.4
Coordination	7.4
Copies of Documents	2.2
Correction or Removal of Defective Work	13.11
Correction Period, One Year	13.12
Correction, Removal or Acceptance of *Defective* Work--in general	13.11-13.14
Cost--net decrease	11.6.2
Cost of Work	11.4-11.5
Costs, Supplemental	11.4.5
Day--definition of	1
Defective--definition of	1
Defective Work, Acceptance of	13.13
Defective Work, Correction or Removal of	13.11
Defective Work--in general	13.14.7 14.11
Defective Work, Rejecting	9.6
Definitions	1
Delivery of Bonds	2.1
Determination for Unit Prices	9.10
Disputes, Decisions by Engineer	9.11- 9.12
Documents, Copies of	2.2
Documents, Record	6.19
Documents, Reuse	3.6
Drawings--definition of	1
Easements	4.1
Effective date of Agreement—definition of	1
Emergencies	6.22
Engineer--definition of	1
Engineer's Decisions	9.10-9.12
Engineer's--Notice Work is Acceptable	14.13
Engineer's Recommendation of Payment	14.4, 14.13
Engineer's Responsibilities, Limitations on	6.6, 9.11, 9.13-9.16
Engineer's Status During Construction--in general	9
Equipment, Labor, Materials and	6.3-6.6

Equivalent Materials and Equipment 6.7
Explorations of physical conditions 4.2

Fee, Contractor's--Costs Plus 11.6
Field Order--definition of 1
Field Order--issued by Engineer 3.5.1
9.5
Final Application for Payment 14.12
Final Inspection 14.11
Final Payment and Acceptance 14.13
Final Payment, Recommendation of 14.13-
14.14

General Provisions 17.3-17.4
General Requirements--definition of 1
General Requirements--principal
references to 2.6,4.4
6.4, 6.6-
6.7,6.23
Giving Notice 17.1
Guarantee of Work--by Contractor 13.1

Indemnification 6.30-6.32,
7.5
Inspection, Final 14.11
Inspection, Tests and 13.3
Insurance, Bonds and--in general 5
Insurance, Certificates of 2.7,5
Insurance--completed operations 5.3
Insurance, Contractor's Liability 5.3
Insurance, Contractual Liability 5.4
Insurance, Owner's Liability 5.5
Insurance, Property 5.6, 5.13
Insurance--Waiver of Rights 5.11
Intent of Contract Documents 3.3, 9.14
Interpretations and Clarifications 9.4
Investigations of physical conditions 4.2

Labor, Materials and Equipment 6.3-6.5
Laws and Regulations-- definition of 1
Laws and Regulations—general 6.14
Liability Insurance--Contractor's 5.3
Liability Insurance--Owner's 5.5
Liens--definitions of 14.2
Limitations on Engineer's
Responsibilities 6.6, 9.11,
9.13-9.16

Materials and equipment-- furnished by
Contractor 6.3
Materials and equipment--not
incorporated in Work 14.2
Materials or equipment-- equivalent 6.7
Miscellaneous Provisions 17
Multi-prime contracts 7

Notice, Giving of 17.1
Notice of Acceptability of Project 14.13
Notice of Award--definition of 1
Notice to Proceed--definition of 1
Notice to Proceed--giving of 2.3

"Or-Equal" Items 6.7
Other contractors 7
Other work 7
Overtime Work--prohibition of 6.3
Owner--definition of 1
Owner May Correct *Defective* Work 13.14
Owner May Stop Work 13.10
Owner May Suspend Work, Terminate 15.1-
15.4
Owner's Duty to Execute Change Orders 11.8
Owner's Liability Insurance 5.5
Owner's Representative-- Engineer to
serve as 9.1
Owner's Responsibilities--in general 8
Owner's Separate Representative at site 9.3

Partial Utilization 14.10
Partial Utilization--definition of 1
Partial Utilization--Property Insurance 5.15
Patent Fees and Royalties 6.12
Payments, Recommendation of 14.4-
14.7,
14.13
Payments to Contractor--in general 14
Payments to Contractor--when due 14.4,
14.13
Payments to Contractor--withholding 14.7
Performance and other Bonds 5.1-
5.2
Permits 6.13
Physical Conditions 4.2
Physical Conditions-Engineer's review 4.2.4
Physical Conditions-existing structures 4.2.2
Physical Conditions-explorations and reports 4.2.1
Physical Conditions-possible document
change 4.2.5
Physical Conditions-price and
time adjustments 4.2.5
Physical Conditions-report of differing 4.2.3
Physical Conditions-Underground Facilities 4.3
Preconstruction Conference 2.8
Preliminary Matters 2

Premises, Use of 6.16-6.18
Price,Change of Contract 11
Price-Contract--definition of 1
Progress Payment, Applications for 14.2
Progress Payment - retainage 14.2

Progress schedule 2.6, 2.9, 6.6, 6.29, 15.2.6.
Project, definition of 1
Project Representation--provision of 9.3
Project Representation, Resident-- definition of 1
Project, Starting the 2.4
Property Insurance 5.6-5.13
Property Insurance-Partial Utilization 5.15
Property Insurance--Receipt and Application of Proceeds 5.12-5.13
Protection, Safety and 6.20-6.21
Punch list 14.11

Recommendations of Payment 14.4, 14.13
Record Documents 6.19
Reference Points 4.4
Regulations, Laws and 6.14
Rejecting *Defective* Work 9.6
Related Work at Site 7.1-7.3
Remedies Not Exclusive 17.4
Removal or Correction of *Defective* Work 13.11
Resident Project Representative-- definition of 1
Resident Project Representative-- provision for 9.3
Responsibilities, Contractor's-- in general 6
Responsibilities, Engineer's-- in general 9
Responsibilities, Owner's-- in general 8
Retainage 14.2
Reuse of Documents 3.5
Rights of Way 4.1
Royalties, Patent Fees and 6.12

Safety and Protection 6.20-6.21
Samples 6.23-6.28
Schedule of progress 2.6, 2.8-2.9, 6.6, 6.29, 15.2.6
Schedule of Shop Drawing Submissions 2.6,2.8-2.9, 6.23, 14.1
Schedule of values 2.6-2.8 14.1
Schedules, Finalizing 2.8
Shop Drawing and Samples 6.23-6.28
Shop Drawings--definition of 1
Shop Drawings, use to approve substitutions 6.7.3
Site, Visits to--by Engineer 9.2
Specifications--definition of 1
Starting Construction, Before 2.5-2.8
Starting the Project 2.4
Stopping Work--by Contractor 15.5
Stopping Work--by Owner 13.10
Subcontractor--definition of 1
Subcontractors--in general 6.8-6.11
Subcontracts--required provisions 5.11.1, 6.11, 11.4.3
Substantial Completion-- certification of 14.8
Substantial Completion-- definition of 1
Substitute or "Or-Equal" Items 6.7
Subsurface Conditions 4.2-4.3
Supplemental costs 11.4.5
Supplementary Conditions-- definition of 1
Supplementary Conditions--principal references to 2.2, 4.2, 5.1, 5.3, 5.6-5.8, 6.3, 6.13, 6.23, 7.4, 9.3
Supplementing Contract Documents 3.4-3.5
Supplier--definition of 1
Supplier--principal references to 3.6, 6.5, 6.7-6.9, 6.20, 6.24, 9.13, 9.16, 11.8, 13.14, 14.12
Surety--consent to payment 14.12, 14.14
Surety--Engineer has no duty to 9.13
Surety--notice to 10.1, 10.5, 15.2
Surety--qualification of 5.1, 5.2
Suspending Work, by Owner 15.1
Suspension of Work and Termination in general 15
Superintendent--Contractor's 6.2

Supervision and Superintendence 6.1-6.2

Taxes--Payment by Contractor 6.15
Termination--by Contractor 15.5
Termination--by Owner 15.2-15.4
Termination, Suspension of Work and --in general 15
Tests and Inspections 13.3-13.7
Time, Change of Contract 12
Time, Computation of 17.2
Time, Contract--definition of 1

Uncovering Work 13.8-13.9
Underground Facilities--definition Of 1
Underground Facilities--not shown or indicated 4.3.2
Underground Facilities--protection of 4.3,6.20
Underground Facilities--shown or indicated 4.3.1
Unit Price Work--definition of 1
Unit Price Work-- general 11.9, 14.1, 14.5
Unit Prices 11.3.1
Unit Prices, Determinations for 9.10
Use of Premises 6.16-6.18
Utility owners 6.13, 6.20, 7.2-7.3

Values, Schedule of 2.6, 2.8, 14.1
Variations in Work--Authorized 6.25, 6.27, 9.5
Visits to Site--by Engineer 9.2

Waiver of Claims--on Final Payment 14.16
Waiver of Rights by insured parties 5.10, 6.11
Warranty and Guarantee--by Contractor 13.1
Warranty of Title, Contractor's 14.3
Work, Access to 13.2
Work--by others 7
Work Continuing During Disputes 6.29
Work, Cost of 11.4-11.5
Work--definition of 1
Work Directive Change--definition of 1
Work Directive Change--principal references to 3.4.3, 10.1-10.2
Work, Neglected by Contractor 13.14
Work, Stopping by Contractor 15.5
Work, Stopping by Owner 15.1-15.4
Written Amendment--definition of 1
Written Amendment--principal references to 3.4.1, 10.1, 11.2. 12.1

SECTION 00700
GENERAL CONDITIONS

ARTICLE 1 - DEFINITIONS

Wherever used in these General Conditions or in the other Contract Documents the following terms have the meanings indicated which are applicable to both the singular and plural thereof:

Addenda - Written or graphic instruments issued prior to the opening of Bids which clarify, correct or change the bidding documents or the Contract Documents.

Agreement - The written agreement between OWNER and CONTRACTOR covering the Work to be performed; other Contract Documents are attached to the Agreement and made a part thereof as provided therein.

Application for Payment - The form accepted by ENGINEER which is to be used by CONTRACTOR in requesting progress for final payments and which is to include such supporting documentation as is required by the Contract Documents.

Bid - The offer or proposal of the bidder submitted on the prescribed form setting forth the prices for the Work to be performed.

Bonds - Bid, performance and payment bonds and other instruments of security.

Change Order - A document recommended by ENGINEER, which is signed by CONTRACTOR and OWNER and authorizes an addition, deletion or revision in the Work, or an adjustment in the Contract Price or the Contract Time, issued on or after the Effective Date of the Agreement.

Contract Documents - The Agreement, Addenda (which pertain to the Contract Documents), CONTRACTOR'S Bid (including documentation accompanying the Bid and any post-Bid documentation submitted prior to the Notice of Award) when attached as an exhibit to the Agreement, the Bonds, these General Conditions, the Supplementary Conditions, the Specifications and the Drawings as the same are more specifically identified in the Agreement, together with all amendments, modifications and supplements issued pursuant to paragraphs 3.4 and 3.5 on or after the Effective Date of the Agreement.

Contract Price - The moneys payable by OWNER to CONTRACTOR under the Contract Documents as stated in the Agreement (subject to the provisions of paragraph 11.9.1 in the case of Unit Price Work).

Contract Time - The number of days (computed as provided in paragraph 17.2) or the date stated in the Agreement for the completion of the Work.

CONTRACTOR - The person, firm or corporation with whom OWNER has entered into the Agreement.

Defective - An adjective which when modifying the word Work refers to Work that is unsatisfactory, faulty or deficient, or does not conform to the Contract Documents, or does not meet the requirements of any inspection, reference standard, test or approval referred to in the Contract Documents, or has been damaged prior to ENGINEER's recommendation of final payment (unless responsibility for the

protection thereof has been assumed by OWNER at Substantial Completion in accordance with paragraph 14.8 or 14.10).

Drawings - The drawings which show the character and scope of the Work to be performed and which have been prepared or approved by ENGINEER and are referred to in the Contract Documents.

Effective Date of the Agreement - The date indicated in the Agreement on which it becomes effective, but if no such date is indicated it means the date on which the Agreement is signed and delivered by the last of the two parties to sign and deliver.

ENGINEER - The person, firm or corporation named as such in the Agreement.

Field Order - A written order issued by ENGINEER which orders minor changes in the Work in accordance with paragraph 9.5 but which does not involve a change in the Contract Price or the Contract Time.

General Requirements - Sections of Division 1 of the Specifications.

Laws and Regulations; Laws or Regulations - Laws, rules, regulations, ordinances, codes and/or orders.

Notice of Award - The written notice by OWNER to the apparent successful bidder stating that upon compliance by the apparent successful bidder with the conditions precedent enumerated therein, within the time specified, OWNER will sign and deliver the Agreement.

Notice to Proceed - A written notice given by OWNER to CONTRACTOR (with a copy to ENGINEER) fixing the date on which the Contract Time will commence to run and on which CONTRACTOR shall start to perform CONTRACTOR's obligations under the Contract Documents.

OWNER - The public body or authority, corporation, association, firm or person with whom CONTRACTOR has entered into the Agreement and for whom the Work is to be provided.

Partial Utilization - Placing a portion of the Work in service for the purpose for which it is intended (or a related purpose) before reaching Substantial Completion for all the Work.

Project - The total construction of which the Work to be provided under the Contract Documents may be the whole, or a part as indicated elsewhere in the Contract Documents.

Resident Project Representative - The authorized representative of ENGINEER who is assigned to the site or any part thereof.

Shop Drawings - All drawings, diagrams, illustrations, schedules and other data which are specifically prepared by or for CONTRACTOR to illustrate some portion of the Work and all illustrations, brochures, standard schedules, performance charts, instructions, diagrams and other information prepared by a Supplier and submitted by CONTRACTOR to illustrate material or equipment for some portion of the Work.

Specifications - Those portions of the Contract Documents consisting of written technical descriptions of materials, equipment, construction systems, standards and workmanship as applied to the Work and certain administrative details applicable

thereto.

Subcontractor - An individual, firm or corporation having a direct contract with CONTRACTOR or with any other Subcontractor for the performance of a part of the Work at the site.

Substantial Completion - The Work (or a specified part thereof) has progressed to the point where, in the opinion of ENGINEER as evidenced by ENGINEER's definitive certificate of Substantial Completion, it is sufficiently complete, in accordance with the Contract Documents, so that the Work (or specified part) can be utilized for the purposes for which it is intended; or if there be no such certificate issued, when final payment is due in accordance with paragraph 14.13. The terms "substantially complete" and "substantially completed" as applied to any Work refer to Substantial Completion thereof.

Supplementary Conditions - The part of the Contract Documents which amends or supplements these General Conditions.

Supplier - A manufacturer, fabricator, supplier, distributor, materialman or vendor.

Underground Facilities - All pipelines, conduits, ducts, cables, wires, manholes, vaults, tanks tunnels or other such facilities or attachments, and any encasements containing such facilities which have been installed underground to furnish any of the following services or materials; electricity, gases, steam, liquid petroleum products, telephone or other communications, cable television, sewage and drainage removal, traffic or other control systems or water.

Unit Price Work - Work to be paid for on the basis of unit prices.

Work - The entire completed construction or the various separately identifiable parts thereof required to be furnished under the Contract Documents. Work is the result of performing services, furnishing labor and furnishing and incorporating materials and equipment into the construction, all as required by the Contract Documents.

Work Directive Change - A written directive to CONTRACTOR, issued on or after the Effective Date of the Agreement and signed by OWNER and recommended by ENGINEER, ordering and addition, deletion or revision in the Work, or responding to differing or unforeseen physical conditions under which the Work is to be performed as provided in paragraph 4.2 or 4.3 or to emergencies under paragraph 6.22. A Work Directive Change may not change the Contract Price or the Contract Time, but is evidence that the parties expect that the change directed or documented by a Work Directive Change will be incorporated in a subsequently issued Change Order following negotiations by the parties as to its effect, if any, on the Contract Price or Contract Time as provided in paragraph 10.2.

Written Amendment - A written amendment of the Contract Documents, signed by OWNER and CONTRACTOR on or after the Effective Date of the Agreement and normally dealing with the nonengineering or nontechnical rather than strictly Work-related aspects of the Contract Documents.

ARTICLE 2 - PRELIMINARY MATTERS

_____-
_____

Delivery of Bonds:

2.1 When CONTRACTOR delivers the executed Agreements to OWNER, CONTRACTOR shall also deliver to OWNER such Bonds as CONTRACTOR may be required to furnish in accordance with paragraph 5.1.

Copies of Documents:

2.2 OWNER shall furnish to CONTRACTOR up to ten copies (unless otherwise specified in the Supplementary Conditions) of the Contract Documents as are reasonably necessary for the execution of the Work. Additional Copies will be furnished, upon request, at the cost of reproduction.

Commencement of Contract Time; Notice to Proceed:

2.3 The Contract Time will commence to run on the thirtieth day after the Effective Date of the Agreement, or, if a Notice to Proceed is given, on the day indicated in the Notice to Proceed. A Notice to Proceed may be given at any time within thirty days after the Effective Date of the Agreement. In no event will the Contract Time commence to run later than the seventy-fifth day after the day of Bid opening or the thirtieth day after the Effective Date of the Agreement, whichever date is earlier.

Starting the Project:

2.4 CONTRACTOR shall start to perform the Work on the date when the Contract Time commences to run, but no Work shall be done at the site prior to the date on which the Contract Time commences to run.

Before Starting Construction:

2.5 Before undertaking each part of the Work, CONTRACTOR shall carefully study and compare the Contract Documents and check and verify pertinent figures shown thereon and all applicable field measurements. CONTRACTOR shall promptly report in writing to ENGINEER any conflict, error or discrepancy which CONTRACTOR may discover and shall obtain a written interpretation or clarification from ENGINEER before proceeding with any Work affected thereby; however, CONTRACTOR shall not be liable to OWNER or ENGINEER for failure to report any conflict, error or discrepancy in the Contract Documents, unless CONTRACTOR had actual knowledge thereof or should reasonably have known thereof.

2.6 Within ten days after the Effective Date of the Agreement (unless otherwise specified in the General Requirements), CONTRACTOR shall submit to ENGINEER for review:

2.6.1 a preliminary Progress Schedule;

2.6.2 a preliminary Schedule of Submittals; and

2.6.3 a preliminary Schedule of Values for all of the Work which includes quantities and prices of items which when added together equal the Contract Price and subdivides the Work into component parts in sufficient detail to serve as the basis for progress payments during performance of the Work. Such prices will include an appropriate amount of

overhead and profit applicable to each item of Work.

2.7 Before any Work at the site is started, CONTRACTOR shall deliver to OWNER, with a copy to ENGINEER, certificates (and other evidence of insurance requested by OWNER) which CONTRACTOR is required to purchase and maintain in accordance with paragraphs 5.3 and 5.4., and OWNER shall deliver to CONTRACTOR certificates (and other evidence of insurance requested by CONTRACTOR) which OWNER is required to purchase and maintain in accordance with paragraphs 5.6 and 5.7.

Preconstruction Conference:

Initial Acceptance of Schedules:

2.8 At least 10 days before submission of the first Application for Payment a conference attended by Contractor, Engineer, and others as appropriate will be held to review for acceptability to Engineer as provided below the schedules submitted in accordance with Paragraph 2.6. Contractor shall have an additional 10 days to make corrections and adjustments and to complete and resubmit the schedules. No progress payment shall be made to Contractor until acceptable schedules are submitted to Engineer.

2.8.1 The Progress Schedule will be acceptable to Engineer if it provides an orderly progression of the Work to completion within the Contract Times. Such acceptance will not impose on Engineer responsibility for the Progress Schedule, for sequencing, scheduling, or progress of the Work nor interfere with or relieve Contractor from Contractor's full responsibility therefor.

2.8.2 Contractor's Schedule of Submittals will be acceptable to Engineer if it provides a workable arrangement for reviewing and processing the required submittals.

2.8.3 Contractor's Schedule of Values will be acceptable to Engineer as to form and substance if it provides a reasonable allocation of the Contract Price to component parts of the Work.

ARTICLE 3 - CONTRACT DOCUMENTS: INTENT, AMENDING, REUSE

_____

Intent:

3.1 The Contract Documents comprise the entire agreement between OWNER and CONTRACTOR concerning the Work. The Contract Documents are complementary; what is called for by one is as binding as if called for by all. The Contract Documents will be construed in accordance with the law of the place of the Project.

3.2 It is the intent of the Contract Documents to describe a functionally complete Project (or part thereof) to be constructed in accordance with the Contract Documents. Any Work, materials or equipment that may reasonably be inferred from the Contract Documents as being required to produce the intended result will be supplied whether or not specifically called for. When words which have a well-known

technical or trade meaning are used to describe Work, materials or equipment such words shall be interpreted in accordance with that meaning. Reference to standard specifications, manuals or codes of any technical society, organization or association, or to the Laws or Regulations of any governmental authority, whether such reference be specific or by implication, shall mean the latest standard specification, manual, code or Laws or Regulations in effect at the time of opening of Bids (or, on the Effective Date of the Agreement if there were no Bids), except as may be otherwise specifically stated. However, no provision of any referenced standard specification, manual or code (whether or not specifically incorporated by reference in the Contract Documents) shall be effective to change the duties and responsibilities of OWNER, CONTRACTOR or ENGINEER, or any of their consultants, agents or employees from those set forth in the Contract Documents, nor shall it be effective to assign to ENGINEER, or any of ENGINEER's consultants, agents or employees, any duty or authority to supervise or direct the furnishing or performance of the Work or any duty or authority to undertake responsibility contrary to the provisions of paragraph 9.15 or 9.16. Clarifications and interpretations of the Contract Documents shall be issued by ENGINEER as provided in paragraph 9.4.

3.3 If, during the performance of the Work, CONTRACTOR finds a conflict, error or discrepancy in the Contract Documents, CONTRACTOR shall so report to ENGINEER in writing at once and before proceeding with the Work affected thereby shall obtain a written interpretation or clarification from ENGINEER; however, CONTRACTOR shall not be liable to OWNER or ENGINEER for failure to report any conflict, error or discrepancy in the Contract Documents unless CONTRACTOR had actual knowledge thereof or should reasonable have known thereof.

Amending and Supplementing Contract Documents:

3.4 The Contract Documents may be amended to provide for additions, deletions and revisions in the Work or to modify the terms and conditions thereof in one or more of the following ways:

3.4.1 a formal Written Amendment,

3.4.2 a Change Order (pursuant to paragraph 10.4), or

3.4.3 a Work Directive Change (pursuant to paragraph 10.1).

As indicated in paragraphs 11.2 and 12.1, Contract Price and Contact Time may only be changed by a Change Order or a Written Amendment.

3.5 In addition, the requirements of the Contract Documents may be supplemented, and minor variations and deviations in the Work may be authorized, in one or more of the followings ways:

3.5.1 a Field Order (pursuant to paragraph 9.5),

3.5.2 ENGINEER's approval of a Shop Drawing or sample (pursuant to paragraphs 6.26 and 6.27), or

3.5.3 ENGINEER's written interpretation or clarification (pursuant to paragraph 9.4).

Reuse of Documents:

3.6 Neither CONTRACTOR nor any Subcontractor or Supplier or other person or organization performing or furnishing any of the Work under a direct or indirect contract with OWNER shall have or acquire any title to or ownership rights in any of the Drawings, Specifications or other documents (or copies of any thereof) prepared by or bearing the seal of ENGINEER; and they shall not reuse any of them on extensions of the Project or any other project without written consent of OWNER and ENGINEER and specific written verification or adaptation by ENGINEER.

ARTICLE 4 - AVAILABILITY OF LANDS; PHYSICAL CONDITIONS; REFERENCE POINTS

_____

Availability of Lands:

4.1 OWNER shall furnish, as indicated in the Contract Documents, the lands upon which the Work is to be performed, rights-of-way and easements for access thereto, and such other lands which are designated for the use of CONTRACTOR. Easements for permanent structures or permanent changes in existing facilities will be obtained and paid for by OWNER, unless otherwise provided in the Contract Documents. If CONTRACTOR believes that any delay in OWNER's furnishing these lands, rights-of-way or easements entitles CONTRACTOR to an extension of the Contract Time, CONTRACTOR may make a claim therefore as provided in Article 12. CONTRACTOR shall provide for all additional lands and access thereto that may be required for temporary construction facilities or storage of materials and equipment.

Physical Conditions:

4.2.1 *Explorations and Reports:* Reference is made to the Supplementary Conditions for identification of those reports of explorations and tests of subsurface conditions at the site that have been utilized by ENGINEER in preparation of the Contract Documents. CONTRACTOR may rely upon the accuracy of the technical data contained in such reports, but not upon nontechnical data, interpretations or opinions contained therein or for the completeness thereof for CONTRACTOR's purposes. Except as indicated in the immediately preceding sentence and in paragraph 4.2.6, CONTRACTOR shall have full responsibility with respect to subsurface conditions at the site.

4.2.2 *Existing Structures:* Reference is made to the Supplementary Conditions for identification of those drawings of physical conditions in or relating to existing surface and subsurface structures (except Underground Facilities referred to in paragraph 4.3) which are at our contiguous to the site that have been utilized by ENGINEER in preparation of the Contract Documents. CONTRACTOR may rely upon the accuracy of the technical data contained in such drawings, but not for the completeness thereof for CONTRACTOR's purposes. Except as indicated in the immediately preceding sentence and in paragraph 4.2.6, CONTRACTOR shall have full responsibility with respect to physical conditions in or relating to such structures.

4.2.3 *Report of Differing Conditions:* If CONTRACTOR believes that:

4.2.3.1 any technical data on which CONTRACTOR is entitled to rely as provided in paragraphs 4.2.1 and 4.2.2 is inaccurate, or

4.2.3.2 any physical condition uncovered or revealed at the site differs materially from that indicated, reflected or referred to in the Contract Documents,

CONTRACTOR shall, promptly after becoming aware thereof and before performing any Work in connection therewith (except in an emergency as permitted by paragraph 6.22), notify OWNER and ENGINEER in writing about the inaccuracy or difference.

4.2.4 *ENGINEER's Review:* ENGINEER will promptly review the pertinent conditions, determine the necessity of obtaining additional explorations or tests with respect thereto and advise OWNER in Writing (with a copy to CONTRACTOR) of ENGINEER's findings and conclusions.

4.2.5 *Possible Document Change:* IF ENGINEER concludes that there is a material error in the Contract Documents or that because of newly discovered conditions a change in the Contract Documents is required, a Work Directive Change or a change Order will be issued as provided in Article 10 to reflect and document the consequences of the inaccuracy or difference.

4.2.6 *Possible Price and Time Adjustments:* In each such case, an increase or decrease in the Contract Price or an extension or shortening of the Contract Time, or any combination thereof, will be allowable to the extent that they are attributable to any such inaccuracy of difference. If OWNER and CONTRACTOR are unable to agree as to the amount or length thereof, a claim may be made therefore as provided in Articles 11 and 12.

Physical Conditions - Underground Facilities:

4.3.1 *Shown or Indicated:* The information and data shown or indicated in the Contract Documents with respect to existing Underground Facilities at or contiguous to the site is based on information and data furnished to OWNER or ENGINEER by the owners of such Underground Facilities or by others. Unless it is otherwise expressly provided in the Supplementary Conditions:

4.3.1.1 OWNER and ENGINEER shall not be responsible for the accuracy or completeness or any such information or data; and,

4.3.1.2 CONTRACTOR shall have full responsibility for reviewing and checking all such information and data, for locating all Underground Facilities shown or indicated in the Contract Documents, for coordination of the Work with the owners of such Underground Facilities during construction, for the safety and protection thereof as provided in paragraph 6.20 and repairing any damage thereto resulting from the Work, the cost of all of which will be considered as having been included in the Contract Price.

4.3.2 *Not Shown or Indicated.* If an Underground Facility is uncovered or revealed at or contiguous to the site which was not shown or indicated in the Contract Documents and which CONTRACTOR could not reasonably have been expected to be aware of,

CONTRACTOR shall, promptly after becoming aware thereof and before performing any Work affected thereby (except in an emergency as permitted by paragraph 6.22), identify the owner of such Underground Facility and give written notice thereof to that owner and to OWNER and ENGINEER. ENGINEER will promptly review the Underground Facility to determine the extent to which the Contract Documents should be modified to reflect and document the consequences of the existence of the Underground Facility, and the Contract Documents will be amended or supplemented to the extent necessary. During such time, CONTRACTOR shall be responsible for the safety and protection of such Underground Facility as provided in paragraph 6.20. CONTRACTOR shall be allowed an increase in the Contract Price or an extension of the Contract Time, or both, to the extent that they are attributable to the extent to the existence of any Underground Facility that was not shown or indicated in the Contract Documents and which CONTRACTOR could not reasonably have been expected to be aware of. If the parties are unable to agree as to the amount or length thereof, CONTRACTOR may make a claim therefore as provided in Articles 11 and 12.

Reference Points:

4.4 OWNER shall provide engineering surveys to establish reference points for construction which in ENGINEER's judgment are necessary to enable CONTRACTOR to proceed with the Work. CONTRACTOR shall be responsible for laying out the Work (unless otherwise specified in the General Requirements), shall protect and preserve the established reference points and shall make no changes or relocations without the prior written approval of OWNER. CONTRACTOR shall report to ENGINEER whenever an reference point is lost or destroyed or requires relocation because of necessary changes in grades or locations, and shall be responsible for the accurate replacement or relocation of such reference points by professionally qualified personnel.

ARTICLE 5 - BONDS AND INSURANCE

_____

Performance and Other Bonds:

5.1 CONTRACTOR shall furnish performance and payment Bonds, each in an amount at least equal to the Contract Price as security for the faithful performance and payment of all CONTRACTOR's obligations under the Contract Documents. These Bonds shall remain in effect at least until one year after the date when final payment becomes due, except as otherwise provided by Law or Regulation or by the Contract Documents. CONTRACTOR shall also furnish such other Bonds as are required by the Supplementary Conditions. All Bonds shall be in the forms prescribed by Law or Regulation or by the Contract Documents and be executed by such sureties as are named in the current list of "Companies Holding Certificates of Authority as Acceptable Sureties on Federal Bonds and as Acceptable Reinsuring Companies" as published in Circular 570 (amended) by the Audit Staff Bureau of Accounts, U.S. Treasury Department. All Bonds signed by an agent must be accompanied by a certified copy of the authority to act.

5.2 If the surety on any Bond furnished by CONTRACTOR is declared a bankrupt or becomes insolvent or its right to do business

is terminated in any state where any part of the Project is located or it ceases to meet the requirements of paragraph 5.1, CONTRACTOR shall within five days thereafter substitute another Bond and Surety, both of which must be acceptable to OWNER.

Contractor's Liability Insurance:

5.3 CONTRACTOR shall purchase and maintain such comprehensive general liability and other insurance as is appropriate for the Work being performed and furnished and as will provide protection from claims set forth below which may arise out of or result from CONTRACTOR's performance and furnishing of the Work and CONTRACTOR's other obligations under the Contract Documents, whether it is to be performed or furnished by CONTRACTOR, by any Subcontractor, by anyone directly or indirectly employed by any of them to perform or furnish any of the Work, or by anyone for whose acts any of them may be liable.

5.3.1 Claims under workers' or workmen's compensation, disability benefits and other similar employee benefit acts;

5.3.2 Claims for damages because of bodily injury occupational sickness or disease, or death on CONTRACTOR's employees;

5.3.3 Claims for damages because of bodily injury, sickness or disease, or death of any person other than CONTRACTOR's employees;

5.3.4 Claims for damages insured by personal injury liability coverage which are sustained (a) by any person as a result of an offense directly or indirectly related to the employment of such person by CONTRACTOR, or (b) by any other person for any other reason;

5.3.5 Claims for damages, other than to the Work itself, because of injury to or destruction of tangible property wherever located, including loss of use resulting there from;

5.3.6 Claims arising our of operation of Laws or Regulations for damages because of bodily injury or death of any person or for damage to property; and

5.3.7 Claims for damages because of bodily injury or death of any person or property damage arising out of the ownership, maintenance or use of any motor vehicle.

The insurance required by this paragraph 5.3 shall include the specific coverages and be written for not less than the limits of liability and coverages provided in the Supplementary Conditions, or required by law, whichever is greater. The comprehensive general liability insurance shall include completed operations insurance. All of the policies of insurance so required to be purchased and maintained (or the certificates or other evidence thereof) shall contain a provision or endorsement that the coverage afforded will not be canceled, materially changed or renewal refused until at least thirty days' prior written notice has been given to OWNER and ENGINEER by certified mail. All such insurance shall remain in effect until final payment and at all times

thereafter when CONTRACTOR may be correcting, removing or replacing *defective* Work in accordance with paragraph 13.12. In addition, CONTRACTOR shall maintain such completed operations insurance for at least two years after final payment and furnish OWNER and with evidence of continuation of such insurance at final payment and one year thereafter.

Contractual Liability Insurance:

5.4 The comprehensive general liability insurance required by paragraph 5.3 will include contractual liability insurance applicable to CONTRACTOR's obligations under paragraphs 6.30 and 6.31.

Owner's Liability Insurance:

5.5 OWNER shall be responsible for purchasing and maintaining OWNER's own liability insurance and, at OWNER's option, may purchase and maintain such insurance as will protect OWNER against claims which may arise from operations under the Contract Documents.

Property Insurance:

5.6 Unless otherwise provided in the Supplementary Conditions, CONTRACTOR shall purchase and maintain property insurance upon the Work at the site to the full insurable value thereof (subject to such deductible amounts as may be provided in the Supplementary Conditions or required by Laws and Regulations). This insurance shall include the interests of OWNER, CONTRACTOR, Subcontractors, ENGINEER and ENGINEER's consultants in the Work, all of whom shall be listed as insured or additional insured parties, shall insure against the perils of fire and extended coverage and shall include "all risk" insurance for physical loss and damage including theft, vandalism and malicious mischief, collapse and water damage, and such other perils as may be provided in the Supplementary Conditions, and shall include damages, losses and expenses arising out of or resulting from any insured loss or incurred in the repair or replacement of any insured property (including but not limited to fees and charges of engineers, architects, attorneys and other professionals). If not covered under the "all risk" insurance or otherwise provided in the Supplementary Conditions, CONTRACTOR shall purchase and maintain similar property insurance on portions of the Work stored on and off the site or in transit when such portions of the Work are to be included in an Application for Payment.

5.7 OWNER shall purchase and maintain such boiler and machinery insurance or additional property insurance as may be required by the Supplementary Conditions or Laws and Regulations which will include the interests of OWNER, CONTRACTOR, Subcontractors, ENGINEER and ENGINEER's consultants in the Work, all of whom shall be listed as insured or additional insured parties.

5.8 All the policies of insurance (or the certificates or other evidence thereof) required to be purchased and maintained by CONTRACTOR in accordance with paragraphs 5.6 and 5.7 will contain a provision or endorsement that the coverage afforded will not be canceled or materially changed or renewal refused until at least thirty days' prior written notice has been given to OWNER by certified mail and will contain waiver provisions in accordance with para

graph 5.11.2.

5.9 OWNER shall not be responsible for purchasing and maintaining any property insurance to protect the interests of CONTRACTOR, Subcontractors or others in the Work to the extent of any deductible amounts that are provided in the Supplementary Conditions. The risk of loss within the deductible amount, will be borne by CONTRACTOR, Subcontractor or others suffering any such loss and if any of them wishes property insurance coverage within the limits of such amounts, each may purchase and maintain it at the purchaser's own expense.

5.10 If OWNER requests in writing that other special insurance be included in the property insurance policy, CONTRACTOR shall, if possible, include such insurance, and the cost thereof will be charged to CONTRACTOR by appropriate Change Order or Written Amendment. Prior to commencement of the Work at the site, CONTRACTOR shall in writing advise OWNER whether or not such other insurance has been procured by CONTRACTOR.

Waiver of Rights:

5.11.1 OWNER and CONTRACTOR waive all rights against each other for all losses and damages caused by any of the perils covered by the policies of insurance provided in response to paragraphs 5.6 and 5.7 and any other property insurance applicable to the Work, and also waive all such rights against the Subcontractors, ENGINEER, ENGINEER's consultants and all other parties names as insured in such policies for losses and damages so caused. As required by paragraph 6.11, each subcontract between CONTRACTOR and a Subcontractor will contain similar waiver provisions by the Subcontractor in favor of OWNER, CONTRACTOR, ENGINEER, ENGINEER's consultants and all other parties named as insured. None of the above waivers shall extend to the rights that any of the insured parties may have to the proceeds of insurance held by OWNER as trustee or otherwise payable under any policy so issued.

5.11.2 OWNER and CONTRACTOR intend that any policies provided in response to paragraphs 5.6 and 5.7 shall protect all of the parties insured and provide primary coverage for all losses and damages caused by the perils covered thereby. Accordingly, all such policies shall contain provisions to the effect that in the event of payment of any loss or damage the insurer will have no rights of recovery against any of the parties named as insureds or additional insureds, and if the insurers require separate waiver forms to be signed by ENGINEER or ENGINEER's consultant OWNER will obtain the same, and if such waiver forms are required of any Subcontractor, CONTRACTOR will obtain the same.

Receipt and Application of Proceeds:

5.12 Any insured loss under the policies of insurance required by paragraphs 5.6 and 5.7 will be adjusted with OWNER and made payable to OWNER as trustee for the insureds, as their interests may appear, subject to the requirements of any applicable mortgage clause and of paragraph 5.13. OWNER shall deposit in a separate account any money so received, and shall distribute it in accordance with such agreement as the parties in interest may reach. If no other special agreement is reached the damaged Work shall be repaired or replaced, the

moneys so received applied on account thereof and the Work and the cost thereof covered by an appropriate Change Order or Written Amendment.

5.13 OWNER as trustee shall have power to adjust and settle any loss with the insurers unless one of the parties in interest shall object in writing within fifteen days after the occurrence of loss to OWNER's exercise of this power. If such objection be made, OWNER as trustee shall make settlement with the insurers in accordance with such agreement as the parties in interest may reach. If required in writing by any party in interest, OWNER as trustee shall, upon the occurrence of an insured loss, give bond for the proper performance of such duties.

Acceptance of Insurance:

5.14 If OWNER has any objection to the coverage afforded by or other provisions of the insurance required to be purchased and maintained by CONTRACTOR in accordance with paragraphs 5.3 and 5.4 on the basis of its not complying with the Contract Documents, OWNER shall notify CONTRACTOR in writing thereof within ten days of the date of delivery of such certificates to OWNER in accordance with paragraph 2.7. If CONTRACTOR has any objection to the coverage afforded by or other provisions of the policies of insurance required to be purchased and maintained by OWNER in accordance with paragraphs 5.6 and 5.7 on the basis of their not complying with the Contract Documents, CONTRACTOR shall notify OWNER in writing thereof within ten days of the date of delivery of such certificates to CONTRACTOR in accordance with paragraph 2.7 OWNER and CONTRACTOR shall each provide to the other such additional information in respect of insurance provided by each as the other may reasonably request. Failure by OWNER or CONTRACTOR to give any such notice of objection within the time provided shall constitute acceptance of such insurance purchased by the other as complying with the Contract Documents.

Partial Utilization - Property Insurance:

5.15 If OWNER finds it necessary to occupy or use a portion or portions of the Work prior to Substantial Completion of all the Work, such use or occupancy may be accomplished in accordance with paragraph 14.10; provided that no such use or occupancy shall commence before the insurers providing the property insurance have acknowledge notice thereof and in writing effected the changes in coverage necessitated thereby. The insurers providing the property insurance shall consent by endorsement on the policy or policies, but the property insurance shall not be canceled or lapse on account of any such partial use or occupancy.

ARTICLE 6 - CONTRACTOR'S RESPONSIBILITIES

_____

Supervision and Superintendence:

6.1 CONTRACTOR shall supervise and direct the Work competently and efficiently, devoting such attention thereto and applying such skills and expertise as may be necessary to perform the Work in accordance with the Contract Documents. CONTRACTOR shall be solely responsible for the means, methods, techniques, sequences and procedures of construction, but CONTRACTOR shall not be

responsible for the negligence of others in the design or selection of a specific means, method, technique, sequence or procedure of construction which is indicated in and required by the Contract Documents. CONTRACTOR shall be responsible to see that the finished Work complies accurately with the Contract Documents.

6.2 CONTRACTOR shall keep on the Work at all times during its progress a competent resident superintendent, who shall not be replaced without written notice to OWNER and ENGINEER except under extraordinary circumstances. The superintendent will be CONTRACTOR's representative at the site and shall have authority to act on behalf of CONTRACTOR. All communications given to the superintendent shall be as binding as if given to CONTRACTOR.

Labor, Materials and Equipment:

6.3 CONTRACTOR shall provide competent, suitably qualified personnel to survey and lay out the Work and perform construction as required by the Contract Documents. CONTRACTOR shall at all times maintain good discipline and order at the site. Except in connection with the safety or protection of persons or the Work or property at the site or adjacent thereto, and except as otherwise indicated in the Contract Documents, all Work at the site shall be performed during regular working hours, and CONTRACTOR will not permit overtime work or the performance of Work on Saturday, Sunday or any legal holiday without OWNER's written consent give after prior written notice to ENGINEER.

6.4 Unless otherwise specified in the General Requirements, CONTRACTOR shall furnish and assume full responsibility for all materials, equipment, labor, transportation, construction equipment and machinery, tools, appliances, fuel, power, light, heat, telephone, water sanitary facilities, temporary facilities and all other facilities and incidentals necessary for the furnishing, performance, testing, start-up and completion of the Work.

6.5 All materials and equipment shall be of good quality and new, except as otherwise provided in the Contract Documents. If required by ENGINEER, CONTRACTOR shall furnish satisfactory evidence (including reports of required tests) as to the kind and quality of materials and equipment. All materials and equipment shall be applied, installed, connected, erected, used, cleaned and conditioned in accordance with the instruction of the applicable Supplier except as otherwise provided in the Contract Documents; but no provision of any such instructions will be effective to assign to ENGINEER, or any of ENGINEER's consultants, agents or employees, any duty or authority to supervise or direct the furnishing or performance of the Work or any duty or authority to undertake responsibility contrary to the provisions of paragraph 9.15 or 9.16.

Adjusting Progress Schedule:

6.6 CONTRACTOR shall submit to ENGINEER for acceptance (to the extent indicated in paragraph 2.9) adjustments in the progress schedule to reflect the impact thereon of new developments; these will conform generally to the progress schedule then in effect and additionally will comply with any provisions of the General Requirements applicable thereto.

Substitutes or "Or-Equal" Items:

6.7.1 Whenever materials or equipment are specified or described in the Contract Documents by using the name of a proprietary item or the name of a particular Supplier the naming of the item is intended to establish the type, function and quality required. In the case where the name is followed by words indicating that substitutions/ "or equals" are permitted, materials or equipment of other Suppliers may be accepted by ENGINEER if sufficient information is submitted by BIDDER to allow ENGINEER to determine that the material or equipment proposed is equivalent or equal to that named. The procedure for review by ENGINEER will include the following as supplemented in the General Requirements. Requests for review of substitute/ "or-equal" items of material and equipment will not be accepted by ENGINEER from anyone other than BIDDER. If BIDDER wishes to furnish or use a substitute/ "or-equal" item of material or equipment, BIDDER shall make written application to ENGINEER for acceptance thereof, certifying that the proposed substitute/ "or-equal" or will perform adequately the functions and achieve the results called for by the general design, be similar and of equal substance to that specified and be suited to the same use as that specified. The application will state that the evaluation and acceptance of the proposed substitute/ "or-equal" item will not prejudice BIDDER'S achievement of Substantial Completion on time, whether or not acceptance of the substitute/ "or-equal" item for use in the Work will require a change in any of the Contract Documents (or in the provisions of any other direct contract with OWNER for work on the Project) to adapt the design to the proposed item and whether or not incorporation or use of the item in connection with the Work is subject to payment of any license fee or royalty. All variations of the proposed substitute/ "or-equal" item from that specified will be identified in the application and available maintenance repair and replacement service will be indicated. The application will also contain an itemized estimate of all costs that will result directly or indirectly from acceptance of such item, including costs for redesign and claims of other contractors affected by the resulting change, all of which shall be considered by ENGINEER in evaluating the proposed substitute/ "or-equal" item. ENGINEER may require BIDDER to furnish at BIDDER'S expense additional data about the proposed substitute/ "or-equal" item.

6.7.2 If a specific means, method, technique, sequence or procedure of construction is indicated in or required by the Contract Documents, BIDDER may furnish or utilize a substitute/ "or-equal" means, method, sequence, technique or procedure of construction acceptable to ENGINEER, if BIDDER submits sufficient information to allow ENGINEER to determine that the substitute/ "or-equal" item proposed is equivalent to that indicated or required by the Contract Documents. The procedure for review by ENGINEER will be similar to that provided in paragraph 6.7.1 as applied by ENGINEER and as may be supplemented in the General Requirements.

6.7.3 ENGINEER will be allowed a reasonable time within which to evaluate each proposed substitute/ "or equal" item. ENGINEER will be the sole judge of acceptability, and no item will be ordered, installed or utilized without ENGINEER's prior written acceptance which will be evidenced by either a Change Order or an approved Shop

Drawing. OWNER may require BIDDER to furnish at BIDDER's expense a special performance guarantee or other surety with respect to any substitute/ "or-equal" item. ENGINEER will record time required by ENGINEER and ENGINEER's consultants in evaluating items proposed by BIDDER and in making changes in the Contract Documents occasioned thereby. Whether or not ENGINEER accepts a proposed substitute/ "or-equal" item, BIDDER shall reimburse OWNER for the charges of ENGINEER and ENGINEER's consultants for evaluating each proposed item.

Concerning Subcontractors, Suppliers and Others:

6.8.1 CONTRACTOR shall not employ any Subcontractor, Supplier or other person or organization (including those acceptable to OWNER and ENGINEER as indicated in paragraph 6.8.2), whether initially or as a substitute, against whom OWNER or ENGINEER may have reasonable objection. CONTRACTOR shall not be required to employ any Subcontractor, Supplier or other person or organization to furnish or perform any of the Work against whom CONTRACTOR has reasonable objection.

6.8.2 If the Supplementary Conditions require the identity of certain Subcontractors, Suppliers or other persons or organizations (including those who are to furnish the principal items of materials and equipment) to be submitted to OWNER in advance of the specified date prior to the Effective Date of the Agreement for acceptance by OWNER and ENGINEER and if CONTRACTOR has submitted a list thereof in accordance with the Supplementary Conditions, OWNER's or ENGINEER's acceptance (either in writing or by failing to make written objection thereto by the date indicated for acceptance or objection in the bidding documents or the Contract Documents) of any such Subcontractor, Supplier or other person or organization so identified may be revoked on the basis of reasonable objection after due investigation, in which case CONTRACTOR shall submit an acceptable substitute/ "or-equal" item, the Contract Price will be increased by the difference in the cost occasioned by such substitution and an appropriate Change Order will be issued or Written Amendment signed. No acceptance by OWNER or ENGINEER of any such Subcontractor, Supplier or other person or organization shall constitute a waiver of any right of OWNER or ENGINEER to reject *defective* Work.

6.9 CONTRACTOR shall be fully responsible to OWNER and ENGINEER for all acts and omissions of the Subcontractors, Suppliers and other persons and organization performing or furnishing any of the Work under a direct or indirect contract with CONTRACTOR just as CONTRACTOR is responsible for CONTRACTOR's own acts and omissions. Nothing in the Contract Documents shall create any contractual relationship between OWNER or ENGINEER and any such Subcontractor, Supplier or other person or organization, nor shall it create any obligation on the part of OWNER or ENGINEER to pay or to see to the payment of any moneys due any such Subcontractor, Supplier or other person or organization except as may other wise be required by Laws and Regulations.

6.10 The divisions and sections of the Specifications and the identifications of any Drawings shall not control CONTRACTOR in dividing the Work among Subcontractors or Suppliers or delineating the Work to be

performed by any specific trade.

6.11 All Work performed for CONTRACTOR by a Subcontractor will be pursuant to an appropriate agreement between CONTRACTOR and the Subcontractor which specifically binds the Subcontractor to the applicable terms and conditions of the Contract Documents for the benefit of OWNER and ENGINEER and contains waiver provisions as required by paragraph 5.11. CONTRACTOR shall pay each Subcontractor a just share of any insurance moneys received by CONTRACTOR on account of losses under policies issued pursuant to paragraphs 5.6 and 5.7.

Patent Fees and Royalties:

6.12 CONTRACTOR shall pay all license fees and royalties and assume all costs incident to the use in the performance of the Work or the incorporation in the Work of any invention, design, process, product or device which is the subject of patent rights or copyrights held by others. If a particular invention, design process, product or device is specified in the Contract Documents for use in the performance of the Work and if to the actual knowledge of OWNER or ENGINEER its use is subject to patent rights or copyrights calling for the payment of any license fee or royalty to others, the existence of such rights shall be disclosed by OWNER in the Contract Documents. CONTRACTOR shall indemnify and hold harmless OWNER and ENGINEER and anyone directly or indirectly employed by either of them from and against all claims, damages, losses and expenses (including attorneys' fees and court and arbitration costs) arising our of any infringement of patent rights or copyrights incident to the use in the performance of the Work or resulting from the incorporation in the Work of any invention, design, process, product or device not specified in the Contract Documents, and shall defend all such claims in connection with any alleged infringement of such rights.

Permits:

6.13 Unless otherwise provided in the Supplementary Conditions, CONTRACTOR shall obtain and pay for all construction permits and licenses. OWNER shall assist CONTRACTOR, when necessary, in obtaining such permits and licenses. CONTRACTOR shall pay all governmental charges and inspection fees necessary for the prosecution of the Work, which are applicable at the time of opening the Bids, or if there are no Bids on the Effective Date of the Agreement. CONTRACTOR shall pay all charges of utility owners for connections to the Work, and OWNER shall pay all charges of such utility owners for capital costs related thereto such as plant investment fees.

Laws and Regulations:

6.14.1 CONTRACTOR shall give all notices and comply with all Laws and Regulations applicable to furnishing and performance of the Work. Except where otherwise expressly required by applicable Laws and Regulations, neither OWNER nor ENGINEER shall be responsible for monitoring CONTRACTOR's compliance with any Laws or Regulations.

6.14.2 If CONTRACTOR observes that the Specifications or Drawings are at variance with any Laws or Regulations, CONTRACTOR shall give ENGINEER prompt written notice thereof, and any necessary changes will be authorized by one of the methods indicated

in paragraph 3.4. If CONTRACTOR performs any Work knowing or having reason to know that it is contrary to such Laws or Regulations, and without such notice to ENGINEER, CONTRACTOR shall bear all costs arising there from; however, it shall not be CONTRACTOR's primary responsibility to make certain that the Specifications and Drawings are in accordance with such Laws and Regulations.

Taxes:

6.15 CONTRACTOR shall pay all sales, consumer, use and other similar taxes required to be paid by CONTRACTOR in accordance with the Laws and Regulations of the place of the Project which are applicable during the performance of the Work.

Use of Premises:

6.16 CONTRACTOR shall confine construction equipment, the storage of materials and equipment and the operations of workers to the Project site and land and areas identified in and permitted by the Contract Documents and other land and areas permitted by Laws and Regulations, rights-of-way, permits and easements, and shall not unreasonably encumber the premises which construction equipment or other materials or equipment. CONTRACTOR shall assume full responsibility for any damage to any such land or area, or to the owner or occupant thereof or of any land or areas contiguous thereto, resulting from the performance of the Work. Should any claim be made against OWNER or ENGINEER by any such owner or occupant because of the performance of the Work, CONTRACTOR shall promptly attempt to settle with such other party by agreement or otherwise resolve the claim by arbitration or at law. CONTRACTOR shall, to the fullest extent permitted by Laws and Regulations, indemnify and hold OWNER and ENGINEER harmless from and against all claims damages, losses and expenses (including, but not limited to fees or engineers, architects, attorneys and other professionals and court and arbitration costs) arising directly, indirectly or consequentially out of any action, legal or equitable, brought by any such other party against OWNER or ENGINEER to the extent based on a claim arising out of CONTRACTOR's performance of the Work.

6.17 During the progress of the Work, CONTRACTOR shall keep the premises free from accumulations of waste materials, rubbish and other debris resulting from the Work. At the completion of the Work CONTRACTOR shall remove all waste materials, rubbish and debris from and about the premises as well as all tools, appliances, construction equipment and machinery, and surplus materials, and shall leave the site clean and ready for occupancy by OWNER. CONTRACTOR shall restore to original condition all property not designated for alteration by the Contract Documents.

6.18 CONTRACTOR shall not load nor permit any part of any structure to be loaded in any manner that will endanger the structure, nor shall CONTRACTOR subject any part of the Work or adjacent property to stresses or pressures that will endanger it.

Record Documents:

6.19 CONTRACTOR shall maintain in a safe place at the site one record copy of all Drawings, Specifications, Addenda, Written Amendments, Change Orders, Work Directive

Changes, Field Orders and written interpretations and clarifications (issued pursuant to paragraph 9.4) in good order and annotated to show all changes made during construction. These record documents together with all approved samples and a counterpart of all approved Shop Drawings will be available to ENGINEER for reference. Upon completion of the Work, these record documents, samples and Shop Drawings will be delivered to ENGINEER for OWNER.

Safety and Protection:

6.20 CONTRACTOR shall be responsible for initiating, maintaining and supervising all safety precautions and programs in connection with the Work. CONTRACTOR shall take all necessary precautions for the safety of, and shall provide the necessary protection to prevent damage, injury or loss to:

6.20.1 all employees on the Work and other persons and organizations who may be affected thereby:

6.20.2 all the Work and materials and equipment to be incorporated therein, whether in storage on or off the site; and

6.20.3 other property at the site or adjacent thereto, including trees, shrubs, lawns, walks, pavements, roadways, structures, utilities and Underground Facilities not designated for removal, relocation or replacement in the course of construction.

CONTRACTOR shall comply with all applicable Laws and Regulations of any public body (Including OSHA) having jurisdiction for the safety of persons or property or to protect them from damage, injury or loss; and shall erect and maintain all necessary safeguards for such safety and protection. CONTRACTOR shall notify owners of adjacent property and of Underground Facilities and utility owners when prosecution of the Work may affect them, and shall cooperate with them in the protection, removal, relocation and replacement of their property. All damage, injury or loss to any property referred to in paragraph 6.20.2 or 6.20.3 caused, directly or indirectly, in whole or in part, by CONTRACTOR, any Subcontractor, Supplier or any other person or organization directly or indirectly employed by any of them to perform or furnish any of the Work or anyone for whose acts any of them may be liable, shall be remedied by CONTRACTOR (except damage or loss attributable to the fault of Drawings or Specifications or to the acts or omissions of OWNER or ENGINEER or anyone employed by either of them or anyone for whose acts either of them may be liable, and not attributable, directly or indirectly, in whole or in part, to the fault or negligence of CONTRACTOR). CONTRACTOR's duties and responsibilities for the safety and protection of the Work shall continue until such time as all the Work is completed and Engineer has issued a notice to OWNER and CONTRACTOR in accordance with paragraph 14.13 that the Work is acceptable (except as otherwise expressly provided in connection with Substantial Completion).

6.21 CONTRACTOR shall designate a responsible representative at the site whose duty shall be the prevention of accidents. This person shall be CONTRACTOR's superintendent unless otherwise designated in writing by CONTRACTOR to OWNER.

Emergencies:

6.22 In emergencies affecting the safety or protection of persons or the Work or property at the site or adjacent thereto, CONTRACTOR, without special instruction or authorization from ENGINEER or OWNER, is obligated to act to prevent threatened damage, injury or loss. CONTRACTOR shall give ENGINEER prompt written notice if CONTRACTOR believes that any significant changes in the Work or variations from the Contract Documents have been caused thereby. If ENGINEER determines that a change in the Contract Documents is required because of the action taken in response to an emergency, a Work Directive Change or Change Order will be issued to document the consequences of the changes or variations.

Shop Drawings and Samples:

6.23 After checking and verifying all field measurements and after complying with applicable procedures specified in the General Requirements, CONTRACTOR shall submit to ENGINEER for review and approval in accordance with the accepted schedule of Shop Drawing submissions (see paragraph 2.9), or for other appropriate action if so indicated in the Supplementary Conditions, five copies (unless otherwise specified in the General Requirements) of all Shop Drawings, which will bear a stamp or specific written indication that CONTRACTOR has satisfied CONTRACTOR's responsibilities under the Contract Documents with respect to the review submission. All submissions will be identified as ENGINEER may require. The data shown on the Shop Drawings will be complete with respect to quantities, dimensions, specified performance and design criteria, materials and similar data to enable ENGINEER to review the information as required.

6.24 CONTRACTOR shall also submit to ENGINEER for review and approval with such promptness as to cause no delay in Work, all samples required by the Contract Documents. All samples will have been checked by and accompanied by a specific written indication that CONTRACTOR has satisfied CONTRACTOR's responsibilities under the Contract Documents with respect to the review of the submission and will be identified clearly as to material, Supplier, pertinent data such as catalog numbers and the use for which intended.

6.25.1 Before submission of each Shop Drawing or sample CONTRACTOR shall have determined and verified all quantities, dimensions, specified performance criteria, installation requirements, materials, catalog numbers and similar data with respect thereto and reviewed or coordinated each Shop Drawing or sample with other Shop Drawings and samples and with the requirements of the Work and the Contract Documents.

6.25.2 At the time of each submission, CONTRACTOR shall give ENGINEER specific written notice of each variation that the Shop Drawings or samples may have from the requirements of the Contract Documents, and, in addition, shall cause a specific notation to be made on each Shop Drawing submitted to ENGINEER for review and approval of each such variation.

6.26 ENGINEER will review and approve with reasonable promptness Shop Drawings

and samples, but ENGINEER's review and approval will be only for conformance with the design concept of the Project and for compliance with the information given in the Contract Documents and shall not extend to means, methods, techniques, sequences or procedures of construction (except where a specific means, method, technique, sequence or procedure of construction is indicated in or required by the Contract Documents) or to safety precautions or programs incident thereto. The review and approval of a separate item as such will not indicate approval of the assembly in which the item functions. CONTRACTOR shall make corrections required by ENGINEER, and shall return the required number of corrected copies of Shop Drawings and submit as required new samples for review and approval. CONTRACTOR shall direct specific attention in writing to revisions other than the corrections called for by ENGINEER on previous submittals.

6.27 ENGINEER's review and approval of Shop Drawings or samples shall not relieve CONTRACTOR from responsibility for any variation from the requirements of the Contract Documents unless CONTRACTOR has in writing called ENGINEER's attention to each such variation at the time of submission as required by paragraph 6.25.2 and ENGINEER has given written approval of each such variation by a specific written notation thereof incorporated in or accompanying the Shop Drawing or sample approval; nor will any approval by ENGINEER relieve CONTRACTOR from responsibility for errors or omissions in the Shop Drawings or from responsibility for having complied with the provisions of paragraph 6.25.1.

6.28 Where a Shop Drawing or sample is required by the Specifications, any related Work performed prior to ENGINEER's review and approval of the pertinent submission will be the sole expense and responsibility of CONTRACTOR.

Continuing the Work:

6.29 CONTRACTOR shall carry on the Work and adhere to the progress schedule during all disputes or disagreements with OWNER. No Work shall be delayed or postponed pending resolution of any disputes or disagreements, except as permitted by paragraph 15.5 or as CONTRACTOR and OWNER may otherwise agree in writing.

Indemnification:

6.30 To the fullest extent permitted by Laws and Regulations CONTRACTOR shall indemnify and hold harmless OWNER and ENGINEER and their consultants, agents and employees from and against all claims, damages, losses and expenses, direct, indirect or consequential (including but not limited to fees and charges of engineers, architects, attorneys and other professionals and court and arbitration costs) arising out of or resulting from the performance of the Work, provided that any such claim, damage, loss or expense (a) is attributable to bodily injury, sickness, disease or death, or to injury to or destruction of tangible property (other than the Work itself) including the loss of use resulting there from and (b) is caused in whole or in part by an negligent act or omission of CONTRACTOR, any Subcontractor, any person or organization directly or indirectly employed by any of them to perform or furnish any of the Work or anyone for whose acts any of them may be liable, regardless of whether or not it is caused in

part by a party indemnified hereunder or arises by or is imposed by Law and Regulations regardless of the negligence of any such party.

6.31 In any and all claims against OWNER or ENGINEER or any of their consultants, agents or employees by any employee of CONTRACTOR, any Subcontractor, any person or organization directly or indirectly employed by any of them to perform or furnish any of the Work or anyone for whose acts any of them may be liable, the indemnification obligation under paragraph 6.30 shall not be limited in any way by any limitation on the amount or type of damages, compensation or benefits payable by or for CONTRACTOR or any such Subcontractor or other person or organization under workers' or workmen's compensation acts, disability benefit acts or other employee benefit acts.

6.32 The obligations of CONTRACTOR under paragraph 6.30 shall not extend to the liability of ENGINEER, ENGINEER's consultants, agents or employees arising out of the preparation or approval of maps, drawings, opinions, reports, surveys, Change Orders, designs or specifications.

ARTICLE 7 - OTHER WORK

_____

Related Work at Site:

7.1 OWNER may perform other work related to the Project at the site by OWNER's own forces, have other work performed by utility owners or let other direct contracts therefore which shall contain General Conditions similar to these. If the fact that such other work is to be performed was not noted in the Contract Documents, written notice thereof will be given to CONTRACTOR prior to starting any such other work; and, if CONTRACTOR believes that such performance will involve additional expense to CONTRACTOR or requires additional time and the parties are unable to agree as to the extent thereof, CONTRACTOR may make a claim therefore as provided in Articles 11 and 12.

7.2 CONTRACTOR shall afford each utility owner and other contractor who is a party to such a direct contract (or OWNER, if OWNER is performing the additional work with OWNER's employees) proper and safe access to the site and a reasonable opportunity for the introduction and storage of materials and equipment and the execution of such work, and shall properly connect and coordinate the Work with theirs. CONTRACTOR shall do all cutting, fitting and patching of the Work that may be required to make its several parts come together properly and integrate with such other work. CONTRACTOR shall not endanger any work of others by cutting, excavating or otherwise altering their work and will only cut or alter their work with the written consent of ENGINEER and the others whose work will be affected. The duties and responsibilities of CONTRACTOR under this paragraph are for the benefit of such utility owners and other contractors to the extent that there are comparable provisions for the benefit of CONTRACTOR in said direct contracts between OWNER and such utility owners and other contractors.

7.3 If any part of CONTRACTOR's Work depends for proper execution or results upon the work of any such other contractor or utility owner (or OWNER), CONTRACTOR shall inspect and promptly report to ENGINEER in

writing any delays, defects or deficiencies in such work that render it unavailable or unsuitable for such proper execution and results. CONTRACTOR's failure so to report will constitute an acceptance of the other work as fit and proper for integration with CONTRACTOR's Work except for latent or nonapparent defects and deficiencies in the other work.

Coordination:

7.4 If OWNER contracts with others for the performance of other work on the Project at the site, the person or organization who will have authority and responsibility for coordination of the activities among the various prime contractors will be identified in the Supplementary Conditions, and the specific matters to be covered by such authority and responsibility will be itemized, and the extent of such authority and responsibilities will be provided in the Supplementary Conditions. Unless otherwise provided in the Supplementary Conditions, neither OWNER nor ENGINEER shall have any authority or responsibility in respect of such coordination.

ARTICLE 8 - OWNER'S RESPONSIBILITIES

8.1 OWNER shall issue all communications to CONTRACTOR through ENGINEER.

8.2 In case of termination of the employment of ENGINEER, OWNER shall appoint an engineer against whom CONTRACTOR makes no reasonable objection, whose status under the Contract Documents shall be that of the former ENGINEER. Any dispute in connection with such appointment shall be subject to arbitration.

8.3 OWNER shall furnish the data required of OWNER under the Contract Documents promptly and shall make payments to CONTRACTOR promptly after they are due as provided in paragraphs 14.4 and 14.13.

8.4 OWNER's duties in respect of providing lands and easements and providing engineering surveys to establish reference points are set forth in paragraphs 4.1 and 4.4. Paragraph 4.2 refers to OWNER's identifying and making available to CONTRACTOR copies of reports of explorations and tests of subsurface conditions at the site and in existing structures which have been utilized by ENGINEER in preparing the Drawings and Specifications.

8.5 OWNER's responsibilities in respect of purchasing and maintaining liability and property insurance are set forth in paragraphs 5.5 through 5.8.

8.6 OWNER is obligated to execute Change Orders as indicated in paragraph 10.4.

8.7 OWNER's responsibility in respect of certain inspections, tests and approvals is set forth in paragraph 13.4.

8.8 In connection with OWNER's right to stop Work or suspend Work, see paragraphs 13.10 and 15.1 Paragraph 15.2 deals with OWNER's right to terminate services of CONTRACTOR under certain circumstances.

ARTICLE 9 - ENGINEER'S STATUS DURING CONSTRUCTION

Owner's Representative:

9.1 ENGINEER will be OWNER's representative during the construction period. The duties and responsibilities and the limitations of authority of ENGINEER as OWNER's representative during construction are set forth in the Contract Documents and shall not be extended without written consent of OWNER and ENGINEER.

Visits to Site:

9.2 ENGINEER will make visits to the site at intervals appropriate to the various stages of construction to observe the progress and quality of the executed Work and to determine, in general, if the Work is proceeding in accordance with the Contract Documents. ENGINEER will not be required to make exhaustive or continuous on-site inspections to check the quality or quantity of the Work. ENGINEER's efforts will be directed toward providing for OWNER a greater degree of confidence that the completed Work will conform to the Contract Documents. On the basis of such visits and on-site observations as an experienced and qualified design professional, ENGINEER will keep OWNER informed of the progress of the Work and will endeavor to guard OWNER against defects and deficiencies in the Work.

Project Representation:

9.3 If OWNER and ENGINEER agree, ENGINEER will furnish a Resident Project Representative to assist ENGINEER in observing the performance of the Work. The duties, responsibilities and limitations of authority of any such Resident Project Representative and assistants will be as provided in the Supplementary Conditions. If OWNER designates another agent to represent OWNER at the site who is not ENGINEER's agent or employee, the duties, responsibilities and limitations of authority of such other person will be as provided in the Supplementary Conditions.

Clarifications and Interpretation:

9.4 ENGINEER will issue with reasonable promptness such written clarifications or interpretations of the requirements of the Contract Documents (in the form of Drawings or otherwise) as ENGINEER may determine necessary, which shall be consistent with or reasonably inferable from the overall intent of the Contract Documents. If CONTRACTOR believes that a written clarification or interpretation justifies an increase in the Contract Price or an extension of the Contract Time and the parties are unable to agree to the amount or extent thereof, CONTRACTOR may make a claim therefore as provided in Article 11 or Article 12.

Authorized Variations in Work:

9.5 ENGINEER may authorize minor variations in the Work from the requirements of the Contract Documents which do not involve as adjustment in the Contract Price or the Contract Time and are consistent with the overall intent of the Contract Documents. These may be accomplished by a Field Order

and will be binding on OWNER, and also on CONTRACTOR who shall perform the Work involved promptly. If CONTRACTOR believes that a Field Order justifies an increase in the Contract Price or an extension of the Contract Time and the parties are unable to agree as to the amount or extent thereof, CONTRACTOR may make a claim therefore as provided in Article 11 or 12.

Rejecting Defective Work:

9.6 ENGINEER will have authority to disapprove or reject Work which ENGINEER believes to be *defective*, and will also have authority to require special inspection or testing of the Work as provided in paragraph 13.9, whether or not the Work is fabricated, installed or completed.

Shop Drawings, Change Orders and Payments:

9.7 In connection with ENGINEER's responsibility for Shop Drawings and samples, see paragraphs 6.23 through 6.29 inclusive.

9.8 In connection with ENGINEER's responsibilities as to Change Orders, see Articles 10, 11, and 12.

9.9 In connection with ENGINEER's responsibilities in respect of Applications for Payment, etc., see Article 14.

Determinations for Unit Prices:

9.10 ENGINEER will determine the actual quantities and classifications of Unit Price Work performed by CONTRACTOR. ENGINEER will review with CONTRACTOR ENGINEER's preliminary determinations on such matters before rendering a written decision thereon (by recommendation of an Application for Payment or otherwise). ENGINEER's written decisions thereon will be final and binding upon OWNER and CONTRACTOR, unless, within ten days after the date of any such decision, either OWNER or CONTRACTOR delivers to the other party to the Agreement and to ENGINEER written notice of intention to appeal from such a decision.

Decisions on Disputes:

9.11 ENGINEER will be the initial interpreter of the requirements of the Contract Documents and judge of the acceptability of the Work thereunder. Claims, disputes and other matters relating to the acceptability of the Work or the interpretation of the requirements of the Contract Documents pertaining to the performance and furnishing of the Work and claims under Articles 11 and 12 in respect of changes in the Contract Price or Contract Time will be referred initially to ENGINEER in writing with a request for a formal decision in accordance with this paragraph, which ENGINEER will render in writing within a reasonable time. Written notice of each such claim, dispute and other matter will be delivered by the claimant to ENGINEER and the other party to the Agreement promptly (but in no event later than thirty days) after the occurrence of the event giving rise thereto, and written supporting data will be submitted to ENGINEER and the other party within sixty days after such occurrence unless ENGINEER allows an additional period of time to ascertain more accurate data in support of the claim.

9.12 When functioning as interpreter and judge under paragraphs 9.10 and 9.11, ENGINEER will not show partiality to OWNER or CONTRACTOR and will not be liable in connection with any interpretation or decision rendered in good faith in such capacity. The rendering of a decision by ENGINEER pursuant to paragraphs 9.10 and 9.11 with respect to any such claim, dispute or other matter (except any which have been waived by the making or acceptance of final payment as provided in paragraph 14.16) will be a condition precedent to any exercise by OWNER or CONTRACTOR of such rights or remedies as either may otherwise have under the Contract Documents or by Laws or Regulations in respect of any such claim, dispute or other matter.

Limitations on ENGINEER's Responsibilities:

9.13 Neither ENGINEER's authority to act under this Article 9 or elsewhere in the Contract Documents nor any decision made by ENGINEER in good faith either to exercise or not exercise such authority shall give rise to any duty or responsibility of ENGINEER to CONTRACTOR, any Subcontractor, any Supplier, or any other person or organization performing any of the Work, or to any surety for any of them.

9.14 Whenever in the Contract Documents the terms "as ordered", "as directed", "as required", "as allowed", "as approved" or terms of like effect or import are used, or the adjectives "reasonable", "suitable", "acceptable", "proper" or "satisfactory" or adjectives of like effect or import are used to describe a requirement, direction, review or judgment of ENGINEER as to the Work, it is intended that such requirement, direction, review or judgment will be solely to evaluate the Work for compliance with the Contract Documents (unless there is a specific statement indicating otherwise). The use of any such term or adjective shall not be effective to assign to ENGINEER any duty or authority to supervise or direct the furnishing or performance of the Work or any duty or authority to undertake responsibility contrary to the provisions of paragraph 9.15 or 9.16.

9.15 ENGINEER will not be responsible for CONTRACTOR's means, methods, techniques, sequences or procedures of construction, or the safety precautions and programs incident thereto, and ENGINEER will not be responsible for CONTRACTOR's failure to perform or furnish the Work in accordance with the Contract Documents.

9.16 ENGINEER will not be responsible for the acts or omissions of CONTRACTOR or of any Subcontractor, any Supplier, or of any other person or organization performing or furnishing any of the Work.

ARTICLE 10 - CHANGES IN THE WORK

_____

10.1 Without invalidating the Agreement and without notice to any surety, OWNER may, at any time or from time to time, order additions, deletions or revisions in the Work; these will be authorized by a Written Amendment, a Change Order, or a Work Directive Change. Upon receipt of any such document, CONTRACTOR shall promptly proceed with the Work involved which will be performed under the applicable conditions of

the Contract Documents (except as otherwise specifically provided).

10.2 If OWNER and CONTRACTOR are unable to agree as to the extent, if any, of an increase or decrease in the Contract Price or an extension or shortening of the Contract Time that should be allowed as a result of a Work Directive Change, a claim may be made therefore as provided in Article 11 or Article 12.

10.3 CONTRACTOR shall not be entitled to an increase in the Contract Price or an extension of the Contract Time with respect to any Work performed that is not required by the Contract Documents as amended, modified and supplemented as provided in paragraphs 3.4 and 3.5, except in the case of an emergency as provided in paragraph 6.22 and except in the case of uncovering Work as provided in paragraph 13.9.

10.4 OWNER and CONTRACTOR shall execute appropriate Change Orders (or Written Amendments)

10.4.1 changes in the Work which are ordered by OWNER pursuant to paragraph 10.1, are required because of acceptance of *defective* Work under paragraph 13.13 or correcting *defective* Work under paragraph 13.14, or are agreed to by the parties;

10.4.2 changes in the Contract Price or Contract Time which are agreed to by the parties; and

10.4.3 changes in the Contract Price or Contract Time which embody the substance of any written decision rendered by ENGINEER pursuant to paragraph 9.11;

provided that, in lieu of executing any such Change Order, an appeal may be taken from any such decision in accordance with the provisions of the Contract Documents and applicable Laws and Regulations, but during any such appeal, CONTRACTOR shall carry on the Work and adhere to the progress schedule as provided in paragraph 6.29.

10.5 If notice of any change affecting the general scope of the Work or the provisions of the Contract Documents (including, but not limited to, Contract Price or Contract Time) is required by the provisions of any Bond to be given to a surety, the giving of any such notice will be CONTRACTOR's responsibility, and the amount of each applicable Bond will be adjusted accordingly.

ARTICLE 11 - CHANGE OF CONTRACT PRICE

11.1 The Contract Price constitutes the total compensation (subject to authorized adjustments) payable to CONTRACTOR for performing the Work. All duties, responsibilities and obligations assigned to or undertaken by CONTRACTOR shall be at his expense without change in the Contract Price.

11.2 The Contract Price may only be changed by a Change Order or by a Written Amendment. Any claim for an increase or decrease in the Contract Price shall be based on written notice delivered by the party making the claim to the other party and to ENGINEER promptly (but in no event later than thirty days) after the occurrence of the event giving rise to the claim and stating the general nature of the claim. Notice of the

amount of the claim with supporting data shall be delivered within sixty days after such occurrence (unless ENGINEER allows an additional period of time to ascertain more accurate data in support of the claim) and shall be accompanied by claimant's written statement that the amount claimed covers all known amounts (direct, indirect and consequential) to which the claimant is entitled as a result of the occurrence of said event. All claims for adjustment in the Contract Price shall be determined by ENGINEER in accordance with paragraph 9.11 if OWNER and CONTRACTOR cannot otherwise agree on the amount involved. No claim for an adjustment in the Contract Price will be valid if not submitted in accordance with this paragraph 11.2.

11.3 The value of any Work covered by a Change Order or of any claim for an increase or decrease in the Contract Price shall be determined in one of the following ways:

11.3.1 Where the Work involved is covered by unit prices contained in the Contract Documents, by application of unit prices to the quantities of the items involved (subject to the provisions of paragraphs 11.9.1. through 11.9.3, inclusive).

11.3.2 By mutual acceptance of a lump sum (which may include an allowance for overhead and profit not necessarily in accordance with paragraph 11.6.2.1.).

11.3.3 On the basis of the Cost of the Work (determined as provided in paragraphs 11.4 and 11.5) plus a CONTRACTOR's Fee for overhead and profit (determined as provided in paragraphs 11.6 and 11.7).

Cost of the Work:

11.4 The term Cost of the Work means the sum of all costs necessarily incurred and paid by CONTRACTOR in the proper performance of the Work. Except as otherwise may be agreed to in writing by OWNER, such costs shall be in amounts no higher than those prevailing in the locality of the Project, shall include only the following items and shall not include any of the costs itemized in paragraph 11.5:

11.4.1 Payroll costs for employees in the direct employ of CONTRACTOR in the performance of the Work under schedules of job classifications agreed upon by OWNER and CONTRACTOR. Payroll costs for employees not employed full time on the Work shall be apportioned on the basis of their time spent on the Work. Payroll costs shall include, but not be limited to, salaries and wages plus the cost of fringe benefits which shall include social security contributions unemployment, excise and payroll taxes, workers' or workmen's compensation, health and retirement benefits, bonuses, sick leave, vacation and holiday pay applicable thereto. Such employees shall include superintendents and foremen at the site. The expenses of performing Work after regular working hours, on Saturday, Sunday or legal holidays, shall be included in the above to the extent authorized by OWNER.

11.4.2 Cost of all materials and equipment furnished and

incorporated in the Work, including costs of transportation and storage thereof, and Suppliers' field services required in connection therewith. All cash discounts shall accrue to CONTRACTOR unless OWNER deposits funds with CONTRACTOR with which to make payments, in which case the cash discounts shall accrue to OWNER. All trade discounts, rebates and refunds and all returns from sale of surplus materials and equipment shall accrue to OWNER, and CONTRACTOR shall make provisions so that they may be obtained.

11.4.3 Payments made by CONTRACTOR to the Subcontractors for Work performed by Subcontractors. If required by OWNER, CONTRACTOR shall obtain competitive bids from Subcontractors acceptable to CONTRACTOR and shall deliver such bids to OWNER who will then determine, with the advice of ENGINEER, which bids will be accepted. If a subcontract provides that the Subcontractor is to be paid on the basis of Cost of the Work Plus a Fee, the Subcontractor's Cost of the Work shall be determined in the same manner as CONTRACTOR's Cost of the Work. All subcontracts shall be subject to the other provisions of the Contract Documents insofar as applicable.

11.4.4 Costs of special consultants (including but not limited to engineers, architects, testing laboratories, surveyors, attorneys and accountants) employed for services specifically related to the Work.

11.4.5 Supplemental costs including the following:

11.4.5.1 The proportion of necessary transportation, travel and subsistence expenses of CONTRACTOR's employees incurred in discharge of duties connected with the Work.

11.4.5.2 Cost, including transportation and maintenance, of all materials, supplies, equipment, machinery, appliances, office and temporary facilities at the site and hand tools not owned by the workers, which are consumed in the performance of the Work, and cost less market value of such items used by not consumed which remain the property of CONTRACTOR.

11.4.5.3 Rentals of all construction equipment and machinery and the parts thereof whether rented from CONTRACTOR or others in accordance with rental agreements approved by OWNER with the advice of ENGINEER, and the costs of transportation, loading, unloading, installation, dismantling and removal thereof - all in accordance with terms of said rental agreements. The rental of any such equipment, machinery or parts shall cease when the use thereof is not longer necessary for the Work.

11.4.5.4 Sales, consumer, use or similar taxes related to the Work, and for which CONTRACTOR is liable, imposed by Laws and Regulations.

11.4.5.5 Deposits lost for causes other than negligence of CONTRACTOR, any Subcontractor or anyone directly or indirectly employed by any of them or for whose acts any of them may be liable, and royalty payments and fees for permits and licenses.

11.4.5.6 Losses and damages (and related expenses), not compensated by insurance or otherwise, to the Work or otherwise sustained by CONTRACTOR in connection with the performance and furnishing of the Work (except losses and damages within the deductible amounts of property insurance established by OWNER in accordance with paragraph 5.9), provided they have resulted from causes other than the negligence of CONTRACTOR, any Subcontractor, or anyone directly or indirectly employed by any of them or for whose acts any of them may be liable. Such losses shall include settlements made with the written consent and approval of OWNER. No such losses, damages and expenses will be included in the Cost of Work for the purpose of determining CONTRACTOR's Fee. If, however, any such loss or damage requires reconstruction and CONTRACTOR is placed in charge thereof, CONTRACTOR shall be paid for services a fee proportionate to that stated in paragraph 11.6.2.

11.4.5.7 The cost of utilities, fuel and sanitary facilities at the site.

11.4.5.8 Minor expenses such as telegrams, long distance telephone calls, telephone service at the site, expressage and similar petty cash items in connection with the Work.

11.4.5.9 Cost of premiums for additional Bonds and insurance required because of changes in the Work and premiums for property insurance coverage within the limits of the deductible amounts established by OWNER in accordance with paragraph 5.9.

11.5 The term Cost of the Work shall not include any of the following:

11.5.1 Payroll costs and other compensation of CONTRACTOR's officers, executives, principals (of partnership and sole proprietorships), general managers, engineers, architects, estimators, attorneys, auditors, accountants, purchasing and contracting agents, expeditors, timekeepers, clerks and other personnel employed by CONTRACTOR whether at the site or in CONTRACTOR's principal or a branch office for general administration of the Work and not specifically included in the agreed upon schedule of job classifications referred to in paragraph 11.4.1 or specifically covered by paragraph 11.4.4 - all of which are to be considered administrative costs covered by the CONTRACTOR's Fee.

11.5.2 Expenses of CONTRACTOR's principal and branch offices other than CONTRACTOR's office at the site.

11.5.3 Any part of CONTRACTOR's

capital expenses, including interest on CONTRACTOR's capital employed for the Work and charges against CONTRACTOR for delinquent payments.

11.5.4 Cost of premiums for all Bonds and for all insurance whether or not CONTRACTOR is required by the Contract Documents to purchase and maintain the same (except for the cost of premiums covered by subparagraph 11.4.5.9 above).

11.5.5 Cost due to the negligence of CONTRACTOR, any Subcontractor, or anyone directly or indirectly employed by any of them or for whose acts any of them may be liable, including but not limited to, the correction of *defective* Work, disposal of materials or equipment wrongly supplied and making good any damage to property.

11.5.6 Other overhead or general expenses costs of any kind and the costs of any item not specifically and expressly included in paragraph 11.4.

CONTRACTOR's Fee:

11.6 The CONTRACTOR's Fee allowed to CONTRACTOR for overhead and profit shall be determined as follows:

11.6.1 a mutually acceptable fixed fee; or if none can be agreed upon,

11.6.2 a fee based on the following percentages of the various portions of the Cost of the Work:

11.6.2.1 for costs incurred under paragraphs 11.4.1 and 11.4.2, the CONTRACTOR's Fee shall be fifteen percent;

11.6.2.2 for costs incurred under paragraph 11.4.3, the CONTRACTOR's Fee shall be five percent; and if a subcontract is on the basis of Cost of the Work Plus a Fee, the maximum allowable to CONTRACTOR on account of overhead and profit of all Subcontractors shall be fifteen percent;

11.6.2.3 no fee shall be payable on the basis of costs itemized under paragraphs 11.4.4, 11.4.5 and 11.5;

11.6.2.4 the amount of credit to be allowed by CONTRACTOR to OWNER for any such change which results in a net decrease in cost will be the amount of the actual net decreases plus a deduction in CONTRACTOR's Fee by an amount equal to ten percent of the net decrease; and

11.6.2.5 when both additions and credits are involved in any one change, the adjustment in CONTRACTOR's Fee shall be computed on the basis of the net change in accordance with paragraphs 11.6.2.1 through 11.6.2.4, inclusive.

11.7 Whenever the cost of any Work is to be determined pursuant to paragraph 11.4 or 11.5, CONTRACTOR will submit in form acceptable to ENGINEER an itemized cost breakdown together with supporting data.

Cash Allowances:

11.8 It is understood that CONTRACTOR has included in the Contract Price all allowances so named in the Contract Documents and shall cause the Work so covered to be done by such Subcontractors or Suppliers and for such sums within the limit of the allowances as may be acceptable to ENGINEER. CONTRACTOR agrees that:

11.8.1. The allowances include the cost to CONTRACTOR (less any applicable trade discounts) of materials and equipment required by the allowances to be delivered at the site, and all applicable taxes; and

11.8.2. CONTRACTOR's costs for unloading and handling on the site, labor, installation costs, overhead, profit and other expenses contemplated for the allowances have been included in the Contract Price and not in the allowances. No demand for additional payment on account of any thereof will be valid.

Prior to final payment, an appropriate Change Order will be issued as recommended by ENGINEER to reflect actual amounts due CONTRACTOR on account of Work covered by allowances, and the Contract Price shall be correspondingly adjusted.

Unit Price Work:

11.9.1 Where the Contract Documents provide that all or part of the Work is to be Unit Price Work, initially the Contract Price will be deemed to include for all Unit Price Work an amount equal to the sum of the established unit prices for each separately identified item of Unit Price Work times the estimated quantity of each item as indicated in the Agreement. The estimated quantities of items of Unit Price Work are not guaranteed and are solely for the purpose of comparison of Bids and determining an initial Contract Price. Determinations of the actual quantities and classifications of Unit Price Work performed by CONTRACTOR will be made by ENGINEER in accordance with Paragraph 9.10.

11.9.2 Each unit price will be deemed to include an amount considered by CONTRACTOR to be adequate to cover CONTRACTOR's overhead and profit for each separately identified item.

11.9.3 There the quantity of any item of Unit Price Work performed by CONTRACTOR differs materially and significantly from the estimated quantity of such item indicated in the Agreement and there is no corresponding adjustment with respect to any other item of Work and if CONTRACTOR believes that CONTRACTOR has incurred additional expenses as a result thereof, CONTRACTOR may make a claim for an increase in the CONTRACTOR may make a claim for an increase in the Contract Price in accordance with Article 11 if the parties are unable to agree as to the amount of any such increase.

ARTICLE 12 - CHANGE OF CONTRACT TIME

12.1 The Contract Time may only be changed by a Change Order or a Written

Amendment. Any claim for an extension or shortening of the Contract Time shall be based on written notice delivered by the party making the claim to the other party and to ENGINEER promptly (but in no event later than thirty days) after the occurrence of the event giving rise to the claim and stating the general nature of the claim. Notice of the extent of the claim with supporting data shall be delivered within sixty days after such occurrence (unless ENGINEER allows an additional period of time to ascertain more accurate data in support of the claim) and shall be accompanied by the claimant's written statement that the adjustment claimed is the entire adjustment to which the claimant has reason to believe it is entitled as a result of the occurrence of said event. All claims for adjustment in the Contract Time shall be determined by ENGINEER in accordance with paragraph 9.11 if OWNER and CONTRACTOR cannot other wise agree. No claim for an adjustment in the Contract Time will be valid if not submitted in accordance with the requirements of this paragraph 12.1.

12.2 The Contract Time will be extended in an amount equal to time lost due to delays beyond the control of CONTRACTOR if a claim is made therefore as provided in paragraph 12.1. Such delays shall include, but not be limited to, acts or neglect by OWNER or others performing additional work as contemplated by Article 7, or to fires, floods, labor disputes, epidemics, abnormal weather conditions or acts of God.

12.3 All time limits stated in the Contract Documents are of the essence of the Agreement. The provisions of this Article 12 shall not exclude recovery for damages (including but not limited to fees and charges of engineers, architects, attorneys and other professionals and court and arbitration costs) for delay by either party.

ARTICLE 13 - WARRANTY AND GUARANTEE; TESTS AND INSPECTIONS: CORRECTION, REMOVAL OR ACCEPTANCE OF DEFECTIVE WORK

_____
____

Warranty and Guarantee:

13.1 CONTRACTOR warrants and guarantees to OWNER and ENGINEER that all Work will be in accordance with the Contract Documents and will not be *defective*. Prompt notice of all defects shall be given to CONTRACTOR. All *defective* Work, whether or not in place, may be rejected, corrected or accepted as provided in this Article 13.

Access to Work:

13.2 ENGINEER and ENGINEER's representatives, other representative of OWNER, testing agencies and governmental agencies with jurisdictional interests will have access to the Work at reasonable times for their observation, inspecting and testing. CONTRACTOR shall provide proper and safe conditions for such access.

Tests and Inspection:

13.3 CONTRACTOR shall give ENGINEER timely notice of readiness of the Work for all required inspection, tests or approvals.

13.4 If Laws or Regulations of any public body having jurisdiction require any Work (or

part thereof) to specifically be inspected, tested or approved, CONTRACTOR shall assume full responsibility therefore, pay all costs in connection therewith and furnish ENGINEER the required certificates of inspection, testing or approval. CONTRACTOR shall also be responsible for and shall pay all costs in connection with any inspection or testing required in connection with OWNER's or ENGINEER's acceptance of a Supplier of materials or equipment proposed to be incorporated in the Work, or of materials or equipment submitted for approval prior to CONTRACTOR's purchase thereof for incorporation in the Work. The cost of all inspections, tests and approvals in addition to the above which are required by the Contract Documents shall be paid by OWNER (unless otherwise specified).

13.5 All inspections, tests or approvals other than those required by Laws or Regulations of any public body having jurisdiction shall be performed by organizations acceptable to OWNER and CONTRACTOR (or by ENGINEER if so specified).

13.6 If any Work (including the work of others) that is to be inspected, tested or approved is covered without written concurrence of ENGINEER, it must, if requested by ENGINEER, be uncovered for observation. Such uncovering shall be at CONTRACTOR's expense unless CONTRACTOR has given ENGINEER timely notice of CONTRACTOR's intention to cover the same and ENGINEER has not acted with reasonable promptness in response to such notice.

13.7 Neither observations by ENGINEER nor inspections, tests or approvals by others shall relieve CONTRACTOR with CONTRACTOR's obligations to perform the Work in accordance with the Contract Documents.

Uncovering Work:

13.8 If any Work is covered contrary to the written request of ENGINEER, it must, if requested by ENGINEER, be uncovered for ENGINEER's observations and replaced at CONTRACTOR's expense.

13.9 If ENGINEER considers it necessary or advisable that covered Work be observed by ENGINEER or inspected or tested by others, CONTRACTOR, at ENGINEER's request, shall uncover, expose or otherwise make available for observation, inspection or testing as ENGINEER may require, that portion of the Work in question, furnishing all necessary labor, material and equipment. If it is found that such Work is *defective*, CONTRACTOR shall bear all direct, indirect and consequential costs of such uncovering, exposure, observation, inspection and testing and of satisfactory reconstruction, (including but not limited to fees and charges of engineers, architects, attorneys and other professionals), and OWNER shall be entitled to an appropriate decrease in the CONTRACT Price, and, if the parties are unable to agree as to the amount thereof, may make a claim therefore as provided in Article 11. If, however, such Work is not found to be *defective*, CONTRACTOR shall be allowed an increase in the Contract Price or an extension of the Contract Time, or both, directly attributable to such uncovering, exposure, observation, inspection, testing and reconstruction; and, if the parties are unable to agree as to the amount or extent thereof, CONTRACTOR may make a claim therefore as provided in Articles 11 and 12.

Owner May Stop the Work:

13.10 If the Work is *defective*, or CONTRACTOR fails to supply sufficient skilled workers or suitable materials or equipment, or fails to furnish or perform the Work in such a way that the completed Work will conform to the Contract Documents, OWNER may order CONTRACTOR to stop the Work, or any portion thereof, until the cause for such order has been eliminated; however, this right of OWNER to stop the Work shall not give rise to any duty on the part of OWNER to exercise this right for the benefit of CONTRACTOR or any other party.

Correction or Removal of Defective Work:

13.11 If required by ENGINEER, CONTRACTOR shall promptly, as directed, either correct all *defective* Work, whether or not fabricated, installed or completed, or, if the Work has been rejected by ENGINEER, remove it from the site and replace it with *nondefective* Work. CONTRACTOR shall bear all direct, indirect and consequential costs of such correction or removal (including but not limited to fees and charges of engineers, architects, attorneys and other professionals) made necessary thereby.

One Year Correction Period:

13.12 If within one year after the date of Substantial Completion or such longer period of time as may be prescribed by Laws or Regulations or by the terms of any applicable special guarantee required by the Contract Documents or by any specific provision of the Contract Documents, any Work is found to be *defective*, CONTRACTOR shall promptly, without cost to OWNER and in accordance with OWNER's written instruction, either correct such *defective* Work, or, if it has been rejected by OWNER, remove it from the site and replace it with *nondefective* Work. If CONTRACTOR does not promptly comply with the terms of such instructions, or in an emergency where delay would cause serious risk of loss or damage, OWNER may have the *defective* Work corrected or the rejected Work removed and replaced, and all direct, indirect and consequential costs of such removal and replacement (including but not limited to fees and charges or engineers, architects, attorneys and other professionals) will be paid by CONTRACTOR. In special circumstances where a particular item of equipment is placed in continuous service before Substantial Completion of all the Work, the correction period for that item may start to run from an earlier date if so provided in the Specifications or by Written Amendment.

Acceptance of Defective Work:

13.13 If, instead of requiring correction or removal and replacement of *defective* Work, OWNER (and, prior to ENGINEER's recommendation of final payment, also ENGINEER) prefers to accept it, OWNER may do so. CONTRACTOR shall bear all direct, indirect and consequential costs attributable to OWNER's evaluation of and determination to accept such *defective* Work (such costs to be approved by ENGINEER as to reasonableness and to include but not be limited to fees and charges of engineers, architects, attorneys and other professionals). If any such acceptance occurs prior to ENGINEER's recommendation of final payment, a Change Order will be issued

incorporating the necessary revisions in the Contract Documents with respect to the Work; and OWNER shall be entitled to an appropriate decrease in the Contract Price, and, if the parties are unable to agree as to the amount thereof, OWNER may make a claim therefore as provided in Article 11. If the acceptance occurs after such recommendation, an appropriate amount will be paid by CONTRACTOR to OWNER.

OWNER May Correct Defective Work:

13.14 If CONTRACTOR fails within a reasonable time after written notice of ENGINEER to proceed to correct and to correct *defective* Work or to remove and replace rejected Work as required by ENGINEER in accordance with paragraph 13.11, or if CONTRACTOR fails to perform the Work in accordance with the Contract Documents, or if CONTRACTOR fails to comply with any other provision of the Contract Documents, OWNER may, after seven days' written notice to CONTRACTOR, correct and remedy any such deficiency. In exercising the rights and remedies under this paragraph OWNER shall proceed expeditiously. To the extent necessary to complete corrective and remedial action, OWNER may exclude CONTRACTOR from all or part of the site, take possession of all or part of the Work, and suspend CONTRACTOR's services related thereto, take possession of CONTRACTOR's tools, appliances, construction equipment and machinery at the site and incorporate in the Work all materials and equipment stored at the site or for which OWNER has paid CONTRACTOR but which are stored elsewhere. CONTRACTOR shall allow OWNER, OWNER's representatives, agents and employees such access to the site as many be necessary to enable OWNER to exercise the rights and remedies under this paragraph. All direct, indirect and consequential costs of OWNER in exercising such rights and remedies will be charged against CONTRACTOR in an amount approved as to reasonableness by ENGINEER, and a Change Order will be issued incorporating the necessary revisions in the Contract Documents with respect to the Work; and OWNER shall be entitled to an appropriate decrease in the Contract Price, and, if the parties are unable to agree as to the amount thereof, OWNER may make a claim therefore as provided in Article 11. Such direct, indirect and consequential costs will include but not be limited to fees and charges of engineers, architects, attorneys and other professionals, all court and arbitration costs and all costs of repair and replacement of work of others destroyed or damaged by correction, removal or replacement of CONTRACTOR's *defective* Work. CONTRACTOR shall not be allowed an extension of the Contract Time because of any delay in performance of the Work attributable to the exercise by OWNER of OWNER's rights and remedies hereunder.

ARTICLE 14 - PAYMENTS TO CONTRACTOR AND COMPLETION

Schedule of Values:

14.1 The schedule of values established as provided in paragraph 2.8 will serve as the basis for progress payments and will be incorporated into a form of Application for Payment acceptable to ENGINEER. Progress payments on account of Unit Price Work will be based on the number of units completed.

Application for Progress Payment:

14.2 At least twenty days before each progress payment is scheduled (but not more often than once a month), CONTRACTOR shall submit to ENGINEER for review an Application for Payment filled out and signed by CONTRACTOR covering the Work completed as of the date of the Application and accompanied by such supporting documentation as is required by the Contract Documents. If payment is requested on the basis of materials and equipment not incorporated in the Work but delivered and suitably stored at the site or at another location agreed to in writing, the Application for Payment shall also be accompanied by a bill of sale, invoice or other documentation warranting that OWNER has received the materials and equipment free and clear of all liens, charges, security interests and encumbrances (which are hereinafter in these General Conditions referred to as "Liens") and evidence that the materials and equipment are covered by appropriate property insurance and other arrangements to protect OWNER's interest therein, all of which will be satisfactory to OWNER. The amount of retainage with respect to progress payments will be as stipulated in the Supplementary Conditions.

CONTRACTOR's Warranty of Title:

14.3 CONTRACTOR warrants and guarantees that title to all Work, materials and equipment covered by any Application for Payment, whether incorporated in the Project or not, will pass to OWNER no later than the time of payment free and clear of all Liens.

Review of Applications for Progress Payment:

14.4 ENGINEER will, within ten days after receipt of each Application for Payment, either indicate in writing a recommendation of payment and present the Application to OWNER, or return the Application to CONTRACTOR indicating in writing ENGINEER's reasons for refusing to recommend payment. In the latter case, CONTRACTOR may make the necessary corrections and resubmit the Application. Thirty days after presentation of the Application for Payment with ENGINEER's recommendation, the amount recommended will (subject to the provisions of the last sentence of paragraph 14.7) become due and when due will be paid by OWNER to CONTRACTOR.

14.5 ENGINEER's recommendation of any payment requested in an Application for Payment will constitute a representation by ENGINEER to OWNER, based on ENGINEER's on-site observations of the Work in progress as an experienced and qualified design professional and on ENGINEER's review of the Application for Payment and the accompanying data and schedules that the Work has progressed to the point indicated; that, to the best of ENGINEER's knowledge, information and belief, the quality of the Work is in accordance with the Contract Documents (subject to an evaluation of the Work as a functioning whole prior to or upon Substantial Completion, to the results of any subsequent tests called for in the Contract Documents, to a final determination of quantities and classifications for Unit Price Work under paragraph 9.10, and to any other qualifications stated in the recommendation); and that CONTRACTOR is entitled to

payment of the amount recommended. However, by recommending any such payment ENGINEER will not thereby be deemed to have represented that exhaustive or continuous on-site inspections have been made to check the quality or the quantity of the Work beyond the responsibilities specifically assigned to ENGINEER in the Contract Documents or that there may not be other matters or issues between the parties that might entitle CONTRACTOR to be paid additionally by OWNER or OWNER to withhold payment to CONTRACTOR.

14.6 ENGINEER's recommendation of final payment will constitute an additional representation by ENGINEER to OWNER that the conditions precedent to CONTRACTOR's being entitled to final payment as set forth in paragraph 14.13 have been fulfilled.

14.7 ENGINEER may refuse to recommend the whole or any part of any payment if, in ENGINEER's opinion, it would be incorrect to make such representations to OWNER. ENGINEER may also refuse to recommend any such payment, or, because of subsequently discovered evidence or the results of subsequent inspections or tests, nullify any such payment previously recommended, to such extents as may be necessary in ENGINEER's opinion to protect OWNER from loss because:

14.7.1 the Work is *defective*, or completed Work has been damaged requiring correction or replacement.

14.7.2 the Contract Price has been reduced by Written Amendment or Change Order,

14.7.3 OWNER has been required to correct *defective* Work or complete Work in accordance with paragraph 13.14, or

14.7.4 of ENGINEER's actual knowledge of the occurrence of any of the events enumerated in paragraphs 15.2.1 through 15.2.9 inclusive.

OWNER may refuse to make payment of the full amount recommended by ENGINEER because claims have been made against OWNER on account of CONTRACTOR's performance or furnishing of the Work or Liens have been filed in connection with the Work or there are other items entitling OWNER to a set-off against the amount recommended, but OWNER must give CONTRACTOR immediate written notice (with a copy to ENGINEER) stating the reasons for such action.

Substantial Completion:

14.8 When CONTRACTOR considers the entire Work ready for its intended use CONTRACTOR shall notify OWNER and ENGINEER in writing that the entire Work is substantially complete (except for items specifically listed by CONTRACTOR as incomplete) and request that ENGINEER issue a certificate of Substantial Completion. Within a reasonable time thereafter, OWNER, CONTRACTOR and ENGINEER shall make an inspection of the Work to determine the status of completion. If ENGINEER does not consider the Work substantially complete, ENGINEER will notify CONTRACTOR in writing giving the reasons therefore. If ENGINEER considers the Work substantially complete ENGINEER will prepare and deliver to OWNER a tentative certificate of Substantial Completion which shall fix the date of Substantial Completion. There shall be attached to the

certificate a tentative list of items to be completed or corrected before final payment. OWNER shall have seven days after receipt of the tentative certificate during which to make written objection to ENGINEER as to any provisions of the certificate or attached list. If, after considering such objections, ENGINEER concludes that the Work is not substantially complete, ENGINEER will within fourteen days after submission of the tentative certificate to OWNER notify CONTRACTOR in writing, stating the reasons therefore. If, after consideration of OWNER's objections, ENGINEER considers the Work substantially complete, ENGINEER will within said fourteen days execute and deliver to OWNER and CONTRACTOR a definitive certificate of Substantial Completion (with a revised tentative list of items to be completed or corrected) reflecting such changes from the tentative certificate as ENGINEER believes justified after consideration of any objections from OWNER. At the time of delivery of the tentative certificate of Substantial Completion ENGINEER will deliver to OWNER and CONTRACTOR a written recommendation as to division of responsibilities pending final payment between OWNER and CONTRACTOR with respect to security, operation, safety, maintenance, heat, utilities, insurance and warranties. Unless OWNER and CONTRACTOR agree otherwise in writing and so inform ENGINEER prior to ENGINEER's issuing the definitive certificate of Substantial Completion, ENGINEER's aforesaid recommendation will be binding on OWNER and CONTRACTOR until final payment.

14.9 OWNER shall have the right to exclude CONTRACTOR from the Work after the date of Substantial Completion, but OWNER shall allow CONTRACTOR reasonable access to complete or correct items on the tentative list.

Partial Utilization:

14.10 Use by OWNER of any finished part of the Work, which has specifically been identified in the Contract Documents, or which OWNER, ENGINEER and CONTRACTOR agree constitutes a separately functioning and useable part of the Work that can be used by OWNER without significant interference with CONTRACTOR's performance of the remainder of the Work, may be accomplished prior to Substantial Completion of all the Work subject to the following:

14.10.1 OWNER at any time may request CONTRACTOR in writing to permit OWNER to use any such part of the Work which OWNER believes to be ready for its intended use and substantial complete. If CONTRACTOR agrees, CONTRACTOR will certify to OWNER and ENGINEER that said part of the Work is substantially complete and request ENGINEER to issue a certificate of Substantial Completion for that part of the Work. CONTRACTOR at any time may notify OWNER and ENGINEER in writing that CONTRACTOR considers any such part of the Work ready for its intended use and substantially complete and request ENGINEER to issue a certificate of Substantial Completion for that part of the Work. Within a reasonable time after either such request, OWNER, CONTRACTOR and ENGINEER shall make an inspection of that part of the Work to determine its status of completion. If ENGINEER does not consider that part of the

Work to be substantially complete, ENGINEER will notify OWNER and CONTRACTOR in writing giving the reasons therefore. If ENGINEER considers that part of the Work to be substantially complete, the provisions of paragraphs 14.8 and 14.9 will apply with respect to certification of Substantial Completion of that part of the Work and the division or responsibility in respect thereof and access thereto.

14.10.2 OWNER may at any time request CONTRACTOR in writing to permit OWNER to take over operation of any such part of the Work although it is not substantially complete. A copy of such request will be sent to ENGINEER and within a reasonable time thereafter OWNER, CONTRACTOR and ENGINEER shall make an inspection of that part of the Work to determine its status of completion and will prepare a list of the items remaining to be completed or corrected thereon before final payment. If CONTRACTOR does not object in writing to OWNER and ENGINEER that such part of the Work is not ready for separate operation by OWNER, ENGINEER will finalize the list of items to be completed or corrected and will deliver such list to OWNER and CONTRACTOR together with a written recommendation as to the division of responsibilities pending final payment between OWNER and CONTRACTOR with respect to security, operation, safety, maintenance, utilities, insurance warranties and guarantees for that part of the Work which will become binding upon OWNER and CONTRACTOR at the time when OWNER takes over such operation (unless they shall have otherwise agreed in writing and so informed ENGINEER). During such operation and prior to Substantial Completion of such part of the Work, OWNER shall allow CONTRACTOR reasonable access to complete or correct items on said list and to complete other related Work.

14.10.3 No occupancy or separate operation of part of the Work will be accomplished prior to compliance with the requirements of paragraph 5.15 in respect of property insurance.

Final Inspection:

14.11 Upon written notice from CONTRACTOR that the entire Work or an agreed portion thereof is complete, ENGINEER will make a final inspection with OWNER and CONTRACTOR and will notify CONTRACTOR in writing of all particulars in which this inspection reveals that the Work is incomplete or *defective*. CONTRACTOR shall immediately take such measures as are necessary to remedy such deficiencies.

Final Application for Payment:

14.12 After CONTRACTOR has completed all such corrections to the satisfaction of ENGINEER and delivered all maintenance and operating instruction, schedules, guarantees, Bonds, certificates of inspection, marked-up record documents (as provided in paragraph 6.19) and other documents - all as required by the Contract Documents, and after ENGINEER

has indicated that the Work is acceptable (subject to the provisions of paragraph 14.16), CONTRACTOR may make application for final payment following the procedure for progress payments. The final Application for Payment shall be accompanied by all documentation called for in the Contract Documents, together which complete and legally effective releases of waivers (satisfactory to OWNER) of all Liens arising out of or filed in connection with the Work. In lieu thereof and as approved by OWNER, CONTRACTOR may furnish receipts or leases in full; an affidavit of CONTRACTOR that the releases and receipts include all labor, services, material and equipment for which a Lien could be filed, and that all payrolls, material and equipment bills, and other indebtedness connected with the Work for which OWNER or OWNER's property might in any way be responsible, have been paid or otherwise satisfied; and consent of the surety, if any, to final payment. If any Subcontractor of Supplier fails to furnish a release or receipt in full, CONTRACTOR may furnish a Bond or other collateral satisfactory to OWNER to indemnify OWNER against any Lien.

Final Payment and Acceptance:

14.13 If, on the basis of ENGINEER's observation of the Work during construction and final inspection, and ENGINEER's review of the final Application for Payment and accompanying documentation - all as required by the Contract Documents, ENGINEER is satisfied that the Work has been completed and CONTRACTOR's other obligations under the Contract Documents have been fulfilled, ENGINEER will, within ten days after receipt of the final Application for Payment, indicate in writing ENGINEER's recommendation of payment and present the Application to OWNER for payment. Thereupon ENGINEER will give written notice to OWNER and CONTRACTOR that the Work is acceptable subject to the provisions of paragraph 14.16. Otherwise, ENGINEER will return the Application to CONTRACTOR, indicating in writing the reasons for refusing to recommend final payment, in which case CONTRACTOR shall make the necessary corrections and resubmit the Application. Thirty days after presentation to OWNER of the Application and accompanying documentation, in appropriate form and substance, and with ENGINEER's recommendation and notice of acceptability, the amount recommended by ENGINEER will become due and will be paid by OWNER to CONTRACTOR.

14.14 If, through no fault of CONTRACTOR, final completion of the Work is significantly delayed and if ENGINEER so confirms, OWNER shall, upon receipt of CONTRACTOR's final Application for Payment and recommendation of ENGINEER, and without terminating the Agreement, make payment of the balance due for that portion of the Work fully completed and accepted. If the remaining balance to be held by OWNER for Work not fully completed or corrected is less than the retainage stipulated in the Agreement, and if Bonds have been furnished as required in paragraph 5.1, the written consent of the surety to the payment of the balance due for that portion of the Work fully completed and accepted shall be submitted by CONTRACTOR to ENGINEER with the Application for such payment. Such payment shall be made under the terms and conditions governing final payment, except that it shall not constitute a waiver of claims.

Contractor's Continuing Obligation:

14.15 CONTRACTOR's obligation to perform and complete the Work in accordance with the Contract Documents shall be absolute. Neither recommendation of any progress or final payment by ENGINEER, nor the issuance of a certificate of Substantial Completion, nor any payment by OWNER to CONTRACTOR under the Contract Documents, nor any use or occupancy of the Work or any part thereof by OWNER, nor any act of acceptance by OWNER nor any failure to do so, nor any review and approval of a Shop Drawing or sample submission, nor the issuance of a notice of acceptability by ENGINEER pursuant to paragraph 14.13, nor any correction of *defective* Work by OWNER will constitute an acceptance of Work not in accordance with the Contract Documents or a release of CONTRACTOR's obligation to perform the Work in accordance with the Contract Documents (except as provided in paragraph 14.16).

Waiver of Claims:

14.16 The making and acceptance of final payment will constitute:

14.16.1 a waiver of all claims by OWNER against CONTRACTOR, except claims arising from unsettled Liens, from *defective* Work appearing after final inspection pursuant to paragraph 14.11 or from failure to comply with the Contract Documents or the terms of any special guarantees specified therein; however, it will not constitute a waiver by OWNER of any rights in respect of CONTRACTOR's continuing obligations under the Contract Documents; and

14.16.2 a waiver of all claims by CONTRACTOR against OWNER other than those previously made in writing and still unsettled.

ARTICLE 15 - SUSPENSION OF WORK AND TERMINATION

_____

Owner May Suspend Work:

15.1 OWNER may, at any time and without cause, suspend the Work or any portion thereof for a period of not more than ninety days by notice in writing to CONTRACTOR and ENGINEER which will fix the date on which Work will be resumed. CONTRACTOR shall resume the Work ion the date so fixed. CONTRACTOR shall be allowed an increase in the Contract Price or an extension of the Contract Time, or both, directly attributable to any suspension if CONTRACTOR makes an approved claim therefore as provided in Articles 11 and 12.

Owner May Terminate:

15.2 Upon the occurrence of any one or more of the following events:

15.2.1 if CONTRACTOR commences a voluntary case under any chapter of the Bankruptcy Code (Title 11, United States Code), as now or hereafter in effect, or if CONTRACTOR takes any equivalent or similar action by filing a petition or otherwise under any other federal or state law in effect at such time relating to the bankruptcy or insolvency;

15.2.2 if a petition if filed against CONTRACTOR under any chapter of the Bankruptcy Code as now or hereafter in effect at the time of filing, or if a petition is filed seeking any such equivalent or similar relief against CONTRACTOR under any other federal or state law in effect at the time relating to bankruptcy or insolvency;

15.2.3 if CONTRACTOR makes a general assignment for the benefit or creditors;

15.2.4 if a trustee, receiver, custodian or agent of CONTRACTOR is appointed under applicable law or under contract, whose appointment or authority to take charge or property of CONTRACTOR is for the purpose of enforcing a Lien against such property or for the purpose of general administration of such property for the benefit of CONTRACTOR's creditors:

15.2.5 if CONTRACTOR admits in writing an inability to pay its debts generally as they become due;

15.2.6 if CONTRACTOR persistently fails to perform the Work in accordance with the Contract Documents (including, but not limited to, failure to supply sufficient skilled workers or suitable materials or equipment or failure to adhere to the progress schedule established under paragraph 2.9 as revised from time to time);

15.2.7 if CONTRACTOR disregards Laws or Regulations of any public body having jurisdiction;

15.2.8 if CONTRACTOR disregards the authority of ENGINEER; or

15.2.9 if CONTRACTOR otherwise violates in any substantial way any provisions of the Contract Documents;

OWNER may, after giving CONTRACTOR (and the surety, if there be one) seven days' written notice and to the extent permitted by Laws and Regulations, terminate the services of CONTRACTOR, exclude CONTRACTOR from the site and take possession of the Work and of all CONTRACTOR's tools, appliances, construction equipment and machinery at the site and use the same to the full extent they could be used by CONTRACTOR (without liability to CONTRACTOR for trespass of conversion), incorporate in the Work all materials and equipment stored at the site or for which OWNER has paid CONTRACTOR but which are stored elsewhere, and finish the Work as OWNER may deem expedient. In such case CONTRACTOR shall not be entitled to receive any further payment until the Work is finished. If the unpaid balance of the Contact Price exceeds the direct, indirect and consequential costs of completing the Work (including but not limited to fees and charges of engineers, architects, attorneys and other professionals and court and arbitration costs) such excess will be paid to CONTRACTOR. If such costs exceed such unpaid balance, CONTRACTOR shall pay the difference to OWNER. Such costs incurred by OWNER will be approved as to reasonableness by ENGINEER and incorporated in a Change Order, but when exercising any rights or remedies under this paragraph OWNER shall

not be required to obtain the lowest price for the Work performed.

15.3 Where CONTRACTOR's services have been so terminated by OWNER, the termination will not affect any rights or remedies of OWNER against CONTRACTOR when existing or which may thereafter accrue. Any retention or payment of moneys due CONTRACTOR by OWNER will not release CONTRACTOR from liability.

15.4 Upon seven days' written notice to CONTRACTOR and ENGINEER, OWNER may, without cause and without prejudice to any other right or remedy, elect to abandon the Work and terminate the Agreement. In such case, CONTRACTOR shall be paid for all Work executed and any expense sustained plus reasonable termination expenses, which will include, but not be limited to, direct, indirect and consequential costs (including, but not limited to, fees and charges of engineers, architects, attorneys and other professionals and court and arbitration costs).

Contractor May Stop Work or Terminate:

15.5 If, through no act or fault of CONTRACTOR, the Work is suspended for a period of more than ninety days by OWNER or under an order of court or other public authority, or ENGINEER fails to act on any Application for Payment within thirty days after it is submitted, or OWNER fails for thirty days to pay CONTRACTOR any sum finally determined to be due, then CONTRACTOR may, upon seven days' written notice to OWNER and ENGINEER, terminate the Agreement and recover from OWNER payment for all Work executed and any expense sustained plus reasonable termination expenses. In addition and in lieu of terminating the Agreement, if ENGINEER has failed to act on an Application for Payment or OWNER has failed to make any payment as aforesaid, CONTRACTOR may upon seven days' written notice to OWNER and ENGINEER stop the Work until payment of all amounts then due. The provisions of this under paragraph 6.29 to carry on the Work in accordance with the progress schedule and without delay during disputes and disagreements with OWNER.

ARTICLE 16 - DISPUTE RESOLUTION

_____

16.1 METHODS AND PROCEDURES

In an effort to resolve any conflicts that arise during the construction of the project or following the completion of the project, the OWNER and the CONTRACTOR agree that all disputes between them arising out of or relating to this Agreement shall be submitted to nonbinding mediation, unless the parties mutually agree otherwise.

The OWNER and the CONTRACTOR further agree to include a similar mediation provision in all agreements with independent contractors and consultants retained for the project and to require all independent contractors and consultants also to include a similar mediation provision in all agreements with subcontractors, subconsultants, suppliers or fabricators so retained, thereby providing for mediation as the primary method for dispute resolution between the parties to those agreements.

ARTICLE 17 - MISCELLANEOUS

_____

Giving Notice:

17.1 Whenever any provision of the Contract Documents requires the giving of written notice, it will be deemed to have been validly given if delivered in person to the individual or to a member of the firm or to an officer of the corporation for whom it is intended, or if delivered at or sent by registered or certified mail, postage prepaid, to the last business address known to the giver of the notice.

Computation of Time:

17.2.1 When any period of time is referred to in the Contract Documents by days, it will be computed to exclude the first and include the last day of such period. If the last day of any such period falls on a Saturday or Sunday or on a day made a legal holiday by the law of the applicable jurisdiction, such day will be omitted from the computation.

17.2.2 A calendar day of twenty-four hours measured from midnight to the next midnight shall constitute a day.

General:

17.3 Should OWNER or CONTRACTOR suffer injury or damage to person or property because of any error, omission or act of the other party or of any of the other party's employees or agents or others for whose acts the other party is legally liable, claim will be made in writing to the other party within a reasonable time of the firs observance of such injury or damage. The provisions of this paragraph 17.3 shall not be construed as a substitute for or a waiver of the provisions of any applicable statute of limitations or repose.

17.4 The duties and obligations imposed by these General Conditions and the rights and remedies available hereunder to the parties hereto, and, in particular but without limitation, the warranties, guarantees and obligations imposed upon CONTRACTOR by paragraphs 6.30, 13.1, 13.12, 13.14, 14.3 and 15.2 and all of the rights and remedies available to OWNER and ENGINEER thereunder, are in addition to, and are not to be construed in any way as a limitation of, any rights and remedies available to any or all of them which are otherwise imposed or available by Laws or Regulations, by special warranty or guarantee or by other provisions of the Contract Documents, and the provisions of this paragraph will be as effective as if repeated specifically in the Contract Documents in connection with each particular duty, obligation, right and remedy to which they apply. All representations, warranties and guarantees made in the Contract Documents will survive final payment and termination or completion of the Agreement.

SECTION 00800
SUPPLEMENTARY CONDITIONS

These Supplementary Conditions amend or supplement the Standard General Conditions of the Construction Contract and other provisions of the Contract Documents as indicated below. All provisions that are not so amended or supplemented remain in full force and effect.

The terms used in these Supplementary Conditions will have the meanings indicated in the General Conditions. Additional terms used in these Supplementary Conditions have the meanings stated below, which are applicable to both the singular and plural thereof.

TABLE OF CONTENTS

		Page
SC-2.3	Commencement of Contract Times; Notice to Proceed	1
SC-2.4	Starting the Project	1
SC-2.5	Before Starting Construction, Adjustment of Discrepancies	2
SC-2.7	Certificates of Insurance	2
SC-4.2.1	Physical Conditions, Explorations and Reports Used by Engineer	2
SC-4.3.3	Physical Conditions, Underground Facilities, Drawings Used by Engineer	2
SC-5.4	Contractor's Liability Insurance	2
SC-6.4	Labor, Materials, & Equipment, Contractor's Necessary Facilities	4
SC-6.7.3	Substitutes and "Or-Equals", Engineer's Evaluation	4
SC-6.7.4-6.7.6	Substitutes and "Or-Equals", Submission and Selection	4
SC-6.8.3	Contractors Responsibilities, Subcontract Amount	5
SC-6.21	Contractor's Responsibilities, Accidents	5
SC-6.33	Contractor's Responsibilities, Indemnification, Subcontractors	5
SC-9.3	Project Representative	5
SC-11.9.2	Unit Price Work	6
SC-12.2	Changes of Contract Time, Delays, Abnormal Weather Conditions	6
SC-12.3.1	Liquidated Damages	7
SC-13.2	Access to the Work	7
SC-17.5	Miscellaneous, High Voltage Act	7
SC-17.6	Miscellaneous, Safety Requirements	7
SC-17.7	Miscellaneous, Contractor's Status	7

SC-2.3. Delete Paragraph 2.3 in its entirety and insert the following in its place:

The Contract Time will commence to run on the day indicated in the Notice to Proceed. A Notice to Proceed may be given at any time within 30 days after the Effective Date of the Agreement.

SC-2.4. Delete Paragraph 2.4 in its entirety and insert the following in its place:

The Contractor shall start to perform the Work within 10 calendar days of the date when the Contract Time commences to run, but no Work shall be done at the site prior to the date on which the Contract Time commences to run.

SC-2.5. Add the following to the end of Paragraph 2.5:

Any known discrepancy that Contractor adjusts without requesting interpretation or clarification from the Engineer shall be made at the risk of the Contractor, and Contractor shall bear all expenses arising from complications from such adjustment.

SC-2.7. Add the following to the end of Paragraph 2.7:

Failure of the Owner to demand such certificates or other evidence of full compliance with these insurance requirements or failure of the Owner to identify a deficiency from evidence provided shall not be construed as a waiver of Contractor's obligation to maintain such insurance.

SC-4.2.1 Add the following to the end of Paragraph 4.2.1

In the preparation of Drawings and Specifications, Engineer has relied upon the following reports of explorations and test of sub-surface conditions at the site of the Work:

4.2.1.1 None

SC-4.3.3 Add a new Paragraph immediately after Paragraph 4.3.2:

4.3.3 In the preparation of Drawings and Specifications, Engineer has relied upon the following drawings of physical conditions in or relating to existing surface and sub-surface structures (except Underground Utilities) which are contiguous to the site of the Work:

4.3.3.1 None

SC-5.4. Delete Paragraph 5.4 and the heading entitled "Contractual Liability Insurance:" in its entirety and insert the following in its place:

5.4 The limits of liability for insurance required by Paragraph 5.3 of the General Conditions shall provide coverage for not less than the following amounts or greater where required by Laws and Regulations:

5.4.1. Workers' Compensation, and related coverages under Paragraphs 5.3.1 and 5.3.2 of the General Conditions:

5.4.1.1.	State:	Statutory
5.4.1.2.	Applicable Federal (e.g., Longshoremen's)	Statutory
5.4.1.3.	Employer's Liability	$ 200,000

5.4.1.4. Contractor shall show Owner as additional insured.

5.4.2. Contractor's Comprehensive General Liability under Paragraphs 5.3.3 through 5.3.6 of the General Conditions:

5.4.2.1 Combined Single Limit for Bodily Injury and Property Damage

$1,000,000	Each Occurrence
Or combined single limit	$2,000,000
General Aggregate	$2,000,000
Operations Aggregate	$2,000,000

5.4.2.2. Property Damage liability insurance will provide Explosion, Collapse and Underground coverages where applicable.

5.4.2.3. Personal Injury, with employment exclusion deleted

$1,000,000	Annual Aggregate
$1,000,000	Each Occurrence

5.4.3. Comprehensive Automobile Liability under Paragraph 5.3.7 of the General Conditions:

5.4.3.1. Bodily Injury:

$1,000,000	Each Person
$2,000,000	Each Occurrence

5.4.3.2 Property Damage:

$1,000,000	Each Occurrence
Or combined single limit	$2,000,000

5.4.4 Builders Risk Insurance (Fire and Extended Coverage):

5.4.4.1 100% completed value based on the insurable portion of the project

5.4.4.2 Policy must protect the interests of the Owner, Contractor, and Sub-Contractors against loss by fire, vandalism, malicious mischief, and all hazards included in a standard "All Risk" Coverage endorsement. Policies shall be in the name of the Owner and Contractor.

5.4.5 The comprehensive general liability insurance will include contractual liability insurance applicable to CONTRACTOR's obligations under paragraphs 6.30 and 6.31 of the General Conditions. Contractual Liability coverage shall provide coverage for not less than the following amounts:

5.4.5.1. Bodily Injury:

$500,000	Each Occurrence

5.4.5.2 Property Damage:

$100,000	Each Occurrence
$ N/A	Annual Aggregate

SC-6.4 Add the following language at the end of paragraph 6.4:

Contractor shall arrange for all necessary services through the local agencies at his own expense.

SC-6.7.3. Delete Paragraph 6.7.3 in its entirety and insert the following in its place:

6.7.3 ENGINEER will be allowed a reasonable time within which to evaluate each proposed substitute/ "or-equal" item. Complete written applications as detailed in Section 6.7 of the General Conditions must be received by ENGINEER at least fifteen (15) calendar days prior to the date (by end-of-business) for receipt of Bids. The burden of proof of the merit of the substitute/ "or-equal" item is upon the Bidder. ENGINEER will be the sole judge of acceptability, and ENGINEER'S decision of approval or disapproval of an item will be final. If ENGINEER approves any substitute/ "or-equal" item, such approval will be set forth in an Addendum issued to prospective Bidders. Bidders shall not rely upon approvals made in any other manner.

SC-6.7.4-6 Add new paragraphs immediately after Paragraph 6.7.3:

6.7.4 Submittals for substitute/ "or-equal" items shall include illustrative drawings, specifications, descriptive brochures, installation lists, weights, metal thickness of principal components, drive arrangements, torques, power requirements, performance curves, installation requirements, availability of spare parts, local service capability, and other items necessary for the ENGINEER to determine that the intent of the Specifications is to be met. Submittal must also include an enumeration of any and all changes required in the contract documents for incorporation of the proposed item. Incomplete submittals will not be reviewed or commented upon.

6.7.5 Submitted items that are determined to be "equal" or acceptable substitute to the named equipment or item in the specifications will be approved and commented upon by addendum to notify all Bidders of approval and any stipulations for the products use in preparation of his/her bid.

SC-6.8.3 Add a new paragraph immediately after Paragraph 6.8.2:

6.8.3. The Contractor shall not award work valued at more than fifty (50%) percent of the Contract Price to Subcontractor(s), without prior written approval of the Owner.

SC-6.21 Add the following language at the end of paragraph 6.21:

The Contractor shall provide, at the site, such equipment and medical facilities as are necessary to supply first-aid service to anyone who may be injured in connection with the work. The Contractor must report in writing to the Engineer all accidents whatsoever arising out of, or in connection with, the performance of the work, whether on or adjacent to the site, which causes death, personal injury or property damages, giving full details and statement of witnesses. In addition, if death or serious injuries or serious damages are caused, the accident shall be reported immediately by telephone or messenger to the Contractor and any subcontractor so that Contractor may promptly report the facts to the Engineer, giving full details of the accident. The Contractor shall advise his superintendent and foreman, who are on the site of the work, the name of the hospital and phone number and the name and phone number of the doctor he proposes to use in case of an accident.

SC-6.33 Add a new paragraph immediately after Paragraph 6.32:

6.33 Contractor shall require any and all subcontractors to conform to the obligations under paragraph 6.30 prior to commencing any work.

SC-9.3 Add the following language at the end of paragraph 9.3:

The Owner reserves the right to provide Resident Project Representative services for this project through the services of the Engineer. The Duties, Responsibilities, and Limitations of Authority of the Resident Project Representative will be as stated in the Agreement Between Owner and Engineer, executed for this specific Project.

SC-11.9.2 Add the following language at the end of paragraph 11.9.2:

Direct payment will only be made items specifically listed in the Bid Form, and the cost of any other work will be included in the unit price for the item to which it relates.

SC-12.2 Add the following sub-Paragraphs to Paragraph 12.2

12.2.1 For the purposes of this contract, abnormal weather conditions shall be defined as wet weather conditions that exceed the normal, reasonably expected adverse weather days for that particular place at that particular time of year. Extension of time for abnormal weather conditions will be granted for those days where precipitation is one-eighth (0.125) inches or greater and where the number of such days exceed the normal, reasonably expected adverse weather days in that particular month. No reduction in Contract Time will be required for calendar months with less than the normal adverse weather days.

12.2.2 The determination of normal adverse weather days will be based on the average number of calendar days over the last five years in which more than one-eight (0.125) inches of rain fell as measured by the "Georgia Automated Environmental Monitoring Network" station nearest to the project site, for that particular month. This data may be accessed via the following website:

http://www.weather.uga.edu

12.2.3 For the purposes of this contract, normal adverse weather days, as calculated by the method described in Paragraph 12.2.2 are listed below by month:

January	8	July	8
February	7	August	6
March	7	September	5
April	4	October	3
May	6	November	4
June	8	December	6

12.2.4 Requests for extension of Contract Time due to abnormal weather conditions must be submitted to Engineer with the monthly pay request for the month in which the delays occurred. Failure to request such extension with the pay request may invalidate the Contractor's right to an extension for these delays.

SC-12.3.1 Add the following sub-Paragraph to Paragraph 12.3:

12.3.1 If the Contractor fails to prosecute the work with such diligence as will insure the completion of each portion of the work within the Contract Time, plus any extensions made in accordance with Article 12 of the General Conditions, and if the Owner does not exercise his reservations as

set forth in Article 13 of the General Conditions, the Contractor shall continue the work, in which event, actual damages for the delay will be impossible to determine. In lieu thereof, liquidated damages in the amount of $500 per calendar day for each day that the work is delayed beyond the contract completion will be assessed to the Contractor until the work is completed.

SC-13.2 Delete Paragraph 13.2 in its entirety and insert the following in its place:

Engineer and Engineer's representatives, other representative of Owner, testing agencies, the Georgia Department of Natural Resources, the Environmental Protection Division, the Department of Labor, and any other governmental agencies with jurisdictional interests will have access to the Work at reasonable times for their observation, inspection, and testing. Contractor shall provide proper and safe conditions for such access.

SC-17.5 Add the following new Paragraphs immediately after Paragraph 17.4:

17.5 The Contractor acknowledges the requirement of the High Voltage Act of the General Assembly of Georgia by execution of the Agreement.

17.6 The Contractor shall comply with the Department of Labor Safety and Health Regulation for Construction promulgated under the Occupational Safety and Health Act of 1970 (PL 91-596) and under Section 107 of the Contract Work and Safety Standards Act (PL 91-54). These regulations are administered by the Department of Labor and the Contractor shall allow access to the project to personnel from that Department.

17.7 The Contractor shall occupy the status of an Independent Contractor and the Contractor's employees are not employees of the Owner.

GEORGIA ENVIRONMENTAL FINANCE AUTHORITY

SUPPLEMENTAL GENERAL CONDITIONS

for

FEDERALLY ASSISTED STATE REVOLVING FUND CONSTRUCTION CONTRACTS

December 7, 2022

The following standard language must be incorporated into construction contract documents and in all solicitations for offers and bids for all construction contracts or subcontracts in excess of $10,000 to be funded in whole or in part by the federally-assisted State Revolving Fund in the state of Georgia.

These Supplemental General Conditions shall not relieve the participants in this project of responsibility to meet any requirements of other portions of this construction contract or of other agencies, whether these other requirements are more or less stringent. The requirements in these Supplemental General Conditions must be satisfied for work to be funded with the State Revolving Fund.

TABLE OF CONTENTS

Instructions and General Requirements	3
DBE Compliance Form	4
DBE Compliance Checklist	6
Six Good Faith Efforts	7
Resources for Identifying DBE Subcontractors	8
Certification Regarding Equal Employment Opportunity	9
Certification Regarding Debarment, Suspension, and Other Responsible Matters	10
Changes to Approved Subcontractors Form	11
DBE Annual Report Form (5700-52A)	12
Special Provisions	13
Equal Employment Opportunity (EEO) Notice	14
EEO Construction Contract Specifications (Executive Order 11246)	15
Davis-Bacon and Related Acts	15
Wage Rate Determination (and links for forms, posters, etc.)	15
Certified Payroll Review Checklist	16

INSTRUCTIONS AND GENERAL REQUIREMENTS

It is the policy of the State Revolving Loan Fund (SRF) to promote a fair share of subcontract, materials, equipment, and service awards to small, minority, and women-owned businesses for equipment, supplies, construction, and services. Compliance with these contract provisions is required for project costs to be eligible for SRF funding. The fair share objective is a goal, not a quota. Failure on the part of the apparent successful bidder to submit required information to the loan recipient (Owner) may be considered by the Owner in evaluating whether the bidder is responsive to bid requirements.

THE PRIME CONTRACTOR MUST SUBMIT THE FOLLOWING ITEMS TO THE OWNER:

A. Before beginning the work of any contract:

1) **DBE Compliance Form and related documentation.** The Owner must submit this information to the Georgia Environmental Finance Authority (GEFA) to demonstrate compliance with Disadvantaged Business Enterprise (DBE) requirements. GEFA concurrence is recommended prior to award of the construction contract and is required prior to commencement of any SRF-funded construction. (Pages GEFA-4 and 5)
2) **Certification Regarding Equal Employment Opportunity.** This form is required for the Prime Contractor and for all subcontractors. The Prime Contractor form should be submitted with the DBE Compliance Form, and the subcontractor forms should be submitted as the subcontracts are executed. (Page GEFA-9)
3) **Certification Regarding Debarment, Suspension, and Other Responsible Matters.** This form is required for the Prime Contractor and for all subcontractors. The Prime Contractor form should be submitted with the DBE Compliance Form and the subcontractor forms should be submitted as the subcontracts are executed. (Page GEFA-10)

B. During the performance of the contract:

4) **Changes to Subcontractors Form.** If any changes, substitutions, or additions are proposed to the subcontractors included in previous GEFA concurrences, the Owner must submit this information to GEFA for prior concurrence for the affected subcontract work to be eligible for SRF funding. (Page GEFA-11)
5) **DBE Annual Report.** The Owner must submit this information to GEFA no later than October 20 of any year that the construction contract is active. (Page GEFA-12)
6) **Certified Payrolls.** These should be submitted to the Owner weekly for the Prime Contractor and all subcontractors. The Owner must maintain payroll records and make these available for inspection. Use U.S. Department of Labor form WH-347 or a similar form that contains all the information on the U.S. Department of Labor.

THE OWNER MUST SUBMIT INFORMATION FOR GEFA REVIEW AND CONCURRENCE TO:

Georgia Environmental Finance Authority
47 Trinity Ave SW
Fifth Floor
Atlanta, Georgia 30334
404-584-1000 (phone)
404-584-1069 (fax)
waterresources@gefa.ga.gov

DBE COMPLIANCE FORM

ALL INFORMATION OUTLINED ON THIS FORM IS REQUIRED FOR DBE COMPLIANCE REVIEW. THE PROPOSED PRIME CONTRACTOR AND OWNER SHOULD ENSURE THAT THIS INFORMATION IS COMPLETE PRIOR TO SUBMITTAL.

Loan Recipient _____ **SRF Loan Number** _____

PRIME CONTRACTOR'S AND OWNER'S CERTIFICATIONS:

I certify that the information submitted on and with this form is true and accurate and that this firm has met and will continue to meet the conditions of this construction contract regarding DBE solicitation and utilization. I further certify that criteria used in selecting subcontractors and suppliers were applied equally to all potential participants and that EPA Forms 6100-2 and 6100-3 were distributed to all DBE subcontractors.

_____ **Date**_____
(Prime Contractor signature)

_____
(Printed name and title)

I certify that I have reviewed the information submitted on and with this form and that it meets the requirements of the Owner's State Revolving Fund loan contract.

_____ **Date**_____
(Signature of Owner or Owner's representative)

_____
(Printed name and title)

CONTACT INFORMATION

Owner contact _____

Owner phone number and email _____

Consulting Engineer contact _____

Consulting Engineer phone number and email _____

Proposed Prime Contractor _____

Prime Contractor contact _____

Prime Contractor phone number and email _____

Proposed total contract amount $ _____

Proposed total MBE participation $ _____ **Percentage** _____ **Goal: 4.0 percent**

Proposed total WBE participation $ _____ **Percentage** _____ **Goal: 4.0 percent**

CONTINUED ON NEXT PAGE

Please submit the following with the DBE Compliance Form:

a. List of all committed and uncommitted subcontractors by trade, including company name, address, telephone number, contact person, dollar amount of subcontract, and DBE/MBE/WBE status.

b. Indicate in writing if no solicitations were made because the Prime Contractor intends to use only its own forces to accomplish the work.

c. Proof of certification by EPA, SBA, DOT (or by state, local, tribal, or private entities whose certification criteria match EPA criteria) for each subcontractor listed as a DBE, MBE, or WBE.

d. Documentation of solicitation efforts for prospective DBE firms, such as fax confirmation sheets, copies of solicitation letters and emails, printout of online solicitations, printouts of online search results, and copies and affidavits of publication in newspapers or other publications. (see also, "Six Good Faith Efforts", page GEFA-7).

   i. The Prime Contractor shall use the necessary resources to identify and directly solicit no less than three certified MBE firms and three certified WBE firms to bid in each expected subcontract trade or area. If a diligent and documented search of the recommended directories does not identify three potential certified MBE firms and three potential certified WBE firms, then the Prime Contractor shall post an advertisement in the Owner's local legal organ, the Owner's official website, a regional newspaper in a larger community in the proximity, the Prime Contractor's website, or some other appropriate resource.
   ii. The Prime Contractor is encouraged to follow-up each written, fax, or email solicitation with at least one logged phone call.
   iii. Whenever possible, post solicitations for bids or proposals for a minimum of 30 calendar days before the bid or proposal closing date.

e. Written justification for not selecting a certified DBE subcontractor that submitted a low bid for any subcontract area.

f. Certification By Proposed Prime Contractor or Subcontractor Regarding Equal Employment Opportunity (GEFA-9)

g. Certification By Proposed Prime or Subcontractor Regarding Debarment, Suspension, and Other Responsible Matters. (GEFA-10)

END OF DBE COMPLIANCE FORM

DBE COMPLIANCE CHECKLIST

THE PRIME CONTRACTOR MUST SUBMIT THE FOLLOWING ITEMS TO THE OWNER BEFORE THE WORK BEGINS:

Loan Recipient _____ **SRF Loan Number** _____

Include in Package Submittal

PRIME CONTRACTOR ONLY	TOTAL CONTRACT AMOUNT

ALL SUBCONTRACTORS, INCLUDING DBE FIRMS	TRADE	AMOUNT

ALL SUBCONTRACTORS, INCLUDING DBE FIRMS	TRADE	AMOUNT

DBE SUBCONTRACTORS ONLY	TRADE	AMOUNT

DBE SUBCONTRACTORS ONLY	TRADE	AMOUNT

PRIME CONTRACTOR ONLY *(Not applicable if self-performing all work, with no subcontracting)*

1. **DBE Compliance Form.** The Owner must sign and submit this information to the Georgia Environmental Finance Authority (GEFA) to demonstrate compliance with DBE requirements. GEFA concurrence is recommended prior to award of the construction contract and is required prior to commencement of any SRF-funded construction. **(Pages GEFA-4 and 5**)

2. **Certification Regarding Equal Employment Opportunity**. This form is required for the Prime Contractor and for all subcontractors. The Prime Contractor's form should be submitted with the DBE Compliance Form and the subcontractors' forms should be submitted as the subcontracts are executed. **(Page GEFA-9)**

3. **Certification Regarding Debarment, Suspension, and Other Responsible Matters**. This form is required for the Prime Contractor and for all subcontractors. The Prime Contractor's form should be submitted with the DBE Compliance Form and the subcontractors' forms should be submitted as the subcontracts are executed. **(Page GEFA-10)**

Uncommitted Trades

Documentation of Good Faith Efforts

Newspaper ads		Internet Websites	Fax Confirmation	Copies of Solicitation Emails/letters	Copies of phone logs
PROOF OF CERTIFICATION FOR EACH SUBCONTRACTOR LISTED AS A DBE, MBE, OR WBE					

SIX GOOD FAITH EFFORTS

These good faith efforts are required methods to ensure that DBEs have the opportunity to compete for procurements funded by EPA financial assistance dollars. Such good faith efforts are described as follows:

1. Ensure DBEs are made aware of contracting opportunities to the fullest extent practicable through outreach and recruitment activities. This will include placing DBEs on solicitation lists and soliciting them whenever there are potential sources.

2. Make information on forthcoming opportunities available to DBEs and arrange time frames for contracts and establish delivery schedules, where the requirements permit, in a way that encourages and facilitates participation by DBEs in the competitive process. This includes, whenever possible, posting solicitation for bids or proposals for a minimum of 30 calendar days before the bid or proposal closing date.

3. Consider in the contracting process whether firms competing for large contracts could subcontract with DBEs. This will include dividing total requirements when economically feasible into smaller tasks or quantities to permit maximum participation by DBEs in the competitive process.

4. Encourage contracting with a consortium of DBEs when a contract is too large for one of these firms to handle individually.

5. Use the resources, services, and assistance of the U.S. Department of Transportation (DOT), U.S. Small Business Administration (SBA), and the Minority Business Development Agency of the U.S. Department of Commerce (MBDA).

6. If the Prime Contractor awards subcontracts, it must take the steps described in items (1) through (5) listed above.

Please note that DBEs, MBEs, and WBEs must be certified by EPA, SBA, or DOT (or by state, local, tribal, or private entities whose certification criteria match EPA's). DBEs must be certified to be counted toward the Prime Contractor's MBE/WBE goals. "Self-certified" DBE subcontractors will not be counted toward the Prime Contractor's MBE/WBE goals. Depending upon the certifying agency, a DBE may be classified as a DBE, a Minority Business Enterprise (MBE), or a Women's Business Enterprise (WBE).

The Prime Contractor must employ and document the **Six Good Faith Efforts** for all subcontracts, even if the Prime Contractor has achieved the fair share objectives.

The documentation of solicitations for the **Six Good Faith Efforts** must be detailed to allow for satisfactory review. Such documentation might include fax confirmation sheets, copies of solicitation letters/emails, printouts of the online solicitations, printouts of online search results, and affidavits of publication in newspapers or other publications. The Prime Contractor is encouraged to follow up each written, fax, or email solicitation with at least one logged phone call.

The Prime Contractor should attempt to identify and solicit DBEs in the geographic proximity of the project before soliciting those located farther away.

If a DBE subcontractor fails to complete work under the subcontract for any reason, the Prime Contractor must notify the Owner in writing prior to any termination and must employ the Six Good Faith Efforts described above if using a replacement subcontractor. Any proposed changes from the approved DBE subcontractor list must be reported to the Owner and to GEFA on the *Changes to Approved Subcontractors Form* (GEFA-14) prior to initiation of the action. EPA Forms Nos. 6100-3 and 6100-4 must also be submitted to GEFA for new DBE subcontracts.

RESOURCES FOR IDENTIFYING DBE SUBCONTRACTORS

RESOURCES FOR IDENTIFYING DBE SUBCONTRACTOR'S FOR DIRECT SOLICITATION:

Georgia Department of Transportation (GDOT)
Disadvantaged Business Enterprise Program
404-631-1972
https://www.dot.ga.gov/GDOT/Pages/DBE.aspx

City of Atlanta, Georgia Office of Contract Compliance
404-330-6010
https://www.atlantaga.gov/government/mayor-s-office/executive-offices/office-of-contract-compliance

DeKalb County, Georgia
Office of Purchasing and Contracting
404-371-4730
http://dekalblsbe.info/wordpress1/wp-content/uploads/2016/05/DeKalbCountyCertifiedVendorsListMay10-2016-Final2.pdf

Fulton County, Georgia
Purchasing and Contract Compliance
404-612-5800

Metropolitan Atlanta Rapid Transit Authority (MARTA)
Disadvantaged Business Enterprise Program
404-848-4656

U.S. Environmental Protection Agency
http://www.epa.gov/osbp/dbe_team.htm

For more information about DBE compliance, contact:
waterresources@gefa.ga.gov

NOTES:

(1) The Prime Contractor shall use the necessary resources to identify and directly solicit no less than three certified MBE firms and three WBE firms to bid in each expected subcontract area or trade.
(2) If a diligent and documented search of the recommended directories does not identify three potential certified MBE firms and three potential certified WBE firms, then the Prime Contractor shall post an advertisement in the Owner's local legal organ, the Owner's official website, a regional newspaper in a larger community in the proximity, the Prime Contractor's website, or some other appropriate resource. Whenever possible, post solicitation for bids or proposals for a minimum of 30 calendar days before the bid or proposal closing date.
(3) Expenditures to a DBE that acts merely as a broker or passive conduit of funds, without performing, managing, or supervising the work of its subcontract in a manner consistent with normal business practices may not be counted.
(4) The Prime Contractor should attempt to identify and first solicit DBEs in the geographic proximity of the project before soliciting those located farther away.
(5) Contact GEFA Project Managers at 404-584-1000 or waterresources@gefa.ga.gov for further assistance or resources.

CERTIFICATION BY PROPOSED PRIME CONTRACTOR OR SUBCONTRACTOR REGARDING EQUAL EMPLOYMENT OPPORTUNITY

Proposed Prime Contractor
Proposed Subcontractor

This certification is required pursuant to Executive Order 11246, Part II, Section 203 (b), (30 F.R. 12319-25), (as amended by EO 11375 of Oct. 13, 1967, 32 FR 14303, 3 CFR, 1966–1970 Comp., p. 684; EO 12086 of Oct. 5, 1978, 43 FR 46501, 3 CFR, 1978 Comp., p. 230, EO 13672 of July 21, 2104, 79 FR 42971). Any bidder or prospective prime contractor, or any of the proposed subcontractors, shall state as an initial part of the bid or negotiations of the contract whether it has participated in any previous contract or subcontract subject to the equal opportunity clause; and, if so, whether it has filed all compliance reports due under applicable instructions.

Where the certification indicated that the prime or subcontractor has not filed a compliance report due under applicable instruction, such contractor shall be required to submit a compliance report.

(1) Bidder has participated in a previous contract or subcontract subject to the Equal Opportunity Clause.
YES _____ NO _____

(2) Compliance Reports were required to be filed in connection with such contract or subcontract.
YES _____ NO _____ (If YES, state what reports were filed and with what agency.)

(3) Bidder has filed all compliance reports due under applicable instructions, including SF-100 (EEO-1 Report).
YES _____ NO _____ (If NO, please explain in detail.)

The information above is true and complete to the best of my knowledge and belief. (A willfully false statement is punishable by law – U.S. Code, Title 18, Section 1001.)

_____
PRINTED NAME AND TITLE OF AUTHORIZED REPRESENTATIVE OF CONTRACTOR OR SUBCONTRACTOR

_____ _____
SIGNATURE OF AUTHORIZED REPRESENTATIVE **DATE**

CERTIFICATION BY PROPOSED PRIME CONTRACTOR OR SUBCONTRACTOR REGARDING DEBARMENT, SUSPENSION, AND OTHER RESPONSIBLE MATTERS

Proposed Prime Contractor
Proposed Subcontractor

Under Executive Order 12549 individuals or organizations debarred from participation in federal assistance programs may not receive an assistance award under federal program or sub-agreement there under for $25,000 or more. Accordingly, each recipient of a state loan or a contract (engineering or construction) awarded under a loan must complete the following certification (see 2 CFR §1532.220).

The prospective participant certifies to the best of its knowledge and belief that it and its principals:

(a) Are not presently debarred, suspended, proposed for debarment, declared ineligible, or voluntarily excluded from covered transactions by any federal department or agency.

(b) Have not within a three year period preceding this proposal been convicted of or had a civil judgement rendered against them for commission of fraud or a criminal offense in connection with obtaining, attempting to obtain, or performing a public (federal, state, or local) transaction or contract under a public transaction; violation of federal or state antitrust statutes or commission of embezzlement, theft, forgery, bribery, falsification or destruction of records, making false statements, or receiving stolen property;

(c) Are not presently indicted for or otherwise criminally or civilly charged by a government entity (federal, state, or local) with commission of any of the offenses enumerated in paragraph (1) (b) of this certification; and

(d) Have not within a three-year period preceding this application/proposal had one or more public transactions (federal, state, or local) terminated for cause of default.

I understand that a false statement on this certification may be grounds for rejection of this proposal or termination of the award. (A willfully false statement is punishable by law – U.S. Code, Title 18, Section 1001.)

_____

PRINTED NAME AND TITLE OF AUTHORIZED REPRESENTATIVE OF CONTRACTOR OR SUBCONTRACTOR

_____ _____

SIGNATURE OF AUTHORIZED REPRESENTATIVE **DATE**

_____ **I am unable to certify to the above statements. My explanation is as follows:**

CHANGES TO APPROVED SUBCONTRACTORS FORM

Loan Recipient _____ **SRF Loan Number** _____

CERTIFICATIONS:

I certify that the information submitted on and with this form is true and accurate and that this firm has met and will continue to meet the conditions of this construction contract regarding DBE solicitation and utilization. I further certify that criteria used in selecting subcontractors and suppliers were applied equally to all potential participants.

_____ Date_____
(Prime Contractor signature)

_____
(Printed name and title)

I certify that I have reviewed the information submitted on and with this form and that it meets the requirements of the Owner's State Revolving Fund loan contract.

_____ Date_____
(Signature of Owner or Owner's representative)

_____
(Printed name and title)

GENERAL INFORMATION:

1) If an approved subcontractor is terminated or replaced, please identify this company and briefly state reason.

Subcontractor Name:	**Trade**
Reason Terminated or Replaced	

2) For new or additional subcontractors, list name, trade, address, telephone number, contact person, dollar amount of subcontract, and DBE status.

New Subcontractor Name and Contact Person	**Trade**
Address	**Telephone Number**
Dollar Amount	**DBE Status**

1) Attach proof of certification by EPA, SBA, DOT (or by state, local, tribal, or private entities whose certification criteria match EPA's) for each subcontractor listed as a DBE, MBE, or WBE.

2) Attach documentation of Six Good Faith Efforts solicitation effort for all new subcontracts.

3) Provide justification for not selecting any certified DBE subcontractor that submitted a low bid for any subcontract area.

4) For each subcontractor, attach certifications regarding Equal Employment Opportunity (GEFA-9) and certifications regarding Debarment, Suspension, and Other responsible Matters (GEFA-10)

DBE ANNUAL REPORT
FORM (5700-52A)

This form must be completed by recipients of federal financial assistance for procurement of supplies, equipment, construction, or services. SRF loan recipients are required to submit this report to GEFA by the 20th of October for the previous period of October 1 through September 30. Please submit a "negative" report even if $0 is the amount paid to MBE/WBE subcontractors during the reporting period.

<table>
<tr><th colspan="4">ANNUAL REPORT FORM (5700-52A)</th></tr>
<tr><td colspan="2">1. PRIME CONTRACTOR</td><td colspan="2">2. REPORTING PERIOD (Complete date using current year.)
Period Ending (September 30, _____)</td></tr>
<tr><td colspan="2">3. SUBMIT TO:
Georgia Environmental Finance Authority
Attention: DBE Compliance Coordinator
47 Trinity Ave SW
Fifth Floor
Atlanta, Georgia 30303
waterresources@gefa.ga.gov</td><td colspan="2">4. LOAN RECIPIENT (Name, Address, and Telephone)</td></tr>
<tr><td>5. LOAN RECIPIENT (OWNER)
REPORTING CONTACT</td><td>PHONE:</td><td>6. TYPE OF FEDERAL FINANCIAL ASSISTANCE PROGRAM (Check one)
CWSRF _____ DWSRF_____</td><td>7. SRF LOAN NUMBER</td></tr>
<tr><td colspan="2">8. CONTRACTOR NAME AND TOTAL CONSTRUCTION CONTRACT AMOUNT</td><td colspan="2">9. ACTUAL DOLLAR AMOUNT PAIDTO MBE/WBE SUBCONTRACTORS THIS PERIOD
$ MBE_____ $ WBE_____ NEGATIVE REPORT ($0) ___</td></tr>
<tr><td colspan="2">10. RECIPIENT'S MBE/WBE GOALS
MBE 4.0 % WBE 4.0 %</td><td colspan="2">11. TOTAL DOLLARS SPENT THIS PERIOD
MBE $_____
WBE $_____
NON MBE/WBE $_____
TOTAL $ _____</td></tr>
<tr><td colspan="2">12. NAME AND TITLE OF AUTHORIZED REPRESENTATIVE OF LOAN RECIPIENT (OWNER).</td><td>13. SIGNATURE OF AUTHORIZED REPRESENTATIVE OF LOAN RECIPIENT.</td><td>14. DATE</td></tr>
<tr><th colspan="4">MBE/WBE PAYMENTS MADE DURING PERIOD</th></tr>
<tr><td colspan="2">NAME AND ADDRESS of DBE (SUB)CONTRACTOR (indicate if MBE or WBE firm)</td><td colspan="2">TOTAL DOLLAR AMOUNT PAID AND DATE PAID
$_____ DATE_____</td></tr>
<tr><td colspan="2"></td><td colspan="2"></td></tr>
<tr><td colspan="2"></td><td colspan="2"></td></tr>
<tr><td colspan="2"></td><td colspan="2"></td></tr>
</table>

GEFA-12

SPECIAL PROVISIONS

(a) The Prime Contractor is required to pay its subcontractors in accordance with the Georgia Prompt Payment Act (OCGA 13-11).

(b) The Prime Contractor is required to insert the entirety of the Davis Bacon contract requirements into all subcontracts.

(c) Sewer line and water line crossing of all roads and streets shall be done in accordance with the Georgia Department of Transportation (D.O.T.) Policies and Procedures and must comply with the Ga. D.O.T. Standard Specifications, Construction of Roads and Bridges, 1993 Edition.

(d) Construction shall be carried out so as to prevent bypassing of wastewater flow and to prevent interruption of drinking water treatment during construction. EPD must receive written notification prior to any reduction in the level of treatment and must approve all temporary modifications to the treatment process prior to the activity.

(e) Erosion and Sedimentation Control shall be accomplished in accordance with the Georgia Erosion and Sedimentation Control Act of 1975 as currently amended and NPDES General Permits (Storm Water from Construction Sites). See also epd.georgia.gov and gaswcc.georgia.gov for information regarding permits.

(f) Use of Chemicals: All chemicals used during project construction or furnished for project operation, whether herbicide, pesticide, disinfectant, polymer reactant or of other classification, must show approval of either EPA or USDA. Use of all such chemicals and disposal of residues shall be in conformance with state and local regulations as appropriate.

(g) It is the duty of the Prime Contractor, the Owner and the Engineer to ensure the construction of the project, including the letting of contracts in connection therewith, shall comply with all applicable laws and regulations and requirements of the United States of America or any agency thereof, the state of Georgia or any agency thereof, territorial, or any local government laws or political subdivision and ordnances to the extent that such requirements do not conflict with federal laws and this subchapter.

(h) EPD, EPA, and GEFA shall have access to the site and the project work at all times.

BONDS

Bonding requirements for Contracts of $100,000 or less are contained in the General Conditions. Bond requirements of contracts in excess of $100,000 are:

1. Bid guarantee equivalent to five percent of the bid price. The bid guarantee shall consist of a firm commitment such as a certified check or bid bond submitted with the bid;

2. Performance bond equal to 100 percent of the contract price, and;

3. Payment bond equal to 100 percent of the contract price. Bonds must be obtained from companies holding Certificates of Authority as acceptable sureties, issued by the U.S. Treasury.

SPECIAL NOTICE TO BIDDERS

By the submission of this bid, each bidder acknowledges that he understands and agrees to be bound by the equal opportunity requirements of EPA regulations (40 CFR Part 8, particularly Section 8.4 (b)), which shall be applicable throughout the performance of work under any contract awarded pursuant to this solicitation. Each bidder agrees that if awarded a contract, it will similarly bind contractually each subcontractor. In implementation of the foregoing policies, each bidder further understands and agrees that if awarded a contract, it must engage in affirmative action directed at promoting and ensuring equal employment opportunity in the workforce used under the contract (and that it must require contractually the same effort of all subcontractors whose subcontracts exceed $10,000.00). The bidder understands and agrees that “affirmative action” as used herein shall constitute a good faith effort to achieve and maintain minority employment in each trade in the on-site workforce used on the project.

EQUAL EMPLOYMENT OPPORTUNITY NOTICE

NOTICE OF REQUIREMENT FOR AFFIRMATIVE ACTION TO ENSURE EQUAL OPPORTUNITY (EXECUTIVE ORDER 11246)

1. The Offeror's or Bidder's attention is called to the Equal Opportunity Clause which is included in the nondiscrimination Provision and Labor Standards, EPA Form 5720-4 and the Standard Federal Equal Employment Opportunity (EEO) Construction Contract Specifications set forth herein.

2. The goals for minority and female participation, expressed in percentage terms for the Contractor's aggregate workforce in each trade on all construction work in the covered area, are as follows:

Goals for minority participation for each trade	**4.0 percent**
Goals for female participation for each trade	**4.0 percent**

   These goals are applicable to all the Contractor's construction work (whether or not it is federal or federally assisted) performed in the covered area.

   The Contractor's compliance with the Executive Order and the regulations in 41 CFR Part 60-4 shall be based on its implementation of the Equal Opportunity Clause, specific affirmative action obligations required by the specifications set forth in 41 CFR 60-4.3(a), and its efforts to meet the goals established for the geographical area where the contract resulting from this solicitation is to be performed. The hours of minority and female employment and training must be substantially uniform throughout the length of the contract, and in each trade, and the contractor shall make a good faith effort to employ minority and women evenly on each of its projects. The transfer of minority or female employees or trainees from Contractor to Contractor or from project to project for the sole purpose of meeting the Contractor's goals shall be a violation to the contract, the Executive Order, and the regulations in 41 CFR Part 60-4. Compliance with the goals will be measured against the total work hours performed.

3. The contractor shall not discriminate on the basis of race, color, national origin, or sex in the performance of this contract. The contractor shall carry out applicable requirements of 40CFR Part 33 in the award and administration of contracts awarded under EPA financial assistance agreements. Failure by the contractor to carry out these requirements is a material breach of this contract, which may result in the termination of this contract.

4. As used in this Notice, and in the contract resulting from this solicitation, the "covered area" is (insert description of the geographical area where the contract is to be performed giving the state, county, and city, if any).

EEO Construction Contract Specifications

Executive Order 11246
https://www.dol.gov/agencies/ofccp/executive-order-11246/as-amended

Davis-Bacon and Related Acts
https://www.dol.gov/agencies/whd/government-contracts/construction

INSERT WAGE RATE DETERMINATION HERE

Wage Rates (for *Heavy Construction*) are state/county specific can be found at:
http://www.dol.gov/whd/govcontracts/dbra.htm

Sample Payroll Form (WH-347) is found at:
http://www.dol.gov/whd/forms/wh347.pdf

Labor Standards Interview Form (SF-1445) is found at:
http://www.gsa.gov/portal/forms/download/115910

Davis-Bacon (WH-1321) poster is found at:
http://www.dol.gov/whd/regs/compliance/posters/fedprojc.pdf (*English*)

http://www.dol.gov/whd/regs/compliance/posters/davispan.pdf (*Spanish*)

Fair Labor Standards Act Minimum Wage poster is found at:
http://www.dol.gov/whd/regs/compliance/posters/minwagebwp.pdf (*English*)

http://www.dol.gov/whd/regs/compliance/posters/minwagespbwP.pdf (*Spanish*)

"EEO Is the Law" poster is found at:
https://www.eeoc.gov/sites/default/files/2022-10/22-088_EEOC_KnowYourRights_10_20.pdf
(*English*)

https://www.eeoc.gov/sites/default/files/2022-10/22-088_EEOC_KnowYourRightsSp_10_20.pdf
(*Spanish*)

OSHA poster is found at:
https://www.osha.gov/sites/default/files/publications/osha3165.pdf
(*English*)

https://www.osha.gov/sites/default/files/publications/osha3167.pdf
(*Spanish*)

Davis-Bacon and Related Acts

Labor Standards Provisions for Federally Assisted Contracts

Contract Provision for Contracts in Excess of $2,000.

(1) Minimum wages.

(i) All laborers and mechanics employed or working upon the site of the work will be paid unconditionally and not less often than once a week, and without subsequent deduction or rebate on any account (except such payroll deductions as are permitted by regulations issued by the Secretary of Labor under the Copeland Act (29 CFR part 3)), the full amount of wages and bona fide fringe benefits (or cash equivalents thereof) due at time of payment computed at rates not less than those contained in the wage determination of the Secretary of Labor which is attached hereto and made a part hereof, regardless of any contractual relationship which may be alleged to exist between the contractor and such laborers and mechanics.

Contributions made or costs reasonably anticipated for bona fide fringe benefits under section 1(b)(2) of the Davis-Bacon Act on behalf of laborers or mechanics are considered wages paid to such laborers or mechanics, subject to the provisions of paragraph (a)(1)(iv) of this section; also, regular contributions made or costs incurred for more than a weekly period (but not less often than quarterly) under plans, funds, or programs which cover the particular weekly period, are deemed to be constructively made or incurred during such weekly period. Such laborers and mechanics shall be paid the appropriate wage rate and fringe benefits on the wage determination for the classification of work actually performed, without regard to skill, except as provided in § 5.5(a)(4). Laborers or mechanics performing work in more than one classification may be compensated at the rate specified for each classification for the time actually worked therein: Provided that the employer's payroll records accurately set forth the time spent in each classification in which work is performed. The wage determination (including any additional classification and wage rates conformed under paragraph (a)(1)(ii) of this section) and the Davis-Bacon poster (WH-1321) shall be posted at all times by the contractor and its subcontractors at the site of the work in a prominent and accessible place where it can be easily seen by the workers.

Subrecipients may obtain wage determinations from the U.S. Department of Labor's web site, http://www.dol.gov/whd/govcontracts/dbra.htm (E-tools)

(ii)(A) The subrecipient(s), on behalf of EPA, shall require that any class of laborers or mechanics, including helpers, which is not listed in the wage determination and which is to be employed under the contract shall be classified in conformance with the wage determination. The State award official shall approve a request for an additional classification and wage rate and fringe benefits therefore only when the following criteria have been met:

(1) The work to be performed by the classification requested is not performed by a classification in the wage determination; and

(2) The classification is utilized in the area by the construction industry; and

(3) The proposed wage rate, including any bona fide fringe benefits, bears a reasonable relationship to the wage rates contained in the wage determination.

(B) If the contractor and the laborers and mechanics to be employed in the classification (if known), or their representatives, and the subrecipient(s) agree on the classification and wage rate (including the amount designated for fringe benefits where appropriate), documentation of the action taken and the request, including the local wage determination shall be sent by the subrecipient (s) to the State award official. The State award official will transmit the request, to the Administrator of the Wage and Hour Division, Employment Standards Administration, U.S. Department of Labor, Washington, DC 20210 and to the EPA DB Regional Coordinator concurrently. The Administrator, or an authorized representative, will approve, modify, or disapprove every additional classification request within 30 days of receipt and so advise the State award official or will notify the State award official within the 30-day period that additional timeis necessary.

(C) In the event the contractor, the laborers or mechanics to be employed in the classification or their representatives, and the subrecipient(s) do not agree on the proposed classification and wage rate (including the amount designated for fringe benefits, where appropriate), the award official shall refer the request and the local wage determination, including the views of all interested parties and the recommendation of the State award official, to the Administrator for determination. The request shall be sent to the EPA DB Regional Coordinator concurrently. The Administrator, or an authorized representative, will issue a determination within 30 days of receipt of the request and so advise the contracting officer or will notify the contracting officer within the 30-day period that additional time is necessary.

(D) The wage rate (including fringe benefits where appropriate) determined pursuant to paragraphs (a)(1)(ii)(B) or (C) of this section, shall be paid to all workers performing work in the classification under this contract from the first day on which work is performed in theclassification.

(iii) Whenever the minimum wage rate prescribed in the contract for a class of laborers or mechanics includes a fringe benefit which is not expressed as an hourly rate, the contractor shall either pay the benefit as stated in the wage determination or shall pay another bona fide fringe benefit or an hourly cash equivalent thereof.

(iv) If the contractor does not make payments to a trustee or other third person, the contractor may consider as part of the wages of any laborer or mechanic the amount of any costs reasonably anticipated in providing bona fide fringe benefits under a plan or program, Provided, That the Secretary of Labor has found, upon the written request of the contractor, that the applicable standards of the Davis-Bacon Act have been met. The Secretary of Labor may require the contractor to set aside in a separate account assets for the meeting of obligations under the plan or program.

(2) Withholding. The subrecipient(s), shall upon written request of the EPA Award Official or an authorized representative of the Department of Labor, withhold or cause to be withheld from the contractor under this contract or any other Federal contract with the same prime contractor, or any other federally-assisted contract subject to Davis-Bacon prevailing wage requirements, which is held by the same prime contractor, so much of the accrued payments or advances as may be considered necessary to pay laborers and mechanics, including apprentices, trainees, and helpers, employed by the contractor or any subcontractor the full amount of wages required by the contract. In the event of failure to pay any laborer or mechanic, including any apprentice, trainee, or helper, employed or working on the site of the work, all or part of the wages required by the contract, the (Agency) may, after written notice to the contractor, sponsor, applicant, or owner, take such action as may be necessary to cause the suspension of any further payment, advance, or guarantee of funds until such violations haveceased.

(3) Payrolls and basic records.

(i) Payrolls and basic records relating thereto shall be maintained by the contractor during the course of the work and preserved for a period of three years thereafter for all laborers and mechanics working at the site of the work. Such records shall contain the name, address, and social security number of each such worker, his or her correct classification, hourly rates of wages paid (including rates of contributions or costs anticipated for bona fide fringe benefits or cash equivalents thereof of the types described in section 1(b)(2)(B) of the Davis-Bacon Act), daily and weekly number of hours worked, deductions made and actual wages paid. Whenever the Secretary of Labor has found under 29 CFR 5.5(a)(1)(iv) that the wages of any laborer or mechanic include the amount of any costs reasonably anticipated in providing benefits under a plan or program described in section 1(b)(2)(B) of the Davis-Bacon Act, the contractor shall maintain records which show that the commitment to provide such benefits is enforceable, that the plan or program is financially responsible, and that the plan or program has been communicated in writing to the laborers or mechanics affected, and records which show the costs anticipated or the actual cost incurred in providing such benefits. Contractors employing apprentices or trainees under approved programs shall maintain written evidence of the registration of apprenticeship programs and certification of trainee programs, the registration of the apprentices and trainees, and the ratios and wage rates prescribed in the applicable programs.

(ii)(A) The contractor shall submit weekly, for each week in which any contract work is performed, a copy of all payrolls to the subrecipient, that is, the entity that receives the sub-grant or loan from the State capitalization grant recipient. Such documentation shall be available on request of the State recipient or EPA. As to each payroll copy received, the subrecipient shall provide written confirmation in a form satisfactory to the State indicating whether or not the project is in compliance with the requirements of 29 CFR 5.5(a)(1) based on the most recent payroll copies for the specified week. The payrolls shall set out accurately and completely all of the information required to be maintained under 29 CFR 5.5(a)(3)(i), except that full social security numbers and home addresses shall not be included on the weekly

payrolls. Instead the payrolls shall only need to include an individually identifying number for each employee (e.g., the last four digits of the employee's social security number). The required weekly payroll information may be submitted in any form desired. Optional Form WH-347 is available for this purpose from the Wage and Hour Division Web site at http://www.dol.gov/whd/forms or its successor site. The prime contractor is responsible for the submission of copies of payrolls by all subcontractors. Contractors and subcontractors shall maintain the full social security number and current address of each covered worker, and shall provide them upon request to the subrecipient(s) for transmission to the State or EPA if requested by EPA, the State, the contractor, or the Wage and Hour Division of the Department of Labor for purposes of an investigation or audit of compliance with prevailing wage requirements. It is not a violation of this section for a prime contractor to require a subcontractor to provide addresses and social security numbers to the prime contractor for its own records, without weekly submission to the subrecipient(s).

(B) Each payroll submitted shall be accompanied by a "Statement of Compliance," signed by the contractor or subcontractor or his or her agent who pays or supervises the payment of the persons employed under the contract and shall certify the following:

(1) That the payroll for the payroll period contains the information required to be provided under § 5.5 (a)(3)(ii) of Regulations, 29 CFR part 5, the appropriate information is being maintained under § 5.5 (a)(3)(i) of Regulations, 29 CFR part 5, and that such information is correct and complete;

(2) That each laborer or mechanic (including each helper, apprentice, and trainee) employed on the contract during the payroll period has been paid the full weekly wages earned, without rebate, either directly or indirectly, and that no deductions have been made either directly or indirectly from the full wages earned, other than permissible deductions as set forth in Regulations, 29 CFR part 3;

(3) That each laborer or mechanic has been paid not less than the applicable wage rates and fringe benefits or cash equivalents for the classification of work performed, as specified in the applicable wage determination incorporated into the contract.

(C) The weekly submission of a properly executed certification set forth on the reverse side of Optional Form WH-347 shall satisfy the requirement for submission of the "Statement of Compliance" required by paragraph (a)(3)(ii)(B) of this section.

(D) The falsification of any of the above certifications may subject the contractor or subcontractor to civil or criminal prosecution under section 1001 of title 18 and section 231 of title 31 of the United States Code.

(iii) The contractor or subcontractor shall make the records required under paragraph (a)(3)(i) of this section available for inspection, copying, or transcription by authorized representatives of the State, EPA or the Department of Labor, and shall permit such representatives to interview employees during working hours on the job. If the contractor or subcontractor fails to submit the required records or to make them available, the Federal agency or State may, after written notice to the contractor, sponsor, applicant, or owner, take such action as may be necessary to cause the suspension of any further payment, advance, or guarantee of funds. Furthermore, failure to submit the required records upon request or to make such records available may be grounds for debarment action pursuant to 29 CFR 5.12.

(4) Apprentices and trainees--

(i) Apprentices. Apprentices will be permitted to work at less than the predetermined rate for the work they performed when they are employed pursuant to and individually registered in a bona fide apprenticeship program registered with the U.S. Department of Labor, Employment and Training Administration, Office of Apprenticeship Training, Employer and Labor Services, or with a State Apprenticeship Agency recognized by the Office, or if a person is employed in his or her first 90 days of probationary employment as an apprentice in such an apprenticeship program, who is not individually registered in the program, but who has been certified by the Office of Apprenticeship Training, Employer and Labor Services or a State Apprenticeship Agency (where appropriate) to be eligible for probationary employment as an apprentice. The allowable ratio of apprentices to journeymen on the job site in any craft classification shall not be greater than the ratio permitted to the contractor as to the entire work force under the registered program. Any worker listed on a payroll at an apprentice wage rate, who is not registered or otherwise employed as stated above, shall be paid not less than the applicable wage rate on the wage determination for the classification of work actually performed.

In addition, any apprentice performing work on the job site in excess of the ratio permitted under the registered program shall be paid not less than the applicable wage rate on the wage determination for the work actually performed. Where a contractor is performing construction on a project in a locality other than that in which its program is registered, the ratios and wage rates (expressed in percentages of the journeyman's hourly rate) specified in the contractor's or subcontractor's registered program shall be observed. Every apprentice must be paid at not less than the rate specified in the registered program for the apprentice's level of progress, expressed as a percentage of the journeymen hourly rate specified in the applicable wage determination. Apprentices shall be paid fringe benefits in accordance with the provisions of the apprenticeship program. If the apprenticeship program does not specify fringe benefits, apprentices must be paid the full amount of fringe benefits listed on the wage determination for the applicable classification. If the Administrator determines that a different practice prevails for the applicable apprentice classification, fringes shall be paid in accordance with that determination. In the event the Office of Apprenticeship Training, Employer and Labor Services, or a State Apprenticeship Agency recognized by the Office, withdraws approval of an apprenticeship program, the contractor will no longer be permitted to utilize apprentices at less than the applicable predetermined rate for the work performed until an acceptable program is approved.

(ii) Trainees. Except as provided in 29 CFR 5.16, trainees will not be permitted to work at less than the predetermined rate for the work performed unless they are employed pursuant to and individually registered in a program which has received prior approval, evidenced by formal certification by the U.S. Department of Labor, Employment and Training Administration. The ratio of trainees to journeymen on the job site shall not be greater than permitted under the plan approved by the Employment and Training Administration. Every trainee must be paid at not less than the rate specified in the approved program for the trainee's level of progress, expressed as a percentage of the journeyman hourly rate specified in the applicable wage determination. Trainees shall be paid fringe benefits in accordance with the provisions of the trainee program. If the trainee program does not mention fringe benefits, trainees shall be paid the full amount of fringe benefits listed on the wage determination unless the Administrator of the Wage and Hour Division determines that there is an apprenticeship program associated with the corresponding journeyman wage rate on the wage determination which provides for less than full fringe benefits for apprentices. Any employee listed on the payroll at a trainee rate who is not registered and participating in a training plan approved by the Employment and Training Administration shall be paid not less than the applicable wage rate on the wage determination for the classification of work actually performed. In addition, any trainee performing work on the job site in excess of the ratio permitted under the registered program shall be paid not less than the applicable wage rate on the wage determination for the work actually performed. In the event the Employment and Training Administration withdraws approval of a training program, the contractor will no longer be permitted to utilize trainees at less than the applicable predetermined rate for the work performed until an acceptable program is approved.

(iii) Equal employment opportunity. The utilization of apprentices, trainees and journeymen under this part shall be in conformity with the equal employment opportunity requirements of Executive Order 11246, as amended, and 29 CFR part 30.

(5) Compliance with Copeland Act requirements. The contractor shall comply with the requirements of 29 CFR part 3, which are incorporated by reference in this contract.

(6) Subcontracts. The contractor or subcontractor shall insert in any subcontracts the clauses contained in 29 CFR 5.5(a)(1) through (10) and such other clauses as the EPA determines may by appropriate, and also a clause requiring the subcontractors to include these clauses in any lower tier subcontracts. The prime contractor shall be responsible for the compliance by any subcontractor or lower tier subcontractor with all the contract clauses in 29 CFR 5.5.

(7) Contract termination; debarment. A breach of the contract clauses in 29 CFR 5.5 may be grounds for termination of the contract, and for debarment as a contractor and a subcontractor as provided in 29 CFR 5.12.

(8) Compliance with Davis-Bacon and Related Act requirements. All rulings and interpretations of the Davis-Bacon and Related Acts contained in 29 CFR parts 1, 3, and 5 are herein incorporated by reference in this contract.

(9) Disputes concerning labor standards. Disputes arising out of the labor standards provisions of this contract shall not be subject to the general disputes clause of this contract. Such disputes shall be resolved in accordance with the procedures of the Department of Labor set forth in 29 CFR parts 5, 6, and 7. Disputes within the

meaning of this clause include disputes between the contractor (or any of its subcontractors) and Subrecipient(s), State, EPA, the U.S. Department of Labor, or the employees or their representatives.

(10) Certification of eligibility.

(i) By entering into this contract, the contractor certifies that neither it (nor he or she) nor any person or firm who has an interest in the contractor's firm is a person or firm ineligible to be awarded Government contracts by virtue of section 3(a) of the Davis-Bacon Act or 29 CFR 5.12(a)(1).

(ii) No part of this contract shall be subcontracted to any person or firm ineligible for award of a Government contract by virtue of section 3(a) of the Davis-Bacon Act or 29 CFR 5.12(a)(1).

(iii) The penalty for making false statements is prescribed in the U.S. Criminal Code, 18 U.S.C. 1001.

Contract Provision for Contracts in Excess of $100,000.

(a) Contract Work Hours and Safety Standards Act. The subrecipient shall insert the following clauses set forth in paragraphs (a)(1), (2), (3), and (4) of this section in full in any contract in an amount in excess of $100,000 and subject to the overtime provisions of the Contract Work Hours and Safety Standards Act. These clauses shall be inserted in addition to the clauses required by Item 3, above or 29 CFR 4.6. As used in this paragraph, the terms laborers and mechanics include watchmen and guards.

(1) Overtime requirements. No contractor or subcontractor contracting for any part of the contract work which may require or involve the employment of laborers or mechanics shall require or permit any such laborer or mechanic in any workweek in which he or she is employed on such work to work in excess of forty hours in such workweek unless such laborer or mechanic receives compensation at a rate not less than one and one-half times the basic rate of pay for all hours worked in excess of forty hours in such workweek.

(2) Violation; liability for unpaid wages; liquidated damages. In the event of any violation of the clause set forth in paragraph (a)(1) of this section the contractor and any subcontractor responsible therefore shall be liable for the unpaid wages. In addition, such contractor and subcontractor shall be liable to the United States (in the case of work done under contract for the District of Columbia or a territory, to such District or to such territory), for liquidated damages. Such liquidated damages shall be computed with respect to each individual laborer or mechanic, including watchmen and guards, employed in violation of the clause set forth in paragraph (a)(1) of this section, in the sum of $10 for each calendar day on which such individual was required or permitted to work in excess of the standard workweek of forty hours without payment of the overtime wages required by the clause set forth in paragraph (a)(1) of this section.

(3) Withholding for unpaid wages and liquidated damages. The subrecipient, upon written request of the EPA Award Official or an authorized representative of the Department of Labor, shall withhold or cause to be withheld, from any moneys payable on account of work performed by the contractor or subcontractor under any such contract or any other Federal contract with the same prime contractor, or any other federally-assisted contract subject to the Contract Work Hours and Safety Standards Act, which is held by the same prime contractor, such sums as may be determined to be necessary to satisfy any liabilities of such contractor or subcontractor for unpaid wages and liquidated damages as provided in the clause set forth in paragraph (b)(2) of this section.

(4) Subcontracts. The contractor or subcontractor shall insert in any subcontracts the clauses set forth in paragraph (a)(1) through (4) of this section and also a clause requiring the subcontractors to include these clauses in any lower tier subcontracts. The prime contractor shall be responsible for compliance by any subcontractor or lower tier subcontractor with the clauses set forth in paragraphs (a)(1) through (4) of this section.

(b) In addition to the clauses contained in Item 3, above, in any contract subject only to the Contract Work Hours and Safety Standards Act and not to any of the other statutes cited in 29 CFR 5.1, the Subrecipient shall insert a clause requiring that the contractor or subcontractor shall maintain payrolls and basic payroll records during the course of the work and shall preserve them for a period of three years from the completion of the contract for all laborers and mechanics, including guards and watchmen, working on the contract. Such records shall contain the name and address of each such employee, social security number, correct classifications, hourly rates of wages paid, daily and weekly number of hours worked, deductions made, and actual wages paid. Further, the Subrecipient shall insert in any such contract a clause providing that the records to be maintained under this paragraph shall be made available by the contractor or subcontractor for inspection, copying, or transcription by authorized representatives of the (write the name of agency) and the Department of Labor, and the contractor or subcontractor will permit such representatives to interview employees during working hours on the job

(5) Compliance Verification:

(a) The subrecipient shall periodically interview a sufficient number of employees entitled to DB prevailing wages (covered employees) to verify that contractors or subcontractors are paying the appropriate wage rates. As provided in 29 CFR 5.6(a)(6), all interviews must be conducted in confidence. The subrecipient must use Standard Form 1445 (SF 1445) or equivalent documentation to memorialize the interviews. Copies of the SF 1445 are available from EPA on request.

(b) The subrecipient shall establish and follow an interview schedule based on its assessment of the risks of noncompliance with DB posed by contractors or subcontractors and the duration of the contract or subcontract. At a minimum, the subrecipient should conduct interviews with a representative group of covered employees within two weeks of each contractor or subcontractor's submission of its initial weekly payroll data and two weeks prior to the estimated completion date for the contract or subcontract. Subrecipients must conduct more frequent interviews if the initial interviews or other information indicates that there is a risk that the contractor or subcontractor is not complying with DB. Subrecipients shall immediately conduct necessary interviews in response to an alleged violation of the prevailing wage requirements. All interviews shall be conducted in confidence.

(c) The subrecipient shall periodically conduct spot checks of a representative sample of weekly payroll data to verify that contractors or subcontractors are paying the appropriate wage rates. The subrecipient shall establish and follow a spot check schedule based on its assessment of the risks of noncompliance with DB posed by contractors or subcontractors and the duration of the contract or subcontract. At a minimum, if practicable, the subrecipient should spot check payroll data within two weeks of each contractor or subcontractor's submission of its initial payroll data and two weeks prior to the completion date the contract or subcontract. Subrecipients must conduct more frequent spot checks if the initial spot check or other information indicates that there is a risk that the contractor or subcontractor is not complying with DB. In addition, during the examinations the subrecipient shall verify evidence of fringe benefit plans and payments thereunder by contractors and subcontractors who claim credit for fringe benefit contributions.

(d) The subrecipient shall periodically review contractors and subcontractors' use of apprentices and trainees to verify registration and certification with respect to apprenticeship and training programs approved by either the U.S Department of Labor or a state, as appropriate, and that contractors and subcontractors are not using disproportionate numbers of, laborers, trainees and apprentices. These reviews shall be conducted in accordance with the schedules for spot checks and interviews described in Item 5(b) and (c) above.

(e) Subrecipients must provide a report of compliance to the Georgia Environmental Finance Authority detailing compliance efforts and results. This report will be submitted with or prior to the loan recipient's first request for funding of construction costs, prior to final disbursement of funds from the loan, and as requested during the project.

(f) Subrecipients must immediately report potential violations of the DB prevailing wage requirements to the EPA DB coordinator and to the appropriate DOL Wage and Hour District Office listed at http://www.dol.gov/whd/america2.htm.

CERTIFIED PAYROLL REVIEW CHECKLIST

(This is a *recommended Certified Payroll Review Checklist for the Owner's use*.)

CONTRACT ID City of CW/DWSRF#00 - 000	**PRIME CONTRACTOR/SUBCONTRACTOR** X Construction
GENERAL WAGE DECISION AND DATE (Insert number and date)	**PAYROLL PERIOD ENDING**

INSTRUCTIONS: This checklist is to be used in conjunction with projects requiring Davis-Bacon Wage Rates and compliance reviews. All certified payrolls are to be date stamped upon receipt from the prime contractor.

Payroll Information Checklist:

_____ Prime Contractor's or subcontractor's name and address
_____ Contract ID numbers (GEFA SRF No.)
_____ Week ending.
_____ Project location.

_____ Employee ID or Last four digits of Social Security
- _____ Number Social Security Number removed
- _____ Employee's work classification
- _____ Identification of OJTs, apprentices, and program levels (%) on payrolls.
- _____ Verify that OJT and Apprentice Program documentation is in project files.

_____ Daily and weekly employee hours worked in each job classification.
- _____ Daily and weekly employee overtime (or premium) hours worked
- _____ Total weekly hours worked on all jobs (prevailing and non-prevailing wage).
- _____ Base rate shown for each employee, overtime (or premium) rate shown when worked.
- _____ Verify correct wage rates are being paid.
- _____ Verify overtime is being paid correctly (over 40 hrs/wk, and Time and a half)
- _____ Week's gross wages
- _____ Week's itemized deductions.
- _____ Week's net wages paid

_____ Compliance statement attached.
- _____ Method of fringe benefit payment described by checking either box (4)(a) or (4)(b).
- _____ Fringe benefit package information in file and updated as needed (if 4(a) is checked)
- _____ Exceptions explanation for fringe benefit (4)(c).
- _____ Signature.

Compliance Review Checklist (for field reviews):

_____ Verify work classifications reported are consistent with the work performed.
_____ Compare payrolls with wage rate interviews when conducted.
_____ Compare number of employees and hours worked with project documentation.

REVIEWED BY:	**DATE**

GEFA-16

"General Decision Number: GA20250289 04/11/2025

Superseded General Decision Number: GA20240289

State: Georgia

Construction Type: Heavy

County: Hall County in Georgia.

HEAVY CONSTRUCTION PROJECTS
Note: Contracts subject to the Davis-Bacon Act are generally required to pay at least the applicable minimum wage rate required under Executive Order 14026 or Executive Order 13658. Please note that these Executive Orders apply to covered contracts entered into by the federal government that are subject to the Davis-Bacon Act itself, but do not apply to contracts subject only to the Davis-Bacon Related Acts, including those set forth at 29 CFR 5.1(a)(1).

If the contract is entered into on or after January 30, 2022, or the contract is renewed or extended (e.g., an option is exercised) on or after January 30, 2022:	. Executive Order 14026 generally applies to the contract. . The contractor must pay all covered workers at least $17.75 per hour (or the applicable wage rate listed on this wage determination, if it is higher) for all hours spent performing on the contract in 2025.
If the contract was awarded on or between January 1, 2015 and January 29, 2022, and the contract is not renewed or extended on or after January 30, 2022:	. Executive Order 13658 generally applies to the contract. . The contractor must pay all covered workers at least $13.30 per hour (or the applicable wage rate listed on this wage determination, if it is higher) for all hours spent performing on that contract in 2025.

The applicable Executive Order minimum wage rate will be adjusted annually. If this contract is covered by one of the Executive Orders and a classification considered necessary for performance of work on the contract does not appear on this wage determination, the contractor must still submit a conformance request.

Additional information on contractor requirements and worker protections under the Executive Orders is available at http://www.dol.gov/whd/govcontracts.

Modification Number	Publication Date
0	01/03/2025
1	04/11/2025

* ELEC0613-003 03/03/2025

	Rates	Fringes
ELECTRICIAN	$ 38.65	33%

---

* SUGA2017-004 04/15/2021

	Rates	Fringes
CARPENTER	$ 21.64	3.90
CEMENT MASON/CONCRETE FINISHER	$ 19.02	3.29
LABORER: Common or General	$ 13.98 **	1.38
LABORER: Pipelayer	$ 17.11 **	3.23
OPERATOR: Backhoe/Excavator/Trackhoe	$ 24.17	4.70
OPERATOR: Bulldozer	$ 16.29 **	0.00
OPERATOR: Crane	$ 25.45	0.00
OPERATOR: Loader	$ 17.86	0.65
OPERATOR: Roller	$ 11.89 **	0.00

WELDERS - Receive rate prescribed for craft performing operation to which welding is incidental.

==========

** Workers in this classification may be entitled to a higher minimum wage under Executive Order 14026 ($17.75) or 13658 ($13.30). Please see the Note at the top of the wage determination for more information. Please also note that the minimum wage requirements of Executive Order 14026 are not currently being enforced as to any contract or subcontract to which the states of Texas, Louisiana, or Mississippi, including their agencies, are a party.

Note: Executive Order (EO) 13706, Establishing Paid Sick Leave for Federal Contractors applies to all contracts subject to the Davis-Bacon Act for which the contract is awarded (and any solicitation was issued) on or after January 1, 2017. If this contract is covered by the EO, the contractor must provide employees with 1 hour of paid sick leave for every 30 hours they work, up to 56 hours of paid sick leave each year. Employees must be permitted to use paid sick leave for their own illness, injury or other health-related needs, including preventive care; to assist a family member (or person who is like family to the employee) who is ill, injured, or has other health-related needs, including preventive care; or for reasons resulting from, or to assist a family member (or person who is like family to the employee) who is a victim of, domestic violence, sexual assault, or stalking. Additional information on contractor requirements and worker protections under the EO is available at https://www.dol.gov/agencies/whd/government-contracts.

Unlisted classifications needed for work not included within the scope of the classifications listed may be added after award only as provided in the labor standards contract clauses

(29CFR 5.5 (a) (1) (iii)).

The body of each wage determination lists the classifications and wage rates that have been found to be prevailing for the type(s) of construction and geographic area covered by the wage determination. The classifications are listed in alphabetical order under rate identifiers indicating whether the particular rate is a union rate (current union negotiated rate), a survey rate, a weighted union average rate, a state adopted rate, or a supplemental classification rate.

Union Rate Identifiers

A four-letter identifier beginning with characters other than ""SU"", ""UAVG"", ?SA?, or ?SC? denotes that a union rate was prevailing for that classification in the survey. Example: PLUM0198-005 07/01/2024. PLUM is an identifier of the union whose collectively bargained rate prevailed in the survey for this classification, which in this example would be Plumbers. 0198 indicates the local union number or district council number where applicable, i.e., Plumbers Local 0198. The next number, 005 in the example, is an internal number used in processing the wage determination. The date, 07/01/2024 in the example, is the effective date of the most current negotiated rate.

Union prevailing wage rates are updated to reflect all changes over time that are reported to WHD in the rates in the collective bargaining agreement (CBA) governing the classification.

Union Average Rate Identifiers

The UAVG identifier indicates that no single rate prevailed for those classifications, but that 100% of the data reported for the classifications reflected union rates. EXAMPLE: UAVG-OH-0010 01/01/2024. UAVG indicates that the rate is a weighted union average rate. OH indicates the State of Ohio. The next number, 0010 in the example, is an internal number used in producing the wage determination. The date, 01/01/2024 in the example, indicates the date the wage determination was updated to reflect the most current union average rate.

A UAVG rate will be updated once a year, usually in January, to reflect a weighted average of the current rates in the collective bargaining agreements on which the rate is based.

Survey Rate Identifiers

The ""SU"" identifier indicates that either a single non-union rate prevailed (as defined in 29 CFR 1.2) for this classification in the survey or that the rate was derived by computing a weighted average rate based on all the rates reported in the survey for that classification. As a weighted average rate includes all rates reported in the survey, it may include both union and non-union rates. Example: SUFL2022-007 6/27/2024. SU indicates the rate is a single non-union prevailing rate or a weighted average of survey data for that classification. FL indicates the State of Florida. 2022 is the year of the survey on which these classifications and rates are based. The next number, 007 in the example, is an internal number used in producing the wage determination. The date,

6/27/2024 in the example, indicates the survey completion date for the classifications and rates under that identifier.

?SU? wage rates typically remain in effect until a new survey is conducted. However, the Wage and Hour Division (WHD) has the discretion to update such rates under 29 CFR 1.6(c)(1).

State Adopted Rate Identifiers

The ""SA"" identifier indicates that the classifications and prevailing wage rates set by a state (or local) government were adopted under 29 C.F.R 1.3(g)-(h). Example: SAME2023-007 01/03/2024. SA reflects that the rates are state adopted. ME refers to the State of Maine. 2023 is the year during which the state completed the survey on which the listed classifications and rates are based. The next number, 007 in the example, is an internal number used in producing the wage determination. The date, 01/03/2024 in the example, reflects the date on which the classifications and rates under the ?SA? identifier took effect under state law in the state from which the rates were adopted.

WAGE DETERMINATION APPEALS PROCESS

1) Has there been an initial decision in the matter? This can be:

a) a survey underlying a wage determination
b) an existing published wage determination
c) an initial WHD letter setting forth a position on a wage determination matter
d) an initial conformance (additional classification and rate) determination

On survey related matters, initial contact, including requests for summaries of surveys, should be directed to the WHD Branch of Wage Surveys. Requests can be submitted via email to davisbaconinfo@dol.gov or by mail to:

Branch of Wage Surveys
Wage and Hour Division
U.S. Department of Labor
200 Constitution Avenue, N.W.
Washington, DC 20210

Regarding any other wage determination matter such as conformance decisions, requests for initial decisions should be directed to the WHD Branch of Construction Wage Determinations. Requests can be submitted via email to BCWD-Office@dol.gov or by mail to:

Branch of Construction Wage Determinations
Wage and Hour Division
U.S. Department of Labor
200 Constitution Avenue, N.W.
Washington, DC 20210

2) If an initial decision has been issued, then any interested party (those affected by the action) that disagrees with the decision can request review and reconsideration from the Wage and Hour Administrator (See 29 CFR Part 1.8 and 29 CFR Part 7). Requests for review and reconsideration can be submitted via email to dba.reconsideration@dol.gov or by mail to:

Wage and Hour Administrator
U.S. Department of Labor
200 Constitution Avenue, N.W.
Washington, DC 20210

The request should be accompanied by a full statement of the interested party's position and any information (wage payment data, project description, area practice material, etc.) that the requestor considers relevant to the issue.

3) If the decision of the Administrator is not favorable, an interested party may appeal directly to the Administrative Review Board (formerly the Wage Appeals Board). Write to:

Administrative Review Board
U.S. Department of Labor
200 Constitution Avenue, N.W.
Washington, DC 20210.

==========

END OF GENERAL DECISION"

GEORGIA ENVIRONMENTAL FINANCE AUTHORITY

AMERICAN IRON AND STEEL
SPECIAL CONDITIONS AND INFORMATION

For

FEDERALLY ASSISTED
STATE REVOLVING LOAN FUND
CONSTRUCTION CONTRACTS

April 11, 2014

The following standard language must be incorporated into construction contract documents and in all solicitations for offers and bids for all construction contracts or subcontracts to be funded, in whole or in part, through the Federally-assisted State Revolving Fund in the State of Georgia for projects subject to the American Iron and Steel requirements.

These Special Conditions shall not relieve the participants in this project of responsibility to meet any requirements of other portions of this construction contract or of other agencies, whether these other requirements are more or less stringent. The requirements in these Special Conditions must be satisfied in order for work to be funded with the State Revolving Fund.

TABLE OF CONTENTS

General Requirements	**GEFA/AIS-3**
Appendix 1 – Definitions	**GEFA/AIS-5**
Appendix 2 – Sample Certifications for Manufacturer Certification	**GEFA/AIS-8**
Appendix 3 – P.L. 113-76, Consolidated Appropriations Act, 2014	**GEFA/AIS-11**

GENERAL REQUIREMENTS

These Special Conditions are based on guidance provided by the United States Environmental Protection Agency (EPA). Public Law 113-76, the Consolidated Appropriations Act, 2014 (Act), includes an "American Iron and Steel" (AIS) requirement that requires State Revolving Loan Fund (SRF) assistance recipients to use iron and steel products that are produced in the United States for projects in this project. A copy of Section 436 of the Act is found in Appendix 3.

The products and materials subject to these requirements will be defined in Appendix 1 of these special conditions.

The Owner must maintain documentation of compliance with the AIS requirements. The documentation that the Owner maintains will be subject to review and audit by representatives of the state of Georgia, the EPA, the EPA Office of the Inspector General, and other federal authorities.

The Prime Contractor must provide certifications of compliance for all products subject to AIS requirements to the Owner prior to requesting payments for those products. The Owner or the Engineer may require certifications of compliance with submittals and shop drawings for these products as part of the submittal review process.

All manufacturing processes for a covered iron or steel product, as further defined in Appendix 1, must take place in the United States. If a covered product is taken out of the US for any part of the manufacturing process, it becomes foreign source material.

The EPA recommends the use of a step certification process to document the locations of the manufacturing processes involved with the production of steel and iron materials. A step certification is a process under which each handler (supplier, fabricator, manufacturer, processor, etc.) of the iron and steel products certifies that its step in the process was domestically performed. Each time a step in the manufacturing process takes place, the manufacturer delivers its work along with a certification of its origin. A certification should include the name of the manufacturer, the location of the manufacturing facility where the product or process took place (not its headquarters), a description of the product or item being delivered, and a signature by a manufacturer's responsible party. Attached in Appendix 2 is a sample step certification.

Alternatively, the final manufacturer that delivers the iron or steel product to the worksite, vendor, or contractor, may provide a certification asserting that all manufacturing processes for the product and for its iron and steel components occurred in the United States. The EPA states that additional documentation may be needed if the certification lacks important information and recommends step certification as the best practice. A sample final manufacturer certification is attached in Appendix 2.

The Prime Contractor may document that incidental and generally low cost components, as defined in Appendix 1, are compliant with AIS requirements under the De Minimis Waiver issued by the EPA. For these items, the Contractor must provide the Owner with documentation of costs for these items, including invoices, and a report of types and categories of materials to which the waiver is applied, the total cost of incidental components covered by the waiver for each category, and the calculations by which the total cost of materials incorporated into the project was determined. A sample De Minimis report is attached is Appendix 2.

Contractor, supplier, and manufacturer records are subject to review and audit by the EPA, its Inspector General, and other federal authorities.

Failure to comply with these requirements may delay, limit, or prevent the disbursement of SRF funds to the Owner. Violations of AIS requirements will require correction by the Contractor as determined by the Owner and Engineer, including replacement of deficient products with compliant products and compensation for costs and other damages that may result. Violations may also subject the Owner, the Contractor, and suppliers to other enforcement actions within the discretion of the EPA and other federal authorities.

The Act permits EPA to issue waivers for a case or category of cases in which EPA finds (1) that applying these requirements would be inconsistent with the public interest; (2) iron and steel products are not produced in the US in sufficient and reasonably available quantities and of a satisfactory quality; or (3) inclusion of iron and steel products produced in the US will increase the cost of the overall project by more than 25 percent. The Contractor should notify the Owner and Engineer immediately if it finds that a waiver may be required.

By submitting a bid for this project and by executing this construction contract, the Contractor acknowledges to and for the benefit of the Owner and the state of Georgia that it understands that the goods and services under this Agreement are being funded with monies made available by the Clean Water State Revolving Fund or the Drinking Water State Revolving Fund and that Federal law authorizing these Funds contains provisions commonly known as "American Iron and Steel" that requires all of the iron and steel products used in the project to be produced in the United States ("American Iron and Steel Requirement") including iron and steel products provided by the Contactor pursuant to this Agreement. The Contractor hereby represents and warrants to and for the benefit of the Owner and the state of Georgia that (a) the Contractor has reviewed and understands the American Iron and Steel Requirement, (b) all of the iron and steel products used in the project will be and/or have been produced in the United States in a manner that complies with the American Iron and Steel Requirement, unless a waiver of the requirement is approved, and (c) the Contractor will provide any further verified information, certification or assurance of compliance with this paragraph, or information necessary to support a waiver of the American Iron and Steel Requirement, as may be requested by the Owner or the state of Georgia. Notwithstanding any other provision of this Agreement, any failure to comply with this paragraph by the Contractor shall permit the Owner or the state of Georgia to recover as damages against the Contractor any loss, expense, or cost (including without limitation attorney's fees) incurred by the Owner or the state of Georgia resulting from any such failure (including without limitation any impairment or loss of funding, whether in whole or in part, from the state of Georgia or any damages owed to the state of Georgia by the Owner). The Owner and the Contractor agree that the state of Georgia, as a lender to the Owner for the funding of its project, is a third-party beneficiary and neither this paragraph (nor any other provision of this Agreement necessary to give this paragraph force or effect) shall be amended or waived without the prior written consent of the state of Georgia.

Appendix 1 – Definitions

For purposes of the Clean Water State Revolving Fund (CWSRF) and Drinking Water State Revolving Fund (DWSRF) projects that must comply with the AIS requirement, an iron or steel product is one of the following made primarily of iron or steel that is permanently incorporated into the project:

Lined or unlined pipes or fittings;
Manhole Covers;
Municipal Castings (defined in more detail below);
Hydrants;
Tanks;
Flanges;
Pipe clamps and restraints;
Valves;
Structural steel (defined in more detail below);
Reinforced precast concrete (defined in more detail below); and
Construction materials (defined in more detail below).

Product primarily of Iron or steel: The product must be made of greater than 50% iron or steel, measured by cost. If one of the listed products is not made primarily of iron or steel, United States (US) provenance is not required, except as required for reinforced precast concrete. If a product is composed of more than 50% iron or steel, but is not listed in Section 436 (a) (2) of the Act, it is not required to be produced in the US. Alternatively, the iron or steel in such a product can be sourced from outside the US.

Steel: An alloy that includes at least 50 percent iron and between 0.02 and 2 percent carbon and may include other elements. Other alloys of iron are not required to be produced in the US.

Produced in the United States: Production in the US of the iron or steel products used in the project requires that all manufacturing processes, including application of coatings, must take place in the United States, with the exception of metallurgical processes involving refinement of steel additives. All manufacturing processes includes processes such as melting, refining, forming, rolling, drawing, finishing, fabricating and coating. Further, if a domestic iron and steel product is taken out of the US for any part of the manufacturing process, it becomes foreign source material. However, raw materials such as iron ore, limestone and iron and steel scrap are not covered by the AIS requirement, and the material(s), if any, being applied as a coating are similarly not covered. Non-iron or steel components of an iron and steel product may come from non-US sources. For example, for products such as valves and hydrants, the individual non-iron and steel components do not have to be of domestic origin.

Municipal Castings: Municipal castings are cast iron or steel infrastructure products that are melted and cast. They typically provide access, protection, or housing for components incorporated into utility owned drinking water, storm water, wastewater, and surface infrastructure. They are typically made of grey or ductile iron, or steel. Examples of municipal castings include access hatches, ballast screen, benches, bollards, cast bases, cast iron hinged hatches, cast iron riser rings, catch basin inlets, cleanout/monument boxes, construction covers and frames, curb and corner guards, curb openings, detectable warning plates, downspout shoes, drainage grates, frames & curb inlets, inlets, junction boxes, lampposts, manhole covers, rings & frames, risers, meter boxes, steel hinged hatches, steel riser rings, trash receptacles, tree grates, tree guards, trench grates, and valve boxes.

Structural Steel: Structural steel is rolled flanged shapes, having at least one dimension of their cross-section 3 inches or greater, which are used in the construction of bridges, buildings, ships, railroad rolling stock, and for numerous other constructional purposes. Such shapes are designated as wide-flange shapes, standard I-beams, channels, angles, tees and zees. Other shapes include H-piles, sheet piling, tie plates, cross ties, and those for other special purposes.

Reinforced Precast Concrete: While reinforced precast concrete may not be at least 50% iron or steel, in this particular case, the reinforcing rebar must be produced in the US and meet the same standards as for any other iron or steel product. Additionally, the casting of the concrete product must take place in the US. The cement and other raw materials used in concrete production are not required to be of domestic origin. If the reinforced concrete is cast at the construction site, the reinforcing rebar is considered to be a construction material and must be produced in the US.

Construction Materials subject to AIS: Construction materials are those articles, materials, or supplies made primarily of iron and steel, that are permanently incorporated into the project, not including mechanical and/or electrical components, equipment and systems. Some of these products may overlap with what is also considered "structural steel". This includes, but is not limited to, the following products: welding rods, wire rod, bar, angles, concrete reinforcing bar, wire, wire cloth, wire rope and cables, tubing, framing, joists, trusses, fasteners (i.e., nuts and bolts), decking, grating, railings, stairs, access ramps, fire escapes, ladders, wall panels, dome structures, roofing, ductwork, surface drains, cable hanging systems, manhole steps, fencing and fence tubing, guardrails, doors, gates, and screens.

Construction Materials not subject to AIS: Mechanical and/or electrical components, equipment and systems are not considered construction materials. Mechanical equipment is typically that which has motorized parts and/or is powered by a motor. Electrical equipment is typically any machine powered by electricity and includes components that are part of the electrical distribution system.

The following examples, including their appurtenances necessary for their intended use and operation, are NOT considered construction materials: pumps, motors, gear reducers, drives, variable frequency drives (VFDs), mixers, blowers/aeration equipment, compressors, meters, electric/pneumatic/manual accessories used to operate valves (such as valve actuators), gates, motorized screens (such as traveling screens), sensors, controls, switches, supervisory control and data acquisition (SCADA), membrane bioreactor systems, membrane filtration systems, filters, clarifiers and clarifier mechanisms, rakes, grinders, disinfection systems, dewatering equipment, presses (including belt presses), conveyors, cranes, HVAC (excluding ductwork), water heaters, heat exchangers, generators, cabinetry and housings (such as electrical boxes/enclosures), lighting fixtures, electrical conduit, emergency life systems, metal office furniture, shelving, laboratory equipment, and analytical instrumentation.

Items temporarily used during construction, which are removed from the project site upon completion of the project, are not required to be made of U.S. Iron or Steel. For example, trench boxes or scaffolding are not considered construction materials subject to AIS requirements.

Incidental Components compliant with AIS under the De Minimis Waiver: This waiver permits the use of de minimis incidental components that may otherwise be prohibited under AIS. These de minimis items may cumulatively comprise no more than a total of 5 percent of the total cost of the materials used in and incorporated into the project. The cost of an individual item may not exceed 1 percent of the total cost of the materials used in and incorporated into the project.

These items are miscellaneous, generally low-cost components that are essential for, but incidental to, the construction and are permanently incorporated into the project. For many of these incidental components, the country of manufacture and the availability of alternatives are not always readily or reasonably identifiable prior to procurement in the normal course of business. For other incidental components, the country of manufacture may be known, but the miscellaneous character in conjunction with the low cost, individually and in total, as typically procured in bulk, mark them as properly incidental. Examples of incidental components include small washers, screws, fasteners (i.e., nuts and bolts), miscellaneous wire, corner bead, ancillary tube.

Examples of items that are not incidental and are not covered by the De Minimis Waiver include significant process fittings (i.e., tees, elbows, flanges, and brackets), distribution system fittings and valves, force main valves, pipes for sewer collection and/or water distribution, treatment and storage tanks, large structural support structures.

Items covered as compliant under this waiver must be documented in a report to the Owner to demonstrate that they are both incidental and that they fall within the cost allowances of this waiver. The costs of these items must be documented by invoices. The report must include a listing of types and categories of materials to which the waiver is applied, the total cost of incidental components covered by the Waiver for each category, and the calculations by which the total cost of materials incorporated into the project was determined.

Appendix 2 – Sample Certifications
Step Certification

The following information is provided as a sample letter of step certification for American Iron and Steel compliance. Documentation must be provided on company letterhead. This is to be provided by each handler (supplier, fabricator, manufacturer, processor, etc.). Each time a step in the manufacturing process takes place, the handler delivers its work along with a certification of its origin.

Date

Company Name
Company Address
City, State Zip

Subject: American Iron and Steel Step Certification for Project (Insert project name and SRF number)

I, (company representative), certify that the (melting, bending, coating, galvanizing, cutting, etc.) process for (manufacturing or fabricating) the following products and/or materials shipped or provided for the subject project is in full compliance with the American Iron and Steel requirement as mandated in EPA's State Revolving Fund Programs.

List of items, products and/or materials:

If any of the above compliance statements change while providing material to this project we will immediately notify the prime contractor and the engineer.

Signed by company representative

Appendix 2 – Sample Certifications
Final manufacturer certification

The following information is provided as a sample letter of the final manufacturer to certify American Iron and Steel compliance for the entire manufacturing process. Documentation must be provided on company letterhead.

Date

Company Name
Company Address
City, State Zip

Subject: American Iron and Steel Certification for Project (Insert project name and SRF number)

I, (company representative), certify that the following products and/or materials shipped/provided to the subject project are in full compliance with the American Iron and Steel requirement of P.L. 113-76 and as mandated in EPA's State Revolving Fund Programs.

List of items, products and/or materials:

If any of the above compliance statements change while providing material to this project we will immediately notify the prime contractor and the engineer.

Signed by company representative

Appendix 2 – Sample Certifications
Contractor De Minimis Report

Owner: (Owner Name)
SRF Project No: (SRF Number)
Project Description: (Contract title or brief description)
Date: (Date of report)
Submitted by (name & title): (Contractor representative)
Company Name

LIST OF MATERIALS OR CATEGORIES OF MATERIALS PERMANENTLY INCORPORATED INTO THE PROJECT	COST
Category or Item	$1,000.00
Category or Item	$1,000.00
Category or Item	$1,000.00
Category or Item	$1,000.00
Category or Item	$1,000.00
Category or Item	$1,000.00
Category or Item	$1,000.00
Category or Item	$1,000.00
Category or Item	$1,000.00
Category or Item	$1,000.00
Total Permanent Materials	**$10,000.00**

1 % of total material cost	**$100.00**	**Maximum cost for individual item waived**
5 % of total material cost	**$500.00**	**Maximum cumulative cost for category waived**

LIST OF MATERIALS OR CATEGORIES OF MATERIALS COVERED BY DE MINIMIS WAIVER	COST	COMPLIANT (Yes/No)
Category or Item	$100.00	Yes
Category or Item	$100.00	Yes
Category or Item	$100.00	Yes
Category or Item	$100.00	Yes
Category or Item	$100.00	Yes
Total De Minimis Items	**$500.00**	Yes

INVOICES ATTACHED FOR DE MINIMIS ITEMS.

Appendix 3 – P.L. 113-76, Consolidated Appropriations Act, 2014

The Act states:

Sec. 436 (a)(1) None of the funds made available by a State water pollution control revolving fund as authorized by title VI of the Federal Water Pollution Control Act (33 U.S.C. 1381 et seq.) or made available by a drinking water treatment revolving loan fund as authorized by section 1452 of the Safe Drinking Water Act (42 U.S.C. 300j–12) shall be used for a project for the construction, alteration, maintenance, or repair of a public water system or treatment works unless all of the iron and steel products used in the project are produced in the United States.

(2) In this section, the term ''iron and steel products'' means the following products made primarily of iron or steel: lined or unlined pipes and fittings, manhole covers and other municipal castings, hydrants, tanks, flanges, pipe clamps and restraints, valves, structural steel, reinforced precast concrete, and construction materials.

(b) Subsection (a) shall not apply in any case or category of cases in which the Administrator of the Environmental Protection Agency (in this section referred to as the ''Administrator'') finds that—

(1) applying subsection (a) would be inconsistent with the public interest;

(2) iron and steel products are not produced in the United States in sufficient and reasonably available quantities and of a satisfactory quality; or

(3) inclusion of iron and steel products produced in the United States will increase the cost of the overall project by more than 25 percent.

(c) If the Administrator receives a request for a waiver under this section, the Administrator shall make available to the public on an informal basis a copy of the request and information available to the Administrator concerning the request, and shall allow for informal public input on the request for at least 15 days prior to making a finding based on the request. The Administrator shall make the request and accompanying information available by electronic means, including on the official public Internet Web site of the Environmental Protection Agency.

(d) This section shall be applied in a manner consistent with United States obligations under international agreements.

(e) The Administrator may retain up to 0.25 percent of the funds appropriated in this Act for the Clean and Drinking Water State Revolving Funds for carrying out the provisions described in subsection (a)(1) for management and oversight of the requirements of this section.

(f) This section does not apply with respect to a project if a State agency approves the engineering plans and specifications for the project, in that agency's capacity to approve such plans and specifications prior to a project requesting bids, prior to the date of the enactment of this Act.

TECHNICAL SPECIFICATIONS

SECTION 01020
ALLOWANCES

PART 1 – GENERAL

A. The Contractor shall include in his bid proposal the allowances stated herein. The final amount of any allowance item listed herein shall be adjusted accordingly by change order to reflect actual cost.

PART 2 – PRODUCT

A. The Contractor shall allow the sum indicated in the Bid Form for Supplemental Work Allowance (SWA). SWA shall be utilized to incorporate cost changes for any additional authorized work into the scope of work up to the amount in the Bid Form. Contract change orders shall be enforced for contract changes over and above this amount. These SWA's shall authorize the Contractor to perform additions to the work, but the Contractor shall perform no work until written authorization has been delivered to the Contractor by the Owner/Engineer. Contractor should not expect that any SWA's will be issued; SWA's shall be issued at the discretion of the Owner only.

The value of any work covered by a SWA shall be determined in one of the following ways:

1. Where the work involved is covered by unit prices contained in the Contract Documents, by application of unit prices to the quantities of the item involved (subject to the provisions of the General Conditions).

2. By mutual acceptance of a lump sum by Contractor and the Owner.

3. On the basis of the cost of the work plus a Contractor's Fee for overhead and profit.

B. The Contractor shall allow the sum indicated in the Bid Form for Electrical Service Allowance. The Electrical Service Allowance shall be utilized to reflect the actual cost of installation/establishment of utility power at the site, including any fees associated with establishing service. Georgia Power will be responsible for bringing power to the site and establishing a metered service. Should the Contractor require any overhead or profit for allowing such a sum within his/her bid, that amount should be added into the line item of their choosing. Any additional cost associated with coordinating the work with Georgia Power shall be included under the line item of the Contractor's choosing.

C. The Contractor shall allow the sum indicated in the Bid Form for Natural Gas Service Allowance. The Natural Gas Service Allowance shall be utilized to reflect the actual cost of installation/establishment of gas service at the auxiliary power supply on site, including any fees associated with establishing service. Atlanta Gas Light will be responsible for bringing power to the site and establishing a metered service. Should the Contractor require any overhead or profit for allowing such a sum within his/her bid, that amount should be added into the line item of their choosing. Any additional cost associated with coordinating the work with Atlanta Gas Light shall be included under the line item of the Contractor's choosing.

D. The Contractor shall allow the sum indicated in the Bid Form for Groundwater Wells #4 & #5 Rehabilitation Allowance. The Groundwater Wells #4 & #5 Rehabilitation Allowance shall be utilized to engage the services of a hydrogeologist to provide testing oversight/inspection and prepare and submit final water quality/pump test report for each well; allowance shall also be used to engage a laboratory and sub-contractor(s) to provide sediment removal, air burst cleaning, post-cleaning CCTV, 72-hr pump test, data reporting/record keeping, water quality laboratory testing, and all associated and ancillary work required per Spec. Section 80001. Should the Contractor require any overhead or profit for allowing such a sum within his/her bid, that amount should be added into the line item of their choosing. Any additional cost associated with coordinating the work shall be included under the line item of the Contractor's choosing.

PART 3 – EXECUTION

A. Amounts stated shall include all taxes, coordination and handling that may be required to provide the equipment to the owner. Owner may choose to delay the purchase of equipment to the end of the Contract.

END OF SECTION

SECTION 01025
MEASUREMENT AND PAYMENT

PART 1 – GENERAL

1.01 SCOPE OF WORK

A. This Section describes the methods by which measurement will be made of the quantities for which payment will be made for the Project.

B. The Bid lists each item of the Project for which payment will be made. No payment will be made for any items other than those listed in the Bid.

C. Required items of work and incidentals necessary for the satisfactory completion of the work which are not specifically listed in the Bid, and which are not specified in this Section to be measured or to be included in one of the items listed in the Bid, shall be considered as incidental to the work and whose cost shall be included in the item of the Bidder's choice. All costs thereof, including Contractor's overhead costs and profit, shall be considered as included in the lump sum or unit prices bid for the various Bid items. The Contractor shall prepare the Bid accordingly.

D. Work includes furnishing all labor, equipment, tools and materials, which are not furnished by the Owner and performing all operations required to complete the work satisfactorily, in place, as specified and as indicated on the Drawings.

1.02 MEASUREMENT OF WORK

A. Measurement methods delineated in the individual specification sections complement the criteria of this section. In the event of conflict, the requirements of the individual specification section govern.

B. Work shall be measured by the Engineer or his representative with assistance from the Contractor prior to preparation of a payment request by the Contractor.

C. Unit quantities that are measured in place shall be measured as they are placed. The Contractor shall give the Engineer a minimum of two days' notice for making all required measurements.

D. Materials that must be measured as delivered shall be measured at the time of delivery by the Engineer or his representative; the Contractor shall provide sufficient advance notice so that such measurements can be made.

E. Work necessary for a complete and operational job, such as relocation of mailboxes

or fences, removal of trees, relocation of utilities, graveling / maintaining driveways and driving lanes, field engineering, clearing and grubbing, traffic control, etc., not specifically identified as a pay item shall be included in the unit price bid of the Bidder's choosing. No additional payments will be made for such activities.

1.03 ESTIMATED QUANTITIES

All estimated quantities for unit price items, stipulated in the BID FORM, or other Contract Documents, are approximate and are to be used as a basis for comparing the bids submitted for the Project. The actual amounts of work done and materials furnished under unit price items may differ from the estimated quantities. The basis of payment for work and materials will be the actual amount of work done and materials furnished. The Contractor agrees to make no claim for damages, anticipated profits or otherwise on account of any difference between the amounts of work actually furnished and the estimated amounts included in the BID FORM. The Contractor will not be paid for any work which exceeds the quantity set forth in the BID FORM without a change order issued before the work is performed unless specifically ordered in writing by the Engineer. The Contractor will provide assistance to the Engineer to check quantities and elevations when so requested.

1.04 MEASUREMENT OF QUANTITIES

A. Measurement by Weight – Concrete reinforcing steel, rolled or formed steel or other metal shapes will be measured by handbook weights. Welded assemblies will be measured by handbook or scale weight.

B. Measurement by Volume – Measured by cubic dimension using mean length, width and height or thickness.

C. Measurement by Area – Measured by square dimension using mean length and width or radius.

D. Linear Measurement – Measured by linear dimension, at the item centerline or mean chord.

E. Stipulated Sum/Price Measurement – Items measured by weight, volume, area, or linear means or combination, as appropriate, as a completed item or unit of the Work.

1.05 PROGRESS PAYMENTS

A. Progress payments shall be based on percentage of work complete for lump sum pay items and units installed for unit price pay items.

B. All items of Work not specifically listed in the Bid Schedule shall be considered incidental to the construction, and the cost of all such work and material shall be

included in the item of the Contractors choice.

C. All items listed for measurement and payment shall include all materials, labor, and equipment necessary to successfully and satisfactorily complete Work specified.

D. Payment – The Contractor will receive payment only for the items listed in the Bid Schedule of his contract, and no separate payments will be made for the work under any section of the Contract Documents except as provided for in the Bid Form. Where measurements are required to be made by the Engineer, for the payment of a pay item, the failure of the Contractor to give the adequate notification or failure of the Contractor to give the engineer assistance for the measurement shall result in the forfeiture of payment for the work or item which was not measured.

1.06 SUPPLEMENTAL WORK ALLOWANCE

A. Supplemental Work Allowances (SWA's) shall be utilized to incorporate cost changes for any additional authorized work into the scope of work up to the amount budgeted in the BID FORM. Contract change orders shall be enforced for contract changes over and above the amount budgeted as SWA. SWA's shall authorize the Contractor to perform additions to work, but the Contractor shall perform no work until written authorization has been delivered to the Contractor by the Engineer or Owner. Contractor should not expect that any SWA's will be issued; SWA's shall be issued at the discretion of the Owner only.

The value of any work covered by a SWA shall be determined in one of the following ways:

1. Where the work involved is covered by unit prices contained in the Contract Documents, by application of unit prices to the quantities of the item involved (subject to the provisions of General Conditions, Article 11, Paragraph 11.3 inclusive).

2. By mutual acceptance of a lump sum by Contractor and the Owner.

3. On the basis of the cost of the work plus a Contractor's Fee for overhead and profit. This basis shall be as established for Change Orders in General Conditions.

PART 2 – PRODUCTS

2.01 STORED MATERIALS

A. Partial payment shall be made for approved materials stored at the project site, provided invoices for said materials are furnished in accordance with payment request submittal and shop drawings for said materials have been approved.

PART 3 – EXECUTION

3.01 CLEARING & GRUBBING

A. Measurement: Measurement for Clearing & Grubbing shall be on a lump sum basis and shall include all clearing & grubbing required for the project site, including the wells site & along the proposed water main alignment.

B. Payment: Payment for Clearing & Grubbing shall be on the basis of the lump sum price provided in the BID FORM and includes clearing and grubbing for all areas shown in the plans where the proposed work conflicts with existing vegetation/trees, and includes all trimming, tree removal, clearing, grubbing, root raking, hauling, disposal, and all labor, materials, tools, and equipment required.

3.02 DEMOLITION

A. Measurement: Measurement for Demolition shall be on a lump sum basis.

B. Payment: Payment for Demolition shall be on the basis of the lump sum price provided in the BID FORM and includes the demolition/removal of all existing site features in conflict with the proposed improvements as shown on the Plans, and includes hauling, disposal, and all labor, materials, tools, and equipment required.

3.03 GROUNDWATER WELLS #4 & #5 IMPROVEMENTS COMPLETE

A. Measurement: Measurement for Groundwater Wells #4 & #5 Improvements Complete shall be on a lump sum basis.

B. Payment: Payment for Groundwater Wells #4 & #5 Improvements Complete shall be on the basis of the lump sum price provided in the BID FORM. Payment shall include all ancillary labor, materials, tools, testing, hauling/transportation, mobilization, and equipment required for a complete and functional project, including but limited to:

- Site grading, including all import fill material and removal, hauling, and disposal of excess materials
- Gravel access drive & well site pad (incl. Tensar geogrid & GAB)
- Concrete sidewalk/walking areas and external chemical storage areas
- Protective bollards
- Yard hydrant installation (incl. all valves, fittings, etc.)
- Asphalt parking area (incl. Tensar geogrid & GAB)
- Chain link security fencing & gates
- Two (2) Groundwater Wells construction
    - Grundfos submersible pumps
    - Cables, supports, brackets, centralizers, hardware, etc.

    - Electrical & controls improvements
    - Discharge piping, fittings, transitions/connections, valves, & well casing pipe
    - Well pump enclosures
    - Support slabs (incl. Tensar geogrid & crushed stone)
    - All other ancillary and miscellaneous work required to install the groundwater wells in accordance with the Construction Plans and Spec. Sections 432133 & 02514

- Chemical feed building
    - Foundation installation per Structural Sheets
    - Prefabricated concrete structure installed per drawings
    - Mechanical/HVAC improvements
    - Electrical improvements (incl. wiring, conduits, equipment, etc.)
    - Interior/exterior lighting improvements
    - All plumbing fixtures/appurtenances
    - Water heater
    - Water service tap & lines
    - Chemical feed system for fluoride & chlorine
        - Eight (8) Grundfos chemical feed pumps per Spec. Section 70001
        - Feed line tubing/piping, valves, fittings, saddle taps, injection quills, hardware, etc.
        - Raceway & trench cover installation
    - San. sewer drain lines, cleanouts, and saddle tap to existing main
    - Chemical containment pallets & ramps
    - Ultrasonic flow meters
    - Flanged DI piping, fittings, & valves
    - Pipe supports
    - Pipe penetrations (incl. coring, link seals, & grouting)
    - Gutters & downspouts
    - All other ancillary and miscellaneous work required to install the chemical feed building in accordance with Spec. Section 02513 & the applicable drawings

- Covered steel structure
    - Stamped engineering design plans and applicable fees
    - Foundation/footers per detail & note on Sheet C9.4
    - Steel structure/shelter installed per detail drawings
    - Gutters & downspouts
    - All other ancillary and miscellaneous work required to install the steel structure in accordance with Section 90001 and the applicable drawings (provided by Renegade)

- Isolated chemical spill containment system (incl. floor drains, piping, fittings, and precast structures.
- All restrained joint & flanged ductile iron yard piping, fittings, & valves located up to and including the 8”x6” reducer located outside of the backflow vault (see Sheets C4.0 & C4.1)
- Pipe coating/lining and painting
- Backflow installation
    - Double Check Detector Assembly (DCDA)
    - Pipe supports & blocking
    - Precast concrete vault
    - Access hatch
    - Ladder
    - Stone bedding & Tensar geogrid
    - Pipe, fittings, and valves

- Natural gas generator
    - Concrete generator slab (incl Tensar geogrid & crushed stone)
    - Generator
    - Electrical work

- Electrical/Controls & SCADA improvements, implementation, and ancillary items not furnished & installed by the utility provider (GA Power)
- All other ancillary and miscellaneous items required to provide a complete and functional project as shown and described in the Construction Plans, Details, and Specifications.

3.04 WATER MAIN – OPEN CUT

A. Measurement: Measurement for Water Main – Open Cut shall be on a per linear foot basis.

B. Payment: Payment for Water Main – Open Cut shall be on the basis of the unit price provided in the BID FORM and shall include the cost of pipe of various materials and sizes, excavation, bedding, & backfill, all adaptors/transitions/couplings, thrust blocking, restrained joint glands/gaskets, fittings (bends, tees, crosses, reducers, etc.), connecting to existing water lines, pipe cutting, and all freight/hauling, labor, materials, tools, testing, and equipment required.

3.05 WATER MAIN – HORIZONTAL DIRECTIONAL DRILL

A. Measurement: Measurement for Water Main – Horizontal Directional Drill shall be on a per linear foot basis.

B. Payment: Payment for Water Main – Horizontal Directional Drill shall be on the basis of the unit price provided in the BID FORM and shall include the cost of

various sizes and materials of pipe, excavation, bedding, & backfill, pipe cutting, fusing/welding, directional drill operation, drilling fluid, excavation of launching & receiving pits, and all freight/hauling, labor, materials, tools, testing, and equipment required.

3.06 WATER MAIN – OPEN CUT ROADS

A. Measurement: Measurement for Water Main – Open Cut Roads shall be on a per linear foot basis.

B. Payment: Payment for Water Main – Open Cut Roads shall be on the basis of the unit price provided in the BID FORM and shall include the cost of pipe of various materials and sizes, excavation, bedding, & backfill, Class "A" concrete, asphalt surface course, all adaptors/transitions/couplings, thrust blocking, restrained joint glands/gaskets, fittings (bends, tees, crosses, reducers, etc.), connecting to existing water lines, pipe cutting, and all freight/hauling, labor, materials, tools, testing, and equipment required.

3.07 TAPPING SLEEVE & VALVE INSTALLATION

A. Measurement: Measurement for Tapping Sleeve & Valve Installation shall be on a per each basis.

B. Payment: Payment for Tapping Sleeve & Valve Installation shall be on the basis of the unit price provided in the BID FORM and shall include the cost of tapping sleeve and valve assemblies of various sizes, tapping/connecting to existing water mains, valve riser & box/cover, and all freight/hauling, labor, materials, tools, testing, and equipment required.

3.08 CUT, CAP, & ABANDON WATER LINES

A. Measurement: Measurement for Cut, Cap, & Abandon Water Lines shall be on a per each basis.

B. Payment: Payment for Cut, Cap, & Abandon Water Lines shall be on the basis of the unit price provided in the BID FORM and shall include the cost of all excavations, isolating lines, pipe cutting, installation of two (2) ductile iron caps, backfill, and all freight/hauling, labor, materials, tools, and equipment required.

3.09 WATER SERVICE TRANSFER

A. Measurement: Measurement for Water Service Transfer shall be on a per each basis.

B. Payment: Payment for Water Service Transfer shall be on the basis of the unit price provided in the BID FORM and shall include the cost of disconnecting the existing pipe, new piping/tubing to match existing size, directional drill operation (if required), couplings/adapters, and all freight/hauling, labor, materials, tools,

testing, and equipment required to transfer existing water service lines to the new main.

3.10 TRAFFIC CONTROL

A. Measurement: Measurement for Traffic Control shall be on a lump sum basis for the entire project, including the wells site and along the proposed water main alignment shown in the BID FORM.

B. Payment: Payment for Traffic Control shall be at the lump sum price provided in the BID FORM and shall include all traffic control operations, labor, materials, signage, procedures, devices, and equipment required to adhere to the latest MUTCD, GDOT, and local standards and recommendations throughout construction.

3.11 EROSION CONTROL

A. Measurement: Measurement for Erosion Control shall be on a lump sum basis for the entire project, including the wells site and along the proposed water main alignment.

B. Payment: Payment for Erosion Control shall be on the basis of the lump sum price provided in the BID FORM and shall include all NPDES permitting, NOI filing, inspection, sampling, record keeping, reporting, ES&PC signage, silt fence, check dams, temporary & permanent grassing, NOT filing, and all labor, materials, tools, testing, and equipment required.

3.12 LANDSCAPING REPLACEMENTS

A. Measurement: Measurement for Landscaping Replacements shall be on a lump sum basis.

B. Payment: Payment for Landscaping Replacements shall be on the basis of the lump sum price provided in the BID FORM and shall include the cost of replacing and/or relocating in kind any and all disturbed landscaping and landscaping features, including fencing, shrubbery, trees, planter beds, irrigation systems, specific grassing, planter beds, and all hauling/freight, labor, materials, tools, testing, and equipment required.

END OF SECTION

SECTION 01300
SUBMITTALS

PART 1 – GENERAL

1.01 SECTION INCLUDES

A. Submittal Procedures

B. Construction Progress Schedules

C. Product Data

D. Shop Drawings

E. Samples

F. Design Data

G. Test Reports

H. Certificates

I. Manufacturer's Instructions

J. Manufacturer's Field Reports

K. Erection Drawings

1.02 RELATED SECTIONS – NOT USED

1.03 SUBMITTAL PROCEDURES

A. Deliver submittals to Engineer in acceptable form, either electronic copy or three (3) hard copies.

B. Sequentially number the transmittal form. Revise submittals with original number and a sequential alphabetic suffix. Resubmit as specified for initial submittal. Indicate on revised drawings all changes which have been made including those requested by the Engineer.

C. Identify Project, Contractor, Subcontractor or supplier; pertinent drawing and detail number, and specification section number, as appropriate.

D. Apply Contractor's stamp, signed or initialed certifying that review, approval, verification of Products required, field dimensions, adjacent construction work and coordination of information is in accordance with the requirements of the work and Contract Documents. Submittal without the Contractor's stamp will be returned to Contractor without Engineer's review.

E. Make all submittals far enough in advance of scheduled dates for installation to provide all required time for reviews, for securing necessary approvals, for possible revision and resubmittal, and for placing orders and securing delivery. In scheduling, allow sufficient time for the Engineer's review following the receipt of the submittal. Coordinate submission of related items. For each submittal for review, allow 15 days excluding delivery time to and from the Contractor.

F. Identify variations from Contract Documents and Product or system limitations which may be detrimental to successful performance of the completed work.

G. Provide space for Contractor and Architect/Engineer review stamps.

H. When revised for resubmission, identify all changes made since previous submission.

I. Distribute copies of reviewed submittals to concerned parties. Instruct recipients to promptly report any inability to comply with requirements.

1.04 CONSTRUCTION PROGRESS SCHEDULES

A. Submit initial schedule in triplicate within 15 days after date established in Notice to Proceed.

B. After reviewed by the Engineer, revise and resubmit as required.

C. Submit revised schedules with each Application for Payment, identifying changes since previous version.

D. Submit a computer generated or horizontal bar chart with separate line for each major portion of work or operation, identifying first workday of each week.

E. Show complete sequence of construction by activity, identifying work of separate stages and other logically grouped activities. Indicate the early and late start, early and late finish, float dates, and duration.

F. Indicate estimated percentage of completion for each item of work at each submission.

G. Indicate submittal dates required for shop drawings, product data, samples, and

product delivery dates, including those furnished by Owner and required by Allowances.

1.05 PRODUCT DATA

A. Product Data for Review:
   1. Submitted to Engineer for review for the limited purpose of checking for conformance with information given and the design concept expressed in the contract documents.

   2. After review, provide copies and distribute in accordance with Submittal Procedures article above.

B. Submit the number of copies which the Contractor requires, plus one (1) copy which will be retained by the Engineer or electronic copy.

C. Mark each copy to identify applicable products, models, options, and other data. Supplement manufacturers' standard data to provide information specific to this Project.

D. Indicate Product utility and electrical characteristics, utility connection requirements, and location of utility outlets for service for functional equipment and appliances.

E. After review, distribute in accordance with the Submittal Procedures article above.

1.06 SHOP DRAWINGS

A. Contractor shall submit a minimum of three (3) hard copies OR an electronic copy of each shop drawing to the Engineer for review.

B. Submitted to Engineer for review for the limited purpose of checking for conformance with information given and the design concept expressed in the contract documents. Review of shop drawings by Engineer shall not relieve Contractor of his responsibility for the accuracy of the shop drawings for the furnishing of all materials and equipment required by the contract even though such items may not be indicated on the shop drawings reviewed by Engineer.

C. Shop drawings shall include applicable technical information, drawings, diagrams, performance curves, schedules, templates, calculations, instructions, measurements and similar information as applicable to the specific item for which the shop drawing is prepared.

D. Do <u>not</u> use Engineer's Drawings for shop or erection purposes.

E. Each shop drawing copy shall bear a Contractor's stamp showing they have been checked. Shop drawings submitted to the Engineer without the Contractor's stamp will be returned to the Contractor without review.

F. No review will be given to partial submittals of shop drawings for items which interconnect and/or are interdependent. It is the Contractor's responsibility to assemble the shop drawings for all such interconnecting and/or interdependent items, check them and then make one submittal to the Engineer.

G. Schedule of Submittals – Within 30 days of Contract award and prior to any shop drawing submittal, the Contractor shall submit a schedule showing the estimated submittal date and the desired approval date for each shop drawing anticipated. Time lost due to unacceptable submittals shall be the Contractor's responsibility.

1.07 SAMPLES

A. Samples for Review -

1. Submitted to Engineer for review for the limited purpose of checking for conformance with information given and the design concept expressed in the contract documents.

2. After review, produce duplicates and distribute in accordance with SUBMITTAL PROCEDURES article above.

B. Samples for Information –

1. Submitted for the Engineer's knowledge as contract administrator or for the Owner.

C. Include identification on each sample, with full Product information.

D. Submit the number of samples specified in individual specification sections; one of which will be retained by Engineer.

E. Review samples which may be used in the Work are indicated in individual specification sections.

F. Samples will not be used for testing purposes unless specifically stated in the specification section.

1.08 DESIGN DATA

A. Submit for the Engineer's knowledge as contract administrator or for the Owner.

B. Submit for information for the limited purpose of assessing conformance with information given and the design concept expressed in the contract documents.

1.09 TEST REPORTS

A. Submit for the Engineer's knowledge as contract administrator or for the owner.

B. Submit test reports for information for the limited purpose of assessing conformance with information given and the design concept expressed in the contract documents.

1.10 CERTIFICATES

A. When specified in individual specification sections, submit certification by the manufacturer, installation/application subcontractor, or the Contractor to Engineer, in quantities specified for product Data.

B. Indicate material or product conforms to or exceeds specified requirements. Submit supporting reference data, affidavits, and certifications as appropriate.

C. Certificates may be recent or previous test results on material or Product, but must be acceptable to Engineer.

1.11 MANUFACTURER'S INSTRUCTION

A. When specified in individual specification sections, submit printed instructions for delivery, storage, assembly, installation, start-up, adjusting, and finishing, to Engineer for delivery to Owner in quantities specified for Product Data.

B. Indicate special procedures, perimeter conditions requiring special attention, and special environmental criteria required for application or installation.

1.12 MANUFACTURER'S FIELD REPORTS

A. Submit reports for the Engineer's benefit as contract administrator or for the Owner.

B. Submit report in duplicate within 15 days of observation to Engineer for information.

C. Submit for information for the limited purpose of assessing conformance with information given and the design concept expressed in the contract documents.

1.13 ERECTION DRAWINGS

A. Submit drawings for the Engineer's benefit as contract administrator or for the Owner.

B. Submit for information for the limited purpose of assessing conformance with information given and the design concept expressed in the contract documents.

C. Data indicating inappropriate or unacceptable work may be subject to action by the Engineer or Owner.

1.14 REVIEWED SHOP DRAWINGS

A. Engineer Review –

3. Acceptable submittals will be marked "Approved." A minimum of one (1) copy will be retained by the Engineer for Engineer's and the Owner's use and the remaining copies will be returned to the Contractor.

4. Submittals requiring minor corrections before the product is acceptable will be marked "Furnish as Corrected." The Contractor may order, fabricate and shop the items included in the submittals provided the indicated corrections are made.

5. Submittals marked "Revise and Submit" must be revised to reflect required changes and the initial review procedure repeated.

6. The "Rejected" notation is used to indicate products which are not acceptable. Upon return of a submittal so marked, the Contractor shall repeat the initial review procedure utilizing acceptable products.

7. Only two copies of items marked "Revise and Submit" and "Rejected" will be reviewed and marked. One copy will be retained by the Engineer and the other copy with all remaining unmarked copies will be returned to the Contractor for resubmittal.

B. No work or products shall be installed without a drawing or submittal bearing the "Approved" or "Furnish as Corrected" notation. The Contractor shall maintain at the job site a complete set of shop drawings bearing the Engineer's stamp.

C. Substitutions – In the event the Contractor obtains the Engineer's approval for the use of products other than those which are listed first in the Contract Documents, the Contractor shall, at the Contractor's own expense and using methods approved by the Engineer, make any changes to structures, piping and electrical work that may be necessary to accommodate these products.

D. Use of the “Approved” or “Furnish as Corrected” notation on shop drawings or other submittals is general and shall not relieve the Contractor of the responsibility of furnishing products of the proper dimension, size, quality, quantity, materials and all performance characteristics, to efficiently perform the requirements and intent of the Contract Documents. The Engineer’s review shall not relieve the Contractor of the responsibility of errors of any kind on the shop drawings. Review is intended only to assure conformance with the design concept of the Project and compliance with the information given in the Contract Documents.

PART 2 – PRODUCTS: - NOT USED

PART 3 – EXECUTION: - NOT USED

END OF SECTION

SECTION 01410
TESTING SERVICES

PART 1 – GENERAL

1.01 SECTION INCLUDES

A. Selection and Payment

B. Contractor Submittals

C. Testing Agency Responsibilities

D. Testing Agency Reports

E. Limits on Testing Authority

F. Contractor Responsibilities

G. Schedule of Tests

1.02 RELATED SECTIONS

A. Testing and approvals required by public authorities.

B. Section 01300 – Submittals – Manufacturer's Certificates.

C. Section 01701 – Contract Closeout – Project Record Documents.

1.03 REFERENCES

A. ASTM C 802-87 – Practice for Conducting an Interlaboratory Test Program to Determine the Precision of Test Methods for Construction.

B. ASTM C 1077-92 – Practice for Laboratories Testing Concrete and Concrete Aggregates for Use in Construction and Criteria for Laboratory Evaluation.

C. ASTM C 1093-88 – Practice for Accreditation of Testing Agencies for Unit Masonry.

D. ASTM D 290-85 – recommended Practice for Bituminous Mixing Plant Inspection.

E. ASTM D 3740-92 – Practice for Evaluation of Agencies Engaged in Testing and/or Inspection of Soil and Rock as Used in Engineering Design and Construction.

F. ASTM D 4561-86 – Practice for Quality Control Systems for an Inspection and Testing

Agency for Bituminous Paving Materials.

G. ASTM E 329-93 – Practice for Use in the Evaluation of Inspection and Testing Agencies as Used in Construction.

H. ASTM E 543-93 – Practice for Determining the Qualification of Nondestructive Testing Agencies.

I. ASTM E 548-93 – Practice for Preparation of Criteria for Use in the Evaluation of Testing Laboratories and Inspection Bodies.

J. ASTM E 699-79 (Reapproved 19910 – Practice for Criteria for Evaluation of Agencies Involved in Testing, Quality Assurance, and Evaluating Building Components in Accordance with Test Methods Promulgated by ASTM Committee E6.

1.04 SELECTION AND PAYMENT

A. Contractor shall select, and Owner shall approve, a Testing Firm for Contractor to use and employ.

B. Contractor shall be responsible for contracting the services of the approved independent testing agency or laboratory to perform specified testing. **All coordination of testing and payment for services shall be the responsibility of the Contractor. Unless otherwise specifically noted, payment for testing shall be included in the Bid Form Item to which it pertains.**

C. Employment of testing agency or laboratory in no way relieves Contractor of obligation to perform work in accordance with requirements of Contract Documents.

1.05 QUALITY ASSURANCE

A. Comply with requirements of practices listed in paragraph 1.03.

B. Laboratory – Authorized to operate in State in which Project is located.

C. Laboratory Staff – Maintain a full-time registered Engineer on staff to review services.

D. Testing Equipment – Calibrated at reasonable intervals with devices of accuracy traceable to either National Bureau of Standards or accepted values of natural physical constants.

1.06 CONTRACTOR SUBMITTALS

A. Prior to start of Work, submit list of preferred testing laboratory name, address, and telephone number, and names of full-time registered Engineer and responsible officer. Owner may select a firm from list or may request different firm for use in testing.

B. Submit copy of report of laboratory facilities inspection made by Materials Reference Laboratory of National Bureau of Standards during most recent inspection, with memorandum of remedies of any deficiencies reported by the inspection.

1.07 TESTING AGENCY RESPONSIBILITIES

A. Test samples of mixes submitted by Contractor.

B. Provide qualified personnel at site. Cooperate with Engineer and Contractor in performance of services.

C. Perform specified sampling and testing of Products in accordance with specified standards.

D. Ascertain compliance of materials and mixes with requirements of Contract Documents.

E. Promptly notify Engineer and Contractor of observed irregularities or non-conformance of Work or Products.

F. Perform additional tests required by Engineer.

G. Attend Preconstruction meetings and progress meetings.

1.08 TESTING AGENCY REPORTS

A. After each test, promptly submit three (3) copies of report to Engineer and to Contractor.

B. Include:

1. Date issued

2. Project title and number

3. Name of inspector

4. Date and time of sampling or inspection
5. Identification of product and specifications section
6. Location in the Project
7. Type of inspection or test
8. Date of test
9. Results of tests
10. Conformance with Contract Documents

C. When requested by Engineer, provide interpretation of test results.

1.09 LIMITS ON TESTING AUTHORITY

A. Agency or laboratory may not release, revoke, alter, or enlarge on requirements of Contract Documents.

B. Agency or laboratory may not approve or accept any portion of the Work.

C. Agency or laboratory may not assume any duties of Contractor.

D. Agency or laboratory has no authority to stop the Work.

1.10 CONTRACTOR RESPONSIBILITIES

A. Deliver to agency or laboratory at designated location, adequate samples of materials proposed to be used which require testing, along with proposed mix designs.

B. Cooperate with laboratory personnel and provide access to the Work.

C. Provide incidental labor and facilities –

1. To provide access to work to be tested
2. To obtain and handle samples at the site or at source of Products to be tested
3. To facilitate tests
4. To provide storage and curing of test samples

D. Notify Engineer and laboratory 48 hours prior to expected time for operations requiring testing services.

E. Employ services of an independent qualified testing laboratory.

1.11 SCHEDULE OF TESTS

Section	Test *	Frequency *	Date	Performed By	Notes
02200 – Earthwork, Site Grading, & Subgrade Preparation					
Compaction					
	Unpaved & Landscaped with no traffic	1 test per horizontal layer per 10,000 SF of fill area			
	Paved & Pond Levee	1 test per horizontal layer per 5,000 SF of area			
	Building Pad	1 test per horizontal layer per 1,500 SF of fill area. **Minimum of two tests.**			
	Curb & Gutter	1 test per 300 LF			
Import Fill Material Pre-Construction Lab Testing					
	Atterberg Limits	1 Per project			
	Grain Size Analysis/Soil Classification	1 Per project			
	Standard Proctor Density	1 Per project			
	Moisture Content	1 Per project			
	Specific Gravity	1 Per project			
Subgrade					
	Proofrolling	1 Per Layer			
11200 – Water Distribution System					
	Hydrostatic & Leakage	1.5 times the working pressure (no less than 150 psi). Conducted for 2 hours with maintained pressure of 150 psi (200 psi on fire main)			
	Bacteriological Samples	2 taken 24 hours apart after disinfection			
Compaction					
	Traffic Areas	1 per 100 LF or less for each 4 VF of depth			
	Non-Traffic Areas	1 per 500 LF or less for each 4 VF of depth			
Fire Flow		1 per permit			
02530 – Wastewater Collection System					
Start-up		Prior to acceptance of Pump Station			
Drawdown		Prior to acceptance of Pump Station			
Certification		Completion			
Warranty		Completion			
Television Inspection of Sewers		All gravity sewer lines			
Leakage		As necessary			
Compaction					
	Traffic Areas	1 per 100 LF or less for each 4 VF of depth			
	Non-Traffic Areas	1 per 500 LF or less for each 6 VF of depth			
Gravity – Air		[All lines]			

Section	Test *	Frequency *	Date	Performed By	Notes
Gravity - Vacuum		All manholes			
Hydrostatic – Force Main		150 psi for 2 hours			
Deflection		[All lines]			
02310 – Storm Drainage					
Compaction					
	Traffic Areas	1 per 100 LF or less for each 4 VF of depth			
	Non-Traffic Areas	1 per 500 LF or less for each 6 VF of depth			
02720 – Aggregate Base Course (GAB)					
	Base Density	1 test per 5,000 SF			
	Proofroll	1 test per layer of GAB			
02740 – Asphaltic Concrete Base Course					
	Asphalt Extraction & Gradation	1 test per each 250 tons placed			
	Marshall Stability	1 test per each 500 tons placed			
	Core	1 test for each 500 tons placed			
	Field Density	1 test per each 500 tons placed			
02740 – Asphaltic Concrete Binder/Surface Courses					
	Asphalt Extraction & Gradation	No less than 1 test for 500 tons placed; minimum one per road/street.			
	Marshall Stability	Not required			
	Core	No less than 1 test for 500 tons placed; minimum one per road/street.			
	Field Density (nuclear gauge) & Percent Air Voids	No less than 1 test for 500 tons placed; minimum one per road/street.			
02750 – Portland Cement Concrete Paving					
	Mix Designs	1 per mix design			
	Compressive Strength	3 test cylinders for every 30 cubic yards or less of each mix design placed daily			
		1 cylinder broken at 7 days			
		2 cylinders broken at 28 days			
	Slump	1 test for each set of cylinders taken			
03300 – Cast-in-Place Concrete					
	Materials	As necessary			
	Mix Designs	1 per mix design			
	Strength	5 test cylinders for each 50 cy or less of each mix design placed daily (min. of 5 cylinders for each days pour of less than 50 cy)			
		1 cylinder tested at 7 days			
		1 cylinder tested at 14 days			
		2 cylinders tested at 28 days			
		1 cylinder tested at 56 days			
	Slump	1 test per each set of cylinders			
	Air Content	1 test per each set of cylinders			
	Temperature	1 test per each set of cylinders			

** Unless specified otherwise in individual Sections.*

PART 2 – PRODUCTS – Not Used

PART 3 – EXECUTION

3.1.1 Payment

Payment for all testing shall be the responsibility of the Contractor.

END OF SECTION

SECTION 01516
TEMPORARY SANITARY FACILITIES

PART 1 GENERAL

1.01 SCOPE

A. This section is intended to include requirements for temporary sanitary facilities provided by Contractor, including provisions for Contractor's use of existing and permanent facilities.

1.02 REQUIREMENTS INCLUDED

A. Temporary Sanitary Facilities

B. Maintenance and Service

C. Removal

D. Cleaning

1.03 USE OF EXISTING FACILITIES

A. Use of the Owner's existing or new facilities is prohibited. The Contractor will be required to provide their own portable facilities.

1.04 USE OF PORTABLE FACILITIES

A. Contractor shall provide portable sanitary facilities at such places as approved by the Owner.

B. Contractor shall pay all costs for installation, maintenance, and removal of temporary sanitary facilities.

PART 2 PRODUCTS

2.01 MATERIALS

A. Materials may be new or used, adequate to the purpose, which will not create unsanitary conditions.

2.02 TOILET FACILITIES

A. Enclosed portable self-contained units or temporary water closets and urinals,

secluded from public view.

PART 3 EXECUTION

3.01 INSTALLATION

A. Provide facilities at time of site mobilization.

B. Modify and extend service as work progresses.

3.02 MAINTENANCE AND SERVICE

A. Clean areas of facilities weekly and maintain in a sanitary condition.

B. Provide toilet paper, paper towels, and soap in suitable dispensers.

3.03 REMOVAL

A. Remove portable units when other facilities are available or prior to Substantial Completion.

END OF SECTION

SECTION 01701
CONTRACT CLOSEOUT PROCEDURES

PART 1 – GENERAL

1.01 REQUIREMENTS INCLUDED

A. Administrative provisions for Substantial Completion and for final acceptance.

1.02 RELATED REQUIREMENTS

A. Section 01300 – Submittal

1.03 SUBSTANTIAL COMPLETION

A. When the Contractor considers the work substantially complete, he shall prepare a punch list of uncompleted items and send to the Engineer for review. At the same time, the Contractor shall request in writing that the Engineer schedules a pre-final inspection.

B. The Engineer will review the punch list submitted by the Contractor and determine if the project is substantially complete.

C. If the Engineer determines that the project is not substantially complete, he will notify the Contractor in writing which items need to be finished before the project can be considered substantially complete. The Contractor shall continue working to complete all punch list items and resubmit a revised punch list when he considers the work is substantially complete.

D. When the Engineer determines that the work is substantially complete, he will schedule a pre-final inspection with the Owner, Contractor and Engineer. A final punch list will be prepared at this time.

E. After all punch list items have been completed, the Contractor shall send a request in writing to the Engineer to schedule a final inspection. When all punch list items are complete, the Engineer will issue a certificate of substantial completion.

1.04 FINAL COMPLETION

A. When the Contractor considers that all of the work is complete, he shall submit the following certificates:

1. All work has been completed and inspected for compliance with the Contract Documents and all deficiencies listed with the certificate of

substantial completion have been corrected.

2. All equipment and systems have been tested, adjusted and are fully operational.

3. Owner's personnel have been fully instructed in the operation of all equipment (include sign off for each system).

4. Work is complete and ready for final inspection.

B. Should Engineer's inspection find work incomplete, he will promptly notify Contractor in writing listing observed deficiencies.

C. Contractor shall remedy deficiencies and send a request for another final inspection.

D. When Engineer finds work is complete, he will process final pay request documents.

1.05 REINSPECTION FEES

A. Should status of completion of work require reinspection by Engineer due to failure of work to comply with Contractor's claims on pre-final or final inspection, the Owner will back charge the Contractor for each extra reinspection required of the Engineer. The Contractor shall reimburse the Owner by certified check prior to final payment of retainage.

1.06 CLOSEOUT SUBMITTALS

A. Evidence of Compliance with Requirements of Governing Authorities –

1. Certificate of Occupancy as required by local codes.

2. Certificates of Inspection approvals required for plumbing, mechanical and electrical systems as required by local codes if applicable.

B. Project Record Documents – Under provisions of Section 01720.

C. Operation and Maintenance Data – Under provisions of Section 01730.

D. Warranties and Bonds – Under provisions of Section 01740.

E. Keys and Keying Schedule.

F. Evidence of Payment and Release of Liens – In accordance with Conditions of the Contract.

G. Consent of Surety to Final Payment – Consent of Surety is to be sent by Surety directly to Carter and Sloope to the attention of the Project Engineer.

1.07 APPLICATION FOR FINAL PAYMENT

A. Prior to application for final payment, the Contractor shall give the Engineer a list of all additions or deletions not previously approved by change order.

B. The Engineer will review this list and prepare a final closeout change order for the items that are justified by the terms of the contract or approved by field order.

C. After approval of the final closeout change order the Contractor may submit his application for final payment.

PART 2 – PRODUCTS: Not Used.

PART 3 – EXECUTION: Not Used.

END OF SECTION

SECTION 01710
PERIODIC AND FINAL CLEAN-UP

PART 1 – GENERAL

1.01 REQUIREMENTS INCLUDED

A. Final clean-up of site, roadway and buildings.

1.02 DESCRIPTION

A. Execute clean-up prior to inspection for Substantial Completion of the Work.

1.03 DISPOSAL REQUIREMENTS

A. Remove and dispose of waste materials, rubbish, debris and trash in compliance with provisions of governing laws, codes, ordinances and regulations.

1. Do not burn or bury rubbish, trash, debris and waste materials on Project site.

PART 2 – PRODUCTS

2.01 CLEANING MATERIALS

A. Use materials which will not create hazards to health or property, and which will not damage surfaces.

B. Use only materials and methods recommended by manufacturer of material being cleaned.

PART 3 – EXECUTION

3.01 PERIODIC CLEANING

A. On a regular and frequent basis during progress of work, perform cleaning necessary to keep Project site and adjacent properties free from unsightly and unsafe accumulation of scrap and waste materials, debris, rubbish and trash resulting from construction operations.

1. Provide sufficient trash bins and containers for collection of scrap and

waste material, debris, rubbish and trash.

2. Provide separate, closeable top metal containers for collection of oil and paint soaked rags; empty volatile substance cans and other waste products subject to spontaneous combustion.

3. Designate approved eating areas and provide covered containers conforming to local health codes for collection of waste paper and leftover foodstuffs. Enforce usage of containers by workmen.

B. Dispose of scrap and waste materials, debris, rubbish and trash by one of the following optional methods –

1. Provide services of company regularly engaged in refuse disposal operations, including usage of large metal dump-type trash containers.

2. Use own forces and equipment for loading, hauling and disposal.

C. Remove accumulations of scrap and waste materials as bins and containers are filled and not less than once per week.

1. Remove containers containing products subject to spontaneous combustion daily.

2. Remove containers containing waste paper and leftover foodstuff daily.

3. Legally dispose of all waste materials, rubbish, volatile materials and cleaning materials off Project site.

4. Dispose of no materials in waterways.

3.02 DUST CONTROL

A. Site Work – When working on unpaved or disturbed paved streets, Contractor shall maintain a water truck on site for dust control. All dusty work sites in residential areas shall be watered at least twice per day and whenever directed by the Owner's representative.

B. Buildings – During application of finished surface materials, including painting and decorating, employ dust control methods during cleaning operations to prevent dust from contaminating wet and freshly coated surfaces.

3.03 FINAL CLEANING

A. Site Work

1. All piles of dirt and rocks are to be removed from the work areas.

2. All disturbed areas are to be grassed and mulched according to these specifications.

3. All construction debris is to be removed to an approved disposal site.

4. All streets are to be swept with a mechanical sweeper.

B. Buildings

NOTE USED

3.04 INSPECTION

A. Prior to occupancy by Owner of any designated portion of Work, conduct inspection in presence of Owner to verify work is properly clean and ready for acceptance by Owner.

END OF SECTION

SECTION 01740
WARRANTIES AND BONDS

PART 1 - GENERAL

1.01 PROJECT MAINTENANCE AND WARRANTY

A. Maintain and keep in good repair the Work covered by these Drawings and Specifications until acceptance by the Owner.

B. The Contractor shall warrant for a period of one year from the date of Owner's written final acceptance of the Project, that the completed Work is free from all defects due to faulty products or workmanship and the Contractor shall promptly make such corrections as may be necessary by reason of such defects. The Owner will give notice of observed defects with reasonable promptness. In the event that the Contractor should fail to make such repairs, adjustments or other work that may be made necessary by such defects, the Owner may do so and charge the Contractor the cost thereby incurred. The Performance Bond shall remain in full force and effect throughout the warranty period.

C. The Contractor shall not be obligated to make replacements which become necessary because of ordinary wear and tear, or as a result of improper operation or maintenance, or as a result of improper work or damage by another Contractor or the Owner, or to perform any work which is normally performed by a maintenance crew during operation.

D. In the event of multiple failures of major consequences prior to the expiration of the one year warranty described above, the affected unit shall be disassembled, inspected and modified or replaced as necessary to prevent further occurrences. All related components which may have been damaged or rendered non-serviceable as a consequence of the failure shall be replaced. A new 12 month warranty against defective or deficient design, workmanship, and materials shall commence on the day that the item is reassembled and placed back into operation. As used herein, multiple failure shall be interpreted to mean two or more successive failures of the same kind in the same item or failures of the same kind in two or more items. Major failures may include, but are not limited to, cracked or broken housings, piping, or vessels, excessive deflections, bent or broken shafts, broken or chipped gear teeth, premature bearing failure, excessive wear or excessive leakage around seals. Failures which are directly and clearly traceable to operator abuse, such as operations in conflict with published operating procedures or improper maintenance, such as substitution of unauthorized replacement parts, use of incorrect lubricants or chemicals, flagrant over-or under-lubrication and using maintenance procedures not conforming with published maintenance instructions, shall be exempted from the scope of the one year warranty.

Should multiple failures occur in a given item, all products of the same size and type shall be disassembled, inspected, modified or replaced as necessary and rewarranted for one year.

E. The Contractor shall, at Contractor's own expense, furnish all labor, materials, tools and equipment required and shall make such repairs and removals and shall perform such work or reconstruction as may be made necessary by any structural or functional defect or failure resulting from neglect, faulty workmanship or faulty materials, in any part of the Work performed by the Contractor. Such repair shall also include refilling of trenches, excavations or embankments which show settlement or erosion after backfilling or placement.

F. Except as noted on the Drawings or as specified, all structures such as embankments and fences shall be returned to their original condition prior to the completion of the Contract. Any and all damage to any facility not designated for removal, resulting from the Contractor's operations, shall be promptly repaired by the Contractor at no cost to the Owner.

G. The Contractor shall be responsible for all road and entrance reconstruction and repairs and maintenance of same for a period of one year from the date of final acceptance. In the event the repairs and maintenance are not made immediately and it becomes necessary for the owner of the road to make such repairs, the Contractor shall reimburse the owner of the road for the cost of such repairs.

H. In the event the Contractor fails to proceed to remedy the defects upon notification within 15 days of the date of such notice, the Owner reserves the right to cause the required materials to be procured and the work to be done, as described in the Drawings and Specifications, and to hold the Contractor and the sureties on Contractor's bond liable for the cost and expense thereof.

I. Notice to Contractor for repairs and reconstruction will be made in the form of a registered letter addressed to the Contractor at Contractor's home office.

J. Neither the foregoing paragraphs nor any provision in the Contract Documents, nor any special guarantee time limit implies any limitation of the Contractor's liability within the law of the place of construction.

END OF SECTION

SECTION 02200

EARTHWORK & SITE GRADING

PART 1 - GENERAL

1.01 SCOPE

Work under this section shall include:

A. Earthwork/Site Grading:

The extent of earthwork is shown on the drawings, and includes preparation of subgrades for sidewalks, pavement subgrades, general cut/fill grading, and placement of topsoil.

1. Grade sub-soil and form to grades, contours and levels.
2. Rough grade for sidewalks.
3. Provide dust and erosion control.

1.02 RELATED WORK

A. Section 02220 – Demolition

B. Section 02315 – Excavation, Trenching, & Backfill for Utility Systems

C. Section 02370 – Soil Erosion Control

D. Section 02920 – Permanent (Perennial) Grassing & Landscaping

1.03 QUALITY ASSURANCE

A. Regulatory Requirements: Comply with applicable requirements of federal, state, and local laws, regulations and codes having jurisdiction at projectsite.

The Contractor shall secure all necessary permits and pay all applicable fees prior to commencing the work in thissection.

B. The Contractor shall comply with all pertinent provisions of the Manual of Accident Prevention in Construction issued by the Association of Contractors of America, Inc., and the Safety and Health Regulations of Construction issued by the U.S. Dept. of Labor. Refer also to Section, Special Conditions.

C. Soil tests, field density tests, and testing of footing subgrades and observation and reports of proof-rolling shall be made by a materials testing

laboratory/Geotechnical Engineer approved by the Owner and paid for by theContractor.

1.04 REFEERENCES

A. American Society for Testing and Materials (ASTM):

ASTM D1557 – Test Methods for Moisture – Density Relations of Soils and Soil-Aggregate Mixtures Using 10 lb. (4.54 kg) Rammer and 18" (45 7mm) Drop.

ASTM D698 – Test Methods for Moisture-Density Relations of Soils and Soil Aggregate Mixtures Using 5.5 lb. (2.49 kg) Rammer and 12"(304.8mm) Drop.

B. American Association of State Highway and Transportation Officials (AASHTO):

M145 – The Classification of Soils and Soil-Aggregate Mixtures for Highway Construction Purposes.

1.05 JOB CONDITIONS

A. Verify existing site conditions prior to commencing operations. Locate all existing site utilities.

1. Examine areas for conditions under which work is to be performed. Report in writing to Engineer all conditions contrary to those shown on the drawings or specified herein and all other conditions that will affect satisfactory execution of work such as improperly constructed substrates or adjoining work. Do not proceed with work until unsatisfactory conditions have been corrected.
2. Prior to starting construction, the General Contractor shall be responsible for verifying that all required permits and approvals have been obtained. No construction or fabrication of any item shall begin until the Contractor has received all plans and any other documentation from all the permitting agencies and other regulatoryauthorities.
3. Starting work constitutes acceptance of the conditions under which work is to be performed. After such acceptance the Contractor shall, at his expense, be responsible for correcting all unsatisfactory and defective work resulting from such unsatisfactory conditions.

B. Location and Protection of Utilities andStructures:

1. It shall be the responsibility of the contractor to acquaint himself with the location of all utilities and structures both present and proposed, also all existing surface structures which may be affected by work under the

Contract. The location of any underground structures furnished, shown on the drawings, or given on the site are based upon the available records but are not guaranteed to be complete or correct, and are given only to assist the Contractor in making a determination of the existence of underground structures.

2. Overhead utilities, poles, etc., shall be protected against damage by the Contractor, and if damaged by the Contractor, shall be replaced by him. The Contractor shall notify those who maintain utilities sufficiently in advance of the proposed construction so that they may locate, uncover, and disclose such work. If the progress of construction necessitates the removal or relocation of poles, overhead utilities, and obstructions, the Contractor shall make all arrangements and assume all costs of the work.

3. The Contractor shall provide for the continuance of the flow of any sewers, drains, water pipes, water courses, etc. Where such facilities, water courses, or electric overhead wires or conduits are interfered with by the work of the Contractor, the interruption shall be a minimum and shall be scheduled in advance with the utility owner.

4. Should uncharted or incorrectly charted piping or other utilities be encountered during excavation, consult utility owner immediately for directions. Cooperate with Owner and utility companies in keeping respective services and facilities in operation. Repair damaged utilities to satisfaction of utility owner.

5. Do not interrupt existing utilities serving facilities occupied and used by Owner or others, except when permitted in writing by the Utility Owner and then only after acceptable temporary utility services have been provided.

6. The Contractor shall restore all facilities interfered with to the original condition or acceptable alternate approved by the Utility Owner. The cost of such restoration of services shall be the responsibility of the Contractor.

C. Protection of Persons and Property: Barricade open excavations occurring as part of this work, post with warning lights, and take other safety precautions as necessary.

1. Operate warning lights as recommended by authorities having jurisdiction.

2. Protect structures, utilities, sidewalks, pavements, and other facilities from damage caused by settlement, lateral movement, undermining, washout and other hazards created by earthwork operations.

3. Contractor is responsible for any damage caused by his work on this project, including damage caused by his subcontractors.

4. The Contractor shall install and maintain for the duration of the project all necessary barricades and traffic control devices for the protection and safety of the public.

5. Install temporary barriers, fences, guard rails, enclosures, shoring, bracing, planking, barricades, lights, warning signs and other protections required to protect structures, utilities, landscaping, and other items that are to remain in place.

6. Protect trees, shrubs and lawns, and other features remaining as part of final landscaping.

7. Protect benchmarks and existing structure, fences, roads, underground utilities, and paving against damage from equipment and vehicular traffic.

D. Nuisances: Keep dirt, dust, noise, and other objectionable nuisances to a minimum. Use temporary enclosures, coverings and sprinkling, or combinations thereof, as necessary to limit dust to lowest practicable level, except do not use water to the extent that it causes flooding, contaminated runoff, or icing.

E. Traffic: Conduct work to ensure minimum interference with streets, driveways, sidewalks, and access to operations of on-site facilities.

1. Do not close or obstruct streets, sidewalks, drives or other public passageways without permission.

F. Erosion Control: As detailed on the drawings and as specified in Section 02370.

1. Maintain erosion and dust control throughout the duration of the contract.

PART 2 – PRODUCTS

2.01 SATISFACTORY SOIL MATERIALS

A. Contractor shall be responsible for all testing, including testing of borrow materials to determine suitability for use as fill materials.

1. **Import/Borrow Fill Materials:** Satisfactory soil materials shall be free of clay, rock, or gravel larger than 2" in any dimension, debris, waste, frozen

materials, vegetable, and other deleterious matter. Backfill and Fill Materials shall have a liquid limit less than 50%, plastic index less than 30, and a standard proctor maximum dry density (ASTM D698) greater than 90 pcf. Soils classified as SC, SP, SM, ML, or CL according to the Unified Soil Classification System are considered suitable provided they meet the above criteria. Fill materials shall be moisture-conditioned to slightly above the optimum moisture content, spread in thin lifts (8 inches), and methodically compacted to 98% of the standard proctor max dry density (ASTM D698).

B. **Topsoil** shall be considered to mean original surface soil, typical of area, which is capable of supporting native plant growth, and shall be free of large stones, roots, brush, waste construction debris, and other undesirable material or contamination.

PART 3 – EXECUTION

3.01 EARTHWORK/SITE GRADING

A. Topsoil shall be undercut to expose bearing soil level.

B. Contractor shall be responsible for hauling and removal of existing unsuitable materials.

C. Excavation: Consists of removal and disposal of material encountered when establishing required sub-grade elevations and invert elevations forutility trenches.

1. Earthwork excavation includes removal and disposal of material of any classification and other materials encountered that are not classified as unauthorized excavation or rock excavation.

2. Unauthorized excavation consists of removal of material beyond indicated subgrade elevations or dimensions without specific direction of the Engineer. Unauthorized excavation, as well as remedial work directed by the Engineer, shall be at Contractor's expense.

3. Rock excavation includes removal and disposal of materials classified as rock that are encountered when establishing required finish grades, subgrades elevations or invert elevations. Removal of materials classified as rock excavation, if encountered, will be paid for on basis of contract conditions relative to changes in work.

4. Elsewhere, backfill and compact unauthorized excavations as specified for

authorized excavations of same classification, unless otherwise directed by the Engineer.

D. Additional Excavation:

1. If unsuitable bearing materials are encountered at required subgrade elevations, contractor shall immediately notify the Engineer. Carry excavations deeper and replace excavated material as directed by the Engineer.

2. Removal of unsuitable material and its replacement as directed will be paid on basis of contract conditions relative to changes in work.

E. Stability of Excavations: Slope sides of excavations shall comply with applicable codes and ordinances having jurisdiction. Shore and brace where sloping is not possible because of space restrictions or stability of material excavated.

1. Maintain sides and slopes of excavations in safe condition until completion of backfilling.

F. Shoring and Bracing: Provide materials for shoring and bracing, such as sheet piling, uprights, stringers, and cross-braces, in good, serviceable condition.

1. Establish requirements for trench shoring and bracing to comply with applicable codes and authorities having jurisdiction.

2. Maintain shoring and bracing in excavations regardless of time period excavations will be open. Carry down shoring and bracing as excavation progresses.

G. Dewatering: Dewatering is the responsibility of the contractor. Prevent surface water and subsurface or groundwater from flowing into excavations and from flooding project site and surrounding area.

1. Do not allow water to accumulate in excavations. Remove water to prevent softening of foundation bottoms, undercutting footings, and soil changes detrimental to stability of subgrades and foundations. Provide and maintain pumps, well points, sumps, suction and discharge lines, and other dewatering system components necessary to convey water away from excavations.

2. Convey water removed from excavations and rainwater to collecting or

run-off areas. Establish and maintain temporary drainage ditches and other diversions outside excavation limits for each structure. Do not use trench excavations as temporary drainage ditches. Do not permit construction drainage onto adjacent property.

H. Material Storage: Stockpile satisfactory excavated materials where directed, for backfill or fill. Place, grade, and shape stockpiles for proper drainage. Soil stockpiles shall be surrounded with a single row of silt fence.

1. Locate and retain soil materials away from edge of excavations.

2. Dispose of excess soil material and waste materials as herein specified.

I. Excavation for Structures and Pavements: Conform to elevations and dimensions shown within a tolerance of plus or minus 0.10' and extending 10 feet from foundations to permit placing and removal of concrete formwork, installation of services, other construction, and for inspection.

1. Contractor shall grade the buildings' subgrades to allow for the required concrete slabs. Depth of subgrade below finished contours and elevations shall be as indicated in the Architectural Drawings. Refer to drawings for concrete paving subgrade depths.

J. Proof-rolling:

1. At completion of clearing, grubbing, and stripping of topsoil, stump holes or other depressions shall be cleared of loose material and debris and shall then be backfilled with approved fill as necessary to achieve specified subgrades.

2. Each building pad and all pavement subgrade areas shall be compacted and proof-rolled. All areas that are unstable under the proof-rolling equipment shall be undercut to firm soil and replaced with clean fill compacted as specified in eight-inch loose lifts. Proof-roll shall be observed by the Engineer. Contractor shall provide a report of all proof-rolling to the Engineer and Owner. Proof-rolling shall be accomplished with a fully loaded dump truck (20-ton min.) or other rubber-tired equipment. Overlapping passes of the vehicle shall be made across the site in one direction, and then at right angles to the original direction.

K. Compaction:

1. Control soil compaction during construction providing the percentage of

density specified for each area classification.

2. Compact soil to no less than the following percentages of maximum dry density for soils which exhibit a well-defined moisture density relationship determined in accordance with ASTM standards; and not less than the following percentages of relative density, determined in accordance with ASTM D 2049, for soils which will not exhibit a well-defined moisture-density relationship.

   a. Building Pads and Paved Areas: Import/borrow fill should be moisture-conditioned to slightly above the optimum moisture content, spread in relatively thin lifts (6-inch maximum loose lifts) and methodically compacted with heavy compaction equipment to at least 98 percent of the standard Proctor maximum dry density (ASTM D698). The upper one-foot of fill material should be compacted to a 99-percent compaction criterion. Additionally, the upper one foot of material in areas at-grade or cut surfaces should be scarified and compacted to the 99 percent criteria. Specifically, moisture levels should be maintained low enough to allow for satisfactory compaction to be achieved without pumping when proof-rolled. Structural fill criteria should be utilized beneath proposed and future structural areas.

   b. Unpaved Areas: Fill should be moisture-conditioned to slightly above the optimum moisture content, spread in relatively thin lifts (6-inch maximum loose lifts) and methodically compacted with heavy compaction equipment to at least 95 percent of the standard Proctor maximum dry density (ASTM D698). The upper one foot of fill material should be compacted to a 98 percent compaction criterion. Additionally, the upper one foot of material in areas at-grade or cut surfaces should be scarified and compacted to the 98 percent criteria. Specifically, moisture levels should be maintained low enough to allow for satisfactory compaction to be achieved without pumping when proof-rolled.

L. Backfill and Fill:

1. General: Place acceptable soil material in layers to required subgrade elevations, for each area classification listed below.

   a. In excavations, use satisfactory excavated or borrow material.

   b. Under grassed areas, use satisfactory excavated or borrow material.
   Under walks and pavements, use subbase material, or satisfactory excavated or borrow material, or combination of both.

2. Backfill excavations as promptly as work permits, but not until completion of the following:

   a. Removal of concrete formwork

   b. Removal of shoring and bracing, and backfilling of voids with satisfactory materials.

   c. Removal of trash and debris.

M. Ground Surface Preparation: Remove vegetation, debris, unsatisfactory soil materials, obstructions, and deleterious materials from ground surface prior to placement of fills. Plow, strip, or break-up sloped surfaces steeper than 1 vertical to 4 horizontal so that fill material will bond with existing surface.

1. When existing ground surface has a density less than the specified compaction for particular area classifications, break up ground surface, pulverize, moisture-condition to optimum moisture content, and compact to required depth and percentage of maximum density.

N. Placement and Compaction: Place backfill and materials in layers not more than 6" in loose depth for material compacted by heavy compaction equipment and not more than 4" in loose depth for material compacted by hand operated tampers.

   a. Before compaction, moisten or aerate each layer as necessary to provide optimum moisture content. Compact each layer to the required percentage of maximum dry density or relative dry density for each area classification. Do not place backfill or fill material on surfaces that are muddy, frozen, or contain frost or ice.

   b. Place backfill and fill materials adjacent to structures evenly, to the required elevations. Take care to prevent wedging action of backfill against structures by carrying material uniformly around structure to approximately same elevation in each lift.

O. Grading:

1. Uniformly grade areas within limits of grading under this section, including adjacent transition areas. Smooth finished surface within specified tolerances, compact with uniform levels or slopes between points where elevations are shown, or between such points and existing grades. Grade areas adjacent to pavement to slope as indicated on the drawings and to prevent ponding of water in paved areas. Backfill against curbs and

pavement edges flush to provide a smooth finish in areas to be grassed.

a. Establish and identify required lines, levels, contours, and datum.

b. Maintain benchmarks, monuments, and other reference points. Re-establish if disturbed or destroyed, at no cost to the Owner.

c. Before start of grading, notify all pertinent utility companies 48 hours prior to digging for location of underground utility lines. Establish the location and extent of utilities in the work areas.

d. Perform grading within contract limits, including adjacent transition areas to new elevations, levels, profiles, and contours indicated. Provide subgrade surfaces parallel to finished surface grades. Provide uniform levels and slopes between new elevations and existing grades.

e. Grade surfaces to assure areas drain away from structures and to prevent ponding and pockets of surface drainage. Provide subgrade surfaces free from irregular surface changes.

f. Perform grading within branch spread of existing trees to remain by hand methods to elevations indicated. Cut roots, if necessary, with an axe, and coat cut roots with tree paint.

g. Grade at excavations to prevent stormwater from draining into excavated areas.

2. Rough Grading:

a. Sodded areas - 4" min. below finished grade elevations.

b. Paved areas – To below base material.

c. Shrub beds - 4" min. below finished grade elevations.

d. Concrete sidewalks - 8" min. below finished grade elevations.

3. Prior to placing fill material over undisturbed subsoil, scarify the surface.

4. Proof-roll the underlying natural sub-grade layer beneath paved areas plus 5' beyond with a minimum of ten (10) passes of a heavy vibratory roller.

5. Dewatering may be required for some excavations. Dewatering shall be designed and operated to lower the ground water table to a depth of approximately 2' below the bottom of compaction surfaces. Dewatering discharges shall be directed to temporary sediment traps.

6. Grading Outside Building Lines: Grade areas adjacent to building lines to drain away from structures and to prevent ponding. Grade as per details on the Drawings.

   a. Finish surfaces free from irregular surface changes, and as follows:

      i. Lawn Areas: Finish areas to receive topsoil to within not more than 0.10' above or below required elevations. Areas shall be free of stones, pebbles, etc., 3/4" and larger. Finish grading of lawns and other areas to be grassed shall be fine graded using hand rakes and small rubber-tired tractors with box blades. Fine graded areas shall be pulverized with a Gill Pulverizer or equal equipment.

      ii. Pavements: Shape surface of areas under pavement to line, grade and cross-section, with finish surface not more than 1/2" above or below required subgrade elevation.

   b. Grading Surface of Fill Under Building Slabs: Grade smooth and even, free of voids, compacted as specified, and to required elevation. Provide final grades within a tolerance of 1/2" when tested with a 10' straightedge. Extend fill beyond perimeter of footings a minimum of 5 feet.

   c. Compaction: After grading, compact subgrade surfaces to the depth and percentage of maximum density for each areaclassification.

P. Field Quality Control:

1. It is the Contractor's responsibility to provide pre-construction laboratory testing to ensure import fill material meets the earthwork specifications. Collection of samples and delivery of samples to be the responsibility of the contractor. Testing to include at a minimum:

a. Atterberg Limits (ASTM D4318)
b. Grain Size Analysis/Soil Classification
    1) ASTM D422 / D6913 – Sieve analysis for coarse and fine aggregates
    2) ASTM D1140 – Determination of fines
c. Standard Proctor Density
    Establish the maximum dry density (MDD) and optimum moisture content (OMC) for field compaction control.
    1) ASTM D698 – Standard Proctor
    2) ASTM D1557 – Modified Proctor
d. Moisture Content (ASTM D2216)
e. Specific Gravity (ASTM D854 for fines or C127/C128 for coarse/fine aggregates)

2. In-field density to be determined via Nuclear Gauge Density test (ASTM D6938). Moisture content to be within 2% of optimum.
3. Provide proof-rolling of subgrade and GAB layers under the supervision of a licensed geotechnical engineer. Undercut pumping areas under and replace at the contractor's expense.
4. Allow Engineer to inspect and approve subgrades and fill layers before further construction work is performed. The Engineer shall observe the proof-rolling of the building pads, slab subgrade areas, and pavement areas. Submit one copy of results for all Compaction Tests and observations of proof-rolling to the Owner and Engineer.

    a. Perform field density tests in accordance with ASTM D 2937 (drive cylinder method), ASTM D 2167 (rubber balloon method), as applicable, or nuclear method ASTM D 2922.

    b. Subgrade Areas: Make at least one field density test for each horizontal layer of subgrade for every 5,000 sq. ft. of pavement subgrade area.

    c. Footings Subgrades: All footing subgrades shall be examined by the Geotechnical Engineer immediately prior to placement of reinforcing steel. Auger and penetrometer testing, augmented by hand probing, shall be performed on all footings in accordance with the following:

5. Auger and penetrometer testing: One test for each 25 linear feet of footing subgrade.

6. Probe rod testing: One test for each spread footing and one test for each 10 linear feet of continuous footing.

7. Unpaved Areas: Make at least one field density test for each horizontal layer of subgrade for every 5,000 sq. ft. of unpaved areas.

8. If in the opinion of the Engineer, based on testing reports and inspection, subgrade or fills which have been placed are below specified density, provide additional compaction and re-testing as required at no additionalexpense to the Owner.

Q. Maintenance:

1. Protection of Graded Areas: Protect newly graded areas from traffic and erosion. Keep free of trash and debris.

a. Repair and re-establish grades in settled, eroded, and rutted areas to specified tolerances.

2. Reconditioning Compacted Areas: Where completed compacted areas are disturbed by subsequent construction operations or adverse weather, scarify surface, reshape, and compact to required density prior to furtherconstruction.

R. Insufficient Fill Material: The Contractor shall be responsible for locating, testing, purchasing, hauling, spreading, and compacting all required fill material as specified herein.

S. Excess Cut Material: If the quantity of onsite excavated material is in excess of the quantities necessary to provide finish grade elevations indicated on the drawings, the excess material shall be disposed of offsite by the Contractor at no additional cost to the Owner.

3.02 FINISH GRADING

A. Prior to substantial completion of project, the Contractor shall spread topsoil (either stockpiled or hauled-on if the stockpiled topsoil is insufficient for full coverage) to the minimum depth specified over all site areas disturbed by construction activities. Additional haul-on topsoil, if required, shall be the responsibility of the Contractor to include locating, testing, purchasing, hauling, spreading, etc.

3.03 CLEAN-UP AND DISPOSAL

A. Transport trash, rubbish, and debris daily from site and legally dispose of.

1. Remove and promptly dispose of contaminated, vermin infested, or dangerous materials encountered.

2. Do not burn or bury materials on site.

B. Remove tools, equipment, and protection when work is complete and when authorized to do so by local authorities having jurisdiction and Owner.

C. The Contractor shall restore all facilities interfered with to their original condition or acceptable equivalent. The cost of such restoration or damage caused directly by his work shall be paid for by the Contractor.

END OF SECTION

SECTION 02220
DEMOLITION

PART 1 - GENERAL

1.01 SCOPE

A. The Contractor shall furnish all labor, materials, equipment, and incidentals required for demolition, removal and disposal work as shown on the Contract Drawings and as specified herein.

B. Included, but not limited to, are demolition and removals of existing materials, equipment, or work necessary to install the new work as shown on the Contract Drawings and as specified herein.

C. Demolitions and removals which may be specified under other Sections shall conform to requirements of this Section.

1.02 RELATED WORK

A. Section 02315 – Excavation, Trenching and Backfill for Utilities

1.03 SUBMITTALS

A. Schedule: Submit for approval proposed methods, equipment, and operations sequence.

1.04 JOB CONDITIONS

A. Explosives:

1. No blasting will be allowed.

PART 2 - PRODUCTS (NOT USED)

PART 3 - EXECUTION

3.01 GENERAL

A. All materials and equipment removed from existing work shall become the property of the Contractor except for those which the Owner has identified and marked for his use. All materials and equipment marked by the Owner to remain his shall be carefully removed by the Contractor so as not to be damaged, cleaned

and stored on or adjacent to the site in a protected place specified by the Engineer or delivered to a location specified by the Owner.

B. The Contractor shall dispose of all demolition materials, equipment, debris, and all other items not marked by the Owner to remain as his, off the site and in conformance with all existing applicable laws and regulations.

a. All asphalt and concrete removed for construction must be disposed of in a legally and lawfully operated C&D landfill with tickets provided to Engineer as proof of lawful disposal, or asphalt may be recycled at an asphalt plant with a letter from the asphalt plant as proof of recycling.

C. Pollution Controls:

1. Use water sprinkling, temporary enclosures, and other suitable methods to limit the amount of dust and dirt rising and scattering in the air to the lowest practical level. Comply with governing regulations pertaining to environmental protection.

a. Do not use water when it may create hazardous or objectionable conditions such as flooding, pollution, and groundwater contamination.

b. Clean adjacent structures, facilities, and improvements of dust, dirt, and debris caused by demolition operations.

D. The demolition work shall include removal to two (2) feet below proposed grades.

E. All rails from railroad removal shall become the property of the Owner and be stored on site as designated by Owner.

3.02 STRUCTURAL REMOVALS

A. The Contractor shall completely remove all structures as shown on the Contract Drawings or as specified herein unless otherwise directed by the Engineer.

B. All concrete, brick, tile, concrete block, roofing materials, reinforcement, structural or miscellaneous metals, plaster, wire mesh and other items contained in or upon the structure shall be removed and taken from the site, unless otherwise approved by the Engineer. Demolished items shall not be used in backfill.

3.03 DISCONNECTION OF UTILITY SERVICES

A. Utilities shall be disconnected at the points indicated. Where such disconnection will interrupt the utility services to an area not included in the Contract, arrangements for such interruption shall be reviewed with the Engineer at least 72 hours in advance of the interruption.

3.04 BURNING

A. The use of burning at the project site for the disposal of refuse and debris will not be permitted.

3.05 PROTECTION OF EXISTING WORK

A. Existing work to remain shall be protected from damage. Work damaged by the Contractor shall be repaired or restored to its original condition or acceptable equivalent.

3.06 EXISTING UTILITIES

A. Utility Services: Disconnections of utility services shall be coordinated so as not to affect service to other areas outside of the project limits. The owners of all utilities must be contacted prior to proceeding with work. See special project provisions for limitations on water outages.

B. Utilities: Remove or abandon all existing utilities as indicated. When utility lines are encountered, that are not indicated on the drawings, they shall be removed or abandoned to the extent that they would project into or interfere with the new construction.

3.07 DISPOSITION OF MATERIAL

A. Title to Materials: Title to all materials and equipment to be demolished, except railroad trackage, track hardware, crossties to be salvaged, concrete to be crushed, and historical items, is vested in the Contractor upon receipt of notice to proceed. The Owner will not be responsible for the condition, loss or damage to such property after notice to proceed.

B. Material for Salvage: Material that is salvageable will be removed from the project site by the Contractor.

C. Unsalvageable Materials: Masonry and other noncombustible materials, other than concrete permitted to remain in place and concrete to be stockpiled and crushed, shall be disposed of by the Contractor off the property. Other materials

such as non-useable cross-ties, lumber, etc. shall be removed from the site by the Contractor.

3.08 HISTORICAL ITEMS

A. There are no known historical items on the project site; however, if historical items are discovered, remove historical items in a manner to prevent damage.

B. Turn over historical items, if found, to the Owner for disposition such as:

1. Corner Stones
2. Content of Corner Stones
3. Document Boxes wherever located on the site.
4. Belgian Block

3.09 CLEAN-UP

A. Contractor shall remove from the site all debris resulting from the demolition operations as it accumulates. Upon completion of the work, all materials, equipment, waste and debris of every sort shall be removed and the premises shall be left clean, neat and orderly.

B. All materials and debris resulting from demolition and removal operations shall be disposed of off-site in an authorized, permitted disposal site.

a. All asphalt and concrete removed for construction must be disposed of in a legally and lawfully operated C&D landfill with tickets provided to Engineer as proof of lawful disposal, or asphalt may be recycled at an asphalt plant with a letter from the asphalt plant as proof of recycling.

END OF SECTION

SECTION 02315
EXCAVATION, TRENCHING AND BACKFILL FOR UTILITY SYSTEMS

PART 1 – GENERAL

1.01 SCOPE

A. Furnish all labor, materials, equipment and incidentals necessary to perform all excavation, trenching and back fill required to complete the work shown on the Drawings and specified herein. The work shall include, but is not limited to; excavation for manholes, vaults, electrical manholes, hand holes, conduits, cables, raceways and ducts and pipes; all backfilling, embankment and grading; disposal of waste and surplus materials; and all related work such as sheeting, bracing and dewatering.

B. Obtain materials required for backfill, fill, or embankments in excess of that available on the site from other sources. Include all costs of obtaining off-site materials in the contract price.

1.02 RELATED WORK

N/A

1.03 REFERENCES

A. American Society for Testing and Materials.

1.04 TESTING SERVICES

A. General: The Contractor shall select a qualified independent testing laboratory for the purpose of identifying soils, checking densities, and classifying soils materials during construction. All testing will be paid for by the Contractor. **Copies of all test results shall be furnished to the Engineer.**

B. All materials to be used in the work shall be tested prior to the use to show conformance with the requirements of these specifications. Materials being used in the work, which have been tested previously, may be subjected to further tests from time to time and may be rejected if found defective. Rejected materials shall be removed from the project immediately, notwithstanding the results of former tests to which they have been subjected.

C. Moisture-Density Tests: Testing shall be in accordance with ASTM Methods D698

and D1557. A test shall be performed on each type of material used in the work regardless of source. Tests will be accompanied by particle-size analyses of the soils tested (ASTM Methods D421 and D422). Changes in color, gradation, plasticity or source of fill material will require the performance of additional tests. Copies of all test results shall be furnished to the Engineer.

D. Field Density Tests: Tests shall be made in accordance with ASTM Method D1556. Tests shall be made in accordance with the following minimum schedule or as required by the soils technician or as may be directed by the Engineer:

1. In proposed street and road right-of-way, parking areas, yards, & other traveled areas, one test per 100 linear feet of trench for each 4’ of depth.

2. Under buildings and structures, each lift of backfill shall be tested from undercut level up to slab support level for each 50 linear feet of trench.

3. In unpaved areas, woodland, fields, pastures, areas not open to vehicular traffic, & areas where no structures are proposed, one test per 500 linear feet of trench for each 4’ of depth.

E. Submittals

1. The soils technicians will submit formal reports of all compaction tests and retests. The reports are to be furnished to the Owner and the Engineer as soon as possible upon completion of the required tests.

2. This report information is to include but not be limited to the following:

   a. Date of the test and date submitted.
   b. Location of test.
   c. Wet weight, moisture content and dry weight of field sample.
   d. Description of soil.
   e. Maximum dry density and moisture content of the lab sample which best matches the field sample in color, texture, grain size and maximum dry density.
   f. Ratio of field dry density to maximum lab dry density expressed as a percentage.
   g. Comments concerning the field density passing or failing the specified compaction.
   h. Comments about recompaction if required.

F. Compaction Results

1. If any compaction tests reveal that fill or backfill is not compacted as

specified, the Contractor shall scarify and recompact as required to achieve the specified density. Additional compaction tests shall be made to verify proper compaction. These additional tests, required due to failure of the original test shall be paid for by the Contractor without reimbursement by the Owner.

2. The soils technician is to advise the Engineer and the Contractor's Superintendent immediately of any compaction tests failing to meet the specified minimum requirements. No additional lift is to be placed on a lift with any portion failing.

1.05 PROTECTION

A. Sheeting and Bracing

1. Furnish, put in place, and maintain such sheeting and bracing as may be required to support the sides of excavations, to prevent any movement which could in any way diminish the ridge of the excavation below that necessary for proper construction, and to protect adjacent structures from undermining or other damage. If the Engineer is of the opinion that at any points sufficient or proper supports have not been provided, he may order additional supports put in at the expense of the Contractor, and compliance with such order shall not relieve or release the Contractor from his responsibility for the sufficiency of such supports. Care shall be taken to prevent voids outside of the sheeting, but if voids are formed, they shall be immediately filled and rammed. Where soil cannot be properly compacted to fill a void, lean concrete shall be used as backfill at no additional expense to the Owner. Sheeting and Bracing requirements are further defined in OSHA Standards, Subpart P, Part 1926 of the Code of Federal Regulations.

2. The Contractor shall construct the sheeting outside the neat lines of the foundation unless indicated otherwise to the extent he deems it desirable for his method of operation. Sheeting shall be plumb and securely braced and tied in position. Sheeting and bracing shall be adequate to withstand all pressures to which the trench will be subjected. Any movement or bulging which may occur shall be corrected by the Contractor at his own expense so as to provide the necessary clearances and dimensions.

3. Where sheeting and bracing is required to support the sides of excavations, the Contractor shall engage a Professional Engineer, registered in the State of Georgia, to design the sheeting and bracing. The sheeting and bracing installed shall be in conformity with the design, and certification of this shall be provided by the Professional Engineer.

4. The Contractor shall leave in place to be embedded in the backfill all sheeting and bracing not shown on the Drawings but which the Engineer may direct him in writing to leave in place at any time during the progress of the work for the purpose of preventing injury to structures, utilities, or property, whether public or private. The Engineer may direct that timber used for sheeting and bracing be cut off at any specified elevation. The contractor will be paid for such sheeting directed by the Engineer to be left in place in accordance with the General Conditions. All timber sheeting to be left in place shall be treated.

5. All sheeting and bracing not left in place shall be carefully removed in such manner as not to disturb utilities, or property. All voids left or caused by withdrawal of sheeting shall be immediately refilled with sand by ramming with tools especially adapted to that purpose, or otherwise as acceptable to Engineer and Owner.

6. The right of the Engineer to order sheeting and bracing left in place shall not be construed as creating any obligation on his part to issue such orders, and his failure to exercise his right to do so shall not relieve the Contractor from liability for damages to persons or property occurring from or upon the work on the part of the Contractor to leave in place sufficient sheeting and bracing to prevent any caving or moving of the ground.

7. No sheeting is to be withdrawn if driven below mid-diameter of any pipe, and under no circumstances shall any sheeting be cut off at a level lower than 1 ft above the top of any pipe. The cost of said sheeting shall be part of the base bid.

B. Dewatering and Drainage

1. The Contractor shall at all times during construction provide and maintain proper equipment and facilities to remove all water entering excavations, and shall keep such excavations dry so as to obtain a satisfactory undisturbed subgrade foundation condition until the fills, structures or pipes to be built thereon have been completed to such extent that they will not be floated or otherwise damaged by allowing water levels to return to natural levels. The Contractor shall engage a Geotechnical Engineer, Registered in the State of Georgia where required, to design the dewatering system. The Contractor shall submit to the Engineer for review the design of the dewatering systems prior to commencing work.

2. The Contractor shall furnish, install, maintain, operate and remove a

temporary dewatering system consisting of trenches, sump pits, deep wells, well points, or other methods as required to lower and control the groundwater level so that the pipes may be installed in the dry. The Contractor shall assume full responsibility for the design and installation of an adequate dewatering system. The Contractor shall, at his own expense, correct all damage resulting from inadequacy of the dewatering system or from flooding of the construction site from other causes.

3. The Contractor shall maintain the water level below the excavated area for the various phases of the work continuously and shall make such provisions as may be necessary to avoid interruptions due to weather, labor strikes, power failures, or other delays. He shall provide and have ready for immediate use at all times diesel or gasoline powered standby pumping units to serve the system in case of failure of the normal pumping units.

4. Piping and boiling, or any form of uncontrolled seepage, in the bottom or sides of the excavation shall be prevented at all times. If for any reason the dewatering system is found to be inadequate to meet the requirements set forth herein, the Contractor shall at his own expense make such additions, changes and/or replacements as necessary to provide a satisfactory dewatering system.

5. Dewatering shall at all times be conducted in such a manner as to preserve the undisturbed bearing capacity of the subgrade soils at proposed bottom of excavation. Well or sump installations shall be constructed with proper sand filters to prevent drawing of finer grained soil from the surrounding ground.

6. Water entering the excavation form surface runoff shall be collected in shallow ditches around the perimeter of the excavation, drained to sumps, and pumped from the excavation to maintain a bottom free from standing water.

7. The Contractor shall take all additional precautions to prevent uplift during construction. The Contractor shall maintain the groundwater level below the pipe so flotation is prevented.

8. Drainage water shall be disposed of through a desilting basin which will prevent the discharge of sediment into any surface waters or existing drains, and to prevent flow or seepage back into the excavated area.

9. Flotation shall be prevented by the Contractor by maintaining a positive and continuous operation of the dewatering system. The Contractor shall

be fully responsible and liable for all damages which may result from failure of this system.

10. Removal of dewatering equipment shall be required; the material and equipment constituting the system, shall be removed by the Contractor.

11. The Contractor shall take all necessary precautions to preclude the accidental discharge of fuel, oil, etc. in order to prevent adverse effects on groundwater quality.

C. Culverts and Ditches

1. Protect drainage culverts from damage. If damaged, restore to satisfactory condition at no cost to the Owner.

2. If it is necessary to remove a culvert, do not replace until the proposed pipeline is installed and trench backfilled and compacted to the subgrade of the culvert. Replace culverts to the line and grade established by the Owner.

3. Backfill minor drainage ditches so that the upper one foot of material between ditch banks is topsoil, loam, or clay.

4. Compact this material for the full ditch width to a minimum of 95% of maximum density as determined by ASTM D 1557.

5. Ditches steeper than 2:1 slope shall be protected and reinforced with a synthetic fiber or grid material. Contractor has the option not to use reinforcement for slopes 2:1 or flatter. Correct any ditch erosion occurring as a result of pipeline construction at no cost to the Owner.

D. Water, Gas, Telephone, Power, Cable

1. Protect all other utilities from damage. Notify utility owner prior to start of excavation as directed in sub-paragraph 3-5-2 of the General Conditions. If, during the work the utility is damaged, notify the utility company and the Owner immediately. Do not attempt to repair or replace damaged utilities unless so directed by the utility company and approved by the Engineer. Payment for restoration of damaged utilities shall be the Contractor's responsibility. Call before you dig – Utilities Protection Center 1-800-282-7411.

1.06 JOB CONDITIONS

A. Soils

1. The contractor shall examine the site or undertake his own soil borings prior to submitting his bid, taking into consideration all conditions that may affect his work. The Owner and Engineer will not assume responsibility for subsoil quality or conditions. The Contractor shall accept the site in its existing condition, and shall assume the risk of encountering whatever materials as may occur. The Contractor shall make his own determination of the soil structure and site conditions as it may affect the work.

B. Existing Utilities

1. Locate existing underground utilities in the areas of work. If utilities are to remain in place, provide adequate means of protection during earthwork operations.

2. Should uncharted, or incorrectly charted, piping appear in the excavation, consult the Engineer and the Owner of such piping or utility immediately for directions.

3. Cooperate with Owner and utility companies in keeping respective services and facilities in operation. Repair damaged utilities to satisfaction of utility owner.

4. Demolish and completely remove from site existing underground utilities indicated on the Drawings to be removed.

C. Protection of Persons and Property

1. Barricade open excavations occurring as part of this work and post with warning lights. Operate warning lights as recommended by authorities having jurisdiction.

2. Protect structures, utilities, sidewalks, pavements, and other facilities from damage caused by settlement, lateral movement, undermining, washout and other hazards created by earthwork operations.

1.07 SUBMITTALS

A. Submit to the Engineer for review in accordance with Section 01300 the proposed methods of construction, including dewatering, excavation, filling, compaction, and backfilling for the various portions of the work. Review shall be for method only. The Contractor shall remain responsible for the adequacy and safety of the methods.

B. Submit to the Engineer for review in accordance with Section 01300 representative samples of each type of proposed fill material weighing approximately 50 lbs at least 15 days prior to the date of anticipated use of such material.

PART 2 – PRODUCTS

2.02 MATERIALS

A. Backfill materials shall be natural or processed mineral soils, blasted and crushed rock, or masonry rubble. Fill materials shall be free of all organic material, trash, snow, ice, frozen soil or other objectionable materials. Clay soils having a natural in-place water content in excess of 30 percent are considered unsuitable for stockpiling and/or future use. Fill materials to be used have been classified under categories specified below.

B. Embedment materials listed here include a number of processed materials plus the soil types defined by the USCS Soil Classification Systems in ASTM D2487. These materials are grouped into categories according to their suitability for this application:

1. Class I: Angular crushed stone or rock (1/4 to 1-1/2 inches), crushed gravel, crushed slag; large voids with little or no fines.

2. Class II: Coarse sands and gravels with maximum particle size of 40 mm (1-1/2 inches), including variously graded sands and gravels containing small percentages of fines, generally granular and non-cohesive, either wet or dry. Soil types GW, GP, SW and SP are included in this class.

3. Class III: Fine sand and clayey gravels, including fine sands, sand-clay mixtures, and gravel-clay mixtures. Soil types GM, GC, SM and SC are included in this class.

4. Class IV: Silt, silty clays and clays including inorganic clays and silts of medium to high plasticity and liquid limits. Soil types MH, CH and CL are included in this class. These materials are not to be used for bedding, haunching or initial backfill.

5. Class V: This class includes the organic soils OL, OH and PT as well as soils containing frozen earth, debris, rocks larger than 40 mm (1-1/2 inches) in diameter, and other foreign materials. These materials shall not be used for bedding, haunching and initial backfill.

C. Granular Fill, shall be sound, hard, durable crushed stone meeting the following gradation requirements and shall conform to ASTM C33, Size No. 57.

Sieve Size	Percent Passing by Weight
1-1/2-in	100
1-in	90-100
1/2-in	26-60
No. 4	0-7
No. 8	0-3

D. Sand shall conform to ASTM Standard C33 for concrete sand.

PART 3 – EXECUTION

3.01 EXCAVATION

A. The Contractor shall proceed with caution in the excavation and preparation of the trench so that the exact location of underground structures in the trench zone may be determined before being damaged. He shall be held responsible for the repair or replacement of such structures when broken or otherwise damaged because of his operations.

B. The Contractor shall make explorations and excavations at no additional charge to the Owner to determine the location of existing underground structures.

C. Utilities and other piping shall be laid in open trenches as shown and specified. Trenches shall be excavated to the designated lines and grades, beginning at the outlet end and progressing toward the upper end in each case. Trenches for pipe shall be shaped to the lower 1/3 of the pipe and provide uniform and continuous bearing. Bell holes shall be dug to allow ample room for working fully around each joint.

D. Trenches shall be of minimum width to provide ample working space for making joints and shall be not less than 16 inches greater than the outer diameter of the pipe or more than 18 inches greater than the outer diameter of the pipe. Sides of trenches shall be closely vertical to top of pipe and shall be sheet piled and braced where soil is unstable nature. Above the top of the pipe, trenches may be sloped. The ridge of the trench above this level may be wider for sheeting and bracing and the performance of the work.

E. Trenches shall be excavated on the alignments shown on the Plans, and to the depth and grade necessary to accommodate the pipes at the elevations shown.

Where elevations of the invert or centerline of a pipe are shown at the ends of a pipe, the pipe shall be installed at a continuous grade between the two elevations.

F. Excavation in excess of the depth required for proper shaping shall be corrected by bringing to grade the invert of the ditch with compacted coarse, granular material at no additional expense to the Owner. Bell holes shall be excavated to relieve bell of all load, but small enough to insure that support is provided throughout the length of the pipe barrel.

G. Excavation in excess of the depths required for manholes and other structures shall be corrected by placing a subfoundation of 1500 psi concrete, at no additional expense of the Owner.

H. If trenches are excavated to widths in excess of those specified, or if the trench walls collapse, the pipe shall be laid in accordance with the next better class of bedding at the expense of the Contractor.

3.02 TRENCHES

A. Trenches shall be maintained in a safe condition to prevent hazardous conditions to persons working in or around the trench.

B. Braced and sheeted trenches and open trenches shall comply with all State and Federal Laws and Regulations, and local ordinances relating to safety, life, health and property.

C. The top portion of the trench may be excavated with sloping or vertical sides to any width which will not cause damage to adjoining structures, roadways, utilities, etc. The bottom of the trenches shall be graded to provide uniform bearing and support each section of the pipe on undisturbed soil every point along its entire length, except for the portions of the pipe sections excavated for bell holes and for the sealing of pipe joints. Bell holes and depressions for joints shall be dug after the trench bottom has been graded and in order that the pipe rests upon the trench bottom for its full length and shall be only of such length, depth and width for making the particular type of joints. The bottom of the trench shall be rounded so that at least the bottom one-third of the pipe shall rest on undisturbed earth for the full length of the barrel as jointing operations will permit. This part of the excavation shall be done manually only a few feet in advance of the pipe laying by workmen skilled in this type of work.

D. The sides of all trenches and excavation for structures shall be held by stay bracing, or by skeleton or solid sheeting and bracing according to conditions encountered, to protect the excavation, adjoining property and for the safety of personnel. Bracing and shoring may be removed then the level of the backfilling has reached

the elevation to protect the pipe work an adjacent property. When sheeting or shoring above this level cannot be safely removed, it may be left in place. Timber left in place shall be cut off at least 2 feet below the surface.

3.03 PILING EXCAVATED MATERIALS

A. All excavated material shall be piled in a manner that will not endanger the work and that will avoid obstructing roadways.

3.04 LIMIT TO LENGTH OF OPEN TRENCH

B. Pipe trenches shall not be excavated more than 400 feet in advance of pipe laying and all work shall be performed to cause the least possible inconvenience to the public. Adequate temporary bridges or crossings shall be constructed and maintained where required to permit uninterrupted vehicular and pedestrian traffic.

3.05 REMOVAL OF UNSUITABLE MATERIAL

A. Should overdepth excavation be necessary to remove unsuitable material and to replace with satisfactory material, the Contractor will be paid a negotiated amount for this work based on the following requirements:

1. When the trench is excavated to the plan depth or as required by these Specifications, and soft or other material not suitable for bedding purposes is encountered in the trench, the Contractor shall immediately notify the Engineer for inspection and measurement of the unsuitable material to be removed.

2. No overdepth excavation or backfilling of the overdepth excavated trench shall start until proper measurements of the trench have been taken by the Engineer for the determination of the quantity in cubic yards of unsuitable material excavated. Backfill material and backfilling shall conform to the requirements specified in 3.08 below.

3. No payment will be made for any overdepth excavation of soft unstable material due to the failure of the Contractor to provide adequate means to keep the trench dry.

4. No payment will be made for any overdepth excavation of the unsuitable material and replacement not inspected and measured by the Engineer prior to excavation.

1.06 PIPE BEDDING

A. **Bedding for all types of pipe shall be in accordance with the bedding detail provided in the Plans.**

B. Bedding of Ductile Iron Pipe

1. Pipe shall be laid on foundations prepared in accordance with ANSI/AWWA C600 as modified herein, and in accordance with the various classes of bedding required by the trench width and trench depth for the size of pipe to be laid. Typical bedding shall be included in the appropriate unit price bid for ductile iron pipe.

C. Bedding of PVC Pipe

1. Pipe shall be bedded true to line and grade with uniform and continuous support from a firm base in accordance with ASTM D2321 as modified herein.

D. Bell Holes: Bell holes shall be provided in all classes of bedding to relieve pipe bells of all load, but small enough to insure that support is provided throughout the length of the pipe barrel.

E. Bedding material shall be placed on a flat bottom trench and thoroughly compacted by tamping or slicing with a flat blade shovel. Compacted bedding material shall be extended up the sides of the pipe to the heights shown in the bedding detail in the Plans.

F. Overwidth Excavation: If trenches are excavated to widths in excess of those specified below, or if trench walls collapse, pipe shall be laid in accordance with the requirements for at least the next better class of bedding at the expense of the Contractor.

G. Pipe shall be bedded true to line and grade with uniform and continuous support from a firm base in accordance with ASTM D2321 as modified herein. Blocking shall not be used to bring the pipe to grade. Typical bedding material shall be included in the unit price for plastic and FRP pipes.

H. Compaction of foundation, bedding, haunching and initial backfill shall extend to the trench wall.

I. Bedding material in the area around the pipe shall be installed with care. Care shall be used to insure that sufficient material has been worked under the haunch of the pipe to provide adequate side support. Precautions must be taken to prevent movement of the pipe during placing of the material through the pipe

haunch. See bedding detail in plans for further detail.

J. Avoid contact between the pipe and compaction equipment. Compaction of haunching, initial backfill and backfill material shall be done in such a way so that compaction equipment will not have a damaging effect on the pipe.

K. The trench depth shall be as shown on the plans or as required to provide the depth of cover as specified by the purchaser.

3.08 BACKFILLING

A. Backfilling consists of placing suitable materials removed during the excavation into the excavated areas, placing embedment materials and compacting the same to a density equal to or greater than what exists before excavation or as specified herein.

B. Borrow Backfill: Borrow backfill will be required if there is not sufficient suitable material available from other parts of the work to backfill the trenches. Borrow backfill from approved borrow pits shall be used. Only those soils in the borrow pits that meet the specified requirements for suitable material shall be used.

C. All backfill material shall be free of stones, concrete and clay lumps larger than 1/3 cubic foot. Roots, stumps and rubbish which will decompose will not be permitted in the backfill. Backfill material shall have its moisture content corrected, as may be necessary before being placed in the trench to bring the moisture content to approximately "optimum" for good compaction. Any rock, stone, concrete, clay lumps larger than 1/3 cubic foot in volume, rubbish and debris shall be removed from the site and disposed of by the Contractor in a lawful manner.

D. The existing sanitary sewer pipe is 18" clay and shall be removed and disposed of properly or may be "demolished in place" by removing pipe pieces larger than 6" in diameter. For "demolish in place", clay pipe pieces smaller than 6" in diameter may be mixed in with specified backfill material. Existing pipe at creek crossing is ductile iron and shall be removed and disposed of by contractor. Existing manholes shall be removed and disposed of by contractor.

E. Select Backfill: Select backfill material shall be placed below, around each side, and over the top of the pipe in approximately horizontal layers not exceeding 8-inches in thickness to a minimum height of 6-inches above the pipe crown or greater as detailed herein and on the Drawings. This initial backfill shall be placed immediately after the pipes are laid and joints have been observed by the Engineer to anchor and protect the pipe from damage by subsequent backfill and ensure the uniform distribution of the loads over the top of the pipe. Select Material shall be Class I. The Contractor shall backfill both sides of the pipe

simultaneously to prevent side pressures and each layer shall be compacted thoroughly with mechanical tamping equipment in such manner as not to damage the pipe, pipe joints or shift the pipe alignment. Workmen shall not be permitted to walk over the pipe until at least 12 inches of compacted fill has been placed over the pipe. The Contractor shall not use water to obtain compaction except for adding water to the backfill material before placing in the trench to bring the moisture content to approximately "optimum" for good compaction.

F. General Backfilling: After initial, select backfill material has been placed and tamped, the remainder of the trench may be backfilled with general excavated material, except that no rock, unless in small shattered fragments, will be permitted to be mixed with other backfill material.

1. Backfilling under buildings, and structures: Backfilling a pipe trench under structures and buildings consists of placing structural fill in the trench in 4 inch maximum loose lifts (if hand tamped) and 6” maximum loose lifts (if machine tamped) and compacting an area from the undercut level to the slab support level to 100% of the modified Proctor maximum dry density (ASTM D 1557). No water shall be used to secure compaction except for adding water to the backfill material before placing in the trench to bring moisture content approximately "optimum" for good compaction. Each loose lift shall be tamped before additional backfill material is placed in the excavated area.

2. Street and Road Right – of – Way, Parking Areas, Yards and Other Traveled Areas: Backfill shall consist of placing structural fill in the trench in uniform layers not exceeding six inches (6”) in thickness, with each layer thoroughly compacted to 95% of the modified Proctor maximum dry density (ASTM D 1557) with heavy duty mechanical tampers (“Whacker” or equal).

G. In other areas, including woodlands, fields, pastures, areas not open to vehicular travel, and areas where no structures are proposed or anticipated in the future, the remainder of the ditch may be backfilled by placing fill in ditch and “walking-in” with wheel loaded equipment. Backfill material may be windrowed and maintained in a suitable manner so as to concentrate and pond rainfall runoff over the trench. After sufficient settlement has been obtained, the Contractor shall complete surface dressing, remove surplus material and clean up in accordance with these Specifications. Wherever trenches have not been properly filled, or if settlement occurs, they shall be refilled, smoothed off and finally made to conform to the surface of the ground. Backfilling shall be carefully performed and the original surface restored as specified herein. Compaction in these areas shall not be less than 90% of the modified Proctor maximum dry density. Surplus material shall be disposed of by the Contractor.

3.09 PROTECTION OF WATER SUPPLY PIPES

A. Horizontal Separation: Sewers and force mains shall be laid at least 10 feet horizontally from any existing or proposed watermain. The distance shall be measured edge to edge. In cases where it is not practical to maintain a 10 foot separation, such deviation may allow installation of the sewer or force main closer to the watermain, provided that the watermain is in a separate trench or on a undisturbed earth shelf located on the side of the sewer or force main and at an elevation so the bottom of the watermain is at least 18 inches above the top of the sewer or force main.

B. Crossings: Sewers and force mains crossing water mains shall be laid to provide a minimum vertical distance of 18 inches between the outside of the watermain an the outside of the sewer or force main. This shall be the case where the watermain is either above or below the sewer or force main. The crossing shall be arranged so that the sewer or force main joints will be equidistant and as far as possible from the watermain joints. Where a watermain crosses under a sewer or force main, adequate structural support shall be provided for the sewer or force main to prevent damage to the watermain.

C. Special Conditions: When it is impossible to obtain proper horizontal and vertical separation as stipulated above, the sewer or force main shall be designed and constructed equal to water pipe, and shall be pressure tested to assure water tightness prior to backfilling.

3.10 UTILITY CONSTRUCTION IN OTHER EXCAVATION

A. Where utilities are required to be constructed in areas also requiring excavation and backfill for other work, coordinate the work so that the parts come together properly and the construction of the various parts can be done without damage to other parts. Place bedding which will form bearing for pipes, using suitable material and shaping to the lower 1/3 of the pipe to provide uniform and continuous bearing. Compaction of backfill material which will form bearing shall be equal to that specified hereinbefore under "Backfilling under buildings and structures". After the pipe or other utility is placed, backfilling shall proceed as specified hereinbefore following the requirements specified under Section 3.08 as applicable.

END OF SECTION

SECTION 02316

ROCK REMOVAL

PART 1 GENERAL

1.01 SCOPE OF WORK

Payment to be limited to trench width – no rock outside standard trench width to be paid for

A. Removal of all rock materials discovered during excavation for the purpose of construction. Removal shall include drilling and/or blasting incidental thereto and disposal of excavated materials.

B. When necessary for prosecution of the Work, the use of explosives to assist rock removal may be exercised by Contractor provided this use is in compliance with all local, State, Federal and other Governmental regulations applying to transportation, storage, use and control of explosives.

1.02 PROPOSAL UNIT PRICING

A. A base quantity and stipulated cost are included in the bid form under the line item “Rock Removal – Base Cost”. A separate line item “Rock Removal - Premium Cost” is included in the bid form and can be utilized if the Contractor’s bid for “Rock Removal” is greater than the stipulated cost. If this is the case, the Contractor will specify the additional amount over the stipulated cost as the unit price for “Rock Removal Premium” on bid form.

1.03 RELATED WORK

A. Section 02315 – Excavation, Trenching and Backfill for Utility Systems

1.04 REFERENCES

A. NFPA 495 – Code for the manufacture, Transportation, Storage, and Use of Explosive Materials.

B. OSHA 2207 – Construction Industry Standards, Subpart T – Demolition.

1.05 QUALITY ASSURANCE

A. Explosives Firm – Company specializing in explosives for disintegration of subsurface rock with documented experience.

1.06 REGULATORY REQUIREMENTS

A. Conform to applicable code for explosive disintegration of rock.

B. Obtain permits from authorities having jurisdiction before explosives are brought to site or drilling is started.

C. All explosives shall be stored securely in compliance with all laws and ordinances, and all such storage places shall be clearly marked DANGEROUS EXPLOSIVES. Blasting caps, electric blasting caps, detonating primers, and primed cartridges shall not be stored in the same magazine with other explosives or blasting agents. Locked storage shall be provided satisfactory to the Engineer, never closer than 1,000 feet from any road, building, or camping area.

PART 2 – PRODUCTS

2.01 MATERIALS

A. Rock (Definition) – Solid mineral material with a volume in excess of ½ cubic yard that cannot be broken down and/or removed by use of heavy construction equipment, such as: an excavator having a bucket curling force rated at not less than 18,300 pounds (Caterpillar 215 or equivalent), bulldozer such as a Caterpillar D8K equipped with single tooth hydraulic ripper, hydraulic hammer, ¾ cubic yard capacity power shovel, rooters, etc., and without drilling or blasting. Materials which can be loosened with a pick, hard pan, boulders less than ½ cubic yard in volume, chert, clay, soft shale, soft and disintegrated rock and any similar material shall not be considered as rock. (All such materials to be considered unclassified or common excavation).

B. Explosives – Shall be suitable for intended purposes at the Contractor's option subject to review by Owner and Engineer.

C. Delay Devices – Type recommended by explosives firm to be used as accessory to explosives. Subject to review by Engineer.

D. Blasting Mat – When the use of explosives is necessitated during prosecution of the Work, Contractor shall incorporate the use of blasting mats or type recommended by explosives firm to lessen the danger of projectiles occasionally resultant from blasting of rock.

PART 3 EXECUTION

3.01 INSPECTION

A. Conduct survey and document conditions of buildings near locations of rock removal, prior to blasting, and photograph existing conditions identifying existing irregularities.

B. Advise owners of adjacent buildings or structures, in writing, prior to executing seismographic survey. Explain planned blasting and seismic operations.

C. Contractor shall obtain seismic survey prior to rock excavation to determine maximum charges that can be used at different locations in area of excavation without damaging adjacent properties or other work.

D. Contractor shall verify site conditions and note irregularities affecting work of this Section prior to performing any operations involving explosives. Contractor shall submit to Owner, for review, a detailed plan for using explosives to include, but not limited to:

1. Sequence of Work

2. Equipment

3. Protection to be provided for existing structures to remain

4. Personnel

    a. Training

    b. Previous experience with the use of explosives in similar situation

E. Beginning work of this Section means acceptance of existing condition.

F. Rock in utility trenches shall be excavated over the horizontal limits of excavation and to depths as follows:

Size of Pipeline (Inches)	Depth of Excavation Below Bottom of Pipe (Inches)
Less than 4	6
4 to 6	8
Over 8	12

Space below grade for pipe shall then be backfilled with minus ¾-inch crushed rock or gravel or other approved materials and tamped to proper grade.

3.02 ROCK REMOVAL – MECHANICAL METHOD

A. Excavate for and remove rock by the mechanical method.

B. Where pipes are constructed on concrete cradles, rock shall be excavated to bottom of cradle as shown on plans.

C. Where rock foundation is obtained at grade for over 50 percent of area of any one structure, the portion of foundation that is not rock shall be excavated below grade to reach a satisfactory foundation of rock. The portion below grade shall be backfilled with Class C concrete.

D. Where rock foundation is obtained at grade for less than fifty (50%) of any one structure and satisfactory rock cannot be found over the remaining area by reasonable additional excavation, the rock shall be removed for a depth of twelve (12) inches below grade and the space below grade shall be backfilled with brushed stone as specified for pipelines.

E. Rock excavation near existing pipelines or other structures shall be conducted with utmost care to avoid damage. Injury or damage to other structures and properties shall be promptly repaired to the satisfaction of owner and by Contractor at his own expense.

F. Rock excavation for all structures and adjacent trenches under this contract and any other rock excavation directed by Owner shall be completed before construction of any structure is started in the vicinity.

G. Do not use excavated rock as backfill material. Remove excavated material from site, which is not suitable for use as rip rap.

H. Contractor shall correct unauthorized rock removal by backfill to grade with Class C concrete in accordance with backfilling and compaction requirements of Section 02315 at his own expense.

3.03 ROCK REMOVAL – EXPLOSIVES METHODS

A. If rock is uncovered requiring the explosives method for rock disintegration and removal, the Engineer shall be notified immediately so that the surface can be examined. Blasting will not be permitted unless written authorization is given by Engineer. (All materials removed shall be considered common excavation).

B. The Contractor shall notify any owners of adjacent buildings or structures, and any public utility owners having structures or other installations above or below ground, in writing prior to use of explosives. Such notice shall be given sufficiently in advance so that they may take such steps as they may deem necessary to

protect their property from injury and/or damage.

C. Rock excavation by use of explosives shall be conducted with due regard for safety of persons and property in the vicinity and in strict conformance with requirements of local, State and Federal ordinance, laws and regulations governing the use of explosives.

D. Blasting shall be conducted so as not to endanger persons or property, and whenever required, the blast shall be covered with mats or otherwise satisfactorily confined. The contractor shall be held responsible for and shall make good any damage caused by blasting or accidental explosions.

E. The Contractor shall permit only authorized and qualified persons to handle and use explosives.

F. Smoking, firearms, matches, open flame lamps, and other fires, flame or heat producing devices and sparks shall be prohibited in or near explosive magazines or while explosives are being handled, transported or used.

G. No person shall be allowed to handle or use explosives while under the influence of intoxicating liquors, narcotics, or other dangerous drugs.

H. All explosives shall be accounted for at all times. Explosives not being used shall e kept in a locked magazine, unavailable to persons not authorized to handle them. The Contractor shall maintain an inventory and use record of all explosives. Appropriate authorities shall be notified of any loss, theft, or unauthorized entry into a magazine.

I. No explosives or blasting agents shall be abandoned.

J. Contractor's employees authorized to prepare explosive charges or conduct blasting operations shall use every reasonable precaution including, but not limited to, visual and audible warning signals. Flags, or barricades, to ensure safety.

K. It shall be contractor's responsibility to incorporate the use of seismic monitoring should rock excavation, by use of explosives, occur within 150 feet of any residential structure and within 300 feet of any miscellaneous structure. Blasting conducted near dams or bridge foundations shall incorporate the use of a seismic monitor should such blasting occur within 25 feet of said dam and/or bridge foundation. Contractor shall maintain all seismic records and blasting logs to be furnished to Engineer upon request.

L. Disintegrate rock and remove from excavation.

M. Cut away rock at excavation bottom for form level bearing.

N. Remove shaled layers to provide sound and unshattered base for pipe foundations.

O. Do not use excavated rock as backfill material. Remove excavated material from site, which is not suitable for use as rip rap.

P. Correct unauthorized rock removal or overbreak in accordance with backfilling and compaction requirements at his own expense.

3.04 FIELD QUALITY CONTROL

A. Provide for visual inspection of bearing surfaces and cavities formed by removed rock for inspection by Engineer or his representative prior to laying of pipe.

END OF SECTION

SECTION 02370
SOIL EROSION AND SEDIMENT CONTROL

PART 1 – GENERAL

1.01 SECTION INCLUDES

A. Temporary erosion and sediment control measures shall be employed during the construction period and shall include all measures required to prevent soil erosion at the site until permanent erosion control measures are installed. Work shall be accomplished through the use of vegetative measures, such as mulching and grassing, and structural practices including, construction exits, sediment barriers, check dams, inlet sediment traps, etc.

B. Erosion and sediment control measures described herein shall be continued until such time as permanent planting and restoration of natural areas has provided for final stabilization at project site.

C. Failure to install and maintain temporary erosion and sediment control measures throughout the construction period may be cause to halt construction by governing authorities until such measures are correctly installed and operational. Activity covered in this contract is regulated by Georgia's Erosion and Sedimentation Act (O.C.G.A. 12-7-1, *et seq*.).

D. It is the responsibility of the contractor to file the Notice of Intent and Notice of Termination. NDPES sampling is the responsibility of the Contractor.

1.02 RELATED SECTIONS

A. Section 02920 – Permanent (Perennial) Grassing and Landscaping

B. Construction Drawings.

1.03 REFERENCES

A. American Society for Testing and Materials (ASTM).

B. Georgia's Erosion and Sedimentation Act (O.C.G.A. 12-7-1, *et seq*.)

C. "Manual for Erosion and Sediment Control in Georgia" published by the State Soil and Water Conservation Commission of Georgia. Contractor shall be responsible for the acquisition and utilization of the latest edition of the "Manual for Erosion and Sediment Control in Georgia".

1.04 DEFINITIONS

A. Final Stabilization: All soil disturbing activities at the site have been completed, and that for unpaved areas and areas not covered by permanent structures, at least 70% of the soil surface is uniformly covered in permanent vegetation or equivalent permanent stabilization measures (such as the use of rip rap, gabions, permanent mulches, or geotextiles) have been employed.

B. Land-Disturbing Activity: Any activity which may result in soil erosion from water or wind and the movement of sediments into State waters or onto lands within the State, including, but not limited to clearing, grubbing, dredging, grading, excavating, transporting, and filling.

C. Stabilization: 70% of the surface area of the site is covered in a uniform, vegetative cover (permanent or temporary) or anchored mulch of the appropriate thickness with 90% coverage.

1.05 REGULATORY REQUIREMENTS

A. Contractor shall comply with applicable codes, rules, ordinances, regulations, and laws of local, municipal, state and/or federal authorities having jurisdiction over project.

PART 2 – PRODUCTS

2.01 STRUCTURAL PRACTICES

A. All products used must satisfy specifications set forth by the Georgia Department of Transportation and be included on the GDOT Qualified Products List.

2.02 MULCH

A. Dry straw, hay, or wood cellulose fiber of good quality, free of weeds and foreign matter detrimental to plant life.

2.03 TEMPORARY GRASSING

A. All grass seed shall be certified by the Georgia Department of Agriculture.

B. All grass seed shall be in undamaged containers showing percentage of seed mix, year of production, net weight, date of packaging, and location of packaging.

2.04 PERMANENT (PERENNIAL) GRASSING

A. See Section 02920 – Permanent (Perennial) Grassing and Landscaping.

2.05 FERTILIZER AND LIME

A. Fertilizer: Standard commercial grade grass fertilizer with a 10-10-10 (N-P-K) proportion.

B. Lime: Natural, agricultural grade, ground or pulverized dolomitic limestone.

2.06 DUST CONTROL

A. Water, calcium chloride, anionic asphalt emulsion, latex emulsion, resin-in-water emulsion or other approved by the Georgia Department of Transportation may be used.

PART 3 – EXECUTION

3.01 GENERAL

A. The Contractor shall prevent the escape of sediment from the area under construction by installing erosion and sediment control measures and practices prior to, or concurrent with, land-disturbing activities.

B. The Contractor shall maintain erosion and sediment control measures at all times.

C. The Contractor shall complete mulching, temporary grassing, or permanent (perennial) vegetation on all exposed areas within 14 days after disturbance.

D. All structural and vegetative erosion and sediment control measures shall be designed, installed and maintained according to the “Manual for Erosion and Sediment Control in Georgia”.

E. As a minimum, structural practices shall be located and installed, and all disturbed soil areas shall be stabilized using mulching and/or grassing, as specified by the Drawings. If full implementation of the Drawings does not provide for effective erosion and sediment control, the Contractor shall be responsible for the implementation of additional erosion and sediment control measures to control or treat the sediment source.

F. No runoff from disturbed areas shall leave the site untreated.

G. Erosion Control Schedule

1. Prior to the pre-construction conference, Contractor shall submit to the Engineer his proposed erosion control plan for the project in accordance with requirements of this section. The schedule shall be based on an analysis of the project conditions and shall be in written form. This schedule shall specifically indicate the sequence of clearing and grubbing, earthwork operations, including trenching and backfilling, construction of permanent erosion control features and the proposed uses of temporary erosion and sediment control features. Schedule shall also include proposed methods to prevent pollution of streams, lakes and rivers and other water resources.

2 Contractor shall outline his proposed methods of controlling erosion and preventing pollution on public and construction access roads, staging areas and waste disposal areas.

3 Construction shall not commence until the Engineer has accepted the aforementioned plans and schedules. Contractor will be responsible for accomplishment of work in accordance with accepted plans and schedules. Engineer may approve changes made necessary by unforeseen circumstances that are beyond the control of Contractor.

H. Engineer has the authority to limit the surface area of erodible earth materials exposed by clearing and grubbing, the surface area of erodible earth exposed by excavation and backfill operations, and to direct Contractor to provide immediate permanent or temporary erosion and pollution control measures to prevent contamination of adjacent land or water courses.

I. Clearing and grubbing operations shall be so scheduled and performed that grading operations and permanent erosion control features can immediately follow thereafter, if the project conditions permit. Otherwise, temporary erosion control measures will be required between successive construction stages.

J. Engineer will require Contractor to limit the area of excavation, trenching and pipe laying operations in progress commensurate with Contractor's capability and progress in keeping finish grading, mulching, seeding and other permanent and/or temporary measures current with accepted schedule.

3.02 STRUCTURAL PRACTICES

A. All structural practices shall be designed, installed and maintained in accordance with specifications set forth in Chapter 6, Section III of the "Manual for Erosion and Sediment Control in Georgia".

B. Sediment accumulation at structural practices shall not exceed 50% of structure

capacity or height.

C. All structural practices shall be inspected frequently and materials promptly repaired or replaced as necessary to allow proper function of the device.

D. Any construction vehicle passing from a disturbed area onto any paved area or public right-of-way shall pass over a gravel construction exit. If the gravel construction exit cannot adequately remove soil from the vehicle, the vehicle shall be washed and runoff routed to a sediment trap or basin. Any mud or debris tracked or spilled onto roadway shall be immediately removed.

3.03 MULCHING

A. All mulch used as a singular method for erosion control shall be applied and anchored in accordance with specifications set forth in Chapter 6, Section II of the "Manual for Erosion and Sediment Control in Georgia".

B. Mulch can be used for erosion control for up to six months provided that the mulch is applied at the appropriate depth (depending on the type of mulch used), anchored, and maintains a continuous 90% or greater cover of the soil surface.

C. Where staged construction or other conditions not controlled by Contractor prohibit the completion of work in a continuous manner, Engineer may order Contractor to apply mulch to an erodible area.

D. If the area being mulched will eventually support a cover of perennial vegetation, 20-30 pounds of nitrogen per acre shall be added in addition to the normal nitrogen application rate specified in Section 02920 – Permanent (Perennial) Grassing and Landscaping.

E. Mulch can be applied to areas at rough grade. With the use of an appropriate anchoring method, mulch may be applied to areas as steep as 2:1 (H:V).

F. All mulch shall be anchored. Install commercial netting according to manufacturer's specifications.

G. Wood waste shall be anchored with netting consisting of openings no larger than the average size of the wood waste chips.

3.04 TEMPORARY GRASSING

A. Temporary grassing shall be applied in accordance with specifications set forth in Chapter 6, Section II of the "Manual for Erosion and Sediment Control in Georgia".

B. Temporary grassing can be employed instead of mulch if an area will remain undisturbed for less than six months.

C. Where staged construction or other conditions not controlled by Contractor prohibit the completion of work in a continuous manner; Engineer may order Contractor to apply temporary grassing to an erodible area.

D. Temporary grassing shall consist of sowing a quick growing species of grass suitable to the area and season. Certified temporary grass seed shall be applied at the rates and dates as indicated in the Plans

3.05 PERMANENT (PERENNIAL) GRASSING

A. See Section 02920 – Permanent (Perennial) Grassing and Landscaping.

3.06 GRADING OPERATIONS

A. Grading operations shall be scheduled so that ground surface will be disturbed for the shortest possible time before permanent construction is installed. Large areas shall be maintained as flat as possible to minimize soil transport through surface flow.

B. Wherever steeper slopes or abrupt changes in grade are required, a compacted diversion or berm shall be constructed at the top of slope to cause surface water to flow along the diversion to a control point to be transported down slope in a slope drain. In no case shall surface water be allowed to flow uncontrolled down slopes.

C. Unless otherwise approved in writing by Engineer, construction operations in rivers, streams and impoundments shall be restricted to those areas that must be entered for the construction of temporary or permanent structures, or at locations shown on the Drawings.

D. Mechanized equipment shall not be operated in live streams except as may be minimally required, unless otherwise approved in writing by Engineer.

E. Frequent fording of live streams with construction equipment shall not be permitted. Temporary bridges or other structures, designed in accordance with specifications by the “Manual for Erosion and Sediment Control in Georgia”, shall be used whenever an appreciable number of stream crossings are necessary.

3.08 DUST CONTROL

A. Dust raised from vehicular traffic shall be controlled by wetting down the access

road with water. The use of a deliquescent chemical, such as calcium chloride, may be used if the relative humidity is over 30%. Chemicals shall be applied in accordance with the manufacturer's recommendations.

3.09 CLEAN-UP AND REMOVAL

A. Temporary erosion and sediment control measures shall be removed and bare areas stabilized when all areas draining to the control(s) are no longer under construction and have reached final stabilization.

B. All sediment accumulated at erosion and sediment control structures shall be removed and properly disposed of before the structure is removed.

C. Sediment deposits shall be uniformly spread at an appropriate location and stabilized with mulch and grassing.

D. All false-work, sheeting or piling which are to be removed, debris, and other obstructions shall be promptly cleared from rivers, streams and impoundments as soon as conditions permit.

END OF SECTION

SECTION 02512
ADJUSTMENT OF VALVE BOXES TO GRADE

PART 1 – GENERAL

1.01 DESCRIPTION

A. This item shall consist of adjusting existing valve boxes to grade. Work shall include all labor, materials, and other items necessary to bring the existing valve boxes to the finished asphalt elevation.

B. Milling or reclamation around valve boxes shall be accomplished with care to prevent damage to these facilities.

PART 2 – PRODUCTS

2.01 MATERIALS

A. Valve box risers shall be class 35B, gray iron, meeting the requirements of ASTM A48-83. Standard riser sizes shall be 1”, 1 ½”, and 2”. A minimum of one new riser may be used for each valve box.

PART 3: - EXECUTION

3.01 CONSTRUCTION METHODS

A. Whenever possible, valve boxes shall be raised or lowered by digging around the valve box a sufficient distance to allow the box to be adjusted by screwing up or down to the desired final grade.

B. Where the methods described in Paragraph A above cannot be employed to raise a valve box to grade, Contractor shall install a riser below the top section of the box.

C. All valve boxes shall be adjusted to final grade prior to overlay. Overlay is to be placed flush with top and continuously without patches.

END OF SECTION

SECTION 02513
CHEMICAL FEED BUILDING PACKAGE SYSTEM ENCLOSURE

A. SCOPE

Under this heading shall be included installation of the CHEMICAL FEED BUILDING as shown on the plans and as specified herein. The Contractor shall comply with all local codes and regulations of local utilities. Contractor shall coordinate work necessary for the completion of utilities with local utility companies and cooperate with the companies as required.

The entire package system enclosure shall be mounted as a pre-cast concrete building. Building shall be of one-piece molded design and shall have a 150 miles per hour wind load and a 35 pound per square foot snow load. Building shall be manufactured by Clay-Greene Pre-Cast Manufacturing or pre-approved equal. The entire frame mounted chemical feed station shall be covered by a pre-stressed concrete enclosure.

For pricing the Chemical Feed Building please contact Chris Keever at Cornerstone via email; chris@cornerstoneh2o.com.

The chemical feed building can be erected onsite, but it must meet all criteria for the Package System Enclosure. The criteria to meet this specification shall be the burden of the Contractor to provide an engineered design solution to meet this specification.

B. CODES & STANDARDS

The building shall meet the following codes and standards:

1. ACI-318-08, "Building Code Requirements for Reinforced Concrete". Concrete Reinforcing Institute, "Manual of Standard Practice".
2. ANSI/ASCE-7-05 "Building Code Requirements for Minimum Design Loads in Buildings and Other
3. Structures". Florida Building Code – 2010
4. UL-752 Test Method Level Four (4) for Bullet Resistance certified by an Independent Structural Engineer.
5. Concrete Reinforcing Institute, "Manual of Standard Practice".
6. PCI Design Handbook – 6th Edition.
7. International Building Code – 2012.
8. National Electrical Code – 2011.
9. Manual of Steel Construction – LRFD AISC – 13th Edition.
10. Manual of Steel Construction – ASD AISC – 13th Edition.

C. DIMENSIONS

1. Shall be shown on plans.

D. DESIGN LOADS

1. Seismic load performance category 'C', Exposure Group III

2. Standard Live Roof Load - 60 PSF
3. Standard Floor Load – N/A
4. Standard Wind Loading - 150 MPH

E. ROOF

1. Roof panel shall slope 2” from center to edge. The roof shall extend a minimum of 2.5” beyond the wall panel on each side. Roof and wall panels must each be produced as single component monolithic panels. No roof or vertical wall joints will be allowed, except at corners. Wall panels shall be set on top of prepared concrete foundations.

F. MATERIALS

1. Concrete: Steel reinforced, polypropylene fiber reinforced 6000 PSI. Minimum 28 days compressive strength, air entrained (ASTM C260)
2. Reinforced Steel: ASTM A615, Grade 60 unless otherwise indicated.
3. Reinforced Fiber: Polypropylene Fiber, Fortafiber @ 1.5 pounds per cubic yard or equal.
4. Roof and wall panels must each be produced as single component monolithic panels. No roof or vertical wall joints will be allowed, except at corners. Wall panels shall be set on top of prepared concrete foundation (prepared by installation contractor).
5. Panel Connections: All panels shall be securely welded together with 1/4" thick steel brackets. Steel is to be of structural quality, hot-rolled carbon complying with ASTM A283, Grade C. Cast-in anchors used for panel connections to be Dayton-Superior #F-63, or equal.
6. Doors and Frames: The building shall be equipped with one 3’-0” x 7’-0” x 18Ga Galvanized Steel Doors and frame.
7. Door Hardware:
    i. Hinges: Stainless Steel Vandal Proof (primed with non-removable hinge pins), 3 per door.
    ii. Lock Set: Mortise Lock with 6 pin removable core.
    iii. Threshold: Aluminum threshold with neoprene seal.
    iv. Doorstop: Hydraulic Door Closer.
    v. Drip Cap: National Guard 16A
8. Caulking: All joints between panels shall be caulked on the exterior and interior surface of the joints. Caulking shall be SIKAFLEX-1A elastic sealant.

G. ELECTRICAL

1. (1) Interior 4’ LED Light Fixtures, on Switch.
2. (1) Exterior 70W HPS Light Fixture Dark Sky Compliant on Photocell.
3. (2) 120v Interior Duplex Receptacles.
4. (1) 100AMP main 120/240V power distribution panel
5. Wiring to be in Surface Mounted EMT.

H. VENTILATION & HEAT

1. Bard Model W24A1-A 2-ton HVAC unit with 24,000 BTUH cooling capacity and 17,065 BTUH heating capacity.
2. Shall be 230V/60Hz/1pH

I. FINISH

1. Interior of Building: Walls and Ceiling – Smooth Concrete Finish, Sealed with Epoxy, White.
2. Exterior of Building: Neutral Trim with Pea Gravel Exposed Aggregate Finish
3. Roof to have smooth trowel finish sealed with a liquid applied roofing system, White.

J. ENGINEERING DRAWINGS & TESTING

At a minimum package chemical feed building shall be complete with the following documentation:

1. General Arrangement Drawings- manufacturer shall be responsible for one (1) pre-submittal drawing, one (1) submittal drawing and one (1) revision of drawing at no additional charge to the owner. Drawings must be digital rendered in solidworks or equal.
2. Lifting Plan- One (1) Standard lifting plan (drawing).
3. Quality Control- Manufacturer shall comply with their standard quality control documentation.
4. Manufacturer shall provide a minimum of two (2) days of start-up and training
5. Thirty (30) month warranty from date of shipment.

K. SHOP DRAWINGS

Shop drawings shall be submitted on each manufactured item supplied under this Section along with other information as specified herein.

L. INSPECTIONS

1. Periodic inspections of the project will be performed by the City through completion to ensure that the project is constructed in accordance with the approved plans and meets the requirements set forth in this document.

M. WARRANTY

The contractor shall warranty the installation against defects due to faulty materials and/or workmanship for a period of thirty (30) months from the date of acceptance by the City. The contractor shall be responsible for repair of leaks or other failures due to materials or workmanship during the warranty period. It the City makes such repairs, the contractor shall be responsible for reimbursing the costs.

END OF SECTION

SECTION 02514
WELL HOUSE ENCLOSURES

A. SCOPE

Under this heading shall be included installation of the WELL HOUSE ENCLOSURES as shown on the plans and as specified herein. The Contractor shall comply with all local codes and regulations of local utilities. Contractor shall coordinate work necessary for the completion of utilities with local utility companies and cooperate with the companies as required.

The entire package system enclosure shall be mounted in a tilt-up fiberglass (FRP) enclosure. Enclosure shall be of the one-piece molded design with a minimum thickness of 1/8" and a minimum of 1" of polyurethane foam insulation. Shall be manufactured by Clay-Greene.

For pricing the Chemical Feed Building please contact Chris Keever at Cornerstone via email; chris@cornerstoneh2o.com.

A field erected well house building can be erected onsite, but it must meet all criteria for the Package System Enclosure. The criteria to meet this specification shall be the burden of the contractor to provide an engineered design solution to meet this specification.

At a minimum the enclosure shall be equipped with.

B. PACKAGE SYSTEM ENCLOSURE

1. Constructed with rigid thixotropic polyester resin and 30% chopped glass in 1-1/2" to 2" random patterns or 1/8" to 3/16" thick.
2. Reinforcement of outer laminate shall consist of three plies of 1.5 ounce per foot chopped strand mat.
3. The inner laminate shall consist of 2 ply of 1.5 ounce per foot chopped mat.
4. Modified polyisocyanurate rigid foam one inch thick shall be used throughout as insulation. Insulation has a K-factor of .14 BTU in/hr/ft/F degree, R-7.2 per inch rating.
5. All gel coats and surface coating are a chemical resistant neopentyl glycol based polyester resin. Pigments are selected for their long term weatherability in corrosive applications.
6. Enclosure shall be equipped with two FRP vent hoods on opposite sides.
7. Hinge shall be stainless steel with stainless steel hasp.
8. Tilt-up shall be equipped with safety chains and springs.
9. Enclosure shall be equipped with Heavy-Duty (HD) option.
10. Conduit- All conduit shall be of the flexible liquid-tight type or PVC NEC approved as manufactured by Grainger, Hubbell or equal
11. One (1) duplex GFI receptacle for heater
12. All electrical wiring shall be per NEC-70

13. One (1) FRP intake hood
14. One (1) FRP exhaust hood- fan above shall be mounted
15. One (1) FRP Heater shall be mounted for use under freezing temperatures.

C. BASEPLATE, PIPE, VALVES, & FITTINGS

Baseplate shall be computer aided designed (CAD) in Solidworks and manufactured of a minimum of 6" channel steel which shall meet or exceed A-36 requirements. The design of all members shall be in accordance with AISC Steel Construction Manual (13th Edition). Pump, piping, valves, electrical components shall be securely attached to the baseplate. Four lifting lugs shall be securely mounted to the frame to allow for movement of the system as one unit. Complete package shall be certified under UL-QCZJ. Field assembled or component build units in the field shall not be allowed or accepted.

1. Painting of baseplate, pipe, valves & fittings (where needed) shall be Clay-Greene Blue or other equal alternative. Surfaces receiving paint shall be sandblasted to a bright metal appearance per SSPC-SP6 and shall include the removal of all rust, mill scale and other foreign materials. Painting operation shall take place immediately after surface preparation. Paint shall be a two-part high solids self-priming epoxy suitable for marine applications shall be PPG Amerlok-2 or equal. A minimum of two-coats shall be applied for a final 6-12mil dry thickness.
2. Baseplate shall be designed in a manner that supports the FRP enclosure fully without deformation. Structure shall have anchor locations built into frame for mounting into customer's slab.

D. SUBMITTALS/SHOP DRAWINGS

1. Shop drawings shall be submitted on each manufactured item supplied under this Section along with other information as specified herein

END OF SECTION

SECTION 02530

SANITARY SEWER COLLECTION SYSTEM

PART 1 – GENERAL

1.01 SCOPE

A. This section of the Specifications describes products to be incorporated into the sanitary sewer and requirements for the installation and use of these items. The contractor shall furnish all products and perform all labor necessary to fulfill the requirements of these Specifications. It includes but is not limited to the construction of the following items:

1. Sewer Pipes
2. Force Main
3. Connections to Existing System
4. Fittings, Adaptors, & Couplings

1.02 RELATED WORK

A. Other work required for the construction of the sanitary sewer collection system is specified in the following of the specifications:

Section No.	Title
02315	Excavation, Trenching, and Backfill for Utility Systems
02370	Soil Erosion Control
02920	Permanent (Perennial) Grassing & Landscaping
02540	Utility Directional Drilling

1.03 REFERENCES

A. ASTM D 3740-94a – Minimum Requirements for Agencies Engaged in the Testing and/or Inspection of Soil and Rock as Used in Engineering Design and Construction.

B. ASTM E 329-93b – Agencies Engaged in the Testing and/or Inspection of Materials Used in Construction.

C. ASTM D 3034-94 – Type PSM PVC Sewer Pipe and Fittings.

D. ASTM D 2321-89 – Underground Installation of Thermoplastic Pipe for Sewers and Other Gravity-Flow Installations.

E. ANSI/AWWA C 150/A-21.50-96 – Thickness Design of Ductile Iron Pipe.

F. ANSI/AWWA C 151/A-21.51-91 – Ductile Iron Pipe, Centrifugally Cast, for Water or Other Liquids.

G. ASTM A 746-95 – Ductile Iron Gravity Sewer Pipe.

H. ASTM D 3212-92 – Joints for Drain and Sewer Plastic Pipes Using Flexible Elastomeric Seals.

I. ASTM F 477-95 – Elastomeric Seals (Gaskets) for Joining Plastic Pipe.

J. ASTM D 3139-95 – PVC Pressure-Rated Pipe (SDR-Series).

K. ASTM D 3139-95 – Joints for Plastic Pressure Pipes Using Flexible Elastomeric Seams.

L. ASTM D 139-93a – Electric-Fusion (Arc) Welded Steel Pipe (NPS 4 and over).

M. ASTM C 478-94 – Precast Reinforced Concrete Manhole Sections.

N. ASTM C 443-94 – Joints for Circular Concrete Sewer and Culvert Pipe, Using Rubber Gaskets.

O. ACI 318-89 – Building code Requirements for Reinforced Concrete.

P. ASTM C 39-94 – Compressive Strength of Cylindrical Concrete Specimens.

Q. ASTM C 890-91 – Minimum Structural Design Loading for Monolithic or Sectional Precast Concrete Water and Wastewater Structures.

R. ASTM C 891-90 – Installation of Underground Precast Concrete Utility Structures.

S. ASTM C 913-89 – Precast Concrete Water and Wastewater Structures.

T. ASTM A 615/A 615 M-95b – Deformed and Plain Billet – Steel Bars for Concrete Reinforcement.

U. ANSI/AWWA C-500-93 – Metal-Seated Gate Valves for Water Supply Service.
V. ANSI/AWWA C-509-94 – Resilient-Seated Gate Valves for Water Supply Service.

W, AASHTO T 191-91 – Density of Soil in-Place by the Sand-Cone Method.

X. ASTM D2922-91 – Test Methods for Density of Soil and Soil Aggregate in Place by Nuclear Methods (Shallow Depths).

Y. ASTM D1557-91 – Laboratory Compaction Characteristics of Soil Using Modified Effort.

Z. ASTM D1556-90 – Density and Unit Weight of Soil in Place by the Sand Cone Method.

AA. ASTM D714-87 (Re-approved 1994) – Evaluation Degree of Blistering Paints.

BB. ASTM D2794-93 – Resistance of organic Coatings to the Effects of Rapid Deformation (Impact).

CC. ASTM E96-95 – Water Vapor Transmission of Materials.

DD. ANSI/AWWA C111/A21.11-95 – Rubber Gasket Joints for Ductile Iron Pressure Pipe and Fittings.

EE. ASTM A377-95 – Index and Specifications for Ductile Iron pressure Pipe and Fittings.

FF. ANSI/AWWA C600-93 – Installation of Ductile Iron Water Mains and their appurtenances.

GG. ASTM C890-73 (Latest Revision) – Standard Practice for Minimum Structural Design Loading for Monolithic or Sectional Precast Concrete for Water and Wastewater Structures.

HH. ASTM C891-78 (Latest Revision) – Standard Practice for Installation of Underground Precast concrete Utility Structures.

II. ASTM C913-79 (Latest Revision) – Precast Concrete Water and Wastewater Structures.

JJ. 1990 Edition of the Recommended Standards for Wastewater Facilities, Great Lakes – Upper Mississippi River Board of State Public Health and Environmental Manages, Section 38.31.

KK. ASTM C969 (Latest Revision) – Standard Practice for Infiltration and Exfiltration Acceptance Testing of Installed Precast Concrete Pipe Sewer Lines.

LL. ASTM F1417 (Latest Revision) – Standard Test Method for Installation Acceptance of Plastic Gravity Sewer Lines Using Low Pressure Air

MM. ASTM C1244 (Latest Revision) – Standard Test Method for Concrete Sewer Manholes by the Negative Air Pressure (Vacuum) Test Prior to Backfill.

1.04 OPTIONS

A. The Contractor will furnish the Engineer and the Owner a description of all materials before ordering. The Engineer will review the Contractor's submittals and provide in writing an acceptance or rejection of material. However, an acceptance of any material by the Engineer does not relieve the Contractor of this responsibility to meet the requirements of the construction plans or these specifications.

1.05 QUALITY ASSURANCE

A. Material and equipment shall be the standard product of a manufacturer who has manufactured them for a minimum of 2 years and who provides published data on the quality and performance of the project.

B. A Subcontractor for any part of the work must have experience on similar work and if required, furnish the Engineer with a list of projects and the Owners or Engineers who are familiar with his competence.

C. Devices, equipment, structures, and systems not designed by the Engineer that the Contractor wishes to furnish shall be designed either by a registered professional engineer or by someone the Engineer approved as qualified. If required, complete design calculations and assumptions shall be furnished to the Engineer or the Owner before acceptance.

D. All testing of the piping shall be made by the Contractor with equipment qualified by the Owner, Engineer, or utility company and in the presence of the Engineer, Owner and utility company. The Engineer or his representative reserves the right to accept or reject testing equipment.

E. Soil testing shall be done by a testing laboratory regularly engaged in soil testing and shall be approved by the Engineer prior to engagement. Mill certificates of test on materials made by manufacturers will be accepted provided the manufacturer maintains an adequate testing laboratory, make regularly scheduled tests that are spot checked by an outside laboratory, and furnishes satisfactory certificates with the name of the one making the test.

F. The details of all welded joints shall comply with all of the requirements for joints, which are accepted without qualification test under the "Code of Arc and Gas Welding in Building Construction of the American Welding Society".

Workmanship shall conform to A.I.S.C. Specifications for Fabrication and Erection. All work shall be executed by skilled workmen under experienced supervision. All welding shall be done by welders who have been previously qualified by tests as prescribed in the "American Welding Society Standard Qualification Procedure" to perform the type of work required. Welders shall have passed the qualification test (Qualification tests using procedures covered in AWSS B3.0 Part II) within the preceding 12 months.

1.06 ALTERNATES

A. The intention of these specifications is to produce the best system for the Owner. If the Contractor suggests that alternate material, equipment or procedures will improve the results at no additional costs, the Engineer and the Owner will examine the suggestion and, if accepted, it may be used. The basis upon which acceptance of an alternate will be given is its value to the Owner, and not for the convenience of the Contractor.

1.07 GUARANTEE

A. The contractor shall guarantee the quality of the materials, equipment, and workmanship for 12 months after acceptance of the completed Project. Defects discovered during that period shall be repaired by the Contractor, at no cost to the Owner. The Performance bond shall reflect this guarantee.

B. The manufacturers of equipment, valves, pumps, controls, measuring devices and special equipment shall test the equipment shall test the equipment at field conditions for compliance with the specifications. The manufacturer shall guarantee his product to be free from defects in material and factory workmanship for a period of 1 year from date of acceptance of the completed project, provided the product is properly installed, serviced and operated under normal conditions according to the manufacturer's instructions. The manufacturer shall furnish the service of a representative of the Engineer with a certificate that the equipment meets the specifications and will perform as required. The manufacturer shall furnish four field trips to the plant by a service representative during the first year after completion of the Project at no cost to the Owner.

1.08 EXISTING UTILTIES

A. All known utility facilities are shown schematically on the Plans and are not necessarily accurate in location as to plan or elevation. Utilities such as service lines or unknown facilities not shown on plans will not relieve the contractor of his responsibility under this requirement. "Existing Utility Facilities" means any utility that exists on the project in its original, relocated, or newly installed

position. The Contractor will be held responsible for the cost of repairs to damaged underground facilities: even when such facilities are shown on the plans. The Contractor shall contact all utility companies prior to beginning work and request an accurate field location of their respective utility lines.

B. Damage to any part of the existing water system facilities by the Contractor or Subcontractors, that is required by the user's and Owner's forces, shall be charged to the Contractor on the basis of time and material, plus 30% for overhead and administration.

1.09 ACCEPTANCE OF PORTIONS OF WORK

A. The Owner reserves the right to accept and use any portion of the work whenever it is considered in the public interest to do so.

1.10 RECORD DATA

A. It will be required of the Contractor to keep accurate, legible records of the location of any deviations from the construction drawings, as well as any additional items or structures added to the construction drawings. These records will be made available to the Engineer before his inspection for incorporation into the Engineer's Record Drawings.

PART 2 – PRODUCTS

Products and materials used in the work shall conform to the following:

2.01 SANITARY SEWER PIPE (GRAVITY SEWER)

A. Ductile Iron Pipe – Shall conform to ANSI A21.50 (AWWA C-150) latest revision, ANSI A21.51 (AWWA C-151) latest revision, and ASTM A746. All pipe, except specials, shall be furnished in nominal lengths of 18 or 20 feet. All ductile iron pipes and fittings shall be bituminous coated on the outside and lined with Tnemec 431 on the inside. The size of the pipe shall be as indicated on the drawings. All pipe shall have a Pressure Class 350 pressure rating.

1. Coating on the outside shall be an asphaltic coating approximately 1 mil thick. The finished coating shall be continuous, smooth, neither brittle when cold or sticky when exposed to the sun and shall be strongly adherent to the iron.

2. Tnemec Series 431 Polyamine Ceramic Epoxy is a two component, modified polyamine ceramic epoxy formulated for corrosion control and shall conform to the following:

   a. Solids by Volume: 100%

   b. Hazard Air Pollutants: Zero

   c. Ceramic Hollow Microspheres: 20 % by volume (no silica fume, fly ash, or alumina dust)

   d. Pigment volume concentration: less than 22%

   e. Coal-Tar Content: Zero

   f. Color- Sewer Pipe Green

   g. Dry Film Thickness- 40 mils.

B. Polyvinyl Chloride (PVC) Pipe – Gravity sewer pipe installed via open-cut shall be unplasticized polyvinyl chloride with integral wall bell and spigot joints with a rubber ring gasket. Pipe and fittings shall meet the requirements of ASTM D3034 and be SDR 26 (PS115) for use as a gravity sewer conduit. All pipe shall be installed in accordance with ASTM D2321, with additional bedding as required in these specifications or project details. Sizes and dimensions shall be as shown in the following table:

	Outside Diameter (in.)		Minimum Wall
Nominal Size	Average	Tolerance	Thickness (in.)
8”	8.400	±0.010	0.323
10”	10.500	±0.013	0.404
12”	12.500	±0.016	0.481
15”	15.300	±0.017	0.588
18”	18.701	±0.019	0.720
21”	22.047	±0.021	0.849
24”	24.803	±0.022	0.956
27”	27.953	±0.023	1.077
30”	32.000	±0.025	1.233
36”	38.300	±0.026	1.475
42”	44.500	±0.027	1.714
48”	50.800	±0.028	1.957

1. Minimum pipe stiffness (F/Y) at 5% deflection shall be 115 psi for all sizes when tested in accordance with ASTM D2412.

2. PVC gravity sewer pipe shall be supplied in lengths no longer than 14 feet.

3. Each length of pipe shall be marked with the manufacturer's name, trade name, nominal size, class, hydrostatic test pressure, manufacturer's standard symbol to signify it was tested, and date of manufacture. Each rubber ring shall be marked with the manufacturer's identification, the size, the year of manufacture, and the classes of pipe with which it can be used.

2.02 PIPE JOINTS (GRAVITY SEWER)

A. Ductile Iron Pipe (D.I.) – Shall be flexible rubber gasket Type II, or mechanical joint Type III, conforming to ASA Specification A21.11.

B. Polyvinyl Chloride (PVC) Pipe – Shall be flexible gasket joints for PVC sewer pipe and shall be compression type conforming to ASTM D-3212. The gasket shall conform to ASTM F-477.

C. Transition Joints – The transition between sewer pipes of different materials shall be made by either concrete collar or by special adapters made for that purpose. Adapters between cast iron pipe and pipes of other materials will be accepted upon approval by the Engineer. In cases where special adapters are not available or not approved by the Engineer, concrete collars will be used.

2.03 MANHOLES

A. Precast Concrete Manholes – shall be precast reinforced concrete manholes that meet the requirements of ASTM C478 and the details contained in the project drawings. The minimum compressive strength of the concrete in precast sections shall be 4000 psi.

1. Joints – shall be tongue and groove sealed with flexible gaskets or mastic sealant. Gaskets shall be O-Ring or Type A or B "Tylox" equivalent to ASTM C443; mastic shall be "Ram-nek" with primer. The "Ram-nek" primer shall be applied to all contact surfaces of the manhole joint at the factory in accordance with the manufacturer's instructions.

2. Manhole Boots – Provide Neoprene boot seal where sewer enters the manhole. Holes for pipes entering and leaving the manholes shall be core-drilled at the plant location or in the field.

B. Frames and Covers – Cast iron manhole frames and covers shall meet the requirements of ASTM A48 for Class 30 gray iron and all applicable local standards. All castings shall be tough, close grained, smooth and free from blow holes, blisters, shrinkage, strains, cracks, cold shots and other imperfections. No casting will be accepted which weighs less than 95 percent of the design weight. Shop drawings must indicate the design weight and provide sufficient dimensions to permit checking. All frames and covers shall be rated for H-20/HS-20 loading where called for on the Plans. All castings shall be thoroughly cleaned in the shop and given two coats of approved bituminous paint before rusting begins.

1. Manhole frames and covers shall be as shown on the Standard Detail Drawings.

2. All frames and covers shall have machined horizontal bearing surfaces.

3. All manholes shall have standard frames and covers except where specifically shown otherwise on the Drawings.

C. Pipe Connections – Shall have flexible watertight joints at the point of entry of any sewer main into the manhole. The joint shall be wedged rubber shape equivalent to “Press Wedge II,” or a rubber sleeve equivalent to “Kor-N-Seal” or “Lock-Joint.”

D. Drop Manhole – When incoming sewer pipes are more than two feet above the invert of the manhole that they are entering, a drop manhole must be provided.

2.04 FORCE MAIN

A. Polyvinyl Chloride (PVC) Pipe – Pipe 12” and smaller shall conform to AWWA C900 DR25, and pipe larger than 12” shall conform to AWWA C905 DR18. Pipe shall be made of compounds conforming to ASTM D1784 with a cell classification of 12454. Integral bells shall incorporate gaskets meeting the requirements of ASTM F477 and be locked into the bell. The assembled joint shall meet the requirements of ASTM D3139. The nominal laying length of the pipe shall be 20 feet.

B. Ductile Iron Pipe (D.I.) – Shall conform to ANSI A21.50 (AWWA C-150) latest revision, ANSI A21.51 (AWWA C-151) latest revision, and ASTM A746. All pipe, except specials, shall be furnished in nominal lengths of 18 to 20 feet. All ductile iron pipes and fittings shall be bituminous coated on the outside and shall have the interior lined with Tnemec 431 or approved equal. The size of the pipe shall

be as indicated on the drawings. Ductile iron piping shall be Class 350 for 12" and under, Class 250 for 14" to 20", and Class 200 for 24" and above.

1. Coating on the outside shall be an asphaltic coating approximately 1 mil thick. The finished coating shall be continuous, smooth, neither brittle when cold or sticky when exposed to the sun and shall be strongly adherent to the iron.

2. Tnemec Series 431 Polyamine Ceramic Epoxy is a two component, modified polyamine ceramic epoxy formulated for corrosion control and shall conform to the following:

   a. Solids by Volume: 100%

   b. Hazard Air Pollutants: Zero

   c. Ceramic Hollow Microspheres: 20 % by volume (no silica fume, fly ash, or alumina dust)

   d. Pigment volume concentration: less than 22%

   e. Coal-Tar Content: Zero

   f. Color- Sewer Pipe Green

   g. Dry Film Thickness- 40 mils.

C. HDPE Pipe

1. <u>Force main pipe shall be 16" DR17 IPS HDPE (125 psi) unless otherwise noted on the Plans.</u>

2. Method of Pipe Delivery – Piping shall be delivered to the job site in 20 or 40 linear foot sections for pipe greater than or equal to 5" diameter (nominal) and shall be delivered and installed from spools for pipe less than or equal to 4" in diameter (nominal).

3. Manufacturers:
   Manufacturers that are qualified and approved by the Engineer are listed below. Products from unapproved manufacturers are prohibited.

   ISCO Industries, LLC
   Performance Pipe, Inc.

JM Eagle

Materials used for the manufacture of polyethylene pipe and fittings shall be PE4710 high density polyethylene meeting cell classification 445574C per ASTM D 3350; and shall be listed in the name of the pipe and fitting Manufacturer in PPI1 TR-4, Recommended Hydrostatic Strengths and Design Stresses for Thermoplastic Pipe and Fittings Compounds, with a standard grade rating of 1600 psi at 73°F. The Manufacturer shall certify that the materials used to manufacture pipe and fittings meet these requirements.

4. Interchangeability of Pipe and Fittings: Polyethylene pipe and fittings shall be produced by the same Approved Manufacturer. Products made by sub-contractors or Manufacturer's distributor are not acceptable. Pipe and fittings from different Approved Manufacturers shall not be interchanged.

5. Polyethylene Pipe

   Polyethylene pipe shall be manufactured in accordance with ASTM D3035, Polyethylene (PE) Plastic Pipe and shall be so marked. Each production lot of pipe shall be tested for (from material or pipe) melt index, density, % carbon, (from pipe) dimensions and either quick burst or ring tensile strength (equipment permitting).

6. Service Identification Stripes

   Permanent identification of piping service shall be provided by co-extending four equally spaced color stripes into the pipe outside surface. The striping material shall be the same as the pipe material except for color. The following colors shall be used to identify piping service:

   Green stripes – sanitary sewer and force mains

   Stripes printed on the pipe outside surface shall not be acceptable.

7. Polyethylene Fittings & Custom Fabrications

   Polyethylene fittings and custom fabrications shall be molded or fabricated by the pipe manufacturer. Butt fusion outlets shall be made to the same outside diameter, wall thickness, and tolerances as the mating pipe. All fittings and custom fabrications shall be fully rated for the same internal pressure as the mating pipe. Pressure de-rated fabricated fittings are prohibited.

8. Molded Fittings

Molded fittings shall be manufactured in accordance with ASTM D3261, Butt Heat Fusion Polyethylene (PE) Plastic Fittings for Polyethylene (PE) Plastic Pipe and Tubing and shall be so marked. Each production lot of molded fittings shall be subjected to the tests required under ASTM D3261.

9. X-Ray Inspection

   The Manufacturer shall submit samples from each molded fittings production lot to x-ray inspection for voids and shall certify that voids were not found.

10. Fabricated Fittings

    Fabricated fittings shall be made by heat fusion joining specially machined shapes cut from pipe, polyethylene sheet stock, or molded fittings. Fabricated fittings shall be rated for internal pressure service equivalent to the full-service pressure rating of the mating pipe. Directional fittings 16" IPS and larger such as elbows, tees, crosses, etc., shall have a plain end inlet for butt fusion and flanged directional outlets. Part drawings shall be submitted for the approval of the Project Engineer.

11. Polyethylene Flange Adapters

    Flange adapters shall be made with sufficient through-bore length to be clamped in a butt fusion joining machine without the use of a stub-end holder. The sealing surface of the flange adapter shall be machined with a series of small v-shaped grooves to provide gasketless sealing, or to restrain the gasket against blow-out. Flanged transitions are acceptable only for above-ground connection.

12. Backing Rings & Flange Bolts

    Flange adapters shall be fitted with lap joint flanges pressure rated equal to or greater than the mating pipe. The lap joint flange bore shall be chamfered or radiused to provide clearance to the flange adapter radius. Flange bolts and nuts shall be Grade 2 or higher. Flanged transitions are acceptable only for above-ground connection.

13. HDPE Adapters for Buried Transitions

    Buried HDPE pipe to be connected to mechanical joint, bell-type joint or restrained joint pipe shall be provided at all transitions from HDPE pipe to non-HDPE pipe. Such restrained transitions shall include clamps, adapter

kits, and other manufacturer approved restraint items so that the connection is fully restrained. The transitions shall have stiffeners, shall be compatible with the pipe to be connected and shall be butt-fused to the HDPE pipe to be so connected.

D. Fittings for PVC and D.I. Pipe – All fitting shall be ductile iron, compact in weight and size, with restrained joints meeting the requirements of AWWA C110/ANSI A21.10, or AWWA C153/ANSI A21.4, and with a minimum rated working pressure of 250 psi. Fittings shall be mechanical joint and have a nominal wall thickness of Class 54 Ductile Iron Pipe. They shall be furnished with a bituminous outside coating and lined with Tnemec 431 Ceramic Epoxy or equal. The color of finish coat shall be sewer pipe green to match pipe. Special adapters shall be provided, as recommended by the manufacturer, to adapt the PVC pipe to mechanical jointing with cast or ductile iron pipe, fittings or valves.

E. Fittings for HDPE Pipe – All fittings shall be butt-fused as described above.

F. Thrust Blocking – Concrete having compressive strength of not less than 3000 psi shall be used as a cradle or thrust blocking where shown on the plans or where directed by the Engineer. Bends exceeding 22-1/4 degrees, crosses with one opening plugged, and all tees shall be backed with concrete as a thrust block. Blocking shall be placed between solid ground and the fitting to be anchored; the area of bearing on the pipe and on ground in each instance shall be that shown on the plans. The blocking shall be so placed that the pipe fitting joints will be accessible for repair. No extra payment will be made for the thrust blocks.

2.04 EXPANSION JOINTS

A. Expansion joints shall be manufactured of molded neoprene with filled triple arches. Joints shall be reinforced with galvanized 3/8-inch split steel retaining rings placed directly against the inside of the flanged to prevent damage to the rubber surface when the bolts are tightened. Expansion joints shall be suitable for buried service or above ground service. Flanges shall be drilled to ANSI 125#. Working pressures are as follows:

Size	Pressure
1"-4"	165#
5"-12"	140#
14"	85#
16"-24"	65#
26"-66"	55#

B. Maximum temperature shall be 180 degrees F and shall be capable of a maximum 1-1/2-inch lateral movement. Expansion joints shall be Model J-l as manufactured by the Red Valve Company or an approved equal.

2.05 FLANGED ADAPTORS

A. Flanged adaptors shown on the Drawings shall be "Uni-Flange" as manufactured by Uni-Flange Corporation, Series 400.

B. Flange shall be ductile iron designed to meet the requirements of ANSI D16. Set screw shall be AISI 4140 steel, heat treated, zinc

C. Where shown on the Drawings adaptor shall be harnessed.

2.06 FLEXIBLE COUPLINGS

A. Flexible couplings shall be either the split type or the sleeve Type as shown on The Drawings.

1. Split type coupling shall be used with all interior piping and with exterior piping as noted on the Drawings. The couplings shall be mechanical type for radius groove piping. The couplings shall mechanically engage and lock grooved pipe ends in a positive couple and allow for angular deflection and contraction and expansion.

2. Couplings shall consist of malleable iron, ASTM Specification A47, Grade 32510 housing clamps in two or more parts, a single chlorinated butyl composition sealing gasket with a "C" shaped cross-section and internal sealing lips projecting diagonally inward, and two or more oval track head type bolts with hexagonal heavy nuts conforming to ASTM Specification A183 and A194 to assemble the housing clamps. Bolts and nuts shall be hot dipped galvanized after fabrication.

3. Victaulic type couplings and fittings may be used in lieu of flanged joints if approved by the Engineer. Pipes shall be radius grooved as specified for use with the Victaulic couplings. Flanged adapter connections at fittings, valves, and equipment shall be Victaulic Vic Flange Style 741, equal by Gustin-Bacon Group, Division of Certain-Teed Products, Kansas City, Kansas, or equal.

4. Sleeve type couplings shall be used where shown on the Drawings. The couplings shall be of steel and shall be Dresser Style 38, Smith Blair Style 413, Baker Allsteel, or equal. The coupling shall be provided with hot dipped galvanized steel bolts and nuts unless indicated otherwise.

5. All couplings shall be furnished with the pipe stop removed.

6. Couplings shall be provided with gaskets of a composition suitable for exposure to the liquid within the pipe.

7. If the Contractor decides to use victaulic couplings in lieu of flanged joints, he shall be responsible for supplying supports for the joints.

2.07 FLEXIBLE CONNECTORS

A. Flexible connectors shall be constructed of bronze hose and braid with female copper tube sweat fittings brazed on each end. Connectors shall be Style BF as manufactured by Vibration Mountings and Controls, Inc., Butler, N.Y., equal by American, Waterbury, Conn., or equal.

2.08 PIPE SLEEVE SEALS

A. A watertight seal at all wall sleeves shall be obtained using expandable rubber seal rings equal to Link-Seal as shown on the Drawings. These seal rings shall be the modular mechanical type consisting of synthetic rubber links shaped to continuously fill the annual space between the pipe and wall sleeve. Links shall be loosely assembled with bolts to form a continuous rubber belt around the pipe with a pressure plate under each bolt head and nut. After the seal assembly is positioned in the sleeve, tightening of the bolts shall cause the rubber sealing sleeve. The watertight seal shall be effective against a hydrostatic head of at least 40 feet. The seal shall also be constructed so as to provide electrical insulation between the pipe and wall, thus reducing the chances of cathodic reaction between these two members.

B. Mechanical seals as described above shall be provided with 316 S.S. nuts, bolts and washers.

C. Annulus shall be grouted on both sides after installation with hydraulic cement.

2.09 TEES

A. Tees shall be 4-inches and the same diameter as the run of the pipe. They shall be of the same material as the sewer main.

2.10 LATERALS

A. Shall be Ductile Iron Pipe conforming to paragraph 2.1-B, with push-on joints or Polyvinyl Chloride pipe with bells and natural rubber rings for jointing, conforming, to Paragraph 2.1-A, PVC Pipe.

2.11 STONE BACKFILL

A. Shall be graded crushed granite with the following gradation:

Square Opening Size	Percent Passing
1”	100%
3/4”	90 to 100%
3/8”	0 to 65%
No. 4	0 to 25%

2.12 SAND BACKFILL

A. Shall be clean sand free of clay and organic material. Not more than 10% shall pass the No. 100 sieve.

2.13 BORROW

A. Where it is determined that sufficient suitable material is not available from the site to satisfactorily backfill the pipe to at least 2 feet above the top of the pipe, the Contractor shall furnish suitable sandy borrow material to accomplish the requirements. The materials shall have not more than 60% passing the No. 100 sieve, nor more than 20% passing the No. 200 sieve.

2.14 UNSUITABLE EXCAVATED MATERIAL

A. All unsuitable excavated material must be properly disposed of in a manner acceptable to the Public Works Department and in a manner that will not adversely affect the environment.

2.16 DETECTION WIRE

A. Detection Wire shall be #14 gauge insulated single strand copper wire.

2.17 STEEL CASING

A. Casing for Pipe Greater than 3 inches in diameter:

1. The casing shall be new and unused pipe. The casing shall be made from steel plate having a minimum yield strength of 35,000 psi. The steel plate shall also meet the chemical requirements of ASTM A 36.

2. The thickness of casing shown in paragraph B below are minimum thicknesses. Actual thicknesses shall be determined by the casing installer, based on evaluation of the required forces to be exerted on the casing when jacking. Any buckling of the casing due to jacking forces shall be repaired at no additional cost to the Owner.

3. The diameters of casing shown in Paragraph B below and shown on the drawings are minimum. Larger casings, with the Owner's approval, may be provided at no additional cost to the Owner, for whatever reasons the Contractor may decide, whether casing size availability, line and grade tolerances, soil conditions, etc.

4. Casing Sizes:

Pipe Diameter (inches)	Casing Diameter (inches)	Wall Thickness (inches)
4	10	0.188
6	12	0.188
8	16	0.281
10	20	0.281
12	20	0.344
14	24	0.344
16	24	0.375
18	30	0.469
24	36	0.531

B. Casing for pipe less than or equal to 3 inches in diameter: Casing shall be polyvinyl chloride pipe with a minimum wall thickness equal to Schedule 80.

C. Casing Spacers: Casing spacers shall meet one of the followings requirements:

1. Casing spacers shall be flanged, bolt-on style with a two-section stainless steel shell lined with a PVC liner, minimum 0.09-inch thick also having a hardness of 85-90 durometer. Runners shall be attached to stainless steel risers which shall be properly welded to the shell. The height of the runners and risers shall be manufactured such that the pipe does not float within the casing. Casing spacers shall be Cascade waterworks Manufacturing Company or Advanced Products & Systems, Inc.

2. Casing spacers shall be a two-section, flanged, bolted on style constructed of heat fused PVC coated steel, minimum 14-gauge band and 10-gauge risers, with 2-inch-wide glass reinforced polyester insulating skids, heavy-duty PVC inner liner, minimum 0.09-inch thick having a hardness of 85-90 durometer, and all stainless steel or cadmium plated hardware shall be Pipeline Seal and Insulator, Inc.

D. Carrier Pipe: Carrier pipe shall meet requirements as specified in these Specifications.

PART 3 – EXECUTION

3.01 ON-SITE OBSERVATION

A. The Engineer shall have the right to require that any portion of the work be done in his presence and if any work is covered up after such instruction, it shall be exposed by the Contractor for observation. However, if the Contractor notifies the Engineer that such work is scheduled and the Engineer fails to appear within 48 hours, the Contractor may proceed without him. All work done and materials furnished shall be subject to review by the Engineer or Project Representative. All improper work shall be reconstructed and all materials which do not conform to the requirements of the specifications shall be removed from the work upon notice being received from the Engineer for the rejection of such materials. The Engineer shall have the right to mark rejected materials so as to distinguish them as such.

3.02 HANDLING MATERIALS

A. Unloading: Furnish equipment and facilities for unloading, handling, distributing and storing pipe, fittings, valves, and accessories. Make equipment available at all times for use in unloading. Any cracked or damaged materials cannot be used and must be properly discarded.

B. Handling: Handle pipe, fittings, valves and accessories carefully to prevent shock or damage. Handle pipe by rolling on skids, forklift, or front loader. Do not use material damaged in handling.

C. Distribution: Distribute and place pipe and materials to not interfere with traffic. Do not string pipe more than 300 feet beyond the area where pipe is being laid. Do not obstruct drainage ditches.

D. Storage: Store all pipe which cannot be distributed along the route. Make arrangements for the use of suitable storage areas. Do not interfere with other contractors' right to access.

3.03 CONSTRUCTION ALONG HIGHWAYS, STREETS AND ROADWAYS

Install pipelines and accessories along highway, streets and roadways in accordance with the applicable regulations of the County, City and/or the Department of Transportation with reference to construction operations, safety, traffic control, road maintenance and repair.

A. Protection of Traffic: Provide and maintain suitable signs, barricades and lights for protection of traffic.
Replace all highway signs removed for construction as soon as possible. Do not close or block any highway, street, or roadway without first obtaining permission from the proper authorities.

Provide flagmen to direct and expedite the flow of traffic.

B. Construction Operations: Perform all work along highways, streets and roadways to least interfere with traffic.

1. Stripping: Where the pipeline is laid along road shoulders, strip and stockpile all sod, topsoil and other material suitable for shoulder restoration.

2. Trenching, Laying and Backfilling: Do not open the trench any further ahead of pipe laying operations than is necessary. Backfill and remove excess material immediately behind laying operations. Complete excavation and backfill for any portion of the trench in the same day.

3. Shaping: Reshape damaged slopes, side ditches, and ditch lines immediately after completing backfilling operations. Replace topsoil, sod, and any other materials removed from shoulders.

C. Excavated Materials: Do not place excavated material along highways, streets, and roadways in a manner which obstructs traffic. Sweep all scattered excavated materials off the pavements.

D. Drainage Structures: Keep all side ditches, culverts, cross drains, and other drainage structures clear of excavated material and free to drain at all times.

E. Maintaining Highways, Streets, Roadways, and Driveways: Maintain streets, highways, and roadways in suitable condition for movement of traffic until

completion and final acceptance of the work. Use steel running plate to maintain traffic until pavement is completed.

3.04 EXISTING UNDERGROUND UTILITIES AND OBSTRUCTIONS

A. It is the responsibility of the Contractor to locate all existing utilities along the path of his construction. The drawings shall indicate underground utilities or obstructions that are known to exist. Where these or unforeseen underground utilities are encountered, the location and alignment of the watermain may be changed, upon written approval of the Engineer and Owner, to avoid interference.

3.05 CONNECTIONS TO EXISTING PIPELINES

A. Before laying pipe, the Contractor shall locate the points of connection to existing pipelines and uncover as necessary for the Engineer and Owner to confirm the nature of the connections to be made. The Contractor shall furnish materials and make the connection to all existing pipelines. The Contractor will be observed during construction of tie-ins by the Owner and the Engineer. The Contractor shall use all available practices and resources to minimize the time the customers are without water.

3.06 PIPE DISTRIBUTION

A. Pipe shall be distributed and placed in such a manner that will not interfere with traffic.

B. No pipe shall be strung further along the route than 1,000 feet beyond the area in which the Contractor is actually working without written permission from the Owner and/or Engineer. The Owner and/or Engineer reserves the right to reduce this distance to a maximum distance of 200 feet in residential and commercial areas based on the effects of the distribution to the adjacent property owners.

C. No street or roadway may be closed for unloading of pipe without first obtaining permission from the proper authorities. The Contractor shall furnish and maintain proper warning signs and obstruction lights for the protection of traffic along highways, streets and roadways upon which pipe is distributed.

D. No distributed pipe shall be placed inside drainage ditches.

E. Distributed pipe shall be placed as far as possible from the roadway pavement, but no closer than five feet from the roadway pavement, as measured edge-to-edge.

F. Contractor shall not excavate sanitary sewer trenches more than 400 feet in advance of pipe laying.

G. Pipe distribution shall in no way, and shall under no circumstances, disturb wetlands (see Plans for Wetland Delineations).

3.07 LOCATION AND GRADE

A. The Drawings show the alignment and grade of the gravity sewer and the position of manholes and other appurtenances. The slope shown on the gravity sewer profile and/or called for in the Specifications is the slope of the invert of the pipe.

B. After the Contractor locates and marks the manhole centerlines or baselines of the gravity sewer, the Contractor shall perform clearing and grubbing.

3.08 LAYING AND JOINTING PIPE AND ACCESSORIES

A. Lay all pipe and fittings to accurately conform to the lines and grades established by the construction drawings.

B. Pipe Installation:

1. Proper implements, tools and facilities shall be provided for the safe performance of the Work. All pipe, fittings and valves shall be lowered carefully into the trench by means of slings, ropes or other suitable tools or equipment in such a manner as to prevent damage to sewer materials and protective coatings and linings. Under no circumstances shall sewer materials be dropped or dumped into the trench.

2. All pipe, fittings, valves, and other appurtenances shall be examined carefully for damage and other defects immediately before installation. Defective materials shall be marked and held for inspection by the Owner and/or Engineer, who may prescribe corrective repairs or reject the materials.

3. All lumps, blisters, and excess coating shall be removed form the socket and plain ends of each pipe, and the outside of the plain end and the inside of the bell shall be wiped clean and dry and free from dirt, sand,

grit or any foreign materials before the pipe is laid. No pipe which contains dirt shall be laid.

4. Foreign material shall be prevented from entering the pipe while it is being placed in the trench. No debris, tools, clothing or other materials shall be placed in the pipe at any time.

5. As each length of pipe is placed in the trench, the joint shall be assembled and the pipe brought to correct line and grade. The pipe shall be secured in place with approved backfill material.

6. It is common practice to lay pipe with the bells facing the direction in which work is progressing.

7. Applying pressure to the top of the pipe, such as with a backhoe bucket, to lower the pipe to the proper elevation or grade shall not be permitted.

8. Polyethylene Encasement: Installation shall be in accordance with AWWA C105 and the manufacturer's instructions. All ends shall be securely closed with tape and all damaged areas shall be completely repaired to the satisfaction of the Owner and/or Engineer.

C. Alignment and Gradient:

1. Lay pipe straight in alignment and gradient or follow true curves, where shown on the Drawings, as nearly as practicable. Do not deflect any joint more than the maximum deflection recommended by the manufacturer.

2. Maintain a transit, level and accessories on the job to lay out angles and ensure that deflection allowance are not exceeded.

3. The Contractor shall check the invert elevation at each manhole and the gravity sewer invert elevation at least three times daily, start, mid-day and end of day. Elevations shall be checked more frequently if more than 100 feet of pipe is installed in a day or if the gravity sewer is being constructed at minimum slope.

4. The Contractor shall check the horizontal alignment of the gravity sewer at the same schedule as for invert elevations.

5. Should any installed pipe have its alignment, grade, or joints disturbed after placement, it shall be taken up and re-laid.

D. Expediting of Work: Excavate, lay the pipe, and backfill as closely together as possible. Do not leave unjointed pipe in the trench overnight. Backfill and compact the trench as soon as possible after laying and jointing is completed. Cover the exposed end of the installed pipe each day at the close of work and at all other times when work is not in progress. If necessary to backfill over the end of an uncompleted pipe or accessory, close the end with a suitable plug, either push-on, mechanical joint, restrained joint or as approved by the Owner and/or Engineer.

E. Joint Assembly:

1. Push-on, mechanical, flange and restrained type joints shall be assembled in accordance with the manufacturer's recommendations.

2. Each restrained joint shall be inspected by the Contractor to insure that it has been "homed" 100%.

F. Cutting Pipe:

1. Cut ductile iron pipe using an abrasive wheel saw.

2. Cut PVC pipe using a suitable saw.

3. Remove all burrs and smooth the end before jointing.

4. The Contractor shall cut the pipe and bevel the end, as necessary, to provide the correct length of pipe necessary for installing the fittings, valves, accessories and closure pieces in the correct location. Only push-on or mechanical joint pipe shall be cut.

G. House Connections: Install wyes or tees in locations designated by the Owner and/or Engineer for future connection of service lines. Plug the branch of the wye or tee. Record the location of fittings installed on the Record Drawings.

H. Valve, Fitting and Pressure Gauge Installation:

1. Prior to installation, valves shall be inspected for direction of opening, number of turns to open, freedom of operation, tightness of pressure-containing bolting and test plugs, cleanliness of valve ports and especially seating surfaces, handling damage and cracks. Defective valves shall be corrected or held for inspection by the Owner and/or Engineer. Valves shall be closed before being installed.

2. Valves, fittings, plugs and caps shall be set and joined to the pipe in the manner specified in this Section for cleaning, laying and joining pipe,

except that 12-inch and larger valves shall be provided with special support, such as treated timbers, crushed stone, concrete pads or a sufficiently tamped trench bottom so that the pipe will not be required to support the weight of the valve.

3. A valve box shall be provided on each underground valve. They shall be carefully set, centered exactly over the operating nut and truly plumbed. The valve box shall not transmit shock or stress to the valve. The bottom flange of the lower belled portion of the box shall be placed below the valve operating nut. This flange shall be set on brick, so arranged that the weight of the valve box and superimposed loads will bear on the base and not on the valve or pipe. Extension stems shall be installed where depth of bury places the operating nut in excess of 30-inches beneath finished grade so as to set the top of the operating nut 30-inches below finished grade. The valve box cover shall be flush with the surface of the finished area or such other level as directed by the Owner and/or Engineer.

4. In no case shall valves be used to bring misaligned pipe into alignment during installation. Pipe shall be supported in such a manner as to prevent stress on the valve.

3.09 SEPARATION BETWEEN WATER & SANITARY SEWER

A. Parallel separation shall be 10 feet horizontal between sanitary sewers and any existing or proposed water mains. Deviation may be authorized for closer installation provided that the sewer is laid in a separate trench such that the bottom of the water main is at least 18 inches above the top of the sewer. Sanitary sewers crossing water mains shall be laid to provide a minimum vertical distance of 18 inches of vertical clearance, both water and sewer line. Where there is less than 18 inches of vertical clearance, both water and sewer lines shall be ductile iron for one full length on each side of the crossing with the water pipe joints located as far as possible from the sewer crossing.

3.10 VALVES AND APPURTENANCES

A. All valves and appurtenances shall be installed in the locations shown, true to alignment and rigidly supported. Any damage to the above items shall be repaired to the satisfaction of the Engineer before they are installed.

B. After installation, all valves and appurtenances shall be tested at least 2 hours at the working pressure corresponding to the class of pipe, unless a different test pressure is specified. If any point proves to be defective, it shall be repaired to the satisfaction of the Engineer.

C. Flanged and mechanical joints under water or exposed to weather shall be made with type 316 stainless steel bolts, nuts and washers.

D. Prior to assembly of split couplings, the grooves as well as other parts shall be thoroughly cleaned. The ends of the pipes and outside of the gaskets shall be moderately coated with petroleum jelly, cup grease, soft soap or graphite paste, and the gasket shall be slipped over one pipe end. After the other pipe has been brought to the correct position, the gasket shall be centered properly over the pipe ends with the lips against the pipes. The housing sections then shall be placed. After the bolts have been inserted, the nuts shall be tightened until the housing sections are firmly in contact, metal-to-metal, without excessive bolt tension.

E. Prior to the installation of sleeve-type couplings, the pipe ends shall be cleaned thoroughly for a distance of 8 inches. Soapy water may be used as a gasket lubricant. A follower and gasket, in that order, shall be slipped over each pipe to a distance of about 6 inches from the end, and the middle ring shall be placed on the already laid pipe end until it is properly centered over the joint. The other pipe end shall be inserted into the middle ring and brought to proper position in relation to the pipe already laid. The gaskets and followers shall then be pressed evenly and firmly into the middle ring flares. After the bolts have been inserted and all nuts have been made up finger tight, diametrically opposite nuts shall be progressively and uniformly tightened all around the joint, preferably by use of a torque wrench of the appropriate size and torque for the bolts.

F. Pressure gauges shall not be installed until after the substantial completion date unless otherwise requested by the Owner.

3.11 EXCAVATING, TRENCHING AND BACKFILLING

A. Refer to Section 02315 – Excavation, Bedding, & Backfill for Utility Systems

3.12 CONNECTION TO AN EXISTING MANHOLE

A. Connection to an existing manhole shall be made by mechanically coring into the wall structure of the manhole. Cored opening shall be sized to properly accommodate a rubber boot seal as specified in this section.

3.13 CONNECTION AND REPAIRS TO AN EXISTING SEWER MAIN

A. Where connections or repairs are required, Contractor shall only use solid sleeves and provide all materials and labor necessary to make the connection or repair to the existing pipeline, excluding service lines 6” or smaller.

3.14 CONCRETE COLLARS

A. Construct collars as shown on the Drawings.

3.15 DETECTION WIRE & DETECTION TAPE

A. Detection wire shall be provided over all non-ferrous pipe and properly connected to fittings and valves so that the pipeline may be located after burial. The wire should be buried one foot above the pipeline.

B. The Contractor shall install a continuous run of plasticized metallic tape above the top of the pipe used for gravity sewer and force mains at approximately 30" below finished grade.

C. In addition to the tape, the contractor shall install a continuous run of tracer wire attached to pipe. On pipe runs greater than 500', this tracer wire shall be attached to a 2" galvanized pipe with a 180-degree bend at top, extending 36" above grade for connection to locator equipment. The maximum distance between 2" pipe stubs shall be 500'.

D. Detection Tape shall be suitable for detection with metal pipe location equipment, color coded, and labeled to identify contents of pipe and brightly colored to contrast with the soil.

3.16 THRUST RESTRAINT

A. Provide restraint at all points where hydraulic thrust may develop.

B. Retainer Glands: Provide retainer glands where shown on the Drawings and all associated fittings, valves, and related piping. Retainer glands shall be installed in accordance with the manufacturer’s recommendations; particularly, the required torque of the setscrews. The Contractor shall furnish a torque wrench to verify the torque on all set screws which do not have inherent torque indicators.

C. Harnessing: Provide harness rods only where specifically shown on the Drawings or directed by the Owner and/or Engineer. Harness rods shall be manufactured in accordance with ASTM A 36 and shall have an allowable tensile stress of no less than 22,000 psi. Harness rods shall be hot dip galvanized or field coated with bitumastic before backfilling. Where possible, harness rods shall be installed through the mechanical joint bolt holes. Where it is not possible, provide 90-degree bend eye bolts. Eye bolts shall be of the same diameter as specified in AWWA C111 for that pipe size. The eye shall be welded closed. Where eye bolts

are used in conjunction with harness rods, an appropriate size washer shall be utilized with a nut on each end of the harness rod. Eye bolts shall be of the same material and coating as the harness rods.

D. Concrete Blocking:

1. Provide concrete blocking for all other bends, tees, valves, and other points where thrust may develop, except where other means of thrust restraint are specifically shown on the Drawings.

2. Form and pour concrete blocking at fittings as shown on the Drawings and as directed by the Owner and/or Engineer. Pour blocking against undisturbed earth. Increase dimensions when required by over excavation.

E. Thrust Collars: Collars shall be constructed as shown on the Drawings. Concrete and reinforcing steel shall meet the requirements specified in Article 2.03G of this Section. The welded-on collar shall be attached to the pipe by the pipe manufacturer.

3.17 INSPECTION AND TESTING

A. Clean and flush lines prior to testing. Clean and test lines before requesting final acceptance. Where any obstruction is met, clean the sewers by means of rods, swabs or other instruments. When requested by the Owner and/or Engineer, flush out lines and manholes before final inspection.

B. Gravity Sewers: Pipe lines shall be straight and show a uniform grade between manholes. Correct any discrepancies discovered during inspection.

1. Infiltration Tests: When groundwater is more than two feet above the top of the pipe, provide infiltration testing in accordance with ASTM C 969, with the exception that leakage must be limited to 25 gallons/inch of pipe diameter/mile/day.

a. Install suitable weirs in manholes selected by the Owner and/or Engineer to determine the leakage of ground water into the sewer. The maximum length of line for each infiltration test shall be 5,000 feet. Measure leakage only when all visible leaks have been required and the ground water is two feet above the top of the pipe. If leakage in any section of the sewer line exceeds 25 gallons/inch of pipe diameter/mile/day, locate and repair leaks. Repair methods must be approved by the Owner and/or Engineer. After repairs are completed, re-test for leakage.

b. Furnish, install, and remove the necessary weirs, plugs, and bulkheads required to perform the leakage tests. Where continuous monitoring of flow level is required, the Owner and/or Engineer will provide and operate monitoring equipment.

2. Exfiltration Tests: Choose one of the following when groundwater is less than two feet above the top of the pipe.

a. Hydrostatic Test: Provide testing in accordance with ASTM C 969, with the exception that leakage must be limited to 25 gallons/inch of pipe diameter/mile/day.

1. Test pipe between manholes with a minimum of 10 feet hydrostatic pressure, measured at the center of the pipe at the upstream manhole.

2. The ends of the pipe in the test section shall be closed with suitable watertight bulkheads. Inserted into the top of each bulkhead shall be a 2-inch pipe nipple with an elbow. At the upper end of the test section, a 12-inch riser pipe shall be connected to the 2-inch nipple. The test section of pipe shall be filled through the pipe connection in the lower bulkhead which shall be fitted with a valve, until all air is exhausted and until water overflows the riser pipe at the upper end.

Water may be introduced into the pipe 24 hours prior to the test period to allow complete saturation. House service lines, if installed, shall also be fitted with suitable bulkheads having provisions for the release of air while the test section is being filled with water.

3. During the test period, which shall extend over a period of two hours, water shall be introduced into the riser pipe from measured containers at such intervals as are necessary to maintain the water level at the top of the riser pipe. The total volume of water added during the test period shall not exceed 25 gallons/inch of pipe diameter/mile/day.

b. Low-Pressure Air Test:

1. Low-pressure air test shall conform to UNI-B-6.

2. Required test equipment, including inflatable balls, braces, air hose, air source, timer, rotameter as applicable, cut-off valves, pressure reducing valve, 0-15 psi pressure gauge, 0-5 psi pressure gauge with gradations in 0.1 psi and accuracy of ± two percent, shall be provided by the Contractor. Testing equipment shall be equal to Cherne Air-Loc Testing Systems.

3. The Contractor shall perform all tests in the presence of the Owner's Representative. Copies of all records will be given to the Engineer or the Owner. Such records shall show date, line number and stations, operator, and other such pertinent information as requested by the Engineer.

4. The Contractor is cautioned to observe proper safety precautions in performance of the air testing. It is imperative that plugs be properly secured and that care be exercised in their removal. Every precaution shall be taken to avoid the possibility of over-pressurizing the sewer line.

3. Deflection Test:

a. Test PVC gravity sewer for excessive deflection by passing a mandrel through the pipe. Deflection of the pipe shall not exceed the following:

Nominal Pipe Diameter	Maximum Allowable Deflection
≤ 12-inches	5%
15 to 30-inches	4%
> 30-inches	3%

b. The mandrel size shall be based upon the maximum possible inside diameter for the type of pipe being tested, taking into account the allowable manufacturing tolerances of the pipe. The mandrel shall have an odd number of legs, or vanes, with a quantity of such equal to or greater than nine. The legs of the mandrel shall be permanently attached to the mandrel. A mandrel with variable sizes shall not be allowed. The mandrel shall be constructed of steel aluminum or other material approved by the Owner and/or Engineer, and shall have sufficient rigidity so the legs of the mandrel will not deform when pulling through a pipe.

The mandrel dimensions shall be checked by the Owner and/or Engineer before use by the Contractor.

c. Excavate and install properly any section of pipe not passing this test. Re-test until results are satisfactory.

d. The test shall be performed within the first 30 days of installation and during final inspection, at the completion of this contract.

e. The mandrel shall be performed in accordance with ASTM D 3034, F679, or 2122.

4. Closed Circuit Television: If deemed necessary by the Owner and/or Engineer, the interior of the gravity sewers shall be subjected to a televised inspection. Prior to Final Acceptance the Owner and/or Engineer shall be provided with one copy of the TV inspection report and video cassette showing the entire length of gravity sewer being tested. The report shall contain the condition of pipe, type of pipe, depth, location of services, length, type joint, roundness, and distance between manholes. Any pipe found to be cracked, leading, misaligned, bellied or otherwise defective shall be removed and replaced.

C. Manholes: Prior to testing manholes for water tightness, all lift holes shall be plugged with a non-shrink grout, all joints between Precast sections shall be properly sealed and all pipe openings shall be temporarily plugged and properly braced. Each manhole shall pass one of the following tests:

1. Exfiltration Tests: The manhole, after proper preparation as noted above, shall be filled with water. The maximum allowable leakage shall be eight gallons per foot of depth per 24 hours for 48-inch diameter manholes. Tests shall last a minimum of eight hours. The manholes may be backfilled prior to testing.

2. Vacuum Tests: Vacuum tests shall be performed in accordance with ASTM C 1244, *Standard Test Method for Concrete Sewer Manholes by the Negative Air Pressure (Vacuum) Test.* The manhole, after proper preparation as noted above, shall be vacuum tested prior to backfilling. The test head shall be placed at the inside of the top of the cone section and the compression head inflated to 40 psi to effect a seal between the vacuum base and the manhole structure. Connect the vacuum pump to the outlet port with the valve open. A vacuum of 10-inches of mercury shall be drawn and the vacuum pump shut off. With the valves closed, the time shall be measured for the vacuum to drop to 9-inches. The manhole shall pass if the time is greater than 60 seconds for 48-inch

diameter manholes. If the manhole fails the initial test, necessary repairs shall be made with non-shrink grout while the vacuum is still being drawn. Retesting shall proceed until a satisfactory test is obtained. Vacuum testing equipment shall be equal to that manufactured by P.A. Glazier, Inc.

D. Force Main: Hydrostatic and leakage testing for force mains shall conform to Section 4 of AWWA C600 with the exception that the Contractor shall furnish all gauges, meters, pressure pumps, and other equipment needed to test the line.

1. Required Pressure - The pressure required for the field hydrostatic pressure test shall be 100 pounds per square inch at the highest point in the section being tested.

2. Duration of Test – The duration of each pressure test shall be two (2) hours.

3. Procedures: Each valved section of pipe shall be slowly filled with water to the specified test pressure (measured at the highest point in the section being tested). Pressure shall be supplied by means of a pump connected to the pipe in a satisfactory manner. The pump, pipe connection, and all necessary apparatus, gauges, and meters shall be furnished by the Contractor. The Contractor shall furnish all necessary labor and assistance in conducting the tests. The Owner will furnish, through connections made by the Contractor to existing mains, water for filling the lines for making the test.

4. Expelling Air Before Tests: Before applying the specified test pressure, all air shall be expelled from the pipe. To accomplish this, taps shall be made if necessary at points of highest elevation and afterward tightly plugged.

5. Examination Under Pressure: At intervals during the test (as determined by the Engineer), the route of the pipeline shall be inspected to locate any leaks or breaks. Any cracked or defective joints, cracked or defective pipe, fittings, or valves discovered in consequence of this pressure test shall be removed and replaced with sound material in the manner provided and the test shall be repeated until satisfactory results are obtained.

6. Allowable Leakage: The amount of leakage which will be permitted shall be in accordance with AWWA C600 Standards for all pressure. Leakage shall be defined as the quantity of water that must be supplied into the newly laid pipe, of any valved section thereof, to maintain the specified leakage test pressure after the pipe has been filled with water and the air

in the pipeline has been expelled. No pipe installation shall be accepted if the leakage is greater than that determined by the following formula:

$$L = \frac{SD(P)^{1/2}}{133{,}200}$$

In which L is the allowable leakage in gallons per hour; S is the length of pipe tested, in feet; D is the nominal diameter of the pipe, in inches; and P is the average test pressure during the leakage test, in pounds per square inch gauge.

7. Testing Schedule: Contractor must submit his plan for testing to the Engineer for review at least ten (10) days before starting the test. The Contractor shall remove and adequately dispose of all blocking material and equipment after completion and acceptance of the field hydrostatic test, unless otherwise directed by the Engineer. Any damage to the pipe coating shall be repaired by the Contractor. Lines shall be totally free and clean prior to final acceptance.

E. Re-Testing: Any alterations made to pipeline or manholes performed after initial testing shall be re-tested and pass again, regardless of initial test results.

F. Notification: Owner and/or Engineer shall be notified 24-hours in advance prior to Contractor performing any testing.

3.18 PROTECTION AND RESTORATION OF WORK AREA

A. General: Return all items and all areas disturbed, directly or indirectly by work under these Specifications, to their original condition or better, as quickly as possible after work is started.

1. The Contractor shall plan, coordinate, and prosecute the work such that disruption to personal property and business is held to a practical minimum.

2. All construction areas abutting lawns and yards of residential or commercial property shall be restored promptly. Backfilling of underground facilities, ditches, and disturbed areas shall be accomplished on a daily basis as work is completed. Finishing, dressing, and grassing shall be accomplished immediately thereafter, as a continuous operation within each area being constructed and with emphasis placed on completing each individual yard or business frontage.

Care shall be taken to provide positive drainage to avoid ponding or concentration of runoff.

3. Handwork, including raking and smoothing, shall be required to ensure that the removal of roots, sticks, rocks, and other debris is removed in order to provide a neat and pleasing appearance.

4. The Department of Transportation's engineer shall be authorized to stop all work by the Contractor when restoration and cleanup are unsatisfactory and to require appropriate remedial measures.

B. Existing Site Features: Protect, or remove and replace with the Owner and/or Engineer's approval, all fences, walkways, mailboxes, pipelines, drain culverts, power and telephone lines and cables, property pins, and other improvements that may be encountered in the work.

C. Cultivated Growth: Do not disturb cultivated trees or shrubbery unless approved by the Owner and/or Engineer. Any such trees or shrubbery which must be removed shall be heeled in and replanted under the direction of an experienced nurseryman.

D. Cutting of Trees: Do not cut trees for the performance of the work except as absolutely necessary. Protect trees that remain in the vicinity of the work form damage from equipment. Do not store spoil from excavation against the trunks. Remove excavated material stored over the root system of trees within 30 days to allow proper natural watering of the root system. Repair any damaged tree over 3-inches in diameter, not to be removed, under the direction of an experienced nurseryman. All trees and brush that require removal shall be promptly and completely removed from the work area and disposed of by the Contractor. No stumps, wood piles, or trash piles will be permitted on the work site.

E. Disposal of Rubbish: Dispose of all materials cleared and grubbed ruing the construction of the project in accordance with the applicable codes and rules of the appropriate city and/or county, state and federal regulatory agencies.

G. Swamps and Other Wetlands:

1. The Contractor shall not construct permanent roadbeds, berms, drainage structures or any other structures which alter the original topographic features within the easement.

2. All temporary construction or alterations to the original topography will incorporate measures to prevent erosion into the surrounding swamp or

wetland. All areas within the easement shall be returned to their original topographic condition as soon as possible after work is completed in the area. All materials of construction and other non-native materials shall be disposed by the Contractor.

3. The Contractor shall provide temporary culverts or other drainage structures, as necessary, to permit the free migration of water between portions of a swamp, wetland or stream which may be temporarily divided by construction.

2. The Contractor shall not spread, discharge or dump any fuel oil, gasoline, pesticide, or any other pollutant to adjacent swamps or wetlands.

END OF SECTION

SECTION 02540

UTILITY DIRECTIONAL DRILLING

PART 1 – GENERAL

1.01 REFERENCES

A. American Association of State Highway and Transportation Officials (AASHTO)
- AASHTO T 180 – (2017) Standard Method of Test for Moisture-Density Relations of Soils Using a 4.54-kg (10-lb) Rammer and a 457-mm (18-in.) Drop

B. American Water Works Association (AWWA)
- AWWA C605 – (2021) Underground Installation of Polyvinyl Chloride (PVC) and Molecularly Oriented Polyvinyl Chloride (PVCO) Pressure Pipe and Fittings
- AWWA C900 – (2022) Polyvinyl Chloride (PVC) Pressure Pipe, and Fabricated Fittings, 4 in. Through 60 in. (100mm Through 1,500mm)
- AWWA C906 – (2021) Polyethylene (PE) Pressure Pipe and Fittings, 4 in. through 65 in. (100 mm Through 1,650 mm), for Waterworks

C. American Society for Testing and Materials (ASTM)
- ASTM D1784 – (2020) Standard Specification for Rigid Poly(Vinyl Chloride) (PVC) Compounds and Chlorinated Poly(Vinyl Chloride) (CPVC) Compounds
- ASTM D1785 – (2021) Standard Specification for Poly(Vinyl Chloride) (PVC), Plastic Pipe, Schedules 40, 80, and 120
- ASTM D2241 – (2020) Standard Specification for Poly(Vinyl Chloride) (PVC) Pressure-Rated Pipe (SDR Series)
- ASTM D2513 – (2018a) Standard Specification for Polyethylene (PE) Gas Pressure Pipe, Tubing, and Fittings
- ASTM D3350 – (2021) Polyethylene Plastics Pipe and Fittings Materials
- ASTM F714 – (2024) Standard Specification for Polyethylene (PE) Plastic Pipe (DR-PR) Based on Outside Diameter
- ASTM F1674 – (2018) Standard Test Method for Joint Restraint Products for Use with PVC Pipe
- ASTM F2160 – (2022a) Standard Specification for Solid Wall High Density Polyethylene (HDPE) Conduit Based on Controlled Outside Diameter (COD)
- ASTM F2620 – (2024) Standard Practice for Heat Fusion Joining of Polyethylene Pipe and Fittings

D. National Electrical Manufacturers Association (NEMA)
    - ANSI Z535.1 – (2017) Safety Colors
    - NEMA TC 7 – (2021) Smooth-Wall Coilable and Straight Electrical Polyethylene Conduit

E. U.S. National Archives and Records Administration (NARA)
    - 29 CFR 1926.652 – Safety and Health Regulations for Construction; Subpart P, Excavations; Requirements for Protective Systems

F. U.S. Pipe
    - Rev. 11-2023 Trenchless Applications with Ductile Iron Pipe Submittal

G. American Water Military Services
    - Section 33 05 23.13 Horizontal Directional Drilling (HDD)

1.02 **QUALITY CONTROL**

1.02.1 Qualifications

Ensure that the Field supervisor and workers assigned to this project are experienced in work of this nature and have successfully completed similar projects of similar length, pipe type, pipe size, and soil type using directional drilling in the last three (3) years. As part of the bid submission, submit project descriptions which include, at a minimum, a listing of the location(s), date of project(s), owner, pipe type and material, size installed, length of installation, manufacturer of equipment used, and other information relevant to the successful completion of the project.

1.02.2 Safety

Include in directional drilling equipment machine safety requirements a common grounding system to prevent electrical shock in the event of underground cable strike. Ensure the grounding system connects all pieces of interconnecting machinery; the drill, med mixing system, drill power unit, drill rod trailer, operator's booth, worker grounding mats, and any other interconnected equipment to a common ground. Equip the drill with an "electrical strike" audible and visual warning system that notifies the system operators of an electrical strike.

1.02.3 Horizontal Directional Drilling Plan

Provide a plan prepared, signed, and sealed by a licensed Professional Engineer. Submit supporting calculations, certifications, and material product data demonstrating the strength of the product pipes for acceptance before the beginning of the installation. Demonstrate that the proposed material satisfies the purpose of the utility and withstands the design and construction stresses and pressures. The HDD Plan will include the following:

1.02.3.1 Layout Plan

Provide a plan location of the operation, including entry and exit points, discussing the relationship of the equipment, pipe assembly, and staging areas.

1.01.1.1 Utility Profile

Provide a profile of the utility plotted at a scale appropriate for the work.

1.01.1.2 Equipment List

Provide a directional drilling equipment list including: drilling rig, drill bit, back-reamer, mud mixing and pumping systems, downhole tools, guidance system, and rig safety system. Provide calibration records for guidance system.

1.01.1.3 Drilling Fluid Management Plan

Provide a drilling fluid management plan to include drilling fluid types and specifications, cleaning and recycling equipment, estimated flow rates, procedures for minimizing drilling fluid escape, and the method/location for final disposal of waste drilling fluids. Provide a frac out control plan, including frac control materials that will be onsite and contact information for emergency personnel.

1.01.1.4 Pedestrian Access

When and where installations disrupt pedestrian use of sidewalk for periods exceeding two consecutive days, provide an alternative route that meets current ADA requirements

1.01.1.5 Method and Procedures

Provide an outline of the methods and procedures, describing the pilot hole drilling procedure, the reaming operation, and the pullback procedure, including drawings, schedule of operations, specifications, and method of operation. Include pipe storage and handling details and pipeline assembly and installation procedures.

1.01.1.6 Safety Data Sheets

Submit safety data sheets for fluids and additives

1.01.1.7 Revisions

If site conditions change and require modification to the HDD Plan, submit revised drilling plan to achieve successful installation. Explain, in the revised submittal, the anticipated and encountered conditions that mandated the change in plans.

1.01.2 Fusion Technician Qualifications

The fusion technician must be qualified by the fusion equipment manufacturer to thermally butt-fuse the size of pipe used at the time of fusion performance. Each joint must be data-logged, recorded, and submitted for review.

1.02 **DELIVERY, STORAGE, AND HANDLING**

Inspect materials delivered to the site for damage. All materials found during inspection or during the progress of work to have cracks, flaws, surface abrasions, or other defects will be rejected. Remove defective materials from the job site.

PART 2 – PRODUCTS

1.03 **EQUIPMENT**

1.03.1 Drill Rod

Select the appropriate drill rod to be used. Submit certified statement that the drill rod has been inspected and is in satisfactory condition for its intended use.

1.04 **MATERIALS**

1.04.1 Pipe

~~1.04.1.1 Fusible PVC~~

~~Install [____] in. [(nominal)] diameter fusible polyvinyl chloride pipe [with a dimension ration of [18 (DR 18)] [14 (DR 14)] [____] conforming to AWWA C900] [with a standard dimension ratio of [17 (SDR 17)] [21 (SDR 21)] [26 (SDR 26)] [__] conforming to ASTM D2241] [, [Schedule 40] [Schedule 90] [____] conforming to ASTM D1785]. Provide pipe made from PVC compound meeting or exceeding cell classification 12454 per ASTM D1784. Provide fusible polyvinyl chloride pipe with plain ends. Pipe is [blue] [green] [purple] [____] in color.~~

~~Use Butt fusion jointing method for plain end PVC pipe. Comply with [AWWA C900] [AWWA C605] [ASTM F1674] [____] for butt fusion joints.~~

1.04.1.2 HDPE

HDPE Pipe for directional drilling to be the size and DR noted on the plans. See Section 11200/02530 for HDPE specifications for water/sewer use.

1.04.1.3 DIP

Utilize DIP equipped with low profile flexible restrained joints such as Flex Ring or TR Flex. Gripping push-on joint gaskets, or restrained joint gaskets are not permitted. All DIP shall be installed per DIPRA's Horizontal Directional Drilling with DIP Handbook to include strict adherence to maximum joint deflection.

1.04.2 Drilling Fluids

Use a high-quality bentonite drilling fluid to ensure hole stability, cuttings transport, bit and electronics cooling, and hole lubrication to reduce drag on the drill pipe and the product pipe. Use only fluid with a composition which complies with all Federal, State, and local environmental regulations.

1.04.3 Additives

Use admixtures as required to address soil conditions and water conditions such as water hardness, acidity, and alkalinity

1.04.4 Tracer Wire

Use a continuous sheathed solid conductor copper wire line, minimum #12 AWG. Sheathing must be color coded to match the utility.

PART 2 – EXECUTION

1.05 **EXAMINATION**

1.04.5 Soil Test Data

Provide written documentation of conformance with AASHTO T 180.

1.05 **INSTALLATION**

Ensure all utilities are located and clearly marked prior to start of excavation or drilling.

1.05.1 Drill Set-Up

Design and construct the drill entrance and exit pits.

1.05.1.1 Drilling Fluids

Mix the bentonite drilling fluid with potable water to ensure no contamination is introduced into the soil during the drilling, reaming, or pipe installation process. Make any required additive adjustments.

1.05.2 Drill Entrance and Exit Pits

Drill entrance and exit pits are required. Maintain at minimum size to allow only the minimum amount of drilling fluid storage prior to transfer to mud recycling or processing system or removal from the site.

Do not allow drilling mud to flow freely on the site or around the entrance or exit pits. Remove spilled mud and restore ground to original condition. [Provide shore puts in compliance with OSHA Standards, 29CFR 1926.652].

1.05.3 Drill Entrance and Exit Angle

Ensure entrance and exit angles and elevation profile maintains adequate cover to reduce risk of drilling fluid breakouts and ground exit occurs as specified herein. Ensure that entrance and exit angles generate pullback forces that do not exceed 5 percent strain on the selected pipe material.

1.05.4 Pilot Hole

The type and size of the pilot string cutting head and the diameter of the drill pipe are at the Contractor’s discretion. Not to exceed 4”

Plot Hole tolerances are as follows:

1.05.4.1 Vertical Tolerance:

Provide minimum cover below channel bottom as specified on the plans. Pilot hole may go deeper if necessary to prevent breakout.

1.05.4.2 Horizontal Tolerance:

Plus/minus – 152.4 cm (60 in.) from the centerline of the product pipe

1.05.4.3 Curve Radius:

No curve is acceptable with a radius less than 1,000 ft.

1.05.4.4 Entry Point Location:

Make pilot hole entry point within Plus/minus 60 in. of the location shown on the drawings or as directed by the Contracting Officer in the field.

1.05.4.5 Exit Point Location:

Make the exit point location within plus/minus 60 in. of the location shown on the drawings or as specified. Mandatory pipeline cover requirements are as shown in the drawings or as specified.

1.05.5 Guidance Systems

Allow walkover guidance systems where suitable for this project; use a magnetic survey tool locator installed behind the pilot string cutting head and an electric grid (tru-tracker) system for this project; shorter bores not under water ways. Ensure proper calibration of all equipment before commencing directional drilling operation.

1.05.6 Reaming

Conduct Reaming operations at the Contractor's discretion. Determine the type of back reamer to be utilized by the type of subsurface soil conditions that are encountered during the pilot hole drilling operation. The reamer type is at the Contractor's discretion

1.05.7 Pull Back

Fully assemble the entire pipeline to be installed vie direction drill prior to commencement of pull back operations. Install a continuous length of tracer wire for the full length of each run of nonmetallic pipe length of tracer wire for the full length of each run of nonmetallic pipe in accordance with ANSI Z535.1. Attach wire to top of pipe in such a manner that it will not be displaced during construction operations.

1.05.8 Drilling Fluids Disposal

Collect Drilling fluid returns in the entrance pit, exit pit, or spoils recovery pit. Immediately clean up any drilling fluid spills or overflows from these pits.

Dispose of fluids in a manner that is in compliance with all permits and applicable Federal, State, and local regulations. Safe and Proper disposal of the drilling fluids is the responsibility of the Contractor

Conduct Disposal in compliance with all relative environmental regulations, right-of-way and workspace agreements, and permit requirements.

1.05.9 Connection of Product Pipe to Pipeline

1.06 **FIELD QUALITY CONTROL**

1.06.1 Drill Logs

Maintain drilling logs that accurately provide drill bit location (both horizontally and vertically) at each rod, typically 3.048 m (10ft) along the drill path. In addition, keep logs that record, as a minimum, the following, every 15 minutes throughout each drill pass, back ream pass, or pipe installation pass

A. Drilling Fluid Pressure
B. Drilling Fluid Flow Rate
C. Drill Thrust Pressure
D. Drill Pullback Pressure
E. Drill Head Torque

Make all instrumentation, readings, and logs available to the Contracting Officer at all times during operation.

1.06.2 Field Tests

Perform field tests and provide labor, equipment, and incidentals required for testing. Submit test results, identifying any results that do not meet requirements, to the Contracting Officer within four days of test completion. Provide corrective action and retest pipe not meeting requirements. Provide corrective action as recommended by the pipe manufacturer and subject to approval by the Contracting Officer.

1.07 **CLOSEOUT ACTIVITIES**

Immediately upon completion of work, remove all rubbish and debris from the job site. Remove all construction equipment and implements of service leaving the entire area involved in a neat condition acceptable to the Contracting Officer. Immediately clean “blow holes” or “breakouts” of drilling fluid to the surface and return the surface area to its original condition. Dispose of all drilling fluids, oils, and separated materials in compliance with Federal, State, and local environmental regulations.

Submit an electronic copy and three hard copies of the record drawings to the Contracting Officer within five days after completing the pull back. Include in the

record drawings a plan, profile, and all information recorded during the progress of the work. Clearly tie the record drawings recorded during the progress of the work. Clearly tie the record drawings to the project's survey control. Maintain, and submit upon completion, signed complete work logs of guided directional drill operations

END OF SECTION

SECTION 02720
AGGREGATE BASE COURSE

PART 1 - GENERAL

1.01 SCOPE

A. This section specifies requirements for furnishing materials and constructing a quality controlled graded aggregate base course on a compacted subgrade, for flexible pavements.

B. Contractor shall provide all service, labor, materials, and equipment required for the aggregate base course necessary to complete the work as shown on the drawings or specified in these specifications, or as determined in the field jointly by the Contractor and Engineer.

1.02 RELATED SECTIONS

B. Section 02740 – Asphalt Concrete Paving

1.03 REFERENCES

A. AASHTO T 96-91 – Resistance to Abrasion of Small Size Coarse Aggregate by Use of Los Angeles Machine.

B. AASHTO T 180-90 – Moisture – Density Relations of Soils Using a 10-lb (4.5 kg) Rammer and an 18-in. (457 mm) Drop.

A. ASTM D 1556-90 – Density and Unit Weight of Soil in Place by the Sand-Cone Method.

B. ASTM D 1557-91 – Laboratory Compaction Characteristics of Soil Using Modified Effort.

C. ASTM D 2167-94 – Density and Unit Weight of Soil in Place by the Rubber Balloon Method.

D. ASTM D 2922-91 – Density of Soil and Soil-Aggregate in place by Nuclear Methods (Shallow Depth).

E. ASTM D 3017-88 (1993) – Water Content of Soil and Rock in Place by Nuclear Methods (Shallow Depth).

F. ASMT D 3740-94 – Minimum Requirements for Agencies Engaged in the Testing and/or Inspection of Soil and Rock Used in Engineering Design and Construction.

G. ASTM E 329-93 – Agencies Engaged in the Testing and/or Inspection of Materials Used in Construction.

1.04 REGULATORY REQUIREMENTS

A. Perform all work in accordance with the Department of Transportation, State of Georgia, Standard Specifications, Construction of Road and Bridges, current edition.

1.05 TESTING

A. Laboratory tests for moisture, density relationship for fill materials shall be in accordance with ASTM D 1557, (Modified Proctor).

B. In place density tests in accordance with ASTM D 1556 or ASTM D 2922.

C. Testing laboratory shall operate in accordance to ASTM D 3740 and E 329 and shall be accepted by the Engineer.

D. The testing laboratory and Project Engineer/Project Representative shall be given a minimum of 48 hours notice prior to taking any of the tests.

E. Testing shall be the responsibility of the Contractor and shall be performed at the Contractor's expense by a commercial testing laboratory that operates in accordance with subparagraph C above.

F. Test results shall be furnished to the Engineer.

G. ON SITE OBSERVATIONS OF WORK: The Owner's Representative or Engineer will have the right to require that any portion of the work be done in his presence and if the work is covered up after such instruction, it shall be exposed by the Contractor for observation at no additional cost to the Owner. However, if the Contractor notifies the Owner that such work is scheduled, and the Owner fails to appear within 48 hours, the Contractor may proceed without him. All work done and materials furnished shall be subject to review by the Owner, Engineer or Project Representative. Improper work shall be reconstructed, and all materials, which do not conform to the requirements of the specifications, shall be removed from the work upon notice being received from the Engineer for the rejection of such materials. The Engineer shall have the right to mark rejected materials so as to distinguish them as such.

The Contractor shall give the Owner, Project Engineer or Project Representative a minimum of 48 hours notice for all required observations or tests.

PART 2 – PRODUCTS

2.01 MATERIALS

A. Coarse Aggregate: Aggregate retained on the No. 4 sieve shall consist of durable, angular fragments of gravel or crushed stone obtained from an approved quarry, and shall be capable of withstanding the effects of handling, spreading, and compaction with minimum degradation.

B. Fine Aggregate: Material passing the No. 4 sieve shall consist essentially of particles produced from the crushing of coarse aggregate at the approved source. Other types of fine aggregate, if permitted for use, shall meet the Georgia Department of Transportation's requirements.

C. Grading: The Graded Aggregate Base Course material shall be of uniform quality throughout. The graded aggregate may be produced from an approved source or deposit which will yield a satisfactory mixture conforming to all requirements of these Specifications after it has been crushed or processed as a part of the mining operations, or the material may be furnished in two sizes of such gradation that when combined in the central mix plant the resultant mixture shall conform to the required Specifications. In addition, the aggregate shall be free from lumps and balls of clay, organic matter, objectionable coatings, and other foreign material and shall be durable and sound. The aggregate shall meet the applicable requirements of Section 815 – Graded Aggregate of the Department of Transportation, State of Georgia, Standard Specifications, Construction of Roads and Bridges, Current Edition

The material shall meet the following gradation:

Sieve Size	Percent by Weight Passing
2"	100
1-1 ½ "	95-100
1"	75-95
3/8"	40-75
#4	30-60
#10	20-45
#40	15-30
#200	5-20
Liquid Limit	0-25
Plasticity Index	0-6

PART 3 – EXECUTION

3.01 SUBGRADE PREPARATION

A. Verify subgrade has been inspected, is dry, and gradients and elevations are correct.

B. The subgrade shall be leveled to the lines and grades of the plans and cleaned of all foreign substances prior to constructing the base course.

C. Do not place base on soft, muddy or frozen surfaces.

D. Correct irregularities in subgrade gradient and elevation by scarifying, reshaping, and recompacting.

E. Thorough compaction of the subgrade with appropriate equipment. In general the upper 12 inches of the subgrade should be compacted to at least 100% of AASHTO T-99 maximum dry density. Sheepsfoot rollers usually perform well in cohesive soils such as clays and silts. Vibratory rollers and pneumatic tired rollers can be used in cohesionless soils as sands.

F. The surface of the subgrade shall be checked by the Engineer or his representative for adequate compaction and surface tolerances. Ruts or soft yielding spots that may appear in areas of the subgrade course having inadequate compaction, and areas not smooth or which vary in elevation more than 3/8-inch above or below the required grade established on the plans shall be corrected to the satisfaction of the Engineer or his designated representative. Base material shall not be placed until subgrade has been properly prepared and test results have so indicated.

3.02 AGGREGATE PLACEMENT

A. Aggregate shall be placed with an acceptable spreader in accordance with Department of Transportation, State of Georgia, Standard Specifications for Construction of Roads and Bridges, Current Edition, Section 300 and in accordance with all terms included in these specifications. (The spreader shall contain a hopper, and adjustable screed and be so designed that there will be a uniform, steady flow of material from the hopper. The spreader shall be capable of laying material without segregation across the full width of the lane to a uniform thickness and to a uniform loose density.) Spreaders are not required on curb and gutter road sections.

B. Level and contour surfaces to elevations and gradients indicated.

C. Add small quantities of fine aggregate to coarse aggregate as appropriate to assist compaction.

D. Add water to assist compaction. If excess water is apparent, remove aggregate and aerate to reduce moisture content.

E. Use mechanical tamping equipment in areas inaccessible to compaction equipment.

F. While at optimum moisture (± 1 – ½ %), compact the base course with rollers capable of obtaining the required density. Vibratory, flatwheel, and other rollers accepted by the Engineer may be used to obtain the required compaction. Rolling shall continue until the base is compacted to 98% of the maximum laboratory dry density as determined by ASTM D 1557 or AASHTO T 180. In-place density of the compacted base will be determined in accordance with ASTM D 1556 or ASTM D 2922.

3.03 TOLERANCES

A. Flatness: Maximum variation of ¼ inch measured with an acceptable 10-foot straight edge.

B. Scheduled Compacted Thickness: Within 3/8 inch.

C. Variation from Design Elevation: Within 3/8 inch.

D. Depth measurements for compacted thickness shall be made by test holes through the base course. Where the base course is deficient, correct such areas by scarifying, adding base material and recompacting as directed by the Engineer. Measurements shall be made at staggered intervals not to exceed 250 feet for two-lane streets and roads.

3.04 FIELD QUALITY CONTROL

A. Section 01400 – Quality Control

B. Density and moisture testing will be performed in accordance with AASHTO T 180.

C. If tests indicate Work does not meet specified requirements, remove Work, replace and retest.

D. Frequency of Tests:

1. Base Density – One (1) test per 5,000 square feet.

SECTION 02740
ASPHALTIC CONCRETE – BINDER & SURFACE COURSES

PART 1 – GENERAL

1.01 SCOPE

A. This section covers the general requirements for furnishing materials, labor, and equipment for installing asphalt concrete paving. The limits for the asphalt concrete paving are as shown on the construction plans or as denoted in these specifications.

B. Subgrade preparation shall include leveling, proof-rolling and compacting of the subgrade as required. Installation of the base course shall include the placing and compacting of the material with appropriate equipment. Pavement shall be placed as shown on the plans with the necessary equipment and shall include any prime coats or tack coats required. All work shall be in conformity with the lines, grades and typical cross-sections shown on the Plans. The Contractor must have all equipment and workers on the job site necessary to perform a given operation when it is initiated.

1.02 RELATED SECTIONS

NOT USED

1.03 REFERENCES

A. ASTM D 946-82 (Reapproved 1993) – Penetration-Graded Asphalt-Cement for Use in Pavement Construction.

B. ASTM E 329-93b – Agencies Engaged in the Testing and/or Inspection of Materials Used in Construction.

C. ASTM D 3740-94 – Minimum Requirements for Agencies Engaged in the Testing and/or Inspection of Soil and Rock Used in Engineering Design and Construction.

D. ASTM D 2726-93 – Bulk Specific Gravity and Density of Compacted Bituminous Mixtures Using Saturated Surface-Dry Specimens.

E. ASTM D 2950-91 – Density of Bituminous Concrete in Place by Nuclear Methods.

F. AASHTO-T 245-91 – Resistance to Plastic Flow of Bituminous Mixtures Using Marshall Apparatus.

G. AASHTO-T 179-88 – Effect of Heat and Air on Asphalt Materials (Thin-film Oven Test).

H. ASTM D-1188-89 – Bulk Specific Gravity and Density of Compacted Bituminous Mixtures Using Paraffin-Coated Specimens.

1.04 REGULATORY REQUIREMENTS

A. Perform work in accordance with Georgia Department of Transportation Standard Specifications for Construction of Highways and Bridges – 1993 Edition.

B. Mixing Plant: Conform to Georgia Department of Transportation Standard Specifications.

1.05 TESTING

A. Testing laboratory shall operate in accordance to ASTM D 3740 and E 329 and shall be accepted by the Engineer.

B. The testing laboratory and Project Engineer/Project Representative shall be given a minimum of 48 hours notice prior to taking any of the tests.

C. Testing shall be the responsibility of the Contractor and shall be performed at the Contractor's expense by a commercial testing laboratory that operates in accordance with subparagraph A above.

D. Test results shall be furnished to the Engineer in duplicate.

1.06 WEATHER CONDITIONS

A. Do not place asphalt mixture when ambient air temperature is less than that indicated in the Table nor when the surface is wet or frozen.

Lift Thickness	Min. Air Temperature, Degrees F.
1" or less	55
1.1" to 2"	45
2.1" to 3"	35
3.1" to 4"	30
4.1" to 8"	Contractor's Discretion

B. Mixture shall be delivered to the spreader at a temperature between 250 degrees F and 325 degrees F. Place mixture when temperature of the mixture is not more

than 15 degrees F below bitumen supplier's bill of lading and not more than the maximum specified temperature.

C. Do not mix or place asphalt concrete when the existing surface is wet or frozen.

PART 2 – PRODUCTS

2.01 PRIME COAT

A. Material: Shall consist of preparing and spraying the base course surface with a low viscosity liquid asphalt such as MC-30 and RC-30, which is known as a Cut-Back Asphalt, and allowing the asphalt to penetrate as far as possible.

B. The asphalt shall conform to Section 412 –Bituminous Prime of the Department of Transportation, State of Georgia, Standard Specifications, current edition.

2.02 TACK COAT

A. Material: Shall be AC-20 or AC-30, asphalt cement, conforming to Section 413 – Bituminous Tack Coat and Section 820 – Asphalt Cement of the Department of Transportation, State of Georgia, Standard Specifications, current edition. When the temperature in the shade exceeds 70° F, an emulsion such as CRS-2h or CRS-3 may be used.

2.03 ASPHALT CEMENT AND ADDITIVES

A. Asphalt Cement: Shall conform to the requirements of Section 820.1 – Asphalt Cement of the Department of Transportation, State of Georgia, Standard Specifications, current edition. The material shall be AC-30 with the exception that AC-20 having a penetration at 77ºF not exceeding 80 and an initial viscosity at 77ºF not less than 25 million poises may be used in lieu of AC-30. The loss on heating from the Thin-Film Oven Test shall not exceed 0.75%.

B. Anti-Stripping: Shall conform to the requirements of Section 831.04 – Heat Stable Anti-Stripping Additive of the Department of Transportation, State of Georgia, Standard Specifications, current edition.

2.04 AGGREGATES

A. General: Mineral aggregate shall be composed of fine aggregate or a combination of fine and coarse aggregate. Coarse aggregate shall be that portion of the material retained on a No. 8 Sieve.

B. Fine aggregate shall be considered that portion passing the No. 8 Sieve. Fine aggregate, coarse aggregate, and any additives in combination with the specified percentage of asphalt cement shall meet the requirements of test specified, before approval may be given for their individual use.

C. Fine aggregate: Shall conform to the requirements of Section 802.01 – Fine Aggregate for Asphaltic Concrete of the Department of Transportation, State of Georgia, Standard Specifications, current edition.

D. Coarse aggregate: Shall conform to the requirements of Section 802.02 – Coarse Aggregate for Asphaltic Concrete of the Department of Transportation, State of Georgia, Standard Specifications, current edition.

2.05 HOT MIX ASPHALTIC CONCRETE COURSES

A. General

1. Hot Mix Asphaltic Concrete shall conform to an approved Georgia Department of transportation Designed/Approved Mix and shall be a uniform mixture of aggregates, bituminous material, and if required, hydrated lime, mineral filler, or any other approved additive. The constituents shall be proportioned so as to produce mixtures meeting the requirements given. The general composition limits prescribed are extreme ranges within which the Job Mix Formula must be established. All mixtures shall be based on a design analysis meeting the requirements. Contractor shall submit mix design to the Engineer for approval prior to placement of asphalt.

2. For all Asphalt Mixtures, the Contractor shall exercise reasonable control of the materials so that extreme variations do not occur. The gradation shall be maintained within the composition limits as specified.

3. If the results of any control tests indicate that the characteristic tested does not conform to the Job Mix Formula within the Mixture Control Tolerances as specified, immediate corrective action shall be taken as necessary to assure that the Contractor's quality Control Methods are effective.

B. Binder Course: The Binder Course shall consist of fine and coarse aggregate and mineral filler uniformly mixed with hot mix asphalt cement in an approved mixing plant. The job mix shall be of the following type: 19 mm Superpave and shall conform to Section 828, Department of Transportation, State of Georgia, Standard Specifications, current edition.

C. Surface Course: The Surface Course shall consist of fine and coarse aggregate and mineral filler uniformly mixed with hot mix asphalt cement in an approved mixing plant. The job mix shall be of the following type: 9.5 mm Superpave "Type II" and shall conform to Section 828, Department of Transportation, State of Georgia, Standard Specifications, current edition.

D. A job mix formula indicating the single definite percentage for each sieve fraction of aggregate and for asphalt shall be submitted prior to surfacing operations. The job mix formula shall also show the stability as determined by the Marshall Method, the percent voids, the percent voids filled with asphalt, and the unit weight per cubic foot of compacted mix.

E. The general composition limits are extreme ranges of tolerances to govern mixes made from any raw materials meeting the specifications. The submission of the job mix formula shall bind the Contractor to furnish paving mixture meeting the exact formula within allowable tolerances of plus or minus ½ per cent (1/2%) for asphalt, plus or minus 7 percent (7%) of ½ inch and larger sieve sizes, plus or minus 5 percent (5%) for material passing the ½ inch thick sieve and retained on the No. 200, and plus or minus ½ percent of material passing the No. 200.

F. Compaction shall be done with an 8 to 10-ton steel-wheeled roller or other means approved by the Engineer. Thickness shall not vary more than one-fourth inch and smoothness shall not exceed one-eighth inch for a ten-foot straight edge.

PART 3 – EXECUTION

3.01 EXAMINATION

A. ON-SITE OBSERVATIONS: The Owner's Representative or Engineer will have the right to require that any portion of the work to be done in his presence and if the work is covered up after such instruction, it shall be exposed by the Contractor for observation at no additional cost to the Owner. However, if the Contractor notifies the Owner that such work is scheduled, and the Owner fails to appear within 48 hours, the Contractor may proceed without him. All work done and materials furnished shall be subject to review by the Owner or Engineer. Improper work shall be reconstructed, and all materials, which do not conform to the requirements of the specifications, shall be removed from the work upon notice being received from the Engineer for the rejection of such materials. The Engineer shall have the right to mark rejected materials so as to distinguish them as such.

B. Contractor shall verify that the base has been inspected, is dry, and gradients and elevations are correct.

3.02 PREPARATION

A. Apply prime coat in accordance with Section 412 - Bituminous Prime of the Department of Transportation, State of Georgia, Standard Specifications, current edition. Rate of application shall be 0.20 gallons per square yard. All irregularities in the base course surface shall be corrected prior to application of the prime coat.

B. Do not apply prime to a wet surface when the temperature is below 40ºF in the shade. Do not apply prime when rain threatens nor when weather conditions prevent proper construction of prime coat.

C. Apply tack coat in accordance with Section 413 – Bituminous Tack Coat of the Department of Transportation, State of Georgia, Standard Specifications, current edition. Rate of application shall be 0.06 gallons per square yard of surface.

D. Work shall be planned so that no more tack coat than is necessary for the day's operation is placed on the surface. All traffic not essential to the work should be kept off the tack coat.

E. Apply tack coat to contact surfaces of curbs and gutters. Apply in manner so exposed curb or gutter surfaces are not stained.

F. Coat surfaces of manhole frames and inlets frames with oil to prevent bond with asphalt pavement. Do not tack coat these surfaces.

G. Before beginning the application of the hot mix asphaltic concrete pavement, the existing surface shall be cleaned to the satisfaction of the engineer.

H. Patching and Repair of Minor Defects: All potholes and broken areas in the existing surface and base, which require patching as directed by the Engineer, shall be corrected prior to placing any leveling or surface course. Areas to be patched shall be sawcut out, trimmed to vertical sides, and all loose material removed. These areas shall be filled with concrete pavement patch as detailed in the Plans. The patch shall then be cleaned, primed, and tack coated.

3.03 PLACEMENT

A. Construction shall be in accordance with Section 400 – Hot Mix Asphaltic Concrete Surface Construction of the Department of Transportation, State of Georgia, Standard Specifications, current edition.

B. Asphaltic concrete shall not be placed on a surface that is wet or frozen.

C. Compaction shall commence as soon as possible after the mixture has been spread to the desired thickness. Compaction shall be continuous and uniform over the entire surface. Do not displace or extrude pavement from position. Hand compact in areas inaccessible to rolling equipment. Perform rolling with consecutive passes to achieve even and smooth finish without roller marks. Compaction rolling shall be complete before material temperature drops below 185° F.

D. Areas of pavement with deficient thickness or density shall be removed and replaced at no additional cost to the Owner.

3.04 TOLERANCES

B. General: All paving shall be subject to visual and straightedge inspection during construction operations and thereafter prior to final acceptance. A 10-foot straightedge shall be maintained in the vicinity of the paving operation at all times for the purpose of measuring surface irregularities on all paving courses. The straightedge and labor for its use shall be provided by the Contractor. The surface of all courses shall be inspected with the straightedge as necessary to detect surface irregularities. Irregularities such as rippling, tearing, or pulling, which in the judgment of the Engineer indicate a continuing problem in equipment, mixture or operation technique, will not be permitted to recur. The paving operation shall be stopped until appropriate steps are taken by the Contractor to correct the problem.

B. Flatness: All irregularities in excess of ⅛" in 10' for surface courses and $^{3}/_{16}$" in 10' for intermediate courses shall be corrected.

C. Variation from Design Elevation: Less than ¼".

D. Scheduled Compaction Thickness: Less than ¼" under tolerance.

E. Pavement Deficient in Thickness: When measurement of any core indicates that the pavement is deficient in thickness, additional cores will be drilled 10' either side of the deficient core along the centerline of the land until the cores indicate that the thickness conforms to the above specified requirements. A core indicating thickness deficiencies is considered a failed test. Pavement deficient in thickness shall be removed and replaced with the appropriate thickness of materials. If the Contractor believes that the cores and measurements taken are not sufficient to indicate fairly the actually thickness of the pavement, additional cores and measurements will be taken, provided the Contractor will bear the extra cost of drilling the cores and filling the holes in the roadway as directed.

3.05 FIELD QUALITY CONTROL

A. Quality acceptance of the in-place density of the surface course shall be in accordance with Section 400.05 – Construction, subparagraphs F and G of the Department of Transportation, State of Georgia, Standard Specifications, current edition.

B. Density Testing: Performed in accordance with ASTM D 2726 and ASTM D 2950. Core samples for each day's operation shall be taken, tested, and the results reported to the Engineer the following day. The areas sampled shall be properly restored by the Contractor at no additional cost to the Owner. Compaction must be accomplished when the temperature of the mix is above 185° F and below 300° F. When the density of the compacted course is less than 96% or more than 100% of the maximum laboratory density, the course will be rejected.

C. Temperature:

1. Asphaltic concrete shall not exceed 325° F at any time.

2. Temperature at time of loading shall be recorded on the truck delivery ticket.

D. Frequency of Test:

1. Asphaltic Concrete – One (1) test for each 250 tons placed:

a. Asphalt extraction and gradation test

b. Marshal Stability Test

c. Core Sample

2. Field determination of density by the nuclear method every 5,000 square feet during construction of the base course.

3.06 REMOVAL AND REPLACEMENT OF PAVEMENT

A. General: The removal and replacement of pavement includes two types of pavements which are to be cut and replaced, to cut for pavement widening, or to be cut for the installation of curb and gutter; Asphalt Concrete Pavement and Portland Cement Concrete. This includes both Class "A" Pavement Replacement and Class "B" pavement widening.

B. Class "A" Pavement Replacement: Pavement and base course which must be removed for constructing sewers, manholes, force mains, water lines, and all

other appurtenances in streets shall be replaced with the paving section shown on the miscellaneous details of the construction drawings. The pavement shall be removed to neat lines cut by a masonry saw within the limits shown on the detailed drawings. The base material removed shall be salvaged and stored at the site, if satisfactory for reuse. Backfill shall be thoroughly compacted prior to concrete base. Asphalt topping shall then be applied. The asphalt paving shall be of the following type: to match the existing asphalt pavement, and shall be equal or better than the original pavement. Asphalt patches shall be thoroughly rolled or tamped with a mechanical roller or tamper. Rolling of patches with truck tires will not be permitted.

C. Class "B" Pavement Widening: Pavement and base course which must be removed and replaced in accordance with the paving section on the Miscellaneous Details of the construction drawings. The pavement shall be removed to neat lines cut with a masonry saw, within the limits shown on the detailed drawings. The base material removed shall be salvaged and stored at the site, if satisfactory for reuse. Backfill shall be thoroughly compacted prior to concrete base. An asphalt overlay shall then be applied to the entire roadway and shall be of the following type: to match the existing asphalt pavement. The asphalt overlay shall be thoroughly rolled or tamped with a mechanical roller or tamper.

D. Concrete Pavement: Where the installation of pipe involves the cutting of concrete, the cutting shall be kept to a minimum. Base material removed shall be salvaged for reuse. Once the pipe is installed, the Contractor shall compact the trench to 98% density according to modified proctor. After compaction, Contractor shall install and compact 6" graded aggregate base. The base shall be poured and finished. Concrete shall be 3,000 psi and shall be equal or better than the original pavement.

E. When sidewalks are removed or replaced, match existing finish and construct sidewalks as detailed on the plans.

3.07 ADJUSTMENT OF MANHOLES / VALVE BOXES

A. This item covers the adjustment of manholes and valve boxes to finished grade prior to paving.

B. The Contractor, the Engineer and the Owner's representative shall make a reasonable effort to locate all manholes and valve boxes that will fall within the limits of paving. The existing manhole frame and cover shall be removed and the manhole shall be adjusted to the correct grade by the removal of brick or manhole section or the addition of brick. The existing manhole frame and cover shall be replaced in the mortar bed. Existing valve boxes shall be raised to the proposed finished grade and a square concrete pad poured around the box. On existing

manholes, the contractor can install a riser ring such as Reel Corporation Type 1 adjustable manhole riser if approved by the Engineer and Owner.

3.08 PAVING REINFORCING FABRIC

A. This work shall consist of furnishing and placing asphalt overlay geotextile (paving fabric) beneath a pavement overlay or between pavement layers to provide a water-resistant membrane and crack-retarding layer.

B. Paving Fabric: The paving fabric will be a staple fiber, needle-punched, nonwoven material consisting of at least 85 percent by weight polyolefins, polyesters or polyamides. The paving fabric shall be resistant to chemical attack, rot and mildew and shall have no tears or defects that will adversely alter its physical properties. The fabric shall be specifically designed for pavement applications and be heat-set on one side to reduce bleed-through of tack coat and to minimize fabric pick-up by construction equipment during installation. The fabric shall meet the physical requirements specified in Table 1.

C. Tack Coat: The tack coat used to impregnate the fabric and bond the fabric to the pavement shall be the same grade asphalt cement as used in the hot mix asphalt. A cationic or anionic emulsion may be used as approved by the engineer. The contractor shall follow the recommendations of the paving fabric manufacturer when an asphalt emulsion is used. The use of cutbacks or emulsions that contain solvents shall not be permitted.

D. Shipping and Storage: The paving fabric shall be kept dry and wrapped such that it is protected from the elements during shipping and storage. If stored outdoors, the fabric shall be elevated and protected with a waterproof cover. The paving fabric shall be labeled in accordance with ASTM D 4873-88, “Standard Guide for Identification, Storage, and Handling of Geotextiles.”

E. Weather Limitations: The air and pavement temperatures shall be at least 50° F and rising for placement of asphalt cement and shall be at least 60° F and rising for placement of asphalt emulsion. Neither asphalt tack coat nor paving fabric shall be placed when weather conditions are not suitable, in the opinion of the Engineer.

F. Surface Preparation: The pavement surface shall be dry and thoroughly cleaned of all dirt and oil to the satisfaction of the Engineer. Cracks 1/8” wide or greater shall be cleaned and filled with suitable bituminous material or by a method approved by the Engineer. Crack-filling material shall be allowed to cure prior to placement of paving fabric. Potholes and other pavement distress shall be repaired. Repairs shall be performed as directed by the Engineer.

G. Tack Coat Application: The tack coat shall be applied using a calibrated distributor spray bar. Hand spraying, squeegee and brush application may be used in locations where the distributor truck cannot reach. Every effort shall be made to keep hand spraying to a minimum.

The tack coat shall be applied uniformly to the prepared, dry pavement surface. The tack coat application rate must be sufficient to saturate the fabric and to bond the fabric to the existing pavement surface. The tack coat application rate shall be 0.22 to 0.30 gallons per square yard as required by the roadway surface and environmental conditions. When using emulsions, the application rate must be increased as directed by the engineer to offset the water content of the emulsion. Within the street intersections, on steep grades or in other zones where vehicle speed changes are common, the normal application rate shall be reduced by about 20 percent as directed by the Engineer, but not less than 0.20 gallons per square yard.

The temperature of the tack coat shall be sufficiently high to permit a uniform spray pattern. For asphalt cements, the minimum temperature shall be 290° F. To avoid damage to the fabric, distributor tank temperatures shall not exceed 325° F. For asphalt emulsions, the distributor tank shall be maintained between 130° F and 160° F.

The target width of the tack coat application shall be equal to the paving fabric width plus 6”. Tack coat application shall be wide enough to cover the entire width of fabric overlaps. The tack coat shall be applied only as far as in advance of paving fabric installation as is appropriate to ensure a tacky surface at the time of paving fabric placement. Traffic shall not be allowed on the tack coat. Excess tack coat shall be cleaned from the pavement.

H. Paving Fabric Placement: The paving fabric shall be placed onto the tack coat using mechanical or manual laydown equipment capable of providing a smooth installation within a minimum amount of wrinkling or folding. The paving fabric shall be placed before the asphalt cement tack coat cools and loses its tackiness. Paving fabric shall not be installed in areas where the overlay asphalt tapers to a minimum compacted thickness of less than 1.5”.

When asphalt emulsions are used, the emulsion shall be allowed to cure properly such that essentially no water moisture remains prior to placing the paving fabric. Fabric wrinkles severe enough to cause folds shall be slit and laid flat. Brooming and/or rubber-tire rolling will be required to maximize paving fabric contact with the pavement surface. Additional hand-placed tack coat may be required at overlaps and repairs as required by the Engineer.

Turning of the paver and other vehicles shall be done gradually and kept to a minimum to avoid movement and damage to the paving fabric. Abrupt starts and stops shall also be avoided. Damaged fabric shall be removed and replaced with the same type of fabric and a tack coat.

Joints and Overlaps: At joints, fabric rolls shall overlap by 1" to 3". End joints and joints from repair of wrinkles should be made to overlap or "shingle" in the direction that the pavement overlay will be placed. Overlaps of adjacent rolls may be as great as 6" to accommodate variations between the width of the roadway and the paving fabric. Excess fabric shall be cut and removed to ensure that overlaps of adjacent rolls do not exceed 6". A uniform application of tack coat shall be applied between all fabric overlaps. Any locations that do not have tack between the overlaps shall be corrected by manual placement of tack coat prior to overlay construction.

All areas with paving fabric placed will be paved the same day. No traffic except necessary construction will be allowed to drive on the paving fabric.

I. Overlay placement: Asphalt overlay construction shall closely follow fabric placement. All areas in which paving fabric has been placed will be paved during the same day. Excess tack coat that bleeds through the paving fabric shall be removed. Excess tack coat can be removed by broadcasting hot mix or sand on the paving fabric. Excess sand or hot mix shall be removed before beginning the paving operation. In the event of rainfall on the paving fabric prior to the placement of the asphalt overlay, the paving fabric must be allowed to dry completely before asphalt is placed. Overlay asphalt thickness shall meet the requirements of the contract drawings and documents. The minimum compacted thickness of overlay asphalt shall not be less than 1.5" in areas of paving fabric installed.

TABLE 1. PHYSICAL REQUIREMENTS OF PAVING FABRICS

Petromat 4598

Properties	Test Method	American Standard	Metric Units
Mass Per Unit Area	ASTM D 3776	4.1 oz/yd^2	104 g/m^2
Tensile Strength	ASTM D 4632	101 lb.	0.450 kN
Tensile Elongation	ASTM D 4632	50%	50%

Asphalt Retention	ASTM D 6140	0.20 gal/yd^2	0.90 l/m^2
Melting Point	ASTM D 276-87	300° F	149° C
Surface Texture	VISUAL INSPECTION	Heat-Set on One Side	

END OF SECTION

SECTION 02775
SIDEWALKS, DRIVEWAYS, AND CURBS & GUTTERS

PART 1 – GENERAL

1.01 SCOPE

A. The work included in this section includes furnishing all materials, equipment, and labor necessary to construct Portland Cement Concrete curb and gutter, as shown on the construction plans.

1.02 REFERENCES

A. ACI031 – Specifications for Concrete Buildings.

B. ACI304 – Recommended Practice for Measuring, Measuring, Mixing, Transporting, and Placing Concrete.

C. ASTM A 185-94 – Steel Welded Wire Fabric, Plain, for Concrete Reinforcement.

D. ASTM A 497-94 – Steel Welded Wire Fabric, Deformed, for Concrete Reinforcement.

E. ASTM A 615-95 – Deformed and Plain Billet-Street Bars for Concrete Reinforcement.

F. ASTM C 33-93 – Concrete Aggregates.

G. ASTM C 39-94 – Compressive Strength of Cylindrical Concrete Specimens

H. ASTM C 94-94 – Ready-Mixed Concrete.

I. ASTM C 150-05 – Portland Cement

J. ASTM C 260-94 – Air – Entraining Admixtures for Concrete.

K. ASTM C 309-94 – Liquid Membrane – Forming Compounds for Curing Concrete.

L. ASTM C 494-92 – Chemical Admixtures for Concrete

M. ASTM D 1751-83 (1991) – Preformed Expansion Joint Filler for Concrete Paving and Structures Construction. (Nonextruding and Resilient Bituminous Type).

N. ASTM D 1752-84 (1992) – Performed Sponge Rubber and Cork Expansion Joint Fillers for Concrete Paving and Structural Construction.

O. ASTM D 3740-94 – Minimum Requirements for Agencies Engaged in the Testing and/or Inspection of Soil and Rock as Used in Engineering Design and Construction.

P. ASTM E 329-93 – Agencies Engaged in the Testing and/or Inspection of Materials used in construction.

1.03 REGULATORY REQUIREMENTS

A. Perform work in accordance with the Georgia Department of Transportation Standard Specifications, Current Edition.

B. Conform to applicable standards for paving work on public property.

1.04 TESTING

A. Testing laboratory shall operate in accordance to ASTM D 3740 and E 329 and shall be accepted by the Engineer.

B. The testing laboratory and Project Engineer/Project Representative shall be given a minimum of 48 hours notice prior to taking any of the tests.

C. Testing shall be the responsibility of the Contractor and shall be performed at the Contractor's expense by a commercial testing laboratory that operates in accordance with subparagraph Number 1 above.

D. The Contractor shall submit for review a design mix for "Class B" concrete proposed for use. The mix shall be prepared by an approved testing laboratory. Compressive strength of at least four (4) specimens of the design mix shall indicate 15% higher than 28 days strengths specified. During the work, the Contractor shall make 3 test cylinders for each 75 cubic yards, or fraction thereof, of concrete placed each day. One cylinder shall be tested at 7 days and the other two at 28 days in accordance with ASTM C-39. Copies of all test reports shall be furnished to the Engineer.

1.05 SUBMITTALS

A. Product Data: Provide data on joint filler, admixtures, and curing compounds.

B. Concrete Mix Design.

1.06 WEATHER CONDITIONS

A. Do not place concrete when base surface temperature is less than 40° F, or surface is wet or frozen.

PART 2 – PRODUCTS

2.01 FORM MATERIALS

A. Shall conform to ACI301.

B. Shall be wood, plywood, metal or other accepted material and shall be of the grade or type suitable to obtain the finish specified. The material should be of size and strength to resist movement during concrete placement and to retain horizontal and vertical alignment until removed. Use straight forms, free of distortion and defects.

C. Use flexible spring steel forms or laminated boards to form radius bends as required.

D. Form Ties: Removable or snap-off type, galvanized metal, adjustable length, free of defects that could leave holes larger than 1-inch in concrete surface.

E. Form Release Agent: Colorless mineral oil, which will not stain concrete, or absorb moisture, or impair natural bonding or color characteristics of coating intended for use on concrete.

2.02 REINFORCING STEEL

A. Reinforcing Steel: ASTM A 615, Grade 60 billet steel deformed bars; uncoated finish.

B. Welded Steel Wire Fabric: Plain type, ASTM A 185; uncoated finish.

C. When specifically called for on the plans, reinforcing bars shall be epoxy-coated in accordance with ASTM A775.

2.03 CONCRETE MATERIALS

A. Concrete Materials: “Class A” concrete as defined by the Standard Specifications of the Department of Transportation of Georgia.

B. Fine and Coarse Mix Aggregates: ASSTM C33.

C. Water: Potable, not detrimental to concrete

D. Air Entrainment: ASTM C260.

2.04 JOINT SEALERS

A. Joint Fillers: [ASTM D1751] Asphalt impregnated fiberboard or felt, tongue and grove profile.

B. Sealant: Joints shall be sealed per detail on project drawings. ASTM C 920-94, Type S or M, Grade P or NS, Class 25.

2.05 CONCRETE MIX-BY PERFORMANCE CRITERIA

A. Concrete mixed at the job site shall be mixed in a batch mixer in accordance with American Concrete Institution Standard A.C.I 318, and in a similar manner subject to acceptance. Ready-mixed concrete shall conform to A.S.T.M. Standard C-94. Mixing time for stationary mixers over 1 cubic yard in capacity shall be increased 15 seconds for each additional ½ cubic yard or fraction thereof materials mixed. Construction shall be in accordance with applicable portions of “Building Code Requirements for Concrete” (A.C.I. – 318).

B. Provide concrete to the following criteria:

1. Flexible Strength: 700 psi

2. Compressive Strength: 3,000 psi @ 28 days.

3. Slump: 2 to 3 inches.

4. Air Content: 4% to 8%.

C. Use accelerating admixtures in cold weather only when approved by Engineer. Use of admixtures will not relax cold weather placement requirements.

D. Use calcium chloride only approved by Engineer.

E. Use set retarding admixtures during hot weather only when approved by Engineer.

2.06 SOURCE QUALITY CONTROL AND TEST

A. All sampling and testing services shall be performed at the Contractor's expense, by a testing laboratory which operates in accordance with ASTM D 3740 and E 329 latest edition and accepted by the Engineer.

B. The Contractor shall submit for review a design mix for each class of concrete proposed for use. The mix shall be prepared by an approved testing laboratory. Compressive strength of a least four specimens of the design mix shall indicate 15% higher than 28 days strength specified. During the work, the Contractor shall make 3 test cylinders for each 30 cubic yards, or fraction thereof, of concrete placed each day. One cylinder shall be tested a 7 days and the other two at 28 days in accordance with ASTM C 39. Copies of all test reports shall be furnished to the Engineer in duplicate.

PART 3 – EXECUTION

3.01 CONSTRUCTION OBSERVATION

A. Verify compacted subgrade & granular base are acceptable and ready to support paving and imposed loads.

B. Verify gradients and elevations of base are correct.

C. The Engineer will have the right to require that any portion of the work the done in his presence and if the work is covered up after such instruction, it shall be exposed by the Contractor for observation. However, if the Contractor notifies the Engineer that such work is scheduled, and the Engineer fails to appear within 48 hours, the Contractor may proceed without him. All work done and materials furnished shall be subject to review by the Engineer or Project Representative. Improper work shall be reconstructed. All materials, which do not conform to the requirements of the specifications, shall be removed from the work upon notice being received from the Engineer for the rejection of such materials. The Engineer shall have the right to mark rejected materials so as to distinguish them as such.

3.02 SUBBASE

A. Prepare subbase in accordance with Section 300 - Standard Specifications for Base and Subbase Courses, Department of Transportation, State of Georgia, current Edition.

B. Remove loose material from compacted subbase surface immediately before placing concrete.

C. Proof-roll prepared subbase surface to check for unstable areas and need for additional compaction. Do not begin paving work until such conditions have been corrected and area is ready to receive paving.

3.03 PREPARATION FOR PLACEMENT

A. Water shall be removed from excavations before concrete is deposited. Hardened concrete debris, and other foreign materials shall be removed from the interior of forms and from the inside of mixing and conveying equipment. The reinforcement shall be made secure in position and shall be subject to examination and acceptance.

B. Moisten base to minimize absorption of water from fresh concrete.

C. Notify Engineer minimum 48 hours prior to commencement of concreting operations.

3.04 FORMING

A. Place and secure forms to correct location, dimension, profile, and gradient.

B. Assemble formwork to permit easy stripping and dismantling without damaging concrete.

C. Place joint filler in position, in straight lines. Secure to formwork during concrete placement.

D. Forms shall be constructed to the shape, form line, and grade required and shall be maintained sufficiently rigid to prevent deformation under load. Formwork and details of construction shall conform to ACI-318, Chapter 6.

E. Check completed formwork for grade and alignment to following tolerances:

Top of forms not more than 1/8” in 10’.

Vertical face on longitudinal axis, not more than ¼” in 10’.

3.05 REINFORCING

A. Place Reinforcement as indicated.

B. Interrupt reinforcement at expansion joints.

3.06 PLACING CONCRETE

A. Placing of concrete shall conform to Chapter 5 of the American Concrete Institution Standard A.C.I. 318. Concrete having attained initial set or having contained water for more than 45 minutes shall not be used in the work. Concrete shall not be dropped freely more than 3 feet. Concrete shall be mixed and placed only when the temperature is at least 40 degrees F and rising. Concrete shall be placed only upon surfaces that are free from frost, ice, mud and other detrimental circumstances. When placed on dry soil or previous materials, waterproof paper or polyethylene sheeting shall be laid over the surfaces that are to receive the concrete.

B. Ensure reinforcement, inserts, embedded parts, and formed joints are not disturbed during concrete placement.

C. Place concrete continuously over the full width of the panel and between predetermined construction joints. Do not break or interrupt successive pours such that cold joints occur.

3.07 JOINTS

A. Place expansion joints at 40 foot intervals.

B. Place joint filler between paving components and building or other appurtenances. Recess to of filler ¼ inch.

C. Provide swan joints at 3 feet intervals between sidewalks and curbs.

D. Saw cut contraction joints 3/16 inch wide at an optimum time after finishing. Cut ⅓ into depth of slab.

E. Finishing: After striking-off and consolidating concrete, smooth surface by screeding and floating. Use hand methods only where mechanical floating is not possible. Adjust floating to compact surface and produce uniform texture.

After floating, test surface for trueness with a 10’ straightedge. Distribute concrete as required to remove subsurface irregularities, and refloat areas to provide a continuous smooth finish.

3.08 FINISHING

A. Concrete Finishing: After striking-off and consolidating concrete, smooth surface by screeding and floating. Use hand methods only where mechanical floating is not possible. Adjust floating to compact surface and produce uniform texture.

B. After floating, test surface for trueness with a 10' straightedge. Distribute concrete as required to remove surface irregularities, and refloat repaired areas to provide a continuous smooth finish.

C. Work edges of gutters, back top edge of curb, and formed joints with an edging tool, and round to ¼" radius, unless otherwise indicated. Eliminate tool marks on concrete surface.

D. Do not remove forms for 24 hours after concrete has been placed. After form removal, clean ends of joints and point-up any minor honeycombed areas. Remove and replace areas or sections with major defects, as directed by Architects.

3.09 CONCRETE CURING

A. Immediately after placement and finishing, concrete shall be protected from moisture loss for not less than 7 days. For concrete surfaces not in contact with forms, white-pigmented curing compound shall be uniformly applied after water sheen disappears from the concrete surface. Formed surfaces shall receive and application of curing compound if forms are removed during the 7 day curing period. Curing compound shall not be applied during rainfall.

B. Curing compound shall be applied under pressure at the rate of 1 gallon to not more than 150 square feet by mechanical sprayers. The spraying equipment shall be of the fully atomizing type. At the time of use, the compound shall be thoroughly mixed with white pigments uniformly dispersed throughout the sprayer. Care shall be taken to prevent application to joints where concrete bond is required, to reinforcements steel and to joints where joint sealer is to be placed. The compound shall form a uniform continuous coherent firm that will not crack or peel and shall be free from pinholes and other imperfections. Concrete surfaces that are subjected to heavy rainfall within 3 hours after curing compound has been applied shall be resprayed by the above method and at the above coverage at no additional expense to the Owner.

C. No pedestrian or vehicular traffic shall be allowed over the surface for seven days unless the surface is protected by planks, plywood, or sand. The protection shall not be placed until at least 12 hours after the application of the curing compound.

D. Protect concrete by suitable methods to prevent damage by mechanical injury or excessively hot or cold temperatures.

3.10 FIELD QUALITY CONTROL

A. Three concrete cylinders will be taken every 75 cubic yards of concrete placed each day.

B. One additional test cylinder will be taken during cold weather and cured on site under same conditions as concrete it represents.

C. One slump test will be taken for each set of test cylinders taken.

D. Maintain records of placed concrete items. Record date, location of pour, quantity, air temperature, and test samples taken.

3.11 PROTECTION

A. Immediately after placement, protect pavement from premature drying, excessive hot or cold temperatures, and mechanical injury.

B. Repair or Replace broken or defective concrete, as directed by Engineer.

C. Allow testing company to drill test cores where directed by Engineer, when necessary to determine magnitude of cracks or defective areas. Fill drilled core holes in satisfactory pavement areas with portland cement concrete bonded to pavement with epoxy adhesive.

D. Protect concrete from damage until acceptance of work. Exclude traffic from pavement for at least 14 days after placement. When construction traffic is permitted, maintain pavement as clean as possible by removing surface stains and spillage of materials as they occur.

E. Sweep concrete curb and gutter and wash free of stains, discolorations, dirt, and other foreign material just prior to final inspection.

END SECTION

SECTION 02920
PERMANENT (PERENNIAL) GRASSING AND LANDSCAPING

PART 1 – GENERAL

1.01 SECTION INCLUDES

A. Preparation of ground surface; furnishing and application of lime, fertilizer, seed, and mulch to establish a stand of permanent, mowable grass on all disturbed areas; and placement of all disturbed shrubs, trees, and miscellaneous plants.

B. Seed Protection.

C. Maintenance of seeded areas until final acceptance.

1.02 RELATED SECTIONS

A. Section 02370 – Soil Erosion and Sedimentation Control

1.03 REFERENCES

A. "Standard Specifications, Construction of Roads and Bridges" Section 700 and 702;1993 Edition; published by the Georgia Department of Transportation; hereinafter referred to as the "Standard Specifications."

B. "Manual for Erosion and Sediment Control in Georgia" published by the State Soil and Water Conservation Commission of Georgia; hereinafter referred to as the "Manual". Contractor shall be responsible for the acquisition and utilization of the latest edition of the "Manual for Erosion and Sediment Control in Georgia".

1.04 SUBMITTALS

A. Contractor shall submit list of grasses, lime, fertilizer, seeding and mulching rates; and seeding dates for Engineer's review and approval prior to seeding.

1.05 DEFINITIONS

A. Final Stabilization: All soil disturbing activities at the site have been completed, and that for unpaved areas and areas not covered by permanent structures, at least 70% of the soil surface is uniformly covered in permanent vegetation or equivalent permanent stabilization measures (such as the use of rip rap, gabions, permanent mulches, or geotextiles) have been employed.

B. Land-Disturbing Activity: Any activity which may result in soil erosion from water or wind and the movement of sediments into State waters or onto lands within the State, including, but not limited to clearing, grubbing, dredging, grading, excavating, transporting, and filling.

C. Rolled Erosion Control Blanket (RECB): A temporary blanket consisting of degradable plastic netting that covers and is intertwined with a natural organic or manmade mulch; or, a jute mesh that is typically homogenous in design.

D. Soil Reinforcement Matting: A permanent non-degradable, three dimensional plastic structure which can be filled with soil prior to planting; also known as turf reinforcement matting.

PART 2 – PRODUCTS

2.01 FERTILIZER AND LIME

A. Fertilizer: Standard commercial grade grass fertilizer with a 10-10-10 (N-P-K) proportion.

B. Lime: Natural, agricultural grade, ground or pulverized dolomitic limestone.

2.02 MULCH

A. Dry straw, hay, or wood cellulose fiber of good quality, free of weeds and foreign matter detrimental to plant life.

2.03 GRASS SEED

A. All grass seed shall be certified by the Georgia Department of Agriculture.

B. All grass seed shall be in undamaged containers showing percentage of seed mix, year of production, net weight, date of packaging, and location of packaging.

C. Selected grasses shall be appropriate for the season and site as specified by the Manual.

D. Selected seed shall be equal type and grade to the previously existing grass.

E. The Engineer reserves the right to test, reject, or accept all seed before seeding.

2.04 BLANKETS AND MATTING

A. All blanket and matting materials used shall be on the Georgia Department of Transportation Qualified Products List (QPL #62 for blankets, QPL #49 for matting).

2.05 SOD

A. Sod shall be densely rooted, good quality grass, free from noxious weeds, and appropriate for the region it is to be planted.

B. The sod shall contain practically all of the dense root system and not be less than one (1) inch thick.

C. Sod shall be cut in uniform strips not less than twelve (12) inches in width and not less then twenty-four (24) inches in length.

2.06 TREES, SHRUBBERY, AND MISCELLANEOUS PLANTS

A. All trees or shrubbery damaged by the Work shall be replaced with identical plants of the same general size and quality as previously existed.

2.07 PRODUCT REVIEW

A. The Contractor shall provide the Engineer with a complete description of all products before ordering. The Engineer will review all products before they are ordered.

PART 3 – EXECUTION

3.01 GENERAL

A. All areas that are disturbed by the Work, including trenches and ungraded cleared areas, except areas to be paved, shall be provided with a full stand of permanent grass.

B. Concentrated flow areas, all slopes steeper than 2.5:1 and with a height of ten feet or greater, and cuts and fills within stream buffers, shall be stabilized with sod and/or the appropriate erosion control matting or blanket. Appropriate matting or blankets shall be specified by the Engineer on the Drawings.

C. Where sod is required to match existing conditions, the Contractor shall install sod. No separate payment will be made for sod as it will be considered a part of the final grassing bid item. Contractor will also be required to water sod until it is established.

D. **<u>Important Note</u>: The Contractor is expected to provide a full coverage of permanent grass before the project will be deemed complete. Substantial retainage will be withheld if the Contractor is not preparing seed bed, seeding, and watering throughout the project to ensure a substantial stand at project completion.**

3.02 PREPARATION

A. Remove foreign materials, plants, roots, stones, and debris from surfaces to be seeded so that they are made smooth, uniform, and conform to the adjacent ground surface.

B. Crusted soils shall be loosened to a minimum depth of 3 inches before fertilizer, lime, seed, or sod is applied.

C. Apply fertilizer uniformly at a rate of 1,500 lbs./acre (35 lbs./1000 sq. ft.) unless otherwise directed by the Engineer.

D. Apply lime uniformly at the rate of 2,000 lbs./acre (45 lbs./1000 sq. ft.) unless otherwise directed by the Engineer.

E. Thoroughly mix lime and fertilizer with the first 2 to 4 inches of the soil.

F. Roll to form a smooth, firm seedbed.

3.03 SEEDING

A. Include both temporary and permanent (perennial) grasses in all seeding of permanent grass. For additional information regarding permanent (perennial) grassing or for mixtures with temporary grassing or other perennial grasses, see Chapter 6, Section II of the Manual.

B. Apply seed evenly on freshly prepared and rolled seedbed with a cyclone seeder, drill, cultipacker seeder, or hydroseeder.

C. Certified grass seed shall be applied at the rates and dates indicated in the following table:

Species	Rate Per 1,000 Sq. Ft.	Rate Per Acre	PLANTING DATES		
			Mountains Limestone Valley	Piedmont	Coastal

Bermuda, Hulled	0.2 lb.	10 lbs.	-----	4/1 – 5/31	3/15 – 5/31
Bermuda, Unhulled	0.2 lb.	10 lbs.	-----	10/15 – 2/28	11/1 – 1/31
Bermuda, Sprigs	0.9 cu. ft.	40 cu. ft.		4/1 – 6/15	4/1 – 5/31
	Sod plugs 3 ft. x 3 ft.				
Crown Vetch	0.3 lb.	15 lbs.	9/1 – 10/15	9/1 – 10/15	-----
Fescue, Tall	1.1 lbs.	50 lbs.	3/1 – 4/1 or 8/15 – 9/30	8/15 – 10/15 or 2/15 – 4/15	-----
Sericea Lespedeza, Scarified	1.4 lbs.	60 lbs.	4/1 – 5/31	3/15 – 5/31	3/1 – 5/15
Sericea Lespedeza, Unscarified	1.7 lbs.	75 lbs.	9/21 – 2/28	9/1 – 2/28	9/1 – 2/28
Weeping Lovegrass	0.1 lb	4 lbs.	4/1 – 5/31	3/15 – 5/31	3/1 – 5/31

PLEASE NOTE: The preceding grassing schedule indicated optimal planting dates. However, this schedule may be expanded by several weeks to indicate a permissible, but marginal, planting period.

D. Cover seeds lightly with soil using a rake or cultipacker. On steep slopes, cover seeds by dragging spiked chains or other satisfactory method.

3.04 MULCHING

A. Immediately apply mulch to all seeded areas that do not require matting or blankets.

B. Apply mulch in accordance with Chapter 6, Section II of the Manual.

C. Uniformly apply mulch so as to provide a 75% soil cover.

D. Anchor all mulch. Acceptable anchoring methods include using a disk harrow, commercial tackifier, or netting with openings not exceeding the average size of the mulching material.

3.05 BLANKETS AND MATTING

A. Contractor shall install blankets or matting according to manufacturer's specifications.

3.06 SODDING

A. Sod shall be placed within 48 hours of cutting.

B. Sod shall be moist when laid and placed on moist ground. Place sod by hand, beginning at the toe of slopes and working upwards. The length of the strips shall be perpendicular to the flow of surface water. All joints shall be tightly butted and end joints shall be staggered at least 12 inches. The sod shall be immediately pressed firmly into the ground by tamping or rolling. Fill all joints between strips with fine-screened soil.

C. Anchor sod on slopes steeper than 3:1 with sod pegs or other approved method.

3.07 SHRUBBERY, TREES, AND MISCELLANEOUS PLANTS

A. Plant shrubbery and trees in accordance with written recommendations of nursery supplying the plants, including mulching, fertilizing, and watering instructions.

B. Provide an approved written guarantee from nursery for all transplanted shrubbery and trees for one year after final acceptance. Guarantee shall provide that failed plants be replaced. Guarantee shall provide for mulching, fertilizing and watering of replaced plants and shall extend the guarantee for one year from date of replacement.

3.08 WATERING

A. Apply water with fine spray immediately after each area has been sown.

B. Provide water as necessary to achieve final stabilization.

3.09 MAINTENANCE

A. Maintenance shall consist of providing protection against traffic, watering to ensure uniform seed germination and to keep surface of soil damp, and repairing any areas damaged as a result of construction operations or erosion.

B. If a poor stand of grass is present, re-seed as required to achieve final stabilization. Replace sod as needed.

C. Control erosion at all times. Where damage occurs, repair landscaping work as quickly as practicable.

D. After grass has been established, mow as often as needed to maintain height between 4 and 6 inches until final acceptance.

3.10 ACCEPTANCE

A. Prior to acceptance, the Contractor shall produce a stand of perennial grass that has fully achieved “final stabilization” as defined in the latest edition of “The Manual for Erosion and Sediment Control in Georgia” and the NPDES General Permit for Stormwater Discharges Associated with Construction Activity.

END OF SECTION

SECTION 03100
CONCRETE FORMWORK

PART 1 – GENERAL

1.01 SCOPE

A. Under this heading shall be included designing, furnishing, constructing, adjusting and maintenance of all concrete formwork required for the reinforced concrete shown on the Plans in accordance with the requirements of the Specifications.

1.02 APPLICABLE STANDARDS

A. Where any material or operation is specified by reference to the following published specifications or standards or the specifications or standards of any other organizations, the referenced specifications or standard shall be as much a part of this Section as is quoted in full herein.

1. American Concrete Institute (ACI):

a. 347 Recommended Practice for Concrete Formwork

1.03 DESIGN

A. Design of forms and formwork shall be the responsibility of the Contractor. Design shall include consideration of all dead and live loads which will be exerted on formwork during its period of use. Formwork design shall be performed using the following criteria:

B. Design Loads:

1. Vertical loads shall include the weight of formwork, the weight of freshly placed concrete and all live loads including the weight of workmen, equipment, materials, runways and impact.

2. Horizontal loading shall include but not be limited to, wind, cable tension, inclined supports, placement of concrete, and starting and stopping of equipment. Wall forms shall be designed in accordance with American National Standard A58.1, “Minimum Design Loads for buildings and Other Structures”, or those required by local building codes, whichever is greatest. Bracing for wall forms shall be designed for a minimum horizontal load of 100 pounds per linear foot of wall, applied at the top.

3. Lateral pressure of concrete containing no pozzolans or admixtures, having a slump of 4 inches or less, made with Type I cement weighing 150 pounds per cubic foor, and normal internal vibration shall be calculated on the basis of

$$p = 150\,h$$

where p is the lateral pressure in pounds per square foot and h is the height of fresh concrete above the point considered in feet. Adjustment shall be made in design of forms for concrete having characteristics different from those described above or for external vibrations of forms.

C. Safety Factors: Safety factors for formwork accessories shall be as given in Table 2.4 of ACI 347. All other components of formwork shall be designed for a safety factor of 2.0 except for those with a potential hazard to life which shall have a safety factor of 3.0.

D. Design Approval: The Contractor will not be required to submit shop drawings or design calculations for approval. However, in the event that the Engineer requests the design calculations on any part of the formwork, the Contractor shall submit such calculations for review. Such design calculations found not to be in accordance with the criteria specified herein or the failure to provide such calculations upon request from the Engineer shall be cause for all concreting operations to be suspended until design requirements are completed. Review of design calculations or the absence of review will in no respect relieve the Contractor of the responsibility for formwork design or the liability which may result from improper design or the absence thereof.

PART 2 – PRODUCTS

2.01 MATERIALS

A. Material used in formwork shall be selected by the Contractor on the basis of safety and the quality required in the finished work. All material and accessories shall be new and undamaged. New forms may be reused so long as they retain structural integrity and provide the required quality of the finished work. Form coatings sealers, and parting agents shall be used as required by the work and shall be of quality to insure proper function. Such agents shall be used in accordance with manufacturer's recommendations.

PART 3 – EXECUTION

3.01 CONSTRUCTION

A. General:

1. Forms shall be constructed and maintained so as to insure that after removal of forms the finished concrete members will have true surfaces free of offset, waviness or bulges, and will conform accurately to the indicated shapes, dimensions, lines, elevations, and positions. Form surfaces that will be in contact with concrete shall be thoroughly cleaned before each use.

2. Studs and wales shall be spaced to prevent deflection of form material. Forms and Joints shall be sufficiently tight to prevent leakage of grout and cement paste during placing of concrete. Forms shall be fitted to accurate alignment to assure smooth completed surfaces free from irregularities. Forms shall be readily removable without impact, shock, or damage to the concrete.

B. Concrete Surfaces to be Exposed: Form surfaces that will be in contact with concrete shall be of material that is non-reactive with concrete and that will produce concrete surfaces equivalent in smoothness and appearance to that produced by new 4 foot by 8 foot plywood panels, exterior type, resin-impregnated or plastic faced concrete form. Cut surfaces shall be smooth and treated with form coating. Panel joints that will be in contact with concrete shall be smooth and free of offset. Form materials with defects that will impair the texture and appearance of finish surfaces shall not be used. Form lining, if used, shall be installed over solid backing.

C. Concrete Surfaces to be Unexposed: Form surfaces that will be in contact with concrete shall be sound, tight, lumber or other material producing equivalent finish. Forms under deck slabs may be left in place.

D. Form Ties: Ties shall be factory-fabricated, removable or snap-off metal ties of design that will not allow form deflection and will not spall concrete upon removal. Solid backing shall be provided for each tie. The portion of the tie remaining in the concrete after removal of the exterior parts shall be at least 1-1/2 inches back from any surface of the concrete. Bolts and rods that are to be completely withdrawn shall be coated with a non-staining bond breaker.

E. Chamfering: External corners shall be chamfered by moldings placed in the forms unless the Plans specifically show that chamfering is to be omitted.

F. Coating: Forms shall be coated with form oil or a form-release agent before

reinforcement is placed. The coating shall be a commercial formulation of satisfactory and proven performance that will not bond with, stain, or adversely effect concrete surfaces, and surfaces to be cured with water or curing compounds. The coating shall be used as recommended in the manufacturer's printed or written instructions. Forms for unexposed surfaces, may be wet with water in lieu of coating immediately before placing concrete, except that in cold weather with probable freezing temperatures, coating shall be mandatory. Surplus coating on form surfaces and coating on reinforcing steel and construction joints shall be removed before placing concrete.

G. Removal of Forms:

1. Removal shall be in a manner to ensure complete safety of the structure after the following conditions have been met. Where the structure as a whole is supported, forms for beam sides, and similar vertical structural members may be removed after 72 hours except when curing requirements exceed this time. Supporting forms or shoring shall not be removed until structural members have acquired sufficient strength to support safely their own weight and any construction and/or storage load to which they may be subjected, but in no case shall they be removed before expiration of 7 days, nor shall forms used for curing the removed before expiration of curing period except as specified in Section 03300. Care shall be taken to avoid spalling concrete surfaces or damaging concrete edges.

2. Tie-rods to be entirely removed from the wall shall be loosened 24 hours after concrete is placed, and form ties, except for a sufficient number to hold forms in place, may be removed at that time. Ties wholly withdrawn from wall shall be pulled toward the face that will be concealed from view in the permanent work.

H. Filling of Tie-Rod or Bolt Holes: Filling of tie-rod or bolt holes is specified in Section 03300.

3.02 TOLERANCES

A. The Contractor shall set and maintain forms to insure completed work within the following tolerance limits:

1. Variations From the Plumb Columns, piers, and walls:

a. 1/4 inch in any 10 feet of length and 1 inch maximum for entire length.

2. Corner columns, control joint lines and any other conspicuous lines:

   a. 1/4 inch in any 20 feet of length and 1/2 inch maximum for entire length.

3. Variations from plan Levels or Grades Slabs, ceilings, decks, and beams:

   a. 1/4 inch in any 10 feet of length 3/8 inch in any bay or any 20 feet of length, 3/4 inch maximum for entire length.

   b. Exposed lintels, sills, parapets, horizontal grooves, and other conspicuous lines: 1/4 inch in any bay or in any 20 feet of length, 1/2 inch maximum for entire length.

B. Variation of Distances

1. Between walls, columns, partitions and beams: 1/4 inch per 10 feet of distance but not more than 1/2 inch in any one bay, and not more than 1-inch total variation.

C. Variations in Opening Sizes and Locations Sleeves, floor openings and wall openings: Minus 1/4 inch, plus 1/2 inch.

D. Variations in Cross-Sectional Dimensions and Thickness Columns, beams, slabs, decks, and walls: Minus 1/4 inch, plus 1/2 inch.

E. Variation in plan Lines:

1. Building lines, structure lines: 1 inch from established plan position.

F. Variations in Footing and Foundation Dimensions

1. Dimensions in plan: Minus 1/2 inch. Plus 2 inches (concrete only) or plus 3 inches when earth formed.

2. Misplacement or eccentricity: 2 percent of member width in the direction of misplacement but not more than 2 inches (concrete only).

3. Thickness: Minus 5 percent of specified thickness.

END OF SECTION

SECTION 03150
CONCRETE ACCESSORIES

PART 1 – GENERAL

1.01 WORK INCLUDED

A. Provide accessories for cast-in-place concrete.

1.02 RELATED WORK

A. Section 03100, Concrete Formwork

B. Section 03200, Concrete Reinforcement

C. Section 03300, Cast-In-Place Concrete

1.03 SUBMITTALS

A. Submit product data and samples in accordance with Section 01300.

B. Submit product data on the following items.

1. Water Stops
2. Tongue and Groove Joint Forms
3. Preformed Expansion Joint Fillers

C. Submit samples on the following items:

1. Water Stops
2. Precast Concrete Block Supports for Reinforcing Bars

PART 2 – PRODUCTS

2.01 MATERIALS

A. Precast Concrete Block Supports For Reinforcing Bars: Comply with ACI 315.

Provide blocks with No. 4 dowels bent 90° to support top bars.

B. Membrane: N/A.

C. Water Stops: Polyvinyl chloride meeting all requirements of U.S. Army Corps of Engineer's Specification CRD-C-572 and equal to Burke Water Stops as manufactured by The Burke Company. Provide flat dumbbell type and center bulb type, 9 inches x 3/8-inch at wall thickness of 12-inches or greater, and 6-inches x 3/8-inch at wall thickness less than 12-inches. Provide 6-inch split-ribbed with center bulb type at connections of new concrete structures with existing concrete. Provide water stops as indicated on the Drawings.

D. Preformed Expansion Joint Filler:

1. Bituminous type conforming to the requirements of ASTM D 994.

2. Nonextruding type, self-expanding cork, ¾-inch thick or as otherwise shown on the Drawings, conforming to the requirements of ASTM D1752, Type III, and compatible with the specified joint sealant compound.

E. Joint Sealant: N/A.

F. Tongue And Groove Joint Forms: 24 gauge steel forms complete with steel stakes and splice plates, designed for joints not to receive a poured seal, and equal to Burke Keyed Kold Joint as manufactured by The Burke Company.

G. Inserts: Galvanized steel to fit the proposed hanger or support.

PART 3 – EXECUTION

3.01 INSTALLATION

A. Precast Concrete Block Supports For Reinforcing Bars: Provide in sufficient quantity to support reinforcing bars in slabs formed on earth at a spacing not to exceed 4-feet on centers in both directions. Provide blocks with dowels to support top bars. Block supports are not required in slabs formed on tremie concrete, but may be used at the Contractor's option. Blocks are not required for reinforcing bars properly supported from formwork. At other locations, refer to ACI 315 and CRSI MSP-1.

B. Membrane: N/A.

C. Water Stops:

1. Installation: Protect water stops from dirt, oil and concrete spatter and rigidly secure in position by means of split bulkheads and by fastening to reinforcing bars in two directions at not more than 12 inches on centers. Install water stops in construction joints in hydraulic structures required to contain liquid or to resist the entry of groundwater.

2. Splices: Butt-splice water stops using a thermostatically controlled electric splicing iron as recommended by the manufacturer.

D. Expansion Joints: Provide expansion joints of size and at locations as shown on the Drawings. Place expansion joint fillers every 30 feet in straight runs of walkways, at right angle turns and wherever concrete butts into vertical surfaces, unless otherwise shown on the Drawings.

E. Joint Sealants: N/A.

END OF SECTION

SECTION 03200
CONCRETE REINFORCEMENT

PART 1 – GENERAL

1.01 SCOPE

A. Under this heading shall be included the furnishing, fabricating, delivering and placing of reinforcement steel for all concrete work.

1.02 APPLICABLE STANDARDS

A. Where any material or operation is specified by reference to the following published specifications or standards or the specifications or standards of any other organizations, the referenced specification or standard shall be as much a part of this Section as if quoted in full herein.

B. American Concrete Institute (ACI).

1. 315 Manual for Standard Practice for Detailing Reinforced Concrete Structures

2. 318 Building Code Requirements for Reinforced Concrete

C. American Society for Testing and Materials (ASTM).

1. A82 Cold Drawn Steel Wire for Concrete Reinforcement

2. A90 Test for Weight of Coating of Zinc-Coated (Galvanized) Iron or Steel Articles

3. A123 Zinc (Hot-Galvanized) Coatings on Products Fabricated from Rolled, Pressed and Forged Steel Shapes, Plates, Bars and Strips

4. A 143 Safeguarding Against Embrittlement of Hot-Dip Galvanized Structural Steel Products and Procedures for Detecting Embrittlement

5. A185 Welded Steel Wire Fabric for Concrete Reinforcement

6. A497 Welded Deformed Steel Wire Fabric for Concrete Reinforcement

7. A615 Deformed and Plain Billet-Steel Bars for Concrete Reinforcement

8. A616 Rail-Steel Deformed and Plain Bars for Concrete Reinforcement

9. A617 Axle-Steel Deformed and Plain Steel Bars for Concrete Reinforcement

10. A706 Low-Alloy Steel Deformed Bars for Concrete Reinforcement

D. American Welding Society (AWS)
1. D1.1-82 Structural Welding Code

E. Concrete Reinforcing Steel Institute (CRSI)

1. MSP Manual of Standard Practice

1.03 SHIPPING AND STORAGE

A. Shipping

1. Reinforcement steel shall be handled and shipped in a manner to avoid bending or other damage to the bars.

2. Bars shall be bundled, preferably for one placement, in accordance with the placement schedule and as follows:

3. Do not bundle bars for separate buildings or large structures together. Bars for small structures may be bundled together but each bar or group of bars which have the same piece mark shall be tagged and coded.

4. Metal tags or approved equal shall be provided labeled with legible marks.

5. All bundles shall be tagged at each end. Tags shall show piece marks corresponding to the mark numbers on the placement Drawings and on the bar list.

6. Bars shall be bundled in the largest size practical for handling and shipping.

B. Storage

1. Reinforcement steel shall be stored above ground on platforms, skids or other approved supports. Contact with the soil should be avoided. Proper drainage and protection from the elements shall be provided to minimize corrosion.

2. Welding electrodes shall be stored in a moisture controlled environment

in accordance with AWS and/or the manufacturer's recommendations.

PART 2 – PRODUCTS

2.01 MATERIALS

A. General: Only new material shall be furnished, and shall be free of loose rust, mill scale, deleterious amounts of salts or coatings which reduces or destroys bond. Tight rust and mill scale or surface irregularities will be acceptable, provided the weight and the dimensions, including height of deformations and tensile properties of a test specimen which has been wire-brushed by hand, are not less than those required by the Applicable Codes and Standards.

B. Metal Reinforcement:

1. Reinforcement shall be deformed reinforcement conforming to ASTM A615, A616, A617, or A706, Grade 60, except Grade 40 bars are acceptable when shown on the Contract Plans for the following:

2. Rebars less than #4 diameter.

3. Rebars used as stirrups or ties.

C. Bar Supports and Accessories: Bar supports and accessories shall be galvanized or plastic coated wire conforming with the requirement of ACI 315, Chapter 7, and/or CRSI MSP, and shall be specifically made for the intended use by proprietary manufacturers.

D. Mechanical Connection and/or Anchorage Devices: Mechanical anchorage devices hall be in accordance with ACI 318, Chapter 12.

E. Welding Electrodes: Welding electrodes shall be in accordance with AWS D12.1.

PART 3 – EXECUTION

3.01 FABRICATION

A. Reinforcement steel shall be accurately bent, cut or formed to the dimensions and configurations shown on the Plans and within the tolerances specified in CRSI MSP or, ACI 315, Chapter 4.

B. Reinforcement steel shall be bent cold using pin sizes in accordance with ACI 318.

Bars may be preheated only if approved by the Engineer. Also, reinforcement shall not be rebent or straightened without approval by the Engineer.

C. Reinforcement steel having a reduced section, kinks, visible transverse cracks at bends, or otherwise damaged in any way shall not be used.

D. The ends of bars which are to be welded or mechanically connected for splices shall be saw cut only.

E. Spiral reinforcement shall be accurately fabricated to the diameter and pitch shown on the Plans. One and one-half finishing turns shall be provided at both the top and bottom, unless shown otherwise on the Plans.

F. Reinforcement bars shall not be welded, unless specifically shown on the Plans All the steel reinforcement specifications, except for ASTM A706, shall be supplemented to require a report of material properties necessary to conform to welding procedures specified in AWS D12.1.

3.02 PLACEMENT

A. Reinforcement shall be placed in accordance with the Plans.

B. Only reinforcement that is free of oil, dirt, loose mortar, mud or other non-metallic coatings which reduce bonding capacity shall be installed. After placing, the reinforcement shall be maintained in a clean condition until the concrete is placed.

C. All intersections of the reinforcement shall be securely tied with 16-gauge minimum, black annealed wire. Crossing bars shall not be tack welded.

D. Reinforcement supports shall be as specified and shall be supported on non-corrodible metal or plastic-encased spacers, bolsters or chairs. For concrete placement on grade, reinforcement may be supported on precast concrete blocks spaced to maintain required cover, but only where the Contractor can demonstrate that the precast blocks are at least equal in quality to the class concrete specified for the work.

E. Bars that are partially embedded in concrete shall not be field bent unless concurrence has been obtained from the Engineer. Procedure used shall be based on the Contractor's report and recommendations.

3.03 CONCRETE PROTECTION FOR REINFORCEMENT

A. Cast-in Place Concrete (non-prestressed): Unless shown otherwise on the Plans, the following minimum concrete cover shall be provided for reinforcement:

		Minimum Cover, Inches
1.	Concrete cast against or permanently exposed to earth:	3”
2.	Formed Concrete exposed to earth, water and weather	2”
3.	#6 and larger bars	2”
4.	All #5 and smaller bars	1-1/2”

* The maximum cover shall be no greater than that specified above or shown plus 3/8 inch, except as qualified below. Not to exceed 3 3

3.04 SPLICING

A. Reinforcing Bars: Splices shall be as shown on the Plans or the reviewed placement drawings. When welding is required, comply with Article 3.04 (B) and (C).

B. Welded and Mechanical Connections: A full welded or mechanical splice connection shall develop, in tension or compression, as required, at least 125 percent of the specified yield strength “f_y” of the bar.

C. Welding: Welding shall be performed in accordance with AWS D12.1.

D. Spirals: Splices in spiral reinforcement shall be lap splices of 48 diameter length, but not less than 12 inches, or welded.

3.05 SHOP DRAWINGS

A. Before starting construction operations under this section, detail and placing drawings shall be submitted and approved for the following in conformance with Section 01300, Submittals.

B. Reinforcement details showing sizes and grades of steel, bending and splicing details, splice locations, placement drawings, concrete protection for steel reinforcement, and accessories including position of reinforcement.

END OF SECTION

SECTION 03300
CAST-IN-PLACE CONCRETE

PART 1 – GENERAL

1.01 SCOPE

A. Under this heading shall be included the furnishing of all labor, materials and equipment, tools and energy necessary to accomplish the cast-in-place concrete work to be constructed under this Contract, as shown on the Plans and hereinafter specified.

1.02 RELATED WORK

A. Section 03100 – Concrete Formwork

B. Section 03150 – Concrete Accessories

C. Section 03200 – Concrete Reinforcement

1.03 APPLICABLE STANDARDS

A. Where any material or operation is specified by reference to the following published specifications or standard or the specifications or standards of any other organizations, the referenced specification or standard shall be as much a part of this Section as if quoted in full herein.

B. American Concrete Institute (ACI).

1. 214 Recommended Practice for Evaluation of Compression Test results in Field Concrete.

2. 301 Suggested Specifications for Structural Concrete Buildings.

3. 305 Hot Weather Concreting

4. 306 Cold Weather Concreting

5. 315 Manual for Standard Practice for Detailing Reinforced Concrete Structures

6. 318 Building code Requirements

7. 347 Recommended Practice for Concrete Formwork

8. 350 Concrete for Sanitary Engineering Structures

9. 605 Recommended Practice for Hot Weather Concreting

10. 613 Recommended Practice for Cold Weather Concreting

11. 614 Recommended Practice for Measuring, Mixing and Placing Concrete

B. American Society for Testing and Materials (ASTM).

1. A36 Specification for Structural Steel

2. A185 Welded Steel F Fabric for Concrete Reinforcement

3. A615 Deformed and plain Billet-Steel Bars for Concrete Reinforcement

4. C31 Making and Curing Concrete Compression and Flexural Test Specimens in the Field

5. C33 Concrete Aggregates

6. C39 Test for Compressive Strength of Cylindrical Concrete Specimens

7. C42 Obtaining and Testing Drilled Cores and Sawed Beams of Concrete

8. C78 Test for Flexural Strength of Concrete

9. C94 Ready-Mix Concrete

10. C138 Test for Unit Weight, Yield and Air Content (Gravimetric) of Concrete

11. C143 Test for Slump of Portland Cement Concrete

12. C150 Portland Cement

13. C171 Sheet Materials for Curing Concrete

14. C172 Sampling Fresh Concrete

15. C192 Making and Curing Concrete Test Specimens in the Laboratory

16. C231 Air Content of Freshly Mixed Concrete by the Pressure Method

17. C260 Air-Entraining Admixture for Concrete

18. C470 Single Use Molds for Forming 6 x 12 Inch Test Cylinders

19. C494 Chemical Admixtures for Concrete

1.04 QUALITY ASSURANCE

A. The actual acceptance of aggregates and development of mix proportions to produce concrete conforming to the specific requirements shall be determined prior to the placement of any concrete, by means of laboratory tests made with the constituents to be used on the work.

B. Plant Qualification: Comply with all requirements of the Check List for Certification of Ready Mix Concrete production Facilities of the National Ready Mixed Concrete Association and ASTM C 94.

C. Worker Qualifications: Workers with at least 5 years experience in performing concrete work of high quality, including forming, color, texture and finishing and of the size and complexity of this project.

D. Testing:

1. Provide testing in accordance with the following and Section 3.08 of this specification. Keep the laboratory informed of testing schedule.

2. Obtain standard laboratory compressive test cylinders as required by the laboratory when concrete is discharged from the mixer at the point of placing. Test cylinders will be made and cured by the laboratory in accordance with the requirements of ASTM C 31, including a set of 6 cylinders for each 50 cubic yards or fraction thereof placed each day, for each type of concrete. The cylinders will be cured under laboratory conditions and will be tested in two groups of three at 7 and 28 days of age, respectively in accordance with the requirements of ASTM C 39.

3. Air entrainment tests will be made by the laboratory when concrete is discharged from the mixer at the point of placing, for each pour or other volume of concrete for which a set of test cylinders is required in accordance with the previous paragraph. The amount of air entrained will be determined

by either the pressure method or the volumetric method in accordance with ASTM C231 or ASTM C173, respectively.

4. The laboratory will make slump tests of Class A and Class B concrete as it is discharged from the mixer at the point of placing. Slump tests will be made of every batch of concrete placed, and failure to meet specified slump requirements will be sufficient cause for rejection of that batch. Water cannot be added to the batch after the slump tests are made.

E. Evaluation And Acceptance of Concrete: Evaluation and acceptance of concrete will be in accordance with ACI-318. Chapter 5.

F. When high-early-strength portland cement is premilled, the same strength requirements shall apply except that the indicated strengths shall be attained at seven (7) days instead of twenty-eight (28) days.

G. If, during the progress of the work, it is impossible to secure concrete of the required workability and strength with the materials being furnished, the Engineer may order such changes in proportions or materials, or both, as may be necessary to secure the desired properties. All changes so ordered shall be made at the Contractor's expense.

H. If, during the progress of the work, the Contractor desires to use materials other than those originally approved, or if the materials from the sources originally approved change in characteristics, the Contractor shall, at his own expense, have to make new acceptance tests of aggregates and establishment of new basic mixtures and submit them to the Engineer for review.

I. Under special circumstances, the Engineer may allow minor deviations from the material requirements specified, provided the resulting concrete quality is not adversely affected or provided a suitable adjustment in cement content is made to compensate for such deviations without cost to the Owner.

1.05 SUBMITTALS

A. Submit the following information in accordance with Section 01300.

1. Plant Qualification: Submit satisfactory evidence indicating compliance with the specified qualification requirements.

2. Materials: Submit satisfactory evidence indicating that materials to be used, including cement, aggregates and admixtures meet the specified requirements.

3. Design Mix: Submit the design mix to be used as prepared by qualified persons. The design of the mix is the responsibility of the Contractor subject to the limitations of the Specifications.

4. Submit, at least 24 hours before placing concrete, signed certification providing the following:

   a. Exact location and portion of structure to be placed.

   b. Date and time concrete is to be placed.

   c. Type of concrete to be used (mix), and the method to be used in placing the concrete.

   d. Estimated quantity of concrete to be placed.

   e. That line and grade have been checked and grade properly compacted and tested.

   f. That location, type, size and spacing of reinforcement has been checked and conform to the Drawings.

   g. That any water stops, construction joints, or seals have been placed and conform to the Drawings.

   h. That any embedded pipes have been placed, are the correct size and type and conform to the Drawings.

   i. That any embedded conduits, grounding wires or receptacles have been placed and conform to the Drawings.

   j. That any embedded anchor bolts, bearing plates, dowels etc. are in place, are of the correct size and are located as indicated on the Drawings.

   k. That forms are properly located and adequately braced.

1.06 TESTS

A. All sampling and testing services shall be performed by a testing agency which operates in accordance to ASTM D 3740 and E 329 latest revision and accepted by the Engineer, at the Contractor's expense.

B. The Contractor shall submit to the Engineer, for review, the concrete materials and the concrete mix designs for each class of concrete proposed for use. This submittal shall include the results of all testing performed to qualify the materials and establish the mix designs. All mix designs shall be proportioned in accordance with Section 3.9 of ACI 301, Method 1 (trial batches) or method 2 (field experience). The average strength used as the basis for selecting proportions shall be specified in paragraph 3.9.2 or ACI 301.

C. The testing laboratory shall conduct strength tests of the concrete during construction in accordance with Section 16.3.4 of ACI 301. At least one strength test (6 test cylinders) shall be made for reach 50 cubic yards or fraction thereof, of each mix design of concrete placed in any 1 day.

D. Slump tests shall be conducted regularly during construction in accordance with Section 16.3.5 or ACI 301.

E. The air content of the concrete sample for each strength test shall be determined in accordance with Section 16.3.6 of ACI 301.

F. Results of all tests shall be submitted to the Engineer, with copies to the Contractor. The test reports shall include the exact location in the work at which the batch represented by a test was deposited.

G. Evaluation of test results and acceptance of concrete shall be in accordance with chapter 17 of ACI 301.

H. Conformity of aggregates to these Specifications, and the actual proportions of cement, aggregates, and water necessary to produce concrete conforming to the requirements set forth in Table A, shall be determined by tests made with representative samples of the materials to be used on the work. Tests will be made by an accredited testing laboratory selected by the Contractor and approved by the Engineer in accordance with Section 01410.

I. Cement may be subject to testing to determine that it conforms to the requirements of this Specification. Methods of testing shall conform to the appropriate specification, but the place, time, frequency, and method of sampling will be determined by the Engineer in accordance with the particular need.

J. Samples of fine and coarse aggregates shall be delivered to the laboratory for examination and testing at least three weeks before the Contractor proposes to use them in the work.

K. Concrete shall be proportioned to provide an average compressive strength in accordance with ACI 318 part 3, Section 4.3, to establish a standard deviation test records. Where a concrete production facility does not have test records meeting these requirements the test required average compressive strength shall be as shown on Table D.

1.07 JOB CONDITIONS

A. Severe Weather Concreting: Unless protection is provided and/or approval is obtained, concrete shall not be placed during rain, sleet or snow; rain water shall not be allowed to increase mixing water or to damage surface finish.

B. Cold Weather:

1. Heat concrete materials and protect concrete during freezing or near-

freezing weather.

2. No frozen materials, or materials containing ice shall be used.
3. Concrete materials and reinforcement, forms, fillers and ground with which concrete is to come in contact shall be free from frost or ice.
4. Whenever temperature of surrounding air is below 40 degrees F., concrete placed in forms shall have temperature between 70 degrees F. and 80 degrees F. and means shall be provided for maintaining temperature of not less than 70 degrees F. for 3 days or 50 degrees F. for 5 days or for as much more time as is necessary to insure concrete curing.
5. Salt, calcium chloride or other chemicals for prevention of freezing shall not be used.
6. Housing, covering or other protection used in connection with curing shall remain in place and intact for at least 24 hours after artificial heat is discontinued.
7. Follow recommendations of ACI 306 “cold weather concreting”.

C. Hot Weather

1. Lower temperature of concrete ingredients so that temperature of concrete when placed does not exceed 90 degrees F., or when weather is such as to raise concrete temperature as placed consistently above 80 degrees F. use admixture conforming with ASTM C 494/C 494M-99ae1, Type “D”.
2. Sprinkle subgrade and forms with water before placing concrete.
3. Curing shall start as soon as practicable to prevent evaporation of water; and forms shall be kept wet. Protect flat work from dry winds, direct sun and high temperatures.
4. Follow recommendations of ACI 305 “hot weather concreting”.

PART 2 – PRODUCTS

2.01 MATERIALS

A. Cement:

1. Domestic Portland cement conforming to the requirements of ASTM C 150, Type II domestic manufacture, one brand only. Construct sanitary sewer manholes, wet wells, pump stations and structures exposed to sewage with Type II cement only.
2. Use only one brand of cement in any individual structure unless otherwise

approved by the Engineer. Do not use cement which has become damaged, partially set, lumpy or caked and discard the entire contents of the sack or container which contains such cement. Do not use salvaged or reclaimed cement.

B. Aggregates:

1. ASTM C 33. Coarse aggregates shall be size No. 67, ¾-inch to No. 4 or No. 57, 1-inch to No. 4, as shown on the Drawings, unless otherwise directed by the Engineer. Use size No. 8 for filling of cells of masonry units.

2. In addition to requirements of ASTM C 33, apply the following criteria for structures exposed to sewage:

a. Soft particles: Not more than 2.0 percent.

b. Chert as a soft impurity (defined in Table 3 of ASTM C 33): Not more than 1.0 percent.

c. Total of soft particles and chert as a soft impurity: not more than 2.0 percent.

d. Flat and elongated particles (long dimension more than 5 times short dimension): Not more than 15.0 percent.

C. Water: Potable quality, clean and free from injurious amounts of deleterious materials.

D. Air Entraining Admixture: ASTM C 260.

E. Water Reducing and Retarding Admixture.

1. Concrete Without Superplasticizer:

a. Water Reducing Admixtures: ASTM C494 Type A, equal to Eucon WR-75 by the Euclid Company, pozzolith 200N by Master Builders, Plastocrete 161 by Sika Chemical Corporation, and containing no calcium chloride.

b. Water Reducing and Retarding Admixtures: ASTM C494 Type D, equal to Eucon Retarder-75 by the Euclid Company, Pozzolith 100 XR by Master Builders, Plastiment by Sika Chemical Corporation, and containing no calcium chloride.

C. Accelerating Admixtures: ASTM C494 Type C or E, equal to Accelguard 80 by the Euclid Company, Darex Set Accelerator by W.R. Grace, and containing no calcium chloride.

2. Concrete With Superplasticizer:

a. Water Reducing, High Range Admixtures: ASTM C494, Type F or G, equal to Eucon 37 by the Euclid Company, Rheobild 716 by Master Builders, Daracem 100 by W.R. Grace, Sikament by Sika Chemical

Corporation, and consisting of a second-generation admixture, free of chlorides and alkalis (except for those attributable to water) composed of a synthesized sulfonated complex polymer, enabling the concrete to maintain its rheoplastic state in excess of two hours if necessary.

b. Manufacturer's Job Site Representation: Provide the services of a competent field service representative from the manufacturer of each of the admixtures selected for use to provide at the job site advice and consultation on the use of the admixture materials, including the effect on the concrete in place, including recommending maximum discharge time for superplasticizer method and procedure to induce superplasticizer into mixer, quantities of admixtures to be used if variations are required because of temperature/humidity, wind, or other environmental considerations, and to be available on short call at any time requested by the Owner, Contractor, or concrete producer.

F. Curing Compound: ASTM C 309, Type I and Type ID, Class A and Class B, containing no ingredient which would adversely affect the bond of coatings or toppings.

1. For exposed concrete not to receive special finishes, protective coatings and/or concrete toppings, provide curing and sealing compound equal to Super Rez-Seal, by Euclid Chemical Co., or Burke Spartan-Cote Cure-Seal Hardener by The Burke Company.

2. For exposed concrete to receive special finishes, Coatings shall be utilized according to the drawings.

G. Mortar for Repair of Concrete: Same materials as used for concrete, except omit coarse aggregate and use not more than one part cement to two and one-half parts sand by damp loose volume. Use no more mixing water than is necessary for handling and placing.

H. Burlap Mats: Conform to AASHTO Specification M182.

I. Epoxy Bonding Agent: Euco #452, BurkEpoxy MV, Sikadur Hi Mod, Concresive 1001-LPL, or equal.

J. Powdered Epoxy Coating For Anchor Bolts: Powdered epoxy resin as manufactured by the 3M Company, Scothkote No. 213, Armstrong No. R349, or equal.

2.02 MIXES

A. General Requirements:

1. Mix Design: Conform to ACI 318, Section 5.3. Submit data on consecutive tests and standard deviation.

2. Maximum Water-Cement Ratio:
.37 (lbs/lb) - Concrete with superplasticizer
.45 (lbs/lb) - Class A concrete without superplasticizer

3. Air Content: 5 percent plus or minus 1.5 percent.

4. Slump: 2 -3 inches plus or minus 1-inch

5. Minimum Compressive Strength at 28 days:

4,000 psi

B. Production of Concrete:

1. General: use ready mixed concrete, batched, mixed and tranported in accordance with ASTM C 94, unless otherwise indicated.

2. Air Entraining Admixture: Add admixture into the mixture as a solution measured by means of an approved mechanical dispensing device, and as part of the total mixing water.

3. Water Reducing and Retarding Admixture: Measure and add water reducing and retarding admixture as recommended by the manufacturer. Complete the addition of the admixture within one minute after addition of water to the cement has been completed, or prior to the beginning of the last three-quarters of the required mixing, whichever occurs first. Store, handle and batch admixtures in accordance with the recommendations of ACI 68.

C. Delivery Tickets: Conform to ASTM C94, including cement content and water/cement ratio. Furnish ticket for each batch of ready-mixed concrete delivered to the site.

D. Temperatures: Deliver concrete to site at temperature not higher than 90° F,

otherwise, add ice to reduce the temperature, as recommended by ACI.

D. Modifications to The Mix: Do not make modifications to the mix in the plant or on the job which will decrease the cement content or increase the water-cement ratio beyond that specified.

PART 3 – EXECUTION

3.01 PREPARATION

A. Preparations Before Placing: Place no concrete until the approval of the Engineer has been received. Ensure that forms are thoroughly clean and reinforcing and all other items required to be set in concrete have been placed and thoroughly secured. Notify Engineer 24 hours before concrete is placed.

B. Conveying:

1. General: Transport concrete from the truck to the place of final deposit as rapidly as practicable by methods which will prevent segregation or loss of ingredients to maintain the quality of the concrete. Place no concrete more than 90 minutes after mixing has begun for that batch.

2. Buckets and Hoppers: Provide buckets and hoppers having discharge gates with a clear opening equal to no less than one-third of the maximum interior horizontal area or five times the maximum aggregate size being used, and having side slopes no less than 60 degrees. Provide controls on gates to permit opening and closing during the discharge cycle.

3. Runways: Provide runways as specified in Section 03100. Use extreme care to avoid displacement of reinforcement during the placing of concrete.

4. Elephant Trunks: Use hoppers and elephant trunks to prevent the free fall of concrete for more than 6-feet.

5. Chutes: Provide metal or metal lined chutes having a slope not exceeding one vertical to two horizontal and not less than one vertical to three horizontal. Use chutes more than 20-feet long and chutes not meeting the slope requirements only if they discharge into a hopper before distribution.

6. Pumping Equipment: If required, provide pumping equipment and

procedures conforming to ACI 304.2R, placing Concrete by pumping Methods. Measure slump at the point of discharge. Do not allow loss of slump in pumping to exceed 1 ½-inches.

7. Conveying Equipment Construction: Do not use aluminum or aluminum alloy pipe for tremies or pump lines and chutes, except for short lengths at the truck mixer.

8. Cleaning: Clean conveying equipment at the end of each concrete operation.

3.02 MIXING

A. Concrete shall be ready-mixed, or transit-mixed, as produced by equipment acceptable to the Engineer. No hand mixing will be permitted. Adding water in controlled amounts during the mixing cycle shall be done only with the express approval of, and under the direction of, the Engineer.

B. Ready-mix or transit-mixed concrete shall be transported to the site in watertight agitator or mixer trucks loaded not in excess of rated capacities for the respective conditions as stated on the nameplate. Discharge at the site shall be within 1-1/2 hours and within one hour when ambient temperature is above 85 degree F after cement was first introduced into the mix. Central mixed concrete shall be plant-mixed a minimum of 1-1/2 minutes per batch and then shall be truck-mixed or agitated a minimum of 8 minutes. Agitation shall begin immediately after the pre-mixed concrete is placed in the truck and shall continue without interruption until discharge. Transit-mixed concrete shall be mixed at mixing speed for at least 10 minutes immediately after charging the truck, following by agitation without interruption until discharged.

C. All central plant and rolling stock equipment and methods shall conform to ACI 304, ASTM C 94, and the latest Truck Mixer and Agitator Standards of the Truck Mixer Manufacturers' Bureau of the National Ready-Mixed Concrete Association.

D. The re-tempering of concrete or mortar which has partially hardened, that is, mixing with or without additional cement, aggregate, or water, will not be permitted.

E. Attention is called to the importance of dispatching trucks from the batching plant so that they shall arrive at the site of the work just before the concrete is required, thus avoiding excessive mixing of concrete while waiting or delays in placing successive layers of concrete in the forms.

F. Deliver to the Engineer at the time of each truckload transported to the site a mix ticket, showing at least the following: concrete plant identification, date, quantity of ingredients (including water) added at the batch plant, time of charge, and truck number.

3.03 INSPECTION AND CONTROL

A. The preparation of forms, placing of reinforcing steel, conduits, pipes, and sleeves, batching, mixing, transportation, placing, curing, and testing of concrete shall be at all times under the inspection of the Engineer.

B. The Contractor shall engage the services of an accredited testing laboratory approved by the Engineer in accordance with Section 01340 to establish the basic mixtures of concrete as required by the specifications, to test field control cylinder specimens, and to conduct other tests as specified herein or as deemed required by the Engineer to insure the quality of concrete as specified. All tests shall be performed in accordance with the applicable ASTM standard methods.

3.04 APPLICATION

A. Placing:

1. General: Deposit concrete continuously, or in layers of such thickness (not exceeding 2-feet in depth) that no concrete will be deposited on concrete that has hardened sufficiently to cause the formation of seams or planes of weakness. Repair any such seams or planes of weakness with injected epoxy grout and patch to match adjacent surfaces.

2. Supported Elements: Allow at least two hours to elapse after depositing concrete in columns or walls before depositing in beams, girders, or slabs supported thereon.

3. Segregation: Deposit concrete as nearly as practical in its final position to avoid segregation due to rehandling or flowing. Do not subject the concrete to procedures which cause segregation.

4. Concrete Under Water: Place all concrete in the dry except for Tremie concrete.

B. Consolidating Concrete:

1. General: Consolidate concrete by means of internal vibrators operated by competent workmen.

2. Vibrators: Use vibrators having a minimum head diameter of at least 2-

inches, a minimum centrifugal force of 700-pounds and a minimum frequency of 8,000 vibrations per second.

3. Vibrators for Confined Areas: In confined areas, use additional vibrators having a minimum head diameter of 1 ½-inches, a minimum centrifugal force of 300-pounds and a minimum frequency of 9,000 vibrations per second.

4. Spare Vibrator: Keep one spare vibrator for each three in use on the site during all concrete placing operations.

5. Use of Vibrators: Insert and withdraw vibrators at points approximately 18-inches apart. At each insertion operate vibrator for 5 to 15 seconds. Do not transport concrete in the forms by means of vibrators.

C. Protection: Do not allow rainwater to increase the mixing water or to damage the surface finish. Protect concrete from construction overloads and do not apply design loads until the specified strength has been attained.

D. Construction Joints: Except as otherwise indicated on the Drawings, provide horizontal construction joints at top of foundation members and slabs on grade and at the soffit of supported slabs and beams. Locate other horizontal and vertical construction joints as indicated on the Drawings. Except in the locations shown, provide no other joints, unless otherwise recommended by the Contractor and approved by the Engineer.

E. Bonding: Before depositing new concrete on or against concrete that has set, thoroughly clean the surfaces of the set concrete to expose the coarse aggregate and to ensure they are free of laitance, coatings, foreign matter and loose particles. Retighten forms. Dampen, but do not saturate hardened concrete of joints and then thoroughly cover with a coat of cement grout of similar proportions to the mortar in the concrete. Place the grout as thick as possible on vertical surfaces and at least ½-inch thick on horizontal surfaces. Place the fresh concrete before the grout has attained its initial set.

F. Embedded Items: In addition to steel reinforcement, securely place pipes, inserts and other metal objects as shown, specified or ordered to be built into, set in or attached to the concrete. Take all necessary precautions to prevent these objects from being displaced, broken or deformed. Before concrete is placed, take care to determine that all embedded parts are firmly and securely fastened in place as indicated. Thoroughly clean surfaces free from paint and other coating, rust, scale, oil, and any foreign matter. Pressure test embedded pipes for leakage, as specified elsewhere, before concrete is placed. Wrap metal rainwater leaders,

firelines and other such piping with at least two thicknesses of 30 lb. Roofing felt before placing concrete. Do not embed wood in concrete. Pack concrete tightly around pipes and other metal work to prevent leakage and to secure perfect adhesion. Adequately protect drains from intrusion of concrete.

G. Bonding To Existing Surfaces: Clean existing concrete surfaces that are to have new concrete bonded thereto of all grease, oil, dust, dirt and loose particles and coat with an epozy bonding agent just prior to placing of the new concrete. Apply the bonding agent as recommended by the manufacturer and allow the agent to become tacky before the new concrete is placed. Do not allow the bonding agent to overlap or be spilled on the surfaces to be exposed after the work is completed.

3.05 FORM REMOVAL

A. Maintain formwork in place for the following structural conditions until the concrete has attained the minimum percentage of indicated design compressive strength or for the period of time specified in the following table.

Note: time periods in the table include all days except those in which the temperature falls below 40 degrees F.

Structural Member or **Condition**	Normal Strength **Concrete**	Normal High-Early Strength **Concrete**	Minimum Compressive Strength for Form Removal (% Design Strength)
Floor slabs	5 days	3 days	70

3.06 CONCRETE FINISHING

A. Repair of Surface Defects:

1. General: Repair surface defects, including tie holes immediately after form removal. Dampen the area to be patched and an area at least 6-inches wide surrounding it to prevent absorption of water from the patching mortar. Notify the Engineer prior to commencing operations.

2. Removal of Defective Concrete: Remove all honeycombed and other defective concrete down to sound concrete. Cut edges perpendicular to the surface or slightly under cut. Sand blast surfaces to receive repair.

3. Bonding Grout: Thoroughly dampen surfaces to be patched and apply a coat of bonding grout consisting of one part cement to one part fine sand passing a No. 30 sieve and having the consistency of thick cream.

4. Placing Patching Mortar: After the bonding grout begins to lose its water sheen, apply a premixed patching mortar, thoroughly consolidating it into place and striking it off so as to leave the patch slightly higher than the surrounding surface. Leave mortar undisturbed for one hour to permit initial shrinkage and then finally finish.

5. Tie Holes: After being cleaned and thoroughly dampened, fill the tie holes solid with patching mortar.

B. Concrete Finishes:

1. Formed Surfaces: After removal of forms, chip off all irregular projections, grind flush with adjacent surfaces and finish concrete surfaces in accordance with the following schedule:

Finish Designation	**Area Applied**
F-1	Exterior walls below grade not exposed to water: Repair defective concrete, fill depressions deeper than ½-inch, and fill tie holes.
F-2	Exterior and interior walls exposed to water: Repair defective concrete, remove fins, fill depressions ¼-inch or deeper, and fill tie holes.
F-3	Walls of structures of buildings exposed to view and underside of formed floors or slabs: In addition to Finish F-2, fill depressions and airholes with mortar. Dampen surfaces and then spread a slurry consisting of one part cement and one and one-half parts sand by

damp loose volume on the surface with clean burlap pads or sponge rubber floats. Remove any surplus by scraping and then rubbing with clean burlap.

F-4 Tops of walls, beams and similar unformed surfaces occurring adjacent to formed surfaces: Strike smooth after concrete is placed and float to a texture reasonably consistent with that of formed surfaces.

2. Slab Surfaces:

a. General: After concrete has been consolidated, finish all concrete slabs with a floated finish. After floating, trowel finish all concrete slabs, except for areas to receive roofing, insulation, tile or topping, and immediately light broom finish. Where a finish is not indicated, provide a troweled finish.

c. Light Broomed Finish: After floating, power trowel slabs to receive a light broomed finish to produce a smooth surface, relatively free of defects. Before the surface sets, pass a soft broom drag over the surface to produce a surface uniform in texture and appearance.

f. Saw Cut Joints: cut joints that are to be saw cut not sooner than 2 hours after the concrete is poured and not later than 8 hours after the pour.

3.07 PROTECTING

A. Curing:

1. Immediately after surface defects have been repaired, apply a spray coat of curing compound to all exposed surfaces, including slabs, walls, beams and columns in accordance with the manufacturer's recommendations. Protect exposed steel keyways and other embedded items from the curing compound. Water cure, as specified in paragraph B hereunder, all concrete surfaces that are to be coated with a coal tar epoxy system, and concrete floors requiring a bond for special finishes.

2. Do not apply curing compound during periods of rainfall. Should the film become damaged from any cause within the required curing period, immediately repair the damaged portions with additional compound. Upon removal of forms, immediately coat

the newly exposed surfaces to provide a curing treatment equal to that provided for the surface.

3. Curing and Sealing Compound: Use clear compound conforming to Federal Specification TT-C-800A, 30% solids content minimum, having test data from an independent laboratory indicating a maximum moisture loss of 0.030 grams per sq. cm. when applied at a coverage rate of 300 sq. ft. per gallon, and equal to Super Floor Coat or Super Pliocure by The Euclid Chemical Company or Masterseal 66 by master Builders. Furnish manufacturer's certification as required.

4. Apply specified clear curing and sealing compound to all horizontal areas so noted on the Drawings or in the Specifications. Apply immediately after final finishing. Apply this compound to non-structural construction joints of slabs on grade to act as a bond breaker prior to placement of adjacent concrete.

B. Water Curing Method: Cure all concrete that is to be water cured by either the wet burlap method, by continuous fogging or by covering with waterproof sheet.

1. Wet Burlap Method: Cover concrete surface with a double thickness of burlap, cotton mats, or other approved material, kept thoroughly saturated with water. Keep the forms wet until removed and upon removal, start the curing specified herein immediately. Cure the concrete for a period of 7 days for normal Portland cement or 4 days for high early strength cement. Do not submerge concrete poured in the dry until it has attained sufficient strength to adequately sustain the stress involved and do not subject it to flowing water across its surface until it has cured 4 days.

2. Continuous Fogging: Perform continuous fogging by fogging with a nozzle which so atomizes the flow of water that a mist, and not a spray, if formed. Fog the concrete surface regularly without allowing any part of the surface to become dry. Take all necessary precautions to prevent erosion of the concrete surface by the water.

3. Covering With Waterproof Sheet: Keep the entire area to be cured continuously wet by fogging, as specified in the fogging paragraph above, for at least 18 hours and then immediately cover with waterproofing curing sheet conforming to ASTM C171, waterproof paper and polyethylene film, free of holes or tears. Keep sheet fully

flat, without wrinkles or air bubbles, held down tautly at all edges. Do not use this method on slabs which will be exposed to view.

C. Hot Weather Curing: Curing for hot weather concreting shall be limited to moist curing methods. All exposed concrete and all forms shall be covered with burlap or carpet mats, wetted before placing, and overlapped at least 6 inches. Fog sprays shall be used during finishing operations and until the burlap or carpet mats are placed. Protective mats shall remain in place in a wet condition for 7 days. Protective mats shall remain in place for an additional 3 days without the application of water to permit gradual drying of the concrete surfaces. Forms may be removed after 3 days of moist during provided that protective mats, in a wet condition, are replaced so as to cover all exposed concrete.

3.08 FIELD TESTS

A. Sets of six field control cylinder specimens shall be taken for every fifty (50) cubic yards of concrete placed. During cold weather concreting, one additional test cylinder shall be taken and cured on the job site under the same conditions as the concrete it represents. Not less than one set of specimens shall be taken on any one day when concrete is being placed. One slump test shall be performed for each set of test cylinders taken and for each concrete mixer truck load deliver. All specimens shall be taken in conformance with ASTM C31. When average ultimate 28-day strength of control cylinders in any set falls below the required ultimate strength or below proportional minimum 7-day strengths where proper relation between 7 and 28-day strengths have been established by tests, proportions, water content, or temperature conditions shall be changed to secure the required strength.

B. The Contractor shall cooperate in the making of such tests to the extent of allowing free access to the work for the selection of samples, providing heated (when required) moist storage facilities for specimens, affording protection to the specimens against injury or loss through his operations, and furnishing material and labor required for the purpose of taking concrete cylinder samples, curing boxes, and shipping boxes.

C. Air entrainment shall be measured by the testing laboratory at time of concrete deposit in accordance with ASTM C231.

3.09 HYDROSTATIC TESTING

A. Hydrostatic testing of cast-in-place concrete structures shall be in accordance with ACI 350.1/350.1R-7 Tightness Testing of Environmental

Concrete Structures. The testing criteria shall be HST-NML, no measurable loss.

B. Water for testing concrete structures shall be potable and be provided by the Contractor at his cost for the test of each structure.

C. Contractor shall be responsible for providing all pumps, equipment, and temporary piping or hoses for filling basins to be tested and for transfer of the testing water for re-use in testing other basins. Contractor shall coordinate hydrostatic and process equipment testing to minimize the volume of water needed for testing.

3.10 DAMAGE TO THE WORK

A. The requirements of these Specifications are to be considered the minimum with respect to strength, placement, finishing and curing. The Contractor shall extend the requirements of the Specifications as necessary to provide finished work free of defects. Defective work, including low strength, cracked concrete, surface irregularities, exceeding of tolerances, or any other defects which are caused by the Contractor's operations or construction methods shall be removed and replaced at no additional cost to the Owner.

END OF SECTION

SECTION 03480
PRECAST STRUCTURES

PART 1 - GENERAL

1.01 SECTION INCLUDES

A. Rectangular, monolithic, or sectional precast water and wastewater structures, pipe connectors, and accessories.

1.02 REFERENCES

A. Prestressed Concrete Institute: Manual for Quality Control for Plants and Production of Precast and Prestressed Concrete Products.

B. National Precast Concrete Association: Quality Control Manual for Precast Concrete Plants.

C. American Society for Testing and Materials:

1. ASTM C478 - Standard Specification for Precast Reinforced Concrete Manhole Sections.
2. ASTM C890 - Standard Practice for Minimum Structural Design Loading for Monolithic or Sectional Precast Concrete Water and Wastewater Structures.
3. ASTM C891 - Standard Practice for Installation of Underground Precast Concrete Utility Structures.
4. ASTM C923 - Standard Specification for Resilient Connectors Between Reinforced Concrete Manhole Structures, Pipes and Laterals.
5. ASTM C913 - Standard Specifications for Precast Concrete Water and Wastewater Structures.

D. American Association of State Highway and Transportation Officials Standard Specification for Joints for Circular Concrete Sewer and Culvert Pipe Using Flexible Watertight Gaskets (AASHTO M198).

E. American Concrete Institute Building Code Requirements for Reinforced Concrete (ACI 318).

F. Occupational Safety and Health Administration Standard 1926.704 – Requirements for Precast Concrete.

1.03 SUBMITTALS

A. Schedule of precast concrete structure sections to be provided on the project, charting the following:

1. Sheet number where the precast structure plan & profile is shown on the plans.
2. Line number (when there is more than one line on the project).
3. Precast Structure Station number.
4. Invert Elevation of the influent and effluent line as indicated on the plans.
5. Top Elevation of the precast structure frame as indicated on the plans.
6. Top elevation of precast structure base slab as calculated.
7. Total height of precast structure required from top of base slab to top of frame.
8. Total height of assembled base, risers and cone or top provided from top of base to top of top.
9. Manufacturer's Part No. or Catalogue No. and number required of each base, riser, and top provided for the precast structure.
10. Each Pipe size and type and its Connector's, Part No., distance from top of base slab, and horizontal distances from inner wall corners of precast structure.

B. Detail of each precast concrete structure to be provided, sealed by the Registered Professional Engineer employed by the manufacturer showing or charting the following:

    1. Manufacturer's Part No. or Catalogue No.
    2. Inside Dimensions
    3. Lay Length excluding base slab
    4. Wall thickness and base or top thickness where applicable
    5. Handling Weight
    6. Wire Size, Spacing and area provided per vertical foot
    7. Reinforcing Bar size and spacing
    8. Design loads
    9. Concrete Mix No. and design strength
    10. Height, width, slope and annular space of the tongue and groove

C. Pipe Connector Details and Material Specifications

D. Joint Material Detail, Material Specifications and calculations showing that the joint material cross section is greater than the joint's annular space times its height.

E. Lifting Device and Hole Detail.

F. At the request of the Engineer or Owner, submit the following:

    1. Structural analysis and design calculations for Precast Components, performed in accordance with applicable codes and standards, showing that allowable stresses will not be exceeded. All calculations must be sealed by a Registered Professional Engineer employed by the Precast Concrete Manufacturer.
    2. Calculations or test results verifying that the lifting device components and holes are designed in accordance with OSHA Standard 1926.704.

3. Concrete 28-day compression strength results for every day production of Precast Components for the project was performed, showing the required strength according to the guidelines established in ACI 318.
4. Reinforcing and Cement mill reports for materials used in the manufacture of Precast Components for this project.
5. The above test reports for similar Precast Components recently produced, submitted prior to production of Precast Components for this project.

1.04 QUALIFICATIONS

A. The Precast Manufacturer shall comply with one of the following requirements:

1. Manufacture Precast components for the project in a plant certified in the Prestressed Concrete Institute's (PCI) Plant Certification Program.
2. Manufacture Precast Components for the project in a plant certified in the National Precast Concrete Association's (NPCA) Plant Certification Program.
3. Retain an independent testing or consulting engineering firm approved by the Engineer for Precast plant inspection. The basis for plant inspection shall be the National Precast Concrete Association Quality Control Manual or the Manual for Quality Control for Plants and Production of Precast and Prestressed Concrete Products. The above firm shall inspect the precast plant 2 weeks prior to and at 1-week intervals during production of materials for this project and issue a report, certified by a Registered Engineer that materials, methods, products, and quality control meet the requirements of the above quality control manuals.

B. The Precast Manufacturer shall have a recognized Quality Improvement Process installed at the manufacturing facility.

C. The Precast Manufacturer shall employ at least one Registered Professional Engineer at the manufacturing facility throughout the life of the project.

D. All concrete compressive strength testing shall be performed in a laboratory inspected by the CCRL of the National Bureau of Standards.

1.05 ENVIRONMENTAL REQUIREMENTS

A. Maintain materials and surrounding air temperature to minimum 50 degrees F prior to, during, and 48 hours after completion of masonry, grouting, or concreting work.

1.06 DEFINITIONS

A. Wet wells shall be watertight, precast reinforced air-entrained concrete structures.

B. Lift Station wet well shall be designed to ASTM C890 A8 live loading.

C. Honeycombed or retempered concrete is not permitted.

D. Precast manufacturer shall coordinate with manufacturer of access hatches to provide the required hatch opening dimensions and ensure proper reinforcing is obtained between and around hatch openings to provide the specified design loading requirements.

PART 2 - PRODUCTS

2.01 MATERIALS

A. Concrete: Concrete shall conform to ASTM C913 and as follows:

1. Compressive strength: 5000 psi minimum at 28 days
2. Air Content: 4 percent minimum.
3. Alkalinity: Adequate to provide a Life Factor, Az = Calcium Carbonate Equivalent times Cover over Reinforcement, no less than 0.35 for bases, risers and tops.
4. Cementitious Materials: Minimum of 564 pounds per CY.
5. Coarse Aggregates: ASTM C33. Sound, Crushed, Angular Granitic Stone only. Smooth or rounded stone shall not be used.
6. Fine Aggregates: ASTM C33. Free from organic impurities.
7. Chemical Admixtures: ASTM C494. Calcium Chloride or admixtures containing calcium chloride shall not be used.
8. Air Entraining admixtures: ASTM C260.

B. Reinforcing: Reinforcing steel shall be ASTM A615 grade 60 deformed bar, ASTM A82 wire or ASTM A185 welded wire fabric.

C. Lifting Loops: Lift loops shall be ASTM A416 steel strand. Lifting loops made from deformed bars shall not be allowed.

D. Butyl Rubber Sealant shall conform to Federal Specification SS-S-210A, AASHTO M-198, Type B - Butyl Rubber and as follows: maximum of 1% volatile matter and suitable for application temperatures between 10 and 100 degrees F.

E. Butyl Rubber with Bentonite Sealant shall conform to Federal Specification SS-S-210A, ASTM D-297, and containing no asphaltics as follows: maintaining 99% solids with a maximum of 1% volatile matter and suitable for application temperatures between 5 and 125 degrees F.

F. Epoxy Gels: Epoxy Gels used for interior patching of wall penetrations shall be a 2-component, solvent-free, moisture-insensitive, high modulus, high-strength, structural epoxy paste adhesive meeting ASTM C-881, Type I and II, Grade 3, Class B and C, Epoxy Resin Adhesive.

2.02 COMPONENTS

A. Precast Component Fabrication and Manufacture shall be as described in this paragraph and as described in the paragraphs for the specific components.

1. Precast Manufacturing: Precast Structures shall be manufactured in conformance with ASTM C913. Wall and inside slab finishes resulting from casting against forms standard for the industry shall be acceptable, except form ties through the wall of the product are not allowed. Exterior slab surfaces shall have a float finish. Small surface holes, normal color variations, normal form joint marks, and minor depressions, chips and spalls will be tolerated. Edges may be tooled. Dimensional tolerances shall be those set forth in the appropriate References and specified below.

2. Joints: Joints surfaces for joints between Precast Structure Components shall be keyways or tongue and grooves manufactured to the joint surface design and tolerance requirements of ASTM C913.

3. Lift Inserts and Holes: If used for handling Precast Structures, lift holes and inserts shall be sized for a precision fit with the lift devices, shall not penetrate through the precast structure wall, and shall comply with OSHA Standard 1926.704.

B. Precast Base Sections: Base sections shall have the base slab cast monolithically with the walls or have an approved galvanized or PVC waterstop cast in the cold joint between the base slab and the walls.

C. Precast Riser Sections: The Minimum Lay Length of Precast Riser Sections shall be 36".

D. Precast Top Sections: Flat Slab Top Sections shall meet or exceed the design loading requirements of the respective structures as specified in paragraph 1.03, B.8 above. Transition Top Sections shall provide for transition to other diameter risers, cones, and flat slab top sections with a joint equal to that of a riser section. Venting of top sections shall be as shown on the details.

E. Pipe to Manhole Connectors: Pipe to Manhole Connectors shall conform to ASTM C923. On large diameter flexible pipes, provisions for control of the pipe OD to within the tolerances of the connector shall be made.

F. Joint Sealing Materials: Joints shall be sealed internally between the tongue and the groove and additionally around the external perimeter of the joint. Sealants are as follows:

1. External Seals shall consist of a cross-linked, high-density polyethylene membrane, Riser-Wrap™ or equal, no less than 1/16" thick and 6" wide applied per the manufacturer’s instructions to the outside perimeter of the

joint.

2. Joints with a perimeter greater than or equal to 18' shall be internally sealed with Butyl Rubber/Bentonite Sealant.
3. Joints with a perimeter less than 18' shall be internally sealed with Butyl Rubber Sealant.

G. Hatches: Hatches and doors, frames, and grate to be provided as equal to those shown on the precast structure details. Material shall be stainless steel or aluminum as conforming to details per application. For dimensions of castings see precast top details. Hatches shall have a load capacity of 300 psf minimum. Hatches shall be provided by Halliday Products, Inc., WACO Products, Inc., or USF Fabrication, Inc.

H. Lifting Devices: Lifting devices complying with OSHA Standard 1926.704 for handling the Precast Components shall be provided by the Precast Manufacturer. The design of lifting devices shall comply with ASTM C913, paragraph 5.8 standards.

I. Liners: Where shown on the plans, the interior of the precast structure shall be lined with an epoxy system (TNEMEC Company epoxy system or approved equal). The liner shall be installed in accordance with the recommendations of the liner manufacturer.

1. Epoxy system: TNEMEC Company epoxy system; Equal products may be submitted that do not change the generic description, solids by volume and the number of coats. ASTM performance criteria must accompany the submittal and all test reports submitted must meet and exceed the basis of design.

   Surface Preparation – Allow new concrete to dry for 28 days. Verify dryness by testing for moisture. Moisture content should not exceed 3 lbs. per 1,000 sq. ft. Abrasive sweep blast to a CSP 5 minimum. Prior to painting the substrate must be clean, dry, and free of all contaminants.

   1st Coat – Tnemec Series 218 applied at a full skim coat at 1/16” on average
   2nd Coat – Tnemec Series 436 applied at 80 mils

   The product shall have a material warranty period of 5 years against penetration of hydrogen sulfide gas and sulfuric acids.

J. Ladders: If shown on Precast Structure Details, fixed ladders shall be provided in rectangular structures greater than 8' deep in accordance with all OSHA requirements. Ladders are not required for rectangular structures 8' deep and less.

2.03 CONFIGURATION

A. Precast Concrete Structures are to be constructed as specified.

B. The number of joints is to be minimized. Use no more than 2 sections up to 8' depth and no more than 1 additional section for each 4' of depth.

PART 3 – EXECUTION

3.01 EXAMINATION

A. Inspect precast components prior to unloading from the delivery truck.

3.02 PREPARATION

A. Product Delivery, Storage, and Handling: Coordinate delivery with the manufacturer, handle and store the Precast Components in accordance with ASTM D891 and the manufacturer's recommendations using methods that will prevent damage to the components and their joint surfaces.

3.03 PLACING PRECAST CONCRETE SECTIONS

A. Excavate to the required depth and remove materials that are unstable or unsuitable for a good foundation. Prepare a level, compacted foundation extending 6" beyond the precast base and follow ASTM C891 excavation standards.

B. Set base plumb and level, aligning pipe opening with pipe invert.

C. Thoroughly clean bells and spigots to remove dirt and other foreign materials that may prevent sealing. Unroll the Butyl Sealant rope directly against base of spigot. Leave prospective wrapper attached until sealant is entirely unrolled against spigot. Do not stretch. Overlap from side to side - not top to bottom.

D. Set risers and tops, aligning internal wall surfaces, so that proper alignment is achieved, taking particular care to clean, prepare and seal joints.

E. When recommended by the manufacturer, fill the void between horizontal joint surfaces with a sand cement grout around the outside perimeter.

F. After joining precast sections, apply the butyl sealant sheet around the outside perimeter of the joint.

G. Lift Holes leaving less than 2" of wall thickness shall be plugged from the outside using a sand cement mortar. Lift Holes penetrating the wall shall be additionally sealed with an interior application of an epoxy gel 1/8" thick extending 2" beyond the penetration.

H. Perform the final finishing to the precast interior by filling all chips or fractures greater than 1/2" in length, width or depth and depressions more than 1/2" deep in inverts with a sand cement mortar. Grout joints according to Manufacturers Specifications. Clean the interior of the precast structure, removing all dirt, spills,

or other foreign matter.

END OF SECTION

SECTION 11200
WATER DISTRIBUTION SYSTEM

A. SCOPE

Under this heading shall be included installation of the water distribution system as shown on the plans and as specified herein. The Contractor shall comply with all local codes and regulations of local utilities. He shall coordinate work necessary for the completion of utilities with local utility companies and cooperate with the companies as required.

B. PIPING MATERIALS

Except where specifically noted on the Plans, the following types of NSF approved pipe shall be used:

1. Ductile Iron Pressure Pipe
   Ductile Iron pipe shall be manufactured according to ANSI/AWWA C151/A21.51 and shall be Class 350 minimum.

   a) Lining for ductile iron pipe and fittings shall be a cement mortar lining meeting the ANSI/AWWA C104/A21.4 for standard thickness lining. After cement lining, the interior of the pipe shall be given a coat of approved bituminous material in accordance with ANSI/AWWA C104/A21.4.

   b) Exterior coating shall be an approved bituminous coating one mil thick unless otherwise shown and/or specified.

   c) Rubber gasket joints shall conform to ANSI/AWWA C110/A21.11, push-on type, unless otherwise shown on the plans.

   d) Piping shall be manufactured by U.S. Pipe & Foundry Co., American Cast Iron Pipe Co., or McWane Corporation.

   e) All DIP to be wrapped with AWWA C105 polyethylene encasement (polywrap).

   f) To be installed per AWWA C600.

2. Ductile Iron Fittings
   a) Fittings for pipe 6” in diameter or larger shall conform to ANSI/AWWA C111/A21.11 and shall be rated for working pressure of not less than 250 psi.

   b) Fittings shall be cement lined in accordance with ANSI/AWWA C104/A21.4.

   c) Fittings shall be furnished with a bituminous outside coating.

d) Fittings shall be mechanical joint unless otherwise specified in the plans.

e) Fittings shall be provided by pipe manufacturer.

3. Retainer Glands

a) Retainer glands for connection to existing water lines shall be Megalug type as manufacturer by EBAA iron or approved equal.

b) Retainer glands shall be rated at a working pressure of 250 psi, minimum.

4. PVC Pipe
   a) All PVC pipe shall have integral belled ends for push-on type jointing and shall conform to AWWA C 900.

   b) Unless shown otherwise on the job specific drawings, pipe shall have a Standard Dimension Ratio (SDR) of 21 and shall be capable of withstanding a working pressure of 200 PSI.

   c) Pipe shall be supplied in minimum lengths of twenty (20) feet.

   d) All fittings shall be ductile iron meeting the requirements of AWWA C110 or AWWA C153 with a minimum working pressure of 250 PSI. Fittings shall be furnished with bituminous outside coating. Special adapters shall be provided as recommended by the manufacturer to adapt the PVC pipe to mechanical jointing with cast or ductile iron fittings or valves.

   e) Each piece of pipe shall be stamped “NSF Approved”.

   f) Installation to conform to AWWA C605.

5. HDPE Pipe
   a) HDPE Pipe 2” and smaller shall be manufactured according to AWWA C901 and ASTM D 3035 in a plant capable of providing continuous quality control through inspection. Pipe shall be DR 9 unless otherwise specified on the plans and shall contain no recycled compounds other than resin of the same specification from the manufacturer’s own plant and same raw material.

   b) HDPE Pipe 3” and larger shall be manufactured according to AWWA C906 and ASTM F 714 in a plant capable of providing continuous quality control through inspection. Pipe shall be DR 11 (DIPS) unless otherwise specified on the plans and shall contain no recycled compounds other than resin of the same specification from the manufacturer’s own plant and same raw material. Pipe shall be

manufactured from PE 4710 high-density polyethylene resin meeting ASTM D3350 with cell classification PE445574C.

c) Fittings shall conform to requirements of AWWA C901 for sizes 1/2" to 2" and to AWWA C906 for sizes 3"-54".

d) Polyethylene pipe and fittings shall be made from resin meeting the requirements of the Plastic Pipe Institute as PE 3608 and the requirements of ASTM D 3350. Butt fusion fittings shall have a manufacturing standard of ASTM D 3261. Molded and fabricated fittings shall have a pressure rating equal to that of the pipe. All fittings shall be suitable for use as pressure conduits and have a nominal burst value of three and one-half times the working pressure rating of the fitting.

e) Pipe and fittings shall be joined using butt fusion. The butt fusion procedures shall be in accordance with the manufacturer. The fusion equipment operator shall receive training using the recommended procedure. The contractor shall be responsible for verifying that the fusion equipment is in proper operating condition and that the operator has been properly training within the past 12 months. The fusion equipment will be equipped with a datalogger. Records of the welds shall be maintained for five (5) years. Fusion beads shall not be removed.

f) HDPE pipe and fittings shall be provided by one common manufacturer.

g) Pipe and fittings shall be manufactured by ISCO, JM Eagle, or approved equal.

h) Installation of HDPE pipe to conform to AWWA C906.

6. Copper Pipe

a) Water main service piping material for services 1" and smaller shall be Type K soft copper conforming to ASTM B-88. Couplings for tubing shall have compression connections.

b) Soldered joints used anywhere in the installation shall utilized "lead free" solder and flux containing not more than 0.2% lead.

C. WATER SYSTEM APPURTENANCES

1. Gate Valves
   a) Gate Valves shall be located as shown on the plans.

   b) All valves shall be NSF/ANSI 61 certified and constructed from materials conforming to AWWA C509.

c) All valves shall be taken from one manufacturer and similar sizes shall have interchangeable parts.

d) Gate Valves 3” to 12” in size shall be resilient-seated with a non-rising stem.

e) Valves shall be provided with a 2” square operating nut and shall be right hand closed valves.

f) All internal and external surfaces shall be coated with epoxy to a minimum thickness of 8 mils and meeting the requirements of ANSI/AWWA C550. Valve disks shall be coated with a rubber material conforming to AWWA C509 so that there shall be no metal-to-metal contact when the valve is in the fully closed position.

g) Gate valves shall be designed for a working pressure of not less than 150 psig and shall take full pressure on either face. Valves shall by hydrostatically tested in accordance with AWWA C509.

h) Valves shall be manufactured by Mueller Co., American-Darling Corp., or M & H Valve.

2. Check Valves

a) Check valves shall be non-slam, swing check valves by Surgebuster or pre-approved equal, with AWWA C508 ductile-iron body, 200-psi minimum working pressure, fusion-bonded epoxy interior and exterior coating (AWWA C550), stainless-steel/bronze internals, and a short-stroke, disc-accelerator mechanism designed to prevent slam and minimize water hammer. Valves shall have a full-access cover, flanged ends per ANSI B16.1 Class 125/250, and a resilient seat compatible with potable water (EPDM or nitrile). The valve shall fully close before reverse flow develops and shall be factory hydrostatically tested per AWWA requirements.

3. Butterfly Valves

a) Butterfly valves shall conform to AWWA C504 or C516 as indicated, with a ductile-iron body, stainless-steel shaft, and resilient-seated disc suitable for potable water service. Valves shall have fusion-bonded epoxy coating inside and out per AWWA C550, be rated for a minimum working pressure of 150–200 psi, and be furnished with flanged, mechanical-joint, or wafer/lug ends as shown on the plans. Discs shall be rubber-seated or bonded for bubble-tight shutoff in both directions, and operators shall be gear-operated (buried or above-grade) with position indicators and mechanical stops. All valves shall be NSF/ANSI 61 certified,

factory hydrostatically tested per AWWA requirements and manufactured by DeZurik or pre-approved equal.

4. Hydrants
   a) Fire hydrants shall be manufactured in accordance with the requirements of AWWA C502 for 200 PSI working pressure. The main valve seat opening shall be not less than 4-1/2 inches. The hydrant shall be equipped with one 4-1/2" steamer nozzle and two 2-1/2" hose nozzles. Nozzle caps shall be chained to the hydrant.

   b) Hydrants shall be compression type, left opening, closing with line pressure. The direction of opening shall be cast into the head of the hydrant.

   c) The design shall be for a dry barrel, non-freeze hydrant with an automatic drain mechanism upon valve closure.

   d) Operating nut shall be a 1-1/2" pentagon along with hose and pumper nozzle operating nuts.

   e) Hydrants shall be equipped with a breakaway feature at the ground line which allows the above ground section to be broken off in an accident without damage to the main valve, which shall remain closed. Depth of bury shall match the depth of the water main installation so that the breakaway flanges are at or near the ground level.

   f) Fire hydrants shall be Mueller Super Centurion 250, or M&H Model 129. Hydrant paint color shall be per the Owner's standard.

5. Tapping Sleeves and Valves

   a) Tapping sleeves shall be manufactured from ductile iron or stainless steel. They shall be flanged face and drilled per ANSI B16.1, with a standard tapping flange.

   b) Tapping sleeve shall meet minimum working pressure requirements of 200 psi.

   c) All tapping sleeves shall include a test plug. Tapping sleeves are to be water pressure tested for leaks through the test plug prior to tapping. The test shall be held for a period of not less than 30 minutes at 200 psi or as directed by the Engineer or Field inspector.

   d) Tapping valves shall have a mechanical joint end connection with a tapping flange. The flanged end shall have a raised face to match tapping sleeve outlet.

   e) All taps shall be "wet" taps.

6. Corporation Stops

    a) A Corporation stop shall be provided at each tapped point required for 3/4" – 1" water services.

    b) Corporation stops shall be manufactured and tested to ANSI/AWWA C800 Standards. They shall be ball type with compression connection.

    c) Corporation stops may be manufactured by Mueller, Ford, or approved equal and shall be suitable for the type of pipe being tapped.

7. Curb Stops
    a) Curb stops shall be manufactured and tested to ANSI/AWWA C800 standard.

    b) Curb stop shall be ball type blow-off with compression connection and shall be provided with a meter swivel.

    c) Curb stops shall be manufactured by Mueller, Ford, or approved equal.

8. Air Release Valves
    a) Air Release valves shall be dual operation valves to allow air to escape when the pipeline is being filled and allow air to enter when the pipeline is being emptied.

    b) The valves shall be in full accordance with AWWA C512 with a 200 psi minimum working pressure.

    c) Valves less than 3" in size shall have threaded inlet connections and valves 4" and larger shall have flanged inlets.

    d) All installations shall include an isolation valve and union to allow for removal and maintenance while the main is in service.

    e) Air Release Valves may be manufactured by Crispin, DeZurik/APCO, GA Industries, or approved equal.

9. Wet Valve Insertion
    a) Provide materials and equipment for installation of a permanent valve in an existing main with no interruption of flow or reduction of line pressure. The assembly shall be capable of forming a pressure-tight seal around the exterior of the pipe in which flow is to be sealed.

    b) The installation shall be sufficient for line pressures up to 150 psi, minimum.

c) The resulting valve shall be a resilient seated gate valve or wedge valve with a square operating nut for future use.

d) The valve body and pipe mounting body shall be constructed of ductile iron or stainless steel.

e) The valve shall have a resilient rubber seal around the gate or wedge that is capable of expanding to the inside diameter of the pipe.

f) The valve must be provided with ports for pressure testing of the pipe mounting body prior to cutting operations for installation of the valve.

g) Wet Valves shall be manufactured by Hydra-Stop (Insta-Valve), Advanced Valve Technologies (EZ Valve), or approved equal.

10. Couplings/Sleeves
    a) Couplings and/or sleeves shall be utilized to provide straight, transition or reducing connection of pipes of the same or different materials. The coupling or sleeve shall be utilized when connecting new mains to existing piping in the system or to join differing pipe materials utilized in new construction.

    b) The coupling or sleeve shall be approved for working pressures up to 150 psi, minimum and shall utilize a mechanical connection to prevent separation of the joint. The coupling or sleeve shall be recommended by the manufacturer for the pipe materials to be joined.

    c) Coupling bodies shall be fabricated from steel, ductile iron, or stainless steel and shall utilize an epoxy coating.

    d) Stiffener rings may be required for joining of HDPE piping – follow manufacturer recommendations.

    e) Couplings and/or sleeve may be manufactured by Romac Industries, JCM Industries or equal.

11. Meter Boxes
    a) Meter boxes and lids for 1” and 3/4” services shall be cast iron, approximately 20 inches long, 10-1/2 inches wide, and 16 inches deep. Alternatively, meter boxes may be oval heavy-duty plastic with cast iron lid.

    b) Meter boxes for 2” and greater services shall be constructed of cast iron or concrete with a cast iron lid or metal hatch. They shall be of sufficient size and depth to accommodate the meter for which they are intended.

12. Detection Tape

a) Detection tape shall be provided for non-metallic piping installed by open cut installation. The tape shall be installed 6 inches below the ground surface for the entire length of the trench.

b) Detection tape shall be 2 inches wide, of blue color, and have imprinted on the tape "Caution - Water Line Below." The tape shall be a printed foil warning tape encased in Mylar and shall be easily detected by electronic pipe locators.

13. Tracer Wire

a) Tracer Wire will be provided on all pipe installed. The wire shall be wrapped around the pipe or taped to the pipe at a minimum of 8’ intervals.

b) Tracer Wire shall be #12 copper or copper clad steel with HDPE or HMWPE jacket. The wire shall be blue to indicate Potable Water. No THHN will be allowed.

c) The contractor shall utilize a tracer wire approved for directional drilling use and shall follow the manufacturer’s recommendations for installation.

d) Splicing of wire shall be completed with moisture displacement connectors appropriate for use with the wire purchased.

e) Each section of tracer wire installed shall be successfully tested prior to contract completion.

D. SHOP DRAWINGS

Shop drawings shall be submitted on each manufactured item supplied under this Section along with other information as specified herein.

E. INSTALLATION

1. General

a) Pipe, fittings, valves, hydrants, and other accessories shall, unless otherwise directed, be unloaded at the point of delivery, hauled to and distributed at the site of the project by the Contractor. They shall at all times be handled with care to avoid damage. In loading and unloading, they shall be lifted by hoists or slid or rolled on skidways in such a manner as to avoid shock. Under no circumstances shall they be dropped. Pipe handled on skidways must not be skidded or rolled against pipe already on the ground. In distributing the material at the site of the work, each piece shall be unloaded opposite or near the place where it is to be laid in the trench. Coated pipe shall be handled in such a manner to minimize damage of the coating. Damaged coating shall be repaired.

b) Pipe shall be placed on the site of work parallel with the trench alignment and with bell ends facing the direction in which the work will proceed, unless otherwise directed. The interior of all pipe, fittings, and other accessories shall be kept free from dirt and foreign matter at all times. Valves and hydrants before installation shall be drained and stored in a manner that will protect them from damage by freezing.

c) Cutting pipe for inserting fittings, or closure pieces, shall be done in a neat and workmanlike manner without damage to the pipe.

d) Wherever necessary to deflect the pipe from straight line, whether in the vertical or horizontal plane to avoid obstruction, the degree of deflection shall not exceed the manufacturer's recommended maximum deflection.

e) No pipe shall be laid in water or when the trench condition or the weather is unsuitable for such work. Installation shall be in accordance with manufacturer's instructions.

f) All pipe and fittings shall be carefully lowered into the trench piece by piece by means of derrick, ropes, or other suitable tools or equipment in such a manner as to prevent damage to the pipe. Under no circumstances shall pipe or accessories be dropped into the trench. Before lowering and while suspended, tactile iron pipe shall be inspected for defects and rung with a light hammer to detect cracks. Any defective, damaged, or unsound pipe shall be rejected.

g) All foreign matter or dirt shall be removed from the inside of the pipe before it is lowered into its position in the trench, and it shall be kept clean by approved means during and after laying. Care shall be taken to prevent dirt from entering the joint space. At all times when pipe laying is not in progress, the open ends of the pipe shall be closed by approved means and no trench water shall be permitted to enter the pipe.

2. Inspections
   a) All piping, blocking and anchors, and gravel for fire hydrants shall be inspected by the city before being covered.

   b) Periodic inspections of the project will be performed by the City through completion to ensure that the project is constructed in accordance with the approved plans and meets the requirements established by the Georgia Erosion and Sedimentation Act and other applicable standards.

3. Warranty

The contractor shall warranty the installation against defects due to faulty materials and/or workmanship for a period of one year from the date of acceptance by the City. The contractor shall be responsible for repair of leaks or other failures due to materials or workmanship during the warranty period. It the City makes such repairs, the contractor shall be responsible for reimbursing the costs.

4. Ductile Iron Pipe
   a) Proper implements, tools, and facilities shall be provided and used by the Contractor for the safe and convenient prosecution of the work.

   b) Ductile Iron Pipe for use in open cut construction shall be installed per specification Section 02315 - Excavation, Trenching, and Backfill.

   c) Ductile Iron Pipe for use in jack and bore installations shall be installed inside the steel casing per detail(s) in the plans. The pipe joints through the casing shall be push-on unless otherwise specified in the plans or required to obtain proper thrust restraint due to a lack of space for thrust blocking.

   d) Ductile Iron Pipe for use in directional drilling shall be installed per specification Section 02540 – Utility Directional Drilling.

5. Hydrants
   a) Hydrants shall be set at such elevations that the connecting pipe will have the same depth of cover as the distribution mains. The connecting pipe shall be ductile iron pipe.

   b) The hydrants shall be set on a base of concrete not less than 6 inches thick and 18 inches square. The back of the hydrant opposite the pipe connection shall be firmly wedged by a poured-in-place concrete thrust block against the vertical face of the trench to prevent the hydrant from blowing off the line. The base of the hydrant shall be wrapped to prevent bond between thrust blocks and hydrants.

   c) Hydrants and valves shall have the interior cleaned of all foreign matter before installation. Not less than one cubic foot of broken stone shall be placed around the base of the hydrant.

   d) Contractor shall place a bag over the hydrant to indicate it is not in service until after the water main is put into service.

6. Water Service Connections
   a) Service lines shall be connected to 4 inch and larger mains with corporation stops. Connections to mains smaller than 4 inches shall be made with a rigid connection.

b) Minimum cover of 24 inches shall be provided until a short transition to 12 inches depth at the water meter.

c) Water service laterals shall be installed to the property line of all lots along streets and rights- of-way in which water main is constructed or to a distance of 5 feet from the building line for apartments, condominiums, or other uses besides subdivision lots, unless shown otherwise.

7. Thrust Restraint
   a) All plugs, caps, bends (11-1/4 degrees or greater), valve, hydrants, and tees subject to thrust loads shall be provided with thrust blocking, tie rods or a combination of the two. Thrust blocking shall be in accordance with the Thrust Blocking Detail shown on the Plans. Thrust blocking shall bear directly against the undisturbed soils and shall be made with concrete having a compressive strength of at least 2500 psi.

   b) Valves and fittings installed at the end of a line shall be restrained using thrust rods, Mega Lugs and a concrete deadman placed over the main, as indicated on the drawings.

   c) Valves installed on hydrant leads shall be rodded or positively coupled to the tee, in such a manner that the hydrant can be safely removed for repair by closing the valve.

   d) Thrust blocking should be so arranged that it will not interfere with reworking joints should such work become necessary.

   e) If the area for thrust blocking is over excavated beyond the dimensions required by the detail, additional concrete shall be provided to extend the thrust blocking to undisturbed earth at no additional cost to the Owner.

   f) If thrust blocking cannot be provided due to the location of surrounding utilities or lack of space in the right-of-way, pipe restraint shall be provided by the use of restrained joint piping as directed by the engineer at no additional cost to the owner.

8. Connections to Existing Water System
   a) The Contractor shall furnish necessary materials and perform all excavation, dewatering, shoring, backfilling, etc., necessary to make the connection of a new main to the existing water main.

   b) The Contractor shall notify the Engineer and Owner a minimum of 48 hours in advance of construction. The Contractor shall be responsible for coordinating his construction with the Water Department.

c) Any installation of tapping valves or insertion valves on existing live water mains shall be required to successfully pass a pressure test of the tapping sleeve and/or insertion valve pipe mounting body prior to cutting of the live main.

9. Protection of Water Supply Systems
~~See Section 02221, Paragraph 13 for protection of Water Supply Systems~~ **NOT USED**

F. JACK AND BORE

1. In locations shown on the plans, the water main shall be installed in steel casing pipe. The casing shall be plain steel, not less than 0.250-inch wall thickness and approximately 6" in diameter greater than the OD of the carrier pipe. For installations across DOT roadways or railroads, the casing size and thickness shall be per the requirements of the DOT or railroad owner.

2. Installations shall be designed so that the carrier pipe can be removed and re-installed without damage to the casing.

3. Casing spacers and end caps shall be utilized as detailed in the plans.

G. DAMAGE TO WATER SYSTEM

Damage to any part of the water system by the Contractor, or subcontractors, which is repaired by Water Department forces, shall be charged to the Contractor on the basis of time and material, plus 10 percent for overhead and administration.

H. HYDROSTATIC PRESSURE TESTING

General:

Hydrostatic pressure testing shall be performed on all newly installed potable water mains, valves, hydrants, fittings, and appurtenances after installation is complete and all thrust restraint systems have reached adequate strength. Testing shall comply with AWWA C600 (ductile iron), AWWA C605 (PVC), or AWWA C906/ASTM F714 (HDPE), as applicable. The Contractor shall furnish all labor, equipment, gauges, plugs, pumps, temporary bulkheads, restraints, water, and disposal methods. No pipe shall be placed into service until it has passed both the pressure test and leakage test.

Preparation:

Test Sections:

- Maximum test section length: 1,500 ft unless otherwise approved by the Engineer.
- All valves within the test section shall be fully open.
- Temporary restraining devices shall be installed at caps, plugs, dead-ends, and connections.

Filling the Main:

- Fill pipe slowly to prevent surge, allowing air to escape.

- Provide taps or connections at all high points to purge air.
- Contractor shall remove all trapped air; failure due to air entrapment shall be the Contractor's responsibility.

Soaking Period

- After filling, allow the main to stand at normal operating pressure for a minimum of 2 hours (6–24 hours preferred for PVC or HDPE). This allows pipe expansion to stabilize.

Test Pressure:

Apply a hydrostatic test pressure of 150 psi or 1.5 times the working pressure, whichever is greater, as measured at the lowest elevation in the test segment.

- DI pipe: per AWWA C600
- PVC pipe: per AWWA C605
- HDPE pipe: per AWWA C906 / PPI TR-46

Duration

The test pressure shall be maintained for a minimum of 2 hours.

Test Equipment Requirements

Pressure Gauges

- Calibrated, liquid-filled gauge
- Dial diameter ≥ 4 inches
- Accuracy: ±1 psi
- Full-scale range: 0–300 psi (or appropriate for test pressure)

Pumps

- Capable of maintaining steady pressure
- Equipped with isolation valves and backflow protection devices

Bulkheads, Plugs, and Fittings

- Pressure-rated
- Mechanically restrained
- Tested and approved by the Engineer prior to testing

Chlorinated water shall not be discharged to streams or wetlands without neutralization using sodium thiosulfate or Engineer-approved dechlorination method.

Documentation

Submit the following to the Engineer:

- Test pressure graph or log
- Duration of test
- Make-up water volume

- Gauge calibration certificates
- Notes on any failures and corrective measures
- All test records become part of the project closeout documents.

I. LEAKAGE TESTING

Leakage Test

- After the pipe passes the pressure test, conduct a leakage test.
- Allowable Leakage Formula (AWWA C600/C605)
- Maintain the test pressure (150 psi) for 2 hours.
- Measure the amount of make-up water required to maintain pressure.
- Compare to allowable leakage.

Acceptance Criteria

- Leakage shall not exceed the calculated allowable value.
- Zero visible leaks are permitted at joints, fittings, valves, or hydrants.
- Leaks shall be repaired and the section retested until passing.

Testing Special Appurtenances

- Hydrant valves shall be partially opened to pressurize internal hydrant barrel.
- Hydrants shall not be used as test bulkheads.
- Test section valves shall be fully open.
- Valves shall be individually tested for proper operation after the main test.

Tapping Sleeves & Wet Taps

- The tapping sleeve assembly shall be field pressure-tested to 200 psi for 30 minutes before tapping.
- Pressure test shall be performed through the sleeve test port.

Failure, Repairs, and Retests

The test is considered a failure if:

- Leakage exceeds allowable
- Pressure drop cannot be maintained
- Visible leakage occurs at any joint or appurtenance
- Air is found in the line

Repairs

- All defects shall be corrected by the Contractor at no cost to the Owner.
- Cutting the pipe to repair a joint or leak is prohibited unless approved by the Engineer.
- Additional thrust restraint may be required if the main shifts during testing.

Retesting

- After repairs, the full sequence (soaking, pressure test, leakage test) shall be repeated.
- No additional payment shall be made for retesting.

Water Disposal

Contractor shall dispose of test water in accordance with:

- Georgia EPD rules
- Local ordinances
- Stormwater pollution control requirements (NPDES/GSWCC)

J. CLEANING AND DISINFECTION OF NEW MAINS

All water mains must be cleaned, disinfected, and the water passing through them must be shown safe by laboratory tests results before the system can be placed in service. Disinfection of all water lines shall be in accordance with AWWA C651. Approved methods for the accomplishment of disinfection are as follows:

1. Clean the interior of all pipes by brushing, swabbing, or washing out all debris before laying. Stop up all branches and other openings with plugs until either capped or connected.

2. Install a sufficient number of hydrants to give representative sampling on the newly installed lines. The hydrants should be at least 18 inches higher than main and must discharge toward the ground.

3. Flush the new pipelines until the water runs clear at the end of all mains and laterals. This should be done after the pressure test and before disinfection. Each valved section of the newly laid pipe should be flushed separately with potable water.

4. Disinfect the pipelines with chlorine. The preferable point of application of the chlorinating agent is at the beginning of the pipeline extension, or any valved section of it, and through a corporation cock inserted in the horizontal axis of the newly laid pipe during the application of the chlorine.

5. Partially open hydrants or valves on the newly laid line under treatment to prevent the building up of water pressure. Continue treatment until the water flowing from the hydrants at the far end of the main contains sufficient residual chlorine to develop a deep red color (50 parts per million) when orthotolidine reagent is added to a sample of water. Stop the flow of water and chlorine by closing all openings. The chlorine residual after 24 hours shall be not less than 25 parts per million (ppm).

6. During flushing of the line, do not allow heavily chlorinated water to flow directly into waters of the state or wetlands. Employ aeration or de-chlorination at the direction of the Engineer to prevent environmental damage at no additional cost to the Owner.

7. Allow the treated water to remain in the pipeline for at least 24 hours following which period the main must be thoroughly flushed until all the heavily chlorinated water has been removed. Test water samples with orthotolidine reagent to make sure all chlorine has been flushed out or until the concentration of chlorine in the newly laid lines is no higher than that of a sample taken on the supply line.

8. Chlorine products for disinfecting water pipes are available in several forms as follows:
   a) Liquid chlorine is available in 100- and 150-pound steel cylinders.

   b) High test calcium hypochlorite is a powder and is available in 4-pound tins and 100-pound drums. The chlorine content is approximately 65 percent (comparable to commercial products known as "Perchloron", "H.T.H.", "Maxochlor", etc.)

   c) Chlorinated lime is a powder and is available in 12-ounce cans and 110-pound drums. The chlorine content varies from 24 percent to 33 percent. Chlorinated lime is also known as chloride of lime and as bleaching powder.

9. Liquid chlorine may be applied to water mains by means of a solution feed chlorinating device or the gas may be fed directly from the cylinder provided it is equipped with proper devices for regulating the rate of flow and the effective diffusion of gas within the pipe. The former method is preferable to the direct feed method.

10. High test calcium hypochlorite or chlorinated lime must be prepared as a water mixture for introduction into the water mains. Either powder should first be made into a paste and then thinned to about one percent chlorine solution. This requires the following proportions of powder to water:

    a) Prepare a one percent chlorine solution in a wooden or plastic barrel and permit solids to settle. Apply the clear supernatant solution to the main though a rubber hose either by gravity, siphonage, injection, or by pumping.

    b) The application of small amounts of dry hypochlorite or chlorinated lime to each length of pipe as it is laid <u>will not be permitted</u>.

11. After the new lines have been properly cleaned, sterilized, and flushed, the Contractor shall send samples of the water to a state approved independent laboratory. Two samples shall be taken 24 hours apart from locations selected by the Engineer.

12. The Engineer will arrange for the regulatory agency inspection. Lines will not be placed in operation until agency approval and Engineer directs Contractor to do so.

13. A hydrant flow test will be performed after the lines are placed in service as directed by the Engineer. Results of the test will be reported in writing to the Engineer.

K. ABANDON EXISTING UTILITIES

1. All existing lines ≤6" to be abandoned shall be cut and plugged. All existing lines greater than 6" to be abandoned shall be cut and plugged, unless they are to remain underneath a GDOT roadbed, in which case they shall also be filled with grout.

2. All existing hydrants on water mains to be abandoned shall be removed and returned to the City.

3. All existing valves on water mains to be abandoned shall have the valve box removed and the remaining hole shall be filled with soil, effectively burying the existing valve.

END OF SECTION

SECTION 15200
VALVES AND APPURTENANCES

PART 1 – GENERAL

1.01 SCOPE

A. Furnish all labor, materials, equipment and incidentals required and install complete and ready for operation all valves and appurtenances as shown on the Drawings and as specified herein.

B. All valves complete with pneumatic or manual operators as required shall be furnished by a single manufacturer and shall be coordinated with instrumentation and controls.

1.02 RELATED WORK

N/A

1.03 DESCRIPTION OF SYSTEMS

A. All of the equipment and materials specified herein are intended to be standard for use in controlling the flow of water, sludge, chemicals, etc., depending on the applications.

1.04 QUALIFICATIONS

A. All of the types of valves and appurtenances shall be products of well established reputable firms who are fully experienced, reputable and qualified in the manufacture of the particular equipment to be furnished. The equipment shall be designed, constructed and installed in accordance with the best practices and methods and shall comply with these specifications as applicable.

1.05 SUBMITTALS

A. Submit to the Engineer within 30 days after execution of the contract a list of materials to be furnished, the names of the suppliers and the date of delivery of materials to the site.

B. Complete shop drawings of all valves and appurtenances shall be submitted to the Engineer for approval in accordance with the requirements by Section 01300 and the General Conditions.

1.06 TOOLS

A. Special tools, if required for normal operation and maintenance, shall be supplied with the equipment.

PART 2 - PRODUCTS

2.01 GENERAL

A. All valves and appurtenances shall be of the size and type shown on the drawings.

B. All valves and appurtenances shall have the name of the maker and the working pressure for which they are designed cast in raised letters upon some appropriate part of the body.

2.02 GATE VALVES

All gate valves shall be NSF/ANSI 61 certified and constructed from materials conforming to AWWA C509. Gate valves shall be designed for a working pressure of not less than 200 psi and shall take full pressure on either face. Valves shall be hydrostatically tested in accordance with AWWA C509.

Gate Valves 3” to 12” in size shall be resilient-seated with a non-rising stem. Valves shall be provided with a 2” square operating nut and shall be right hand closed valves. The valves shall be taken from one manufacturer and similar sizes shall have interchangeable parts.

All internal and external surfaces shall be coated with epoxy to a minimum thickness of 8 mils and meeting the requirements of ANSI/AWWA C550. Valve disks shall be coated with a rubber material conforming to AWWA C509 so that there shall be no metal to metal contact when the valve is in the fully closed position.

Valves shall be manufactured by Mueller Co., American-Darling Corp., or M & H Valve.

2.03 VALVE BOXES

A. All buried valves shall have cast iron two- or three-piece valve boxes with cast iron covers. Valve boxes shall be provided with suitable heavy bonnets and extend to such elevation at or slightly above the finished grade surface as directed by the Engineer. The barrel shall be one or two-piece, screw type, having 5-1/4-inch shaft. Covers shall have "WATER" cast into the top for all water mains and "DRAIN" cast into the top of all drain lines. All valves shall have actuating nuts extended to within six inches of the top of valve box cover.

B. Valve boxes shall be provided with concrete base and valve nameplate with suitable anchors for casting in concrete. Nameplate shall be 3-inch diameter bronze disk with raised lettering 1/8-inch high as shown on the Drawings and manufactured by Shiedow Bronze Corporation, Kingwood, W. VA; or equal.

PART 3 - EXECUTION

3.01 INSTALLATION

A. All valves and appurtenances shall be installed in the locations shown, true to alignment and rigidly supported. Any damage to the above items shall be repaired to the satisfaction of the Engineer before they are installed.

B. After installation, all valves and appurtenances shall be tested at least 2 hours at the working pressure corresponding to the class of pipe, unless a different test pressure is specified. If any point proves to be defective, it shall be repaired to the satisfaction of the Engineer.

C. Flanged and mechanical joints under water or exposed to weather shall be made with type 304 stainless steel bolts, nuts and washers.

D. Valve boxes with concrete bases shall be installed as shown on the Drawings. Mechanical joints shall be made in the standard manner. Valve stems shall be vertical in all cases. Place cast iron box over each stem with base bearing on compacted fill and top flush with final grade. Boxes shall have sufficient bracing to maintain alignment during backfilling. Knobs on cover shall be parallel to pipe. Remove any sand or undesirable fill from valve box.

3.02 INSPECTION AND TESTING

A. Completed pipe shall be subjected to hydrostatic pressure tests for four (4) hours at full working pressure. All leaks shall be repaired and lines retested as approved by the Engineer. Prior to testing, the gravity pipelines shall be supported in an approved manner to prevent movement during tests.

END OF SECTION

SECTION 70001
CHEMICAL FEED SYSTEM

A. SCOPE

Under this heading shall be included the installation of the chemical feed pumps as shown and described on the plans and as specified herein. The Contractor shall comply with all local codes and regulations of local utilities. They shall coordinate all work necessary for the completion of utilities with local utility companies and cooperate with the companies as required.

B. REFERENCES

Hydraulic Institute: Current Standards.

1. HI 7.1-7.8 – Reciprocating Metering Pumps

C. SHOP DRAWINGS/SUBMITTALS

Submittal data shall be provided to show compliance with these specifications, plans or other specifications that will influence the proper operation of the pump(s).

Standard submittal data for approval must consist of:

1. Pump Performance Curves.
2. Pump Outline Drawings.
3. Station Drawing for Accessories.
4. Electrical Motor Data.
5. Typical Installation Guides.
6. Technical Manuals and Parts List.
7. Printed Warranty.
8. Management system certificate ISO 9001.
9. Manufacturer's Equipment Storage Recommendations.
10. Manufacturer's Standard Recommended Start-Up Report Form.

Lack of the above requested submittal data is cause for rejection.

D. QUALIFICATION REQUIREMENTS

The manufacturer shall provide data on alternate equipment manufacturer's experience. Only Manufacturers with 10 or more years of experience who have furnished at least 5 similar projects shall be considered.

E. MATERIALS/PRODUCTS

The following chemical feed pumps are to be provided and installed:

Chemical Feed Pumps

Pump: Grundfos **DDE 6-10 P-PV/T/C-X-31I003BG**
Quantity: Eight (8) – four for Chlorine and four for Fluoride.
Voltage – 1 x 100-240 V

See attached technical data sheets and pump curves at the end of this specification Section.

Chemical Feed Piping:

Chemical metering pump discharge lines to be ¼-inch OD PVDF with internal diameter approximately 0.17 inch, rated for a minimum working pressure of 250 psi at 73°F, NSF/ANSI 61 and 372 certified, and compatible with sodium hypochlorite and fluoride solutions. Tubing shall run from the chemical feed pump discharge to a local transition assembly, where it shall connect to ½-inch Schedule 80 PVC chemical injection piping and injection quill. Standard low-pressure peristaltic pump tubing shall be limited to the pump head only and shall not be used as distribution piping

Provide a vent/return hose to carry air and off-gassed bubbles from the deaeration port out of the pump head and back to the chemical tank.

Chemical Feed Valves:

Each chemical feed pump shall be equipped with a full-port ball isolation valve. Valves to manufactured by Hayward Flow Control or approved equal.

Each combined feed line (two chlorine lines and two fluoride lines) to be equipped with:

- One factory-assembled back-pressure / anti-siphon valve with PVC, CPVC, PP, or PVDF body; PTFE diaphragm; EPDM or Viton seals; adjustable spring set for 20–60 psi nominal back-pressure (capable of up to 150 psi or more); rated for chemical service with sodium hypochlorite and fluoride, and NSF/ANSI 61 & 372 certified; compatible with chemical feed line size. Valves to manufactured by Hayward Flow Control, Walchem, Griffco, Pulsafeeder, or approved equal.
- A factory-set, field-adjustable pressure relief valve to protect the pumps and small-bore piping from overpressure. Valve shall be spring-loaded, direct-acting, and suitable for continuous chemical service. Wetted body and trim shall be PVC, CPVC, PP, or PVDF with PTFE diaphragm/seat and EPDM or Viton (FKM) seals, fully compatible with sodium hypochlorite and fluoride solutions and NSF/ANSI 61 & 372 certified. Minimum working pressure rating shall be ≥ 200 psi at 73°F. Relief setpoint shall be adjustable over a range of at least 25–150 psi, factory set to approximately 25–50 psi above normal operating backpressure as indicated on the Drawings. The relief discharge line shall be hard-piped or tubed back to the originating chemical storage tank with an air gap; discharge to floor drains or the building interior is not permitted. Valves to manufactured by Hayward Flow Control, Walchem, Griffco, Pulsafeeder, or approved equal.
- Provide a spring-loaded, non-slam check valve in each chemical feed discharge line downstream of the pump, backpressure/relief valves. Check valve shall be designed for low-flow chemical metering service and installed to prevent backflow from the process line into the chemical feed system and storage tank. Wetted components shall be PVC, CPVC, PP, or PVDF body, with PTFE seat and EPDM or

Viton seals, compatible with sodium hypochlorite and fluoride and NSF/ANSI 61 & 372 certified. Valve shall have a minimum working pressure rating of ≥ 200 psi at 73°F and cracking pressure suitable for low metering pump flows (typically 1–3 psi). End connections shall match the chemical feed line size and type (compression or FNPT as indicated). Valves to manufactured by Hayward Flow Control, Griffco, Pulsafeeder, or approved equal.

- Full-port ball isolation valve at the injection port connection.

Mounting Brackets & Panels

Each chemical feed pump shall be mounted on manufacturer-provided wall-mount bracket fastened to concrete or masonry walls at approximately 4–5 ft elevation for operator accessibility. Provide anti-vibration pads or rubber isolators to protect pumps. Provide a stainless steel, wall-mounted accessory panel adjacent to pumps for mounting isolation valves, backpressure/anti-siphon valves, relief valves, check valves, and tubing supports.

F. EXECUTION/INSTALLATION

1. GENERAL
   Perform installation in accordance with Contract Documents and Manufacturer's specifications.

2. DELIVERY, STORAGE AND HANDLING
   Deliver, store and handle products to site under provisions of the Contract & Specifications.

3. INSTALLATION EQUIPMENT
   Contractor shall furnish all tools, material, labor, and equipment necessary to install the chemical feed pumps.

4. START-UP
   After installation, pump start-ups shall be performed by the installing contractor under the supervision of the Manufacturer's authorized representative. Two (2) days of field service shall be provided by an authorized, factory-trained representative of the pump manufacturer. Services shall include, but not be limited to, inspection of the completed chemical feed installation to ensure that it has been performed in accordance with the manufacturer's instructions and recommendations, supervision of all field testing and activation of the Pump Manufacturer's Warranty. The test shall demonstrate to the satisfaction of the Owner that the equipment meets all specified performance criteria, is properly installed and anchored, and operates smoothly without exceeding the full load amperage rating of the motor. The Contractor shall be responsible for coordinating the required field services with the Pump Manufacturer.

5. FACTORY TRAIED SUPERVISION
   The contractor shall procure a factory-trained technician to inspect equipment prior to putting the equipment into operation.

   Contractor to provide point to point test of all wiring.

   Functional test of all equipment alarms and controls.

6. WARRANTY
   When installed in accordance with all the provisions of this section, related sections and the supplier's installation manual, the warranty on the Monitoring and Control equipment shall be 12 months. The warranty period shall start from the date of equipment delivery to the job site.

GRUNDFOS

Company name:
Created by:
Phone:

Date: 02/10/2025

Qty.	Description
1	**DDE 6-10 P-PV/T/C-X-31I003BG**



Note! Product picture may differ from actual product

Product No.: 97721114

The SMART Digital DDE is a compact positive displacement, diaphragm dosing pump with variable-speed drive (stepper motor) and intelligent control electronics with minimum energy consumption.

The SMART Digital Dosing series operates at full stroke length to ensure optimum accuracy, priming and suction, even for degassing liquids.

The duration of each discharge stroke varies according to the capacity set, resulting in optimum smooth and continuous discharge flow.

The click-stop mounting plate allows installation in three different positions without using any additional accessories. The dosing flow can be adjusted by means of an adjustment knob on a logarithmical scale from 0.1-100%.

The dosing head is composed of:
- Long lifetime and universal chemical resistant Full-PTFE diaphragm.
- Double ball valves for highest dosing accuracy.
- Deaeration valve for easy start-up.

Operation modes:
- Manual dosing from 0.1 to 100%.
- Pulse control (divisor function included).

Other features:
- 100 % key (max. capacity), e.g. for deaearation.
- Operation mode switch key between manual and pulse.
- Status LEDs for pulse and manual.
- Mechanical lock to protect the pump against unauthorised access.

Signal- Inputs/outputs:
- Input for pulse, external stop.
- Input for empty tank signal.

Installation set includes:
- Foot valve (without level switch).
- Injection unit.
- 6 m PE discharge hose.
- 2 m PVC suction hose.
- 2 m PVC deaeration hose (4/6 mm).

Technical:

Max. Flow:	6 l/h
Min flow:	6.0 ml/h
Turn-down ratio:	1:1000
Approvals:	CE,CSA-US,NSF61,RCM
Valve type:	Standard
Maximum viscosity at 100 %:	50 mPas
Maximum viscosity in slow mode 50 %:	N/A mPas
Maximum viscosity in slow mode 25 %:	N/A mPas

GRUNDFOS

Company name:
Created by:
Phone:

Date: 02/10/2025

Qty.	Description	
1	Accuracy of repeatability:	5 %
	Materials:	
	Dosing head:	PVDF (Polyvinylidene fluoride)
	Valve ball:	Ceramic Al2O3
	Gasket:	PTFE
	Installation:	
	Range of ambient temperature:	32 .. 113 °F
	Maximum operating pressure:	145.04 psi PVC / 232 PSI PVDF ✓
	Type of inlet connection:	Hose
	Type of outlet connection:	Hose
	Installation set (Yes/No):	YES
	Installation type:	0,17x1/4" up to 7,5 l/h,16bar
	Max. Suction lift during operation:	6 m
	Max. Suction lift during priming:	2 m
	Liquid:	
	Pumped liquid:	Water
	Liquid temperature range:	32 .. 113 °F
	Selected liquid temperature:	68 °F
	Density:	62.29 lb/ft³
	Electrical data:	
	Power input P1:	19 W
	Mains frequency:	50 / 60 Hz
	Rated voltage:	1 x 100-240 V
	Enclosure class (IEC 34-5):	IP65 / TYPE 4X
	Length of cable:	1.5 m
	Power plug:	US plug
	Inrush current:	25A at 230V for 2ms
	Controls:	
	Control variant:	P
	Level control:	YES
	Pulse control:	YES
	Ext. Stop input:	Yes
	Output relays:	No
	Others:	
	Net weight:	4.65 lb
	Gross weight:	5.97 lb
	Country of origin:	US
	Custom tariff no.:	8413.50.0050

GRUNDFOS

Company name:
Created by:
Phone:

Date: 02/10/2025

97721114 DDE 6-10 P-PV/T/C-X-31I003BG

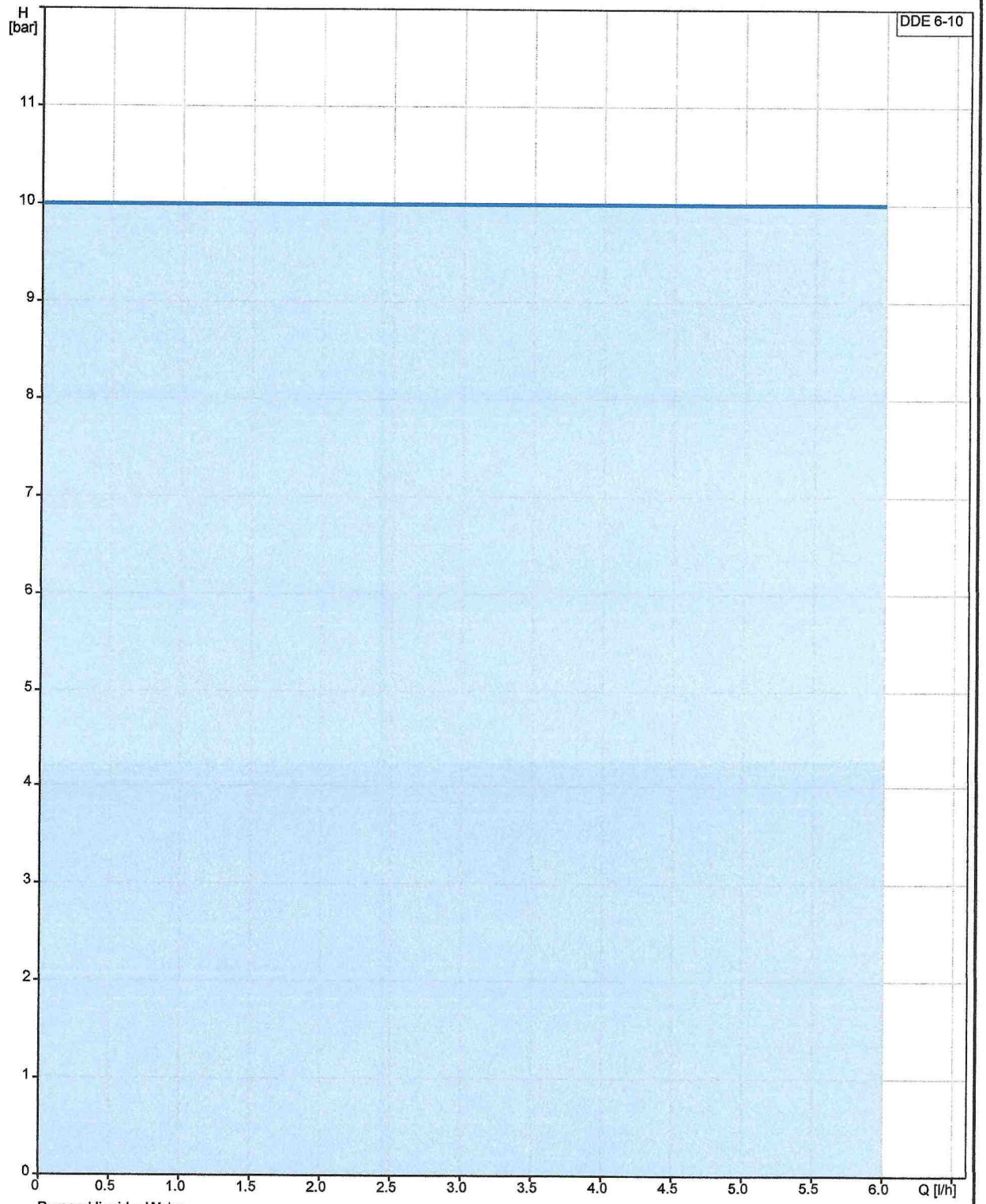

Pumped liquid = Water
Liquid temperature during operation = 68 °F
Density = 62.29 lb/ft³

GRUNDFOS

Company name:
Created by:
Phone:

Date: 02/10/2025

Description	Value
General information:	
Product name:	DDE 6-10 P-PV/T/C-X-31I003BG
Product No:	97721114
EAN number:	5710622712544
Technical:	
Max. Flow:	6 l/h
Min flow:	6.0 ml/h
Turn-down ratio:	1:1000
Approvals:	CE,CSA-US,NSF61,RCM
Valve type:	Standard
Model:	A
Maximum viscosity at 100 %:	50 mPas
Maximum viscosity in slow mode 50 %:	N/A mPas
Maximum viscosity in slow mode 25 %:	N/A mPas
Accuracy of repeatability:	5 %
Materials:	
Dosing head:	PVDF (Polyvinylidene fluoride)
Valve ball:	Ceramic Al2O3
Gasket:	PTFE
Installation:	
Range of ambient temperature:	32 .. 113 °F
Maximum operating pressure:	145.04 psi
Type of inlet connection:	Hose
Type of outlet connection:	Hose
Installation set (Yes/No):	YES
Installation type:	0,17x1/4" up to 7,5 l/h,16bar
Max. Suction lift during operation:	6 m
Max. Suction lift during priming:	2 m
Liquid:	
Pumped liquid:	Water
Liquid temperature range:	32 .. 113 °F
Selected liquid temperature:	68 °F
Density:	62.29 lb/ft³
Electrical data:	
Power input P1:	19 W
Mains frequency:	50 / 60 Hz
Rated voltage:	1 x 100-240 V
Enclosure class (IEC 34-5):	IP65 / TYPE 4X
Length of cable:	1.5 m
Power plug:	US plug
Inrush current:	25A at 230V for 2ms
Controls:	
Control variant:	P
Level control:	YES
Pulse control:	YES
Ext. Stop input:	Yes
Output relays:	No
Others:	
Net weight:	4.65 lb
Gross weight:	5.97 lb
Country of origin:	US
Custom tariff no.:	8413.50.0050

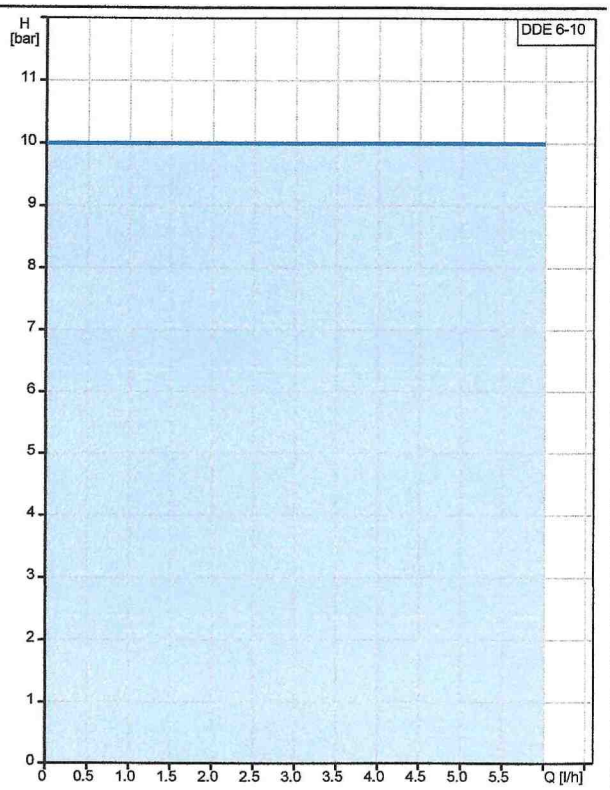

Pumped liquid = Water
Liquid temperature during operation = 68 °F
Density = 62.29 lb/ft³

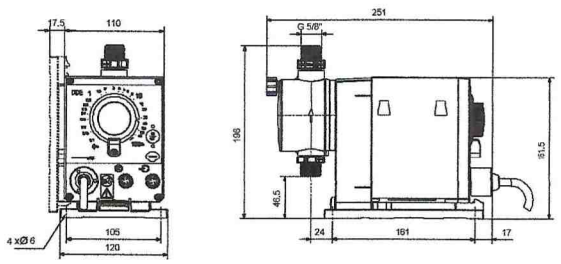

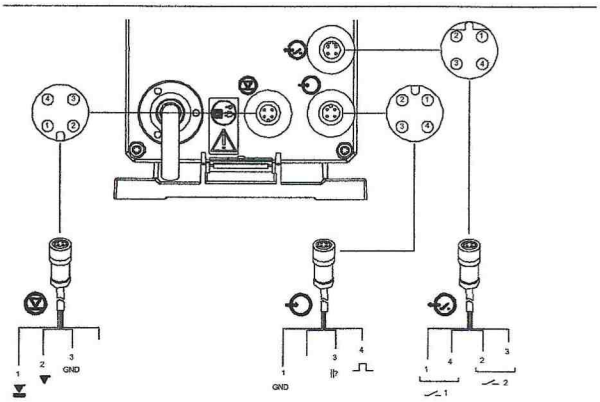

GRUNDFOS

Company name:
Created by:
Phone:

Date: 02/10/2025

97721114 DDE 6-10 P-PV/T/C-X-31I003BG

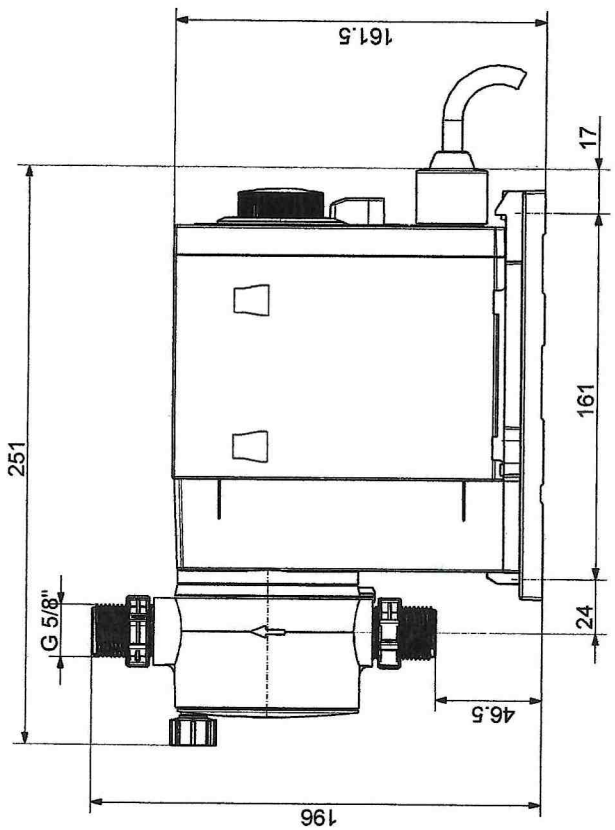

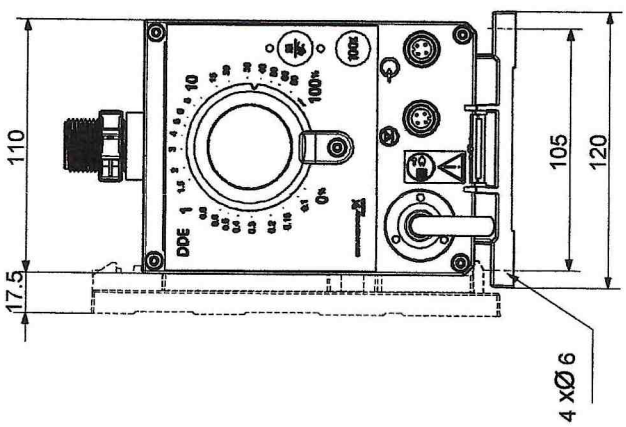

Note! All units are in [mm] unless others are stated.
Disclaimer: This simplified dimensional drawing does not show all details.

GRUNDFOS

Company name:
Created by:
Phone:

Date: 02/10/2025

97721114 DDE 6-10 P-PV/T/C-X-31I003BG

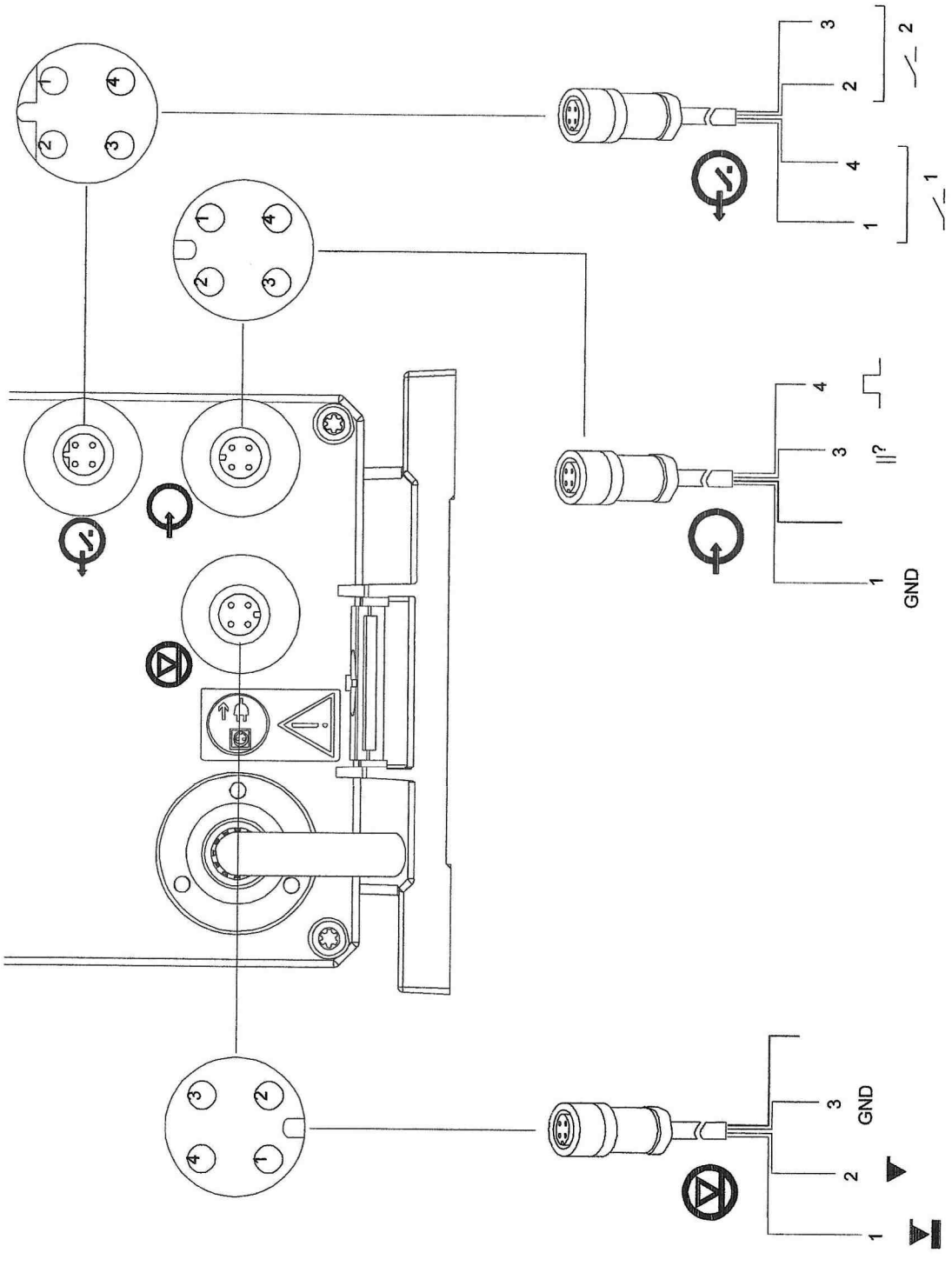

Note! All units are in [mm] unless others are stated.

SECTION 80001
WELL REHABILITATION

A. SCOPE

Under this heading shall include the rehabilitation of the Henderson and Waterstone Wells as shown on the plans and as specified herein. The Contractor shall comply with all local codes and regulations of local utilities.

Both wells shall receive the following procedures (in this order) to be considered a full rehabilitation.

Initial CCTV Inspection has been performed.

B. STEPS

1. Sediment Removal: Sediment Removal by mechanical cleaning (prior to air-bursting) is to be performed by use of a pump or suction hose to remove the loose mud and sediment form the bottom of the well.
2. Air Burst Cleaning: This Section covers the rehabilitation of municipal drinking water supply wells using compressed air impulse (airburst) cleaning methods in accordance with the following standards

    - Georgia EPD Rules for Safe Drinking Water (391-3-5)
    - Georgia Water Well Standards
    - AWWA A100 – Water Wells
    - NGWA Guidelines for Well Rehabilitation

    a. Submittals: The Contractor shall submit the following for Engineer approval prior to mobilization.
        i. Tool Manufacturer & Model
        ii. Proposed pressure ranges and monitoring procedure
        iii. Sequence of cleaning operations
        iv. Safety measures (OSHA, high-pressure controls)
        v. Discharge water management plan consistent with EPD stormwater/NPDES requirements
    b. Qualifications: Contractor shall have a minimum of five (5) years of documented experience rehabilitating Georgia public water supply wells.
    c. Post-Cleaning CCTV: Contractor shall perform and provide recorded video of full-depth downhole video inspection showing the cleaned screens and gravel pack response.
    d. Final Well Rehabilitation Report Containing: Pressure logs, Operating Intervals, Turbidity Data, Development Duration, Final Pumping Results, Disinfection logs per GA EPD standards.
    e. Quality Assurance: All work shall comply with the following requirements.
        i. GA EPD 391-3-5.04 Well Construction Standards

ii. GA EPD 391-3-5-.05 Maintenance & Disinfection Requirements
iii. GA EPD Drinking Wate Program Standards for Public Water Systems

f. Tools and methods shall not damage well casing, screen, or sanitary seal.
g. All chemicals introduced to the well must be NSF/ANSI 60 certified for potable water use.
h. AIR BURST CLEANING PROCEDURE
    i. Tool Positioning
        1. Lower tool to the lowest screen interval
        2. Verify depth using electronic indicator.
    ii. Controlled Impulse Application
    iii. Begin at bottom of screen; apply impulses for 3-5 minutes per interval.
    iv. Pulse frequency: 1-5 second intervals
    v. Pressure range: 1,000-3,000 PSI unless hydrogeologist specifies otherwise.
    vi. Raise tool 5-10 ft/cycle and repeat
    vii. Perform a minimum of two complete passes from bottom to top of screen.
    viii. Monitor: pressure levels, turbidity, well response (vibration, surge behavior)
    ix. Operational Restrictions
        1. Do not exceed pressures that risk screen or casing deformation
        2. Stop work immediately if:
            a. Sudden pressure loss is encountered
            b. Collapse indicators
            c. Abnormal well behavior
            d. Notify Engineer for evaluation before resuming.

3. 72-HOUR PUMP TEST: The Contractor shall furnish all labor, equipment, materials and appurtenances necessary to conduct a continuous 72-hour constant-rate aquifer pumping test on the designated production well. The purpose is to evaluate aquifer transmissivity, specific capacity, drawdown behavior, and hydraulic influence on surrounding wells or surface water features.
    a. Pumping Equipment
        i. Submersible or line-shaft pump capable of maintaining the specified test discharge rate (±5%) for the entire test duration.
        ii. Pump shall be sized to allow for both step-drawdown testing and the 72-hour test rate.
        iii. Pumps to be capable of pumping 150% of expected wells production flows. Expected production flows:
            1. Henderson well: 250 gpm
            2. Waterstone well: 100 gpm
    b. Discharge Measurements
        i. Calibrated flow meter (magnetic or inline turbine) with accuracy ±2%.
        ii. Manual backup measurement device (eg., volumetric tank, pilot tube, or orifice plate).
    c. Water Level Measurements
        i. Electronic water level sounder (manual)

ii. Pressure transducer/data logger capable of:
    1. 1-5 second interval for start/recovery
    2. <1 cm accuracy
    3. Temperature compensation

d. Discharge Piping
    i. Discharge shall be routed to a location preventing recirculation or erosion; minimum 200' from wellhead unless otherwise approved.
    ii. Contractor shall provide flow dissipation control (via rip-rap check dam or other suitable device) at point of discharge to ensure protection of downstream area and prevent erosion.

e. Generator/Electrical
    i. Power supply is the responsibility of the contractor and must allow for uninterrupted 72-hour operation.

f. PRE-TEST REQUIREMENT
    i. Pre-Test Coordination
        1. Contractor shall notify Engineer 48 hours before mobilization.
        2. Confirm pumping rate, measurement intervals, discharge location, and safety protocols
    ii. Well Preparation
        1. Measure baseline static water level after at least 12 hours of non-pumping conditions.
        2. Verify well development is complete before beginning tests.
    iii. Calibration
        1. Flow meter, level probes, and synchronized clocks will be calibrated and documented.

C. OPERATIONAL PROCEDURE

1. Performed prior to the 72-hour test.
    a. Minimum 3–4 pumping steps each lasting 60 minutes.
    b. Increase rate incrementally (e.g., 50%, 75%, 100%, 125% of target rate).
    c. Record the following every 1 minute for the first 10 minutes, then every 5 minutes for remainder:
        i. Pumping rate
        ii. Water level
        iii. Discharge pressure
        iv. Voltage/amp load on motor

    Results determine the constant-rate test pumping rate.

2. DISINFECTION - Performed prior to the 72-hour test.
    a. Chlorinate the well and use a 50–100 mg/L free chlorine solution, calculate based on well volume.
    b. Circulate / agitate - Recirculate water downhole and out discharge to mix thoroughly with chlorine solution.
    c. Contact time - Maintain chlorine in well for 12–24 hours (minimum 8 hours).

d. Dechlorinate before discharge - Neutralize to <0.1 mg/L per state water-quality discharge rules.
e. Flush until chlorine is no longer present and continue flushing until:
f. Chlorine <0.1 mg/L
g. Water is visually clear
h. Turbidity stabilized
i. Collect post-disinfection bacteriological sample
j. After flushing and stabilization, collect:
k. Total coliform / E. coli (bacteriological)
l. Additional parameters if required by EPD

3. 72-Hour Constant-Rate Pump Test
    i. Startup (0 to 10 minutes)
        1. Start pump and adjust discharge until target rate is achieved ±5%.
        2. Measure and record water level every 30 seconds for the first 5 minutes, then every 1 minute through 10 minutes.
    ii. First Hour
        1. Record water levels at:
        2. 1-minute intervals for first 10 minutes
        3. 5-minute intervals from 10–60 minutes
    iii. 1 to 8 Hours
        1. Record water level every 10 minutes.
    iv. 8 Hours to 72 Hours
        1. Record water level every 30 minutes.
    v. Discharge Rate
        1. Record flow rate every 30 minutes throughout test.
        2. Rate shall not vary more **than ±5%;** if variation exceeds limits:
            a. Note deviation
            b. Correct immediately
            c. Do not stop pump unless required for safety
    vi. Operational Logging
        1. Contractor shall maintain a log noting:
        2. Pump amperage and voltage
        3. Weather conditions
        4. Discharge location changes
        5. Any maintenance or anomalies
        6. Turbidity or water quality observations

4. 24-HOUR / 48-HOUR INTERIM CHECKS
    a. The Engineer will inspect on site at minimum:
        i. Hour 24
        ii. Hour 48 Adjustments to discharge rate shall be made only under Engineer's direction.

5. TERMINATION OF PUMPING
    a. At completion of 72 hours:
    b. Shut pump down without throttling.
    c. Immediately begin recovery monitoring.

6. RECOVERY TEST PROCEDURES
    a. Measurement Intervals
        i. First 5 minutes: every 15 seconds
        ii. 5–10 minutes: every 30 seconds
        iii. 10–30 minutes: every 1 minute
        iv. 30–60 minutes: every 5 minutes
        v. 1–6 hours: every 10 minutes
        vi. Continue until water level returns to 95% of static or for a minimum of 12 hours.

7. DATA REPORTING
    a. Required Outputs
        i. The Contractor shall submit a report including:
        ii. Time–drawdown and time–recovery tables
        iii. Pumping rate logs
        iv. Water-level plots
        v. Transducer raw data (CSV format)
        vi. Step-drawdown analysis (Jacob or Hantush/Bierschenk)
        vii. Constant-rate analysis:
            1. Cooper-Jacob straight-line method
            2. Theis type curve match
            3. Specific capacity (gpm/ft)
            4. Estimated transmissivity (T) and storativity (S)
    b. Equipment and Test Log
        i. Include:
            1. Pump horsepower and setting depth
            2. Meter calibration sheets
            3. Any interruptions or anomalies
            4. Weather conditions during testing

8. ACCEPTANCE CRITERIA
    a. Test is considered valid if:
        i. Pumping rate remained within ±5%
        ii. No unscheduled shutdowns occurred
        iii. Drawdown measurements follow required intervals
        iv. Recovery of at least 95% of static level achieved
        v. Data is complete and submitted in required formats

9. WATER QUALITY SAMPLING/ANALYSIS
    a. At the end of the 72-hour test and when no chlorine disinfectant is present.
        i. For samples required for collection and timing of when samples are to be taken for EPD lab approval refer to GA. Comp. Rules & Regulations r. 391-3-5-.14 Operation; Item # 11 Certified Laboratories .18 - .27.

10. FINAL REPORTING
    a. A hydrogeologist will provide a final report of each well containing a summary of the water quality analysis summary and pump rates.
    b. The above-mentioned work will be overseen by a third-party hydrogeologist, Dan Harman at Ground-Water Services, Inc. It is the Contractor's responsibility to coordinate with the hydrogeologist for the performance of the work.

END OF SECTION

SECTION 90001
COVERED AREA (FOR THE SPILL CONTAINMENT AREA)

A. SCOPE

Under this heading shall be included installation of the COVERED AREA (FOR THE SPILL CONTAINMENT AREA) as shown on the plans and as specified herein. The Contractor shall comply with all local codes and regulations of local utilities. Contractor shall coordinate work necessary for the completion of utilities with local utility companies and cooperate with the companies as required.

Construct a lean-to procured through Renegade Steel meeting the detailed specifications in the construction details. This structure will be made of red-iron I-beams and metal corrugated roof. The entire covered area system shall be mounted to the concrete footers by base plates, bolts, and fasteners in 4 corner locations with 8 beams. It shall be 9' in height from finished floor elevation to the top of the roof along the building and 8'-4 ½" along the low side of the roof. A roof ridge shall be placed between the prefabricated structure and the extended 2' roof extension to minimize water intrusion.

For pricing the COVERED AREA please contact Mason Pavlik at Renegade Steel Buildings, Inc. via email; mpavlik@renegadebuildings.com.

A covered area can be field erected onsite, but it must meet all criteria for the COVERED AREA Renegade Steel Building solution. The criteria to meet this specification shall be the burden of the contractor to provide an engineered design solution to meet this specification.

B. SUMMARY

a. This section includes materials, fabrication, delivery, and installation of a pre-engineered, red-iron, welded-plate I-beam lean to structure manufactured by Renegade Steel, Inc. (or approved equal).
b. Work includes, but is not limited to:
    i. Structural steel primary framing (I-beams, rafters, columns/posts)
    ii. Secondary framing (purlins, girts, eave struts)
    iii. Roof panels and fasteners
    iv. Trim, flashing, closures, and accessories
    v. Factory-applied finishes
    vi. Anchor bolts, base plates, and connection hardware

C. REFERENCES

a. AISC – American Institute of Steel Construction
b. AISI – American Iron Steel Institute
c. ASTM – Applicable standards for structural steel, bolts, coatings, etc.
d. MBMA – Metal Building Manufacturers Association Metal Building Systems Manual

D. SUBMITTALS/SHOP DRAWINGS

1. Shop drawings shall be submitted on each manufactured item supplied under this Section along with other information as specified herein
2. Product Data – Manufacturer specifications for all materials and components.
3. Engineering Calculations – Signed and sealed professional engineer registered in project state
4. Certificates – Mill certificates confirming ASTM compliance
5. Warranty – 1 Year general workmanship warranty

E. QUALITY ASSURANCE

a. Manufacturer shall have a minimum of 10 years' experience producing red-iron steel structures.
b. Fabrication shall comply with AISC standards
c. Welders certified in accordance with AWS D1.1.

F. DELIVERY, STORAGE, HANDLING

a. Deliver materials in manufacturer's original packaging
b. Store, above grade, protected from moisture and deformation
c. Handle components to prevent bending, marring, or coating damage

G. PRODUCTS

a. Renegade Steel, Inc., or approved equal meeting all requirements of this specification.

b. MATERIALS
    i. Primary Framing: ASTM A36, A992, or A572 Grade 50 welded-plate red iron I-beam members.
    ii. Secondary Framing: Cold-formed Z-purlins and girts – ASTM A653, Grade 55 minimum, G90 galvanized coating. Eave struts, bracing, flange bracing as required.

c. ROOF CLADDING
    i. 26-Gauge minimum PBR-profile metal panels
    ii. Factory-applied SMP or Kynar 500 finish, color as selected by Owner.

d. FASTENERS
    i. Self-drilling, corrosion-resistant panel fasteners with factory-applied seals
    ii. Structural bolts ASTM A325 or A490 as required

e. TRIM AND ACCESSORIES
    i. Eave trim, rake trim, closures, sealants, ridge caps, and flashings.

f. COATINGS
    i. Primary framing: Red-oxide primer applied at factory
    ii. Field-touch-up paint supplied by manufacturer

H. DESIGN CRITERIA
a. Structure shall be engineered to meet the governing building code, including:
    i. Ground Snow Load, Wind Load, Seismic, Live Roof Load
b. Lean-to shall be designed as a fully integrated structural extension of the main building or freestanding support (as shown in plans).
c. Minimum roof slope – 1:12 unless otherwise noted.

I. FABRICATION
a. All fabrication shall be performed under controlled conditions by manufacturer.
b. Connections welded per AWS D1.1 and inspected prior to shipment.
c. Holes, clips, and support tabs shall be factory-punched or welded as shown on engineered drawings.

J. EXAMINATION
a. Verify building interfaces, slab elevations, and anchor bolt locations prior to erection.
b. Notify Engineer of discrepancies before proceeding.

K. INSTALLATION
a. Erect the lean-to structure in strict accordance with manufacturer instructions and approved shop drawings.
b. Set anchor bolts accurately and grout base plates after alignment
c. Install primary and secondary framing plumb, square, and properly braced
d. Install roof panels with required lap patters, fastener spacing, and closure strips
e. Seal all penetrations, labs, and transitions to provide a watertight structure

L. FIELD QUALITY CONTROL
a. Contractor shall visually verify welds, bolted connections, and frame alignments
b. Any damaged components shall be replaced at no extra cost to owner

M. CLEANING AND PROTECTIONS
a. Remove metal shavings, debris, and excess sealant from roof surfaces
b. Protect all finishes against damage until final acceptance

N. WARRANTY
a. Provide Manufacturer standard structural warranty and 1-year labor warranty.

END OF SECTION

SECTION 432311
SUBMERSIBLE WELL PUMPS

A. SCOPE

Under this heading shall be included the installation of the submersible well pumps as shown and described on the plans and as specified herein. The Contractor shall comply with all local codes and regulations of local utilities. He shall coordinate work necessary for the completion of utilities with local utility companies and cooperate with the companies as required.

B. REFERENCES

Hydraulic Institute: Current Standards.

1. HI 14.6: Hydrodynamic Pumps for Hydraulic Performance Acceptance Tests.
2. HI 11.6: Submersible Pump Tests

C. SHOP DRAWINGS/SUBMITTALS

Submittal data shall be provided to show compliance with these specifications, plans or other specifications that will influence the proper operation of the pump(s).

Standard submittal data for approval must consist of:

1. Pump Performance Curves.
2. Pump Outline Drawing.
3. Station Drawing for Accessories.
4. Electrical Motor Data.
5. Typical Installation Guides.
6. Technical Manuals and Parts List.
7. Printed Warranty.
8. Management system certificate ISO 9001.
9. Manufacturer's Equipment Storage Recommendations.
10. Manufacturer's Standard Recommended Start-Up Report Form.

Lack of the above requested submittal data is cause for rejection.

D. QUALIFICATION REQUIREMENTS

The manufacturer shall provide data on alternate equipment manufacturer's experience. Only Manufacturers with 10 or more years of experience who have furnished at least 5 similar lift stations shall be considered.

E. MATERIALS/PRODUCTS

The following submersible well pumps are to be provided and installed:

Henderson:

Pump: Grundfos **300S200-6B** 14B735C6 3” NPT 6” Motor 3x440/460/480 V 60 Hz
Duty Point: 250 gpm at 235’ TDH

Waterstone:
Pump: Grundfos **90S75-7** 93050597 3” NPT 4” Motor 3x440-460 V 60 Hz
Duty Point: 100 gpm at 223’ TDH

See attached technical data sheets and pump curves at the end of this specification.

Pressure Transducer:

For each pump/well, provide a submersible hydrostatic pressure transducer for continuous water level measurement in the well. The sensor shall be a 4–20 mA, loop-powered unit with 316 stainless steel housing, vented polyurethane submersible cable, and an accuracy of ±0.1% full scale or better. Pressure range shall be selected based on well depth (minimum 0–300 ft H_2O). The transducer shall be installed 2 feet above the pump discharge head and secured to the 3-inch stainless steel drop pipe using stainless steel bands or UV-rated ties at 10–20 foot intervals. The cable shall be routed inside a dedicated ¾" PVC conduit drop tube to prevent abrasion or entanglement during pump extraction.

The transducer cable shall terminate at the well cap using a liquid-tight cord grip, with the vent tube extended to a clean, dry location above grade and equipped with a desiccant vent cap. Connect the signal leads to the control panel or SCADA system for real-time level monitoring. Equipment shall be NEMA 6P / IP68 rated and suitable for continuous submersion in potable groundwater. Acceptable manufacturers include In-Situ, Keller, STS, Druck/GE, or approved equal.

F. EXECUTION/INSTALLATION

1. GENERAL
   Perform installation in accordance with Contract Documents and manufacturers specifications.

2. DELIVERY, STORAGE AND HANDLING
   Deliver, store and handle products to site under provisions of the Contract & Specifications

3. INSTALLATION EQUIPMENT
   Contractor shall furnish all tools, material, labor, and equipment necessary to install the submersible well pumps.

4. START-UP
   After installation, a pump station start-up shall be performed by the installing contractor under the supervision of the manufacture’s authorized representative. 2

days of field service shall be provided by an authorized, factory-trained representative of the pump manufacturer. Services shall include, but not be limited to, inspection of the completed pump station installation to ensure that it has been performed in accordance with the manufacturer's instructions and recommendations, supervision of all field-testing and activation of the Pump Manufacturer's Warranty. The test shall demonstrate to the satisfaction of the Owner that the equipment meets all specified performance criteria, is properly installed and anchored, and operates smoothly without exceeding the full load amperage rating of the motor. The Contractor shall be responsible for coordinating the required field services with the Pump Manufacturer.

5. FACTORY TRAIED SUPERVISION
   The contractor shall procure a factory trained technician to inspect equipment prior to putting the equipment into operation.

   Contractor to provide point to point test of all wiring.

   Functional test of all equipment alarms and controls.

6. WARRANTY
   When installed in accordance with all the provisions of this section, related sections and the supplier's installation manual, the warranty on the Monitoring and Control equipment shall be 12 months. The warranty period shall start from the date of equipment delivery to the job site.

Henderson

Submittal Data

PROJECT:	UNIT TAG:	QUANTITY:
	TYPE OF SERVICE:	
REPRESENTATIVE:	SUBMITTED BY:	DATE:
ENGINEER:	APPROVED BY:	DATE:
CONTRACTOR:	ORDER NO.:	DATE:



Note! Product picture may differ from actual product

300S200-6B

Submersible pumps in stainless steel. EN 1.4301 (AISI 304). EN 1.4401 (AISI 316). EN 1.4539 (AISI 904L). Typical application: Ground water, Irrigation, Mining, Fountain, Off-shore etc.

Conditions of Service	
Flow:	277 US GPM
Head:	235 ft
Efficiency:	61.1 %
Liquid:	Water
NPSH required:	20.93 ft

Pump Data	
Liquid temperature range:	5 .. 104 °F
Product number:	14B735C6

Motor Data	
Rated power - P2:	20 HP
Rated voltage:	440-460-480 V
Mains frequency:	60 Hz
Enclosure class:	IP68
Insulation class:	F
Motor protection:	NONE
Thermal protection:	external
Motor type:	MS6000

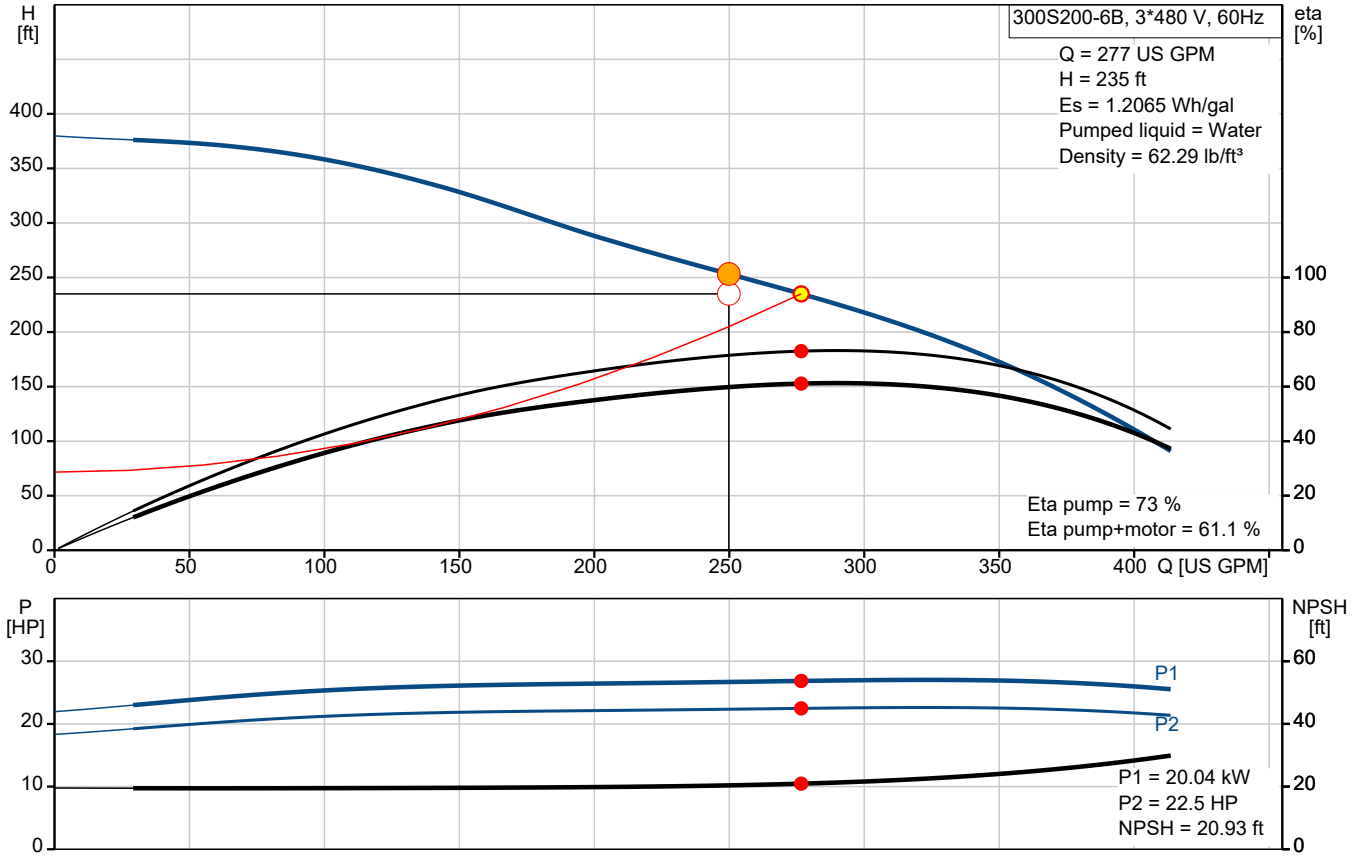

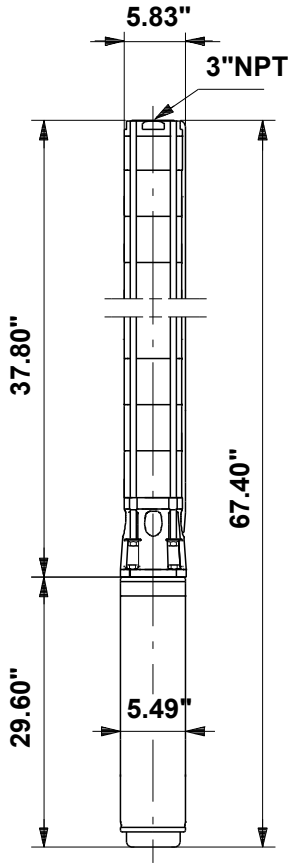

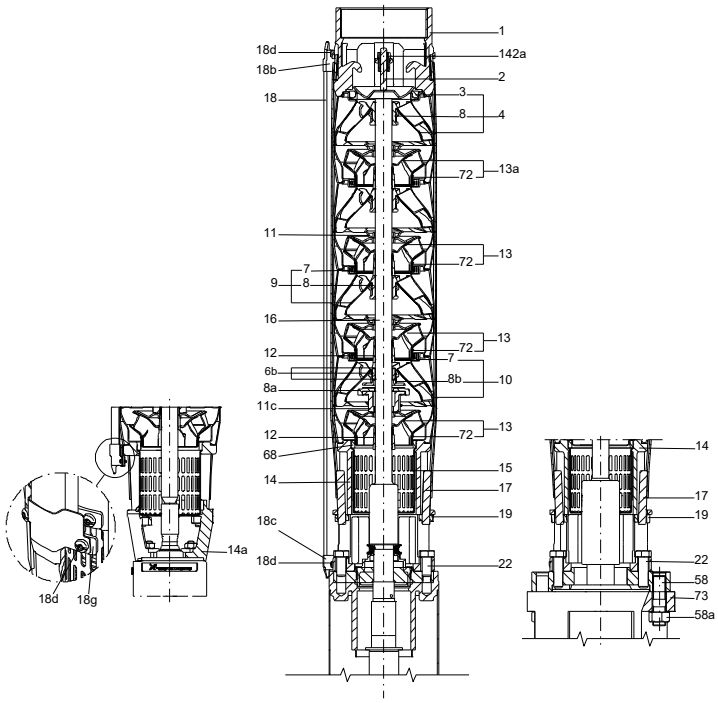

Materials:

Impeller:	Stainless steel AISI 304 EN 1.4301
Motor:	Stainless steel DIN W.-Nr. 1.4301 AISI 304

Company name:
Created by:
Phone:

Date: 03/10/2025

14B735C6 300S200-6B 60 Hz

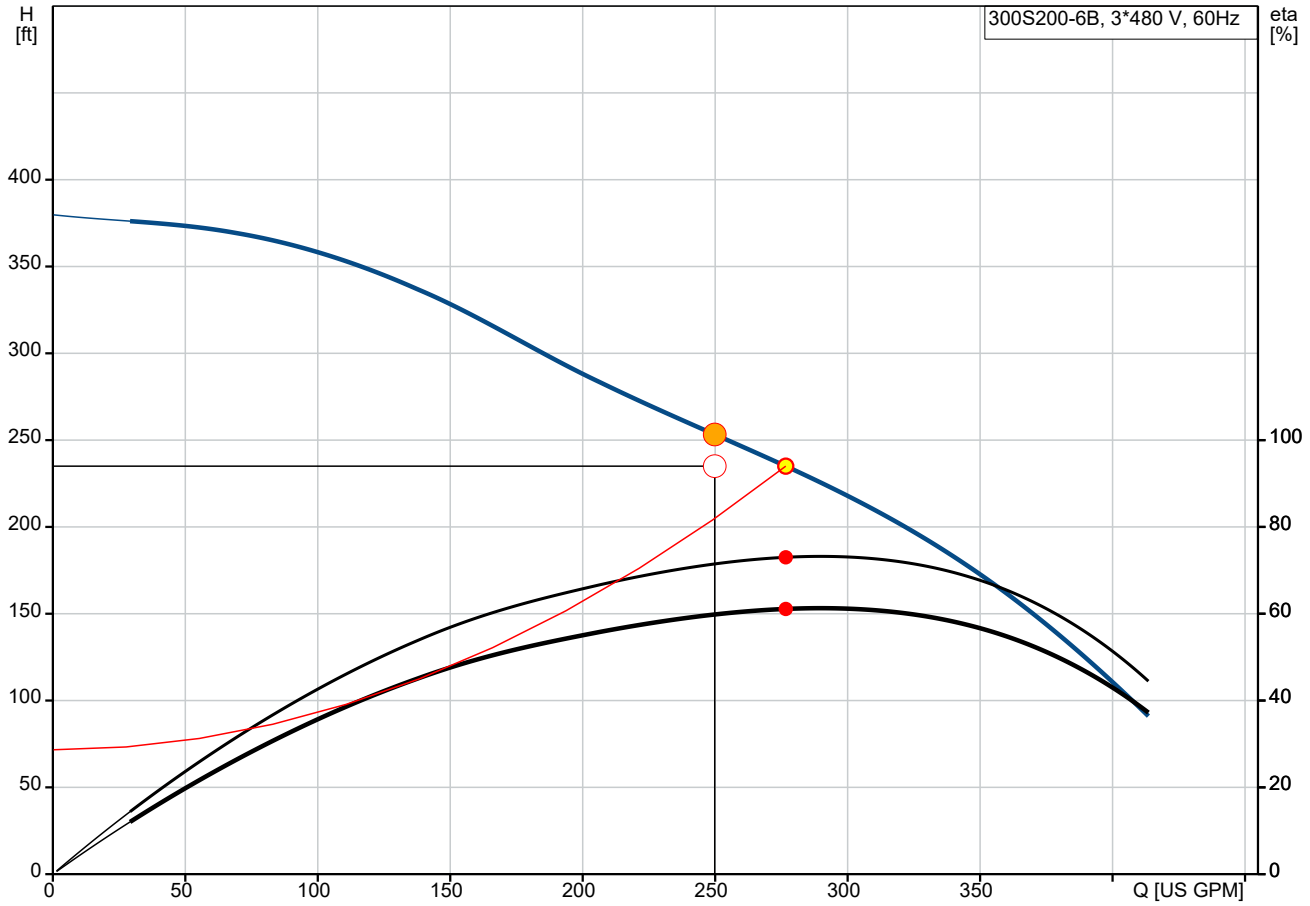

Q = 277 US GPM
Es = 1.2065 Wh/gal
Density = 62.29 lb/ft³
Eta pump+motor = 61.1 %

H = 235 ft
Pumped liquid = Water
Eta pump = 73 %

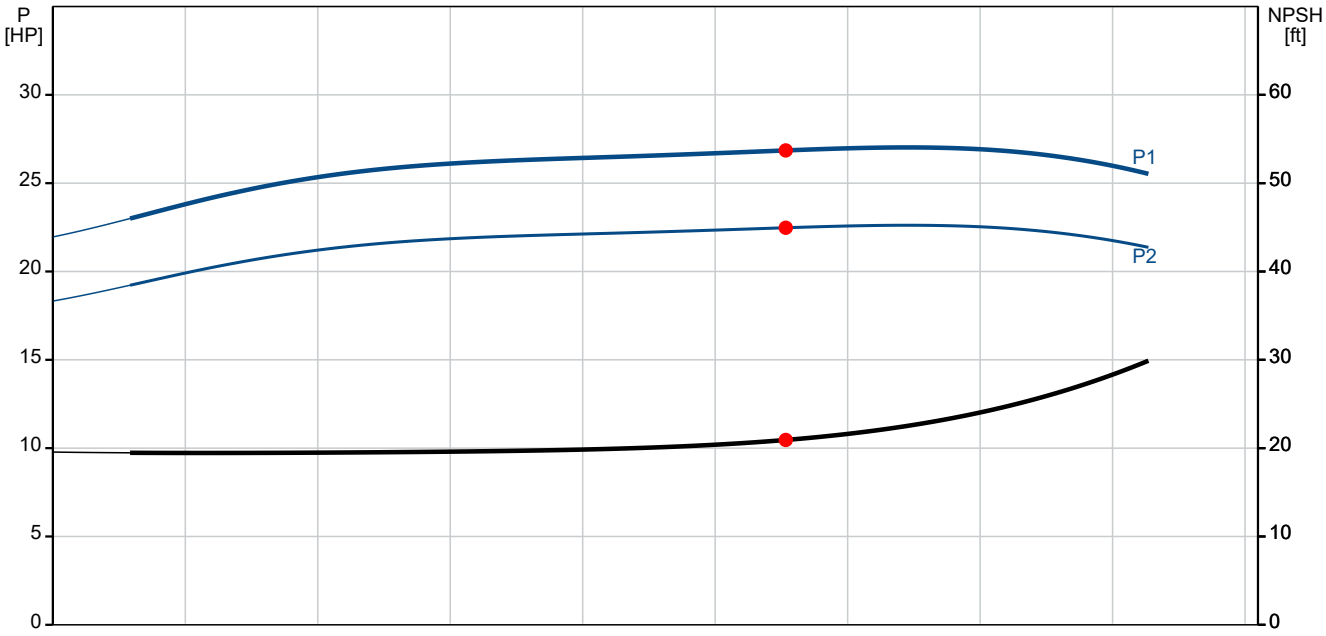

P1 = 20.04 kW
P2 = 22.5 HP
NPSH = 20.93 ft

Company name:
Created by:
Phone:

Date: 03/10/2025

Description	Value
General information:	
Product name:	300S200-6B
Product No:	14B735C6
EAN number:	5700393985872
Technical:	
Pump speed on which pump data are based:	3450 rpm
Actual calculated flow:	277 US GPM
Rated flow:	317 US GPM
Resulting head of the pump:	235 ft
Rated head:	196.9 ft
Stages:	6
Number of reduced-diameter impellers:	B
Shaft seal for motor:	SIC/SICNBR
Approvals:	CULDWUS,CCSAUS
Approvals for drinking water:	PROP65
Curve tolerance:	ISO9906:2012 3B
Model:	B
Motor version:	T40
Return valve:	YES
Materials:	
Pump:	Stainless steel
	EN 1.4301
	AISI 304
Impeller:	Stainless steel
	EN 1.4301
	AISI 304
Motor:	Stainless steel
	DIN W.-Nr. 1.4301
	AISI 304
Installation:	
Maximum ambient pressure:	870.23 psi
Maximum operating pressure:	870.23 psi
Maximum outlet pressure:	169.69 psi
Type of connection:	NPT(F)
Size of connection:	3 inch
Motor diameter:	6 inch
Minimum borehole diameter:	6.1 in
Liquid:	
Pumped liquid:	Water
Liquid temperature range:	5 .. 104 °F
Max liquid t at 0.15 m/sec:	104 °F
Electrical data:	
Motor type:	MS6000
Motor flange design:	Grundfos
Rated power - P2:	20 HP
Power (P2) required by pump:	20 HP
KVA code:	J
Mains frequency:	60 Hz
Rated voltage:	3 x 440-460-480 V
Service factor:	1.15
Rated current:	33.5-32.5-32.0 A
Requested voltage:	480 V
Rated current at this voltage:	32.5 A
Starting current:	520-570-610 %
Cos phi - power factor:	0.85-0.84-0.81
Rated speed:	3450-3470-3480 rpm

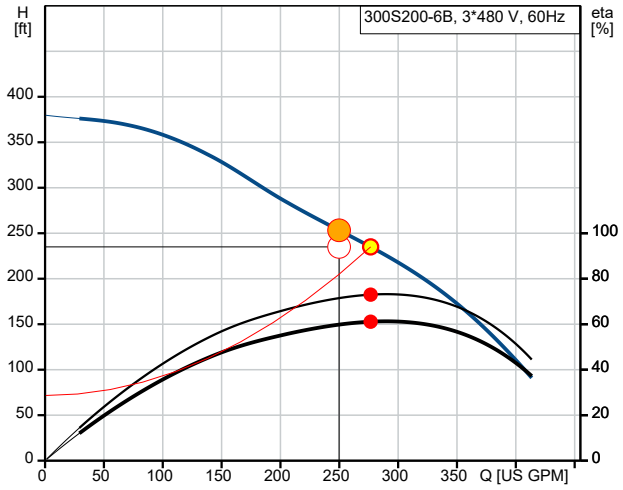

Q = 277 US GPM
Es = 1.2065 Wh/gal
Density = 62.29 lb/ft³
Eta pump+motor = 61.1 %

H = 235 ft
Pumped liquid = Water
Eta pump = 73 %

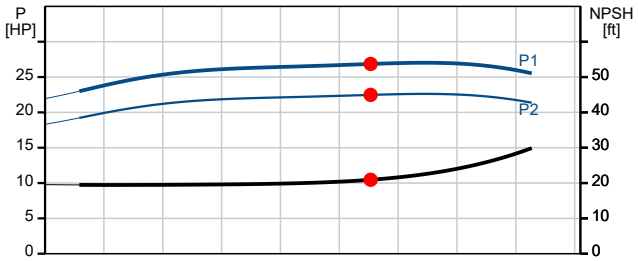

P1 = 20.04 kW
P2 = 22.5 HP
NPSH = 20.93 ft

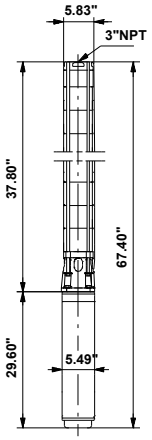

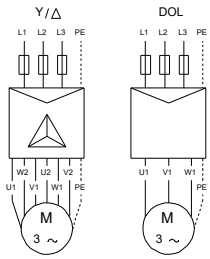

U1, W2	Brown
V1, U2	Black
W1, V2	Grey

GRUNDFOS

Company name:
Created by:
Phone:

Date: 03/10/2025

Description	Value
Start. method:	direct-on-line
Enclosure class (IEC 34-5):	IP68
Insulation class (IEC 85):	F
Built-in motor protection:	NONE
Thermal protec:	external
Built-in temp. transmitter:	yes
Motor No:	96166166
Cable number:	N/A
Windings:	Enamelled
Others:	
Minimum efficiency index, MEI ≥:	-.--
DOE Pump Energy Index CL:	0.92
Net weight:	169 lb
Gross weight:	235 lb
Shipping volume:	8.19 ft³
Country of origin:	US
Custom tariff no.:	8413.70.2004

GRUNDFOS

Company name:
Created by:
Phone:

Date: 03/10/2025

14B735C6 300S200-6B 60 Hz

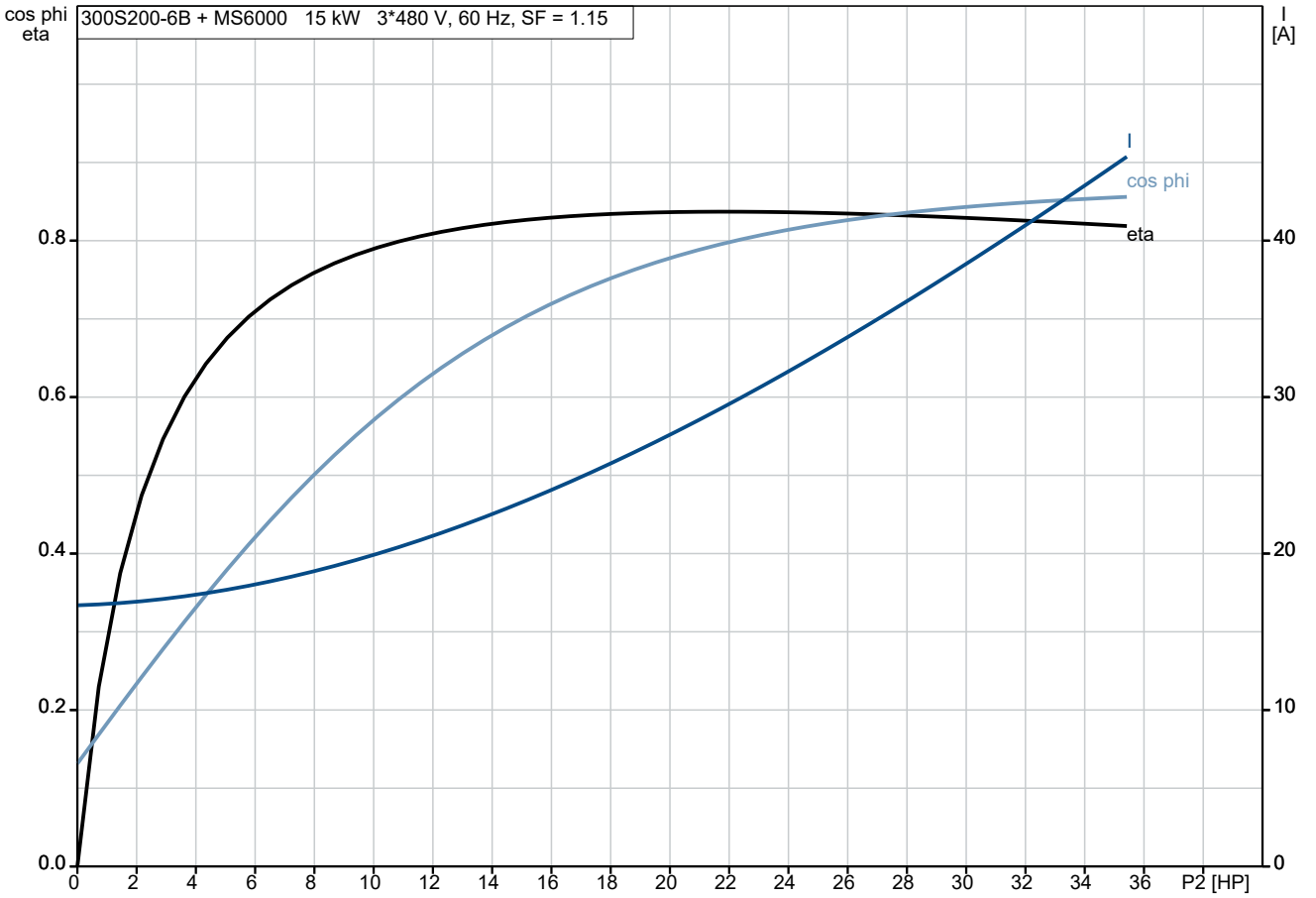

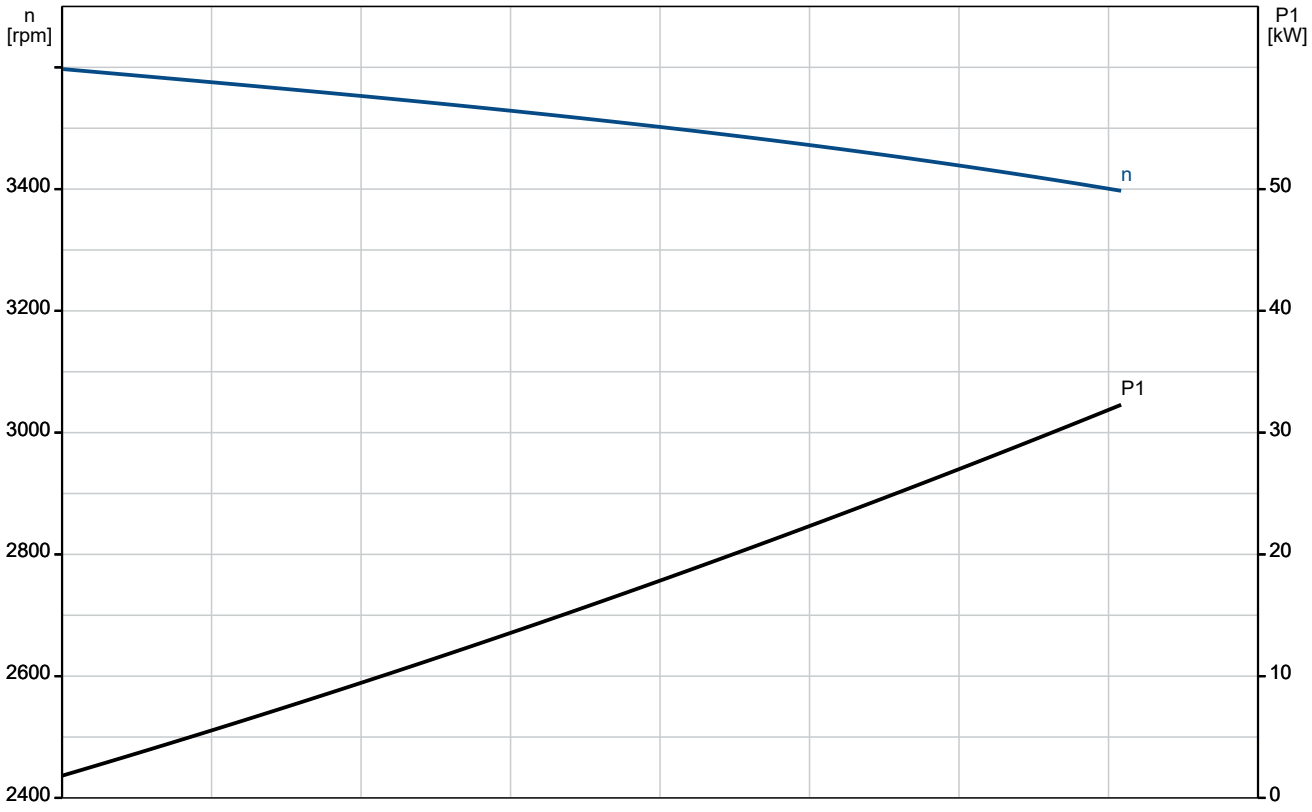

GRUNDFOS

Company name:
Created by:
Phone:

Date: 03/10/2025

14B735C6 300S200-6B 60 Hz

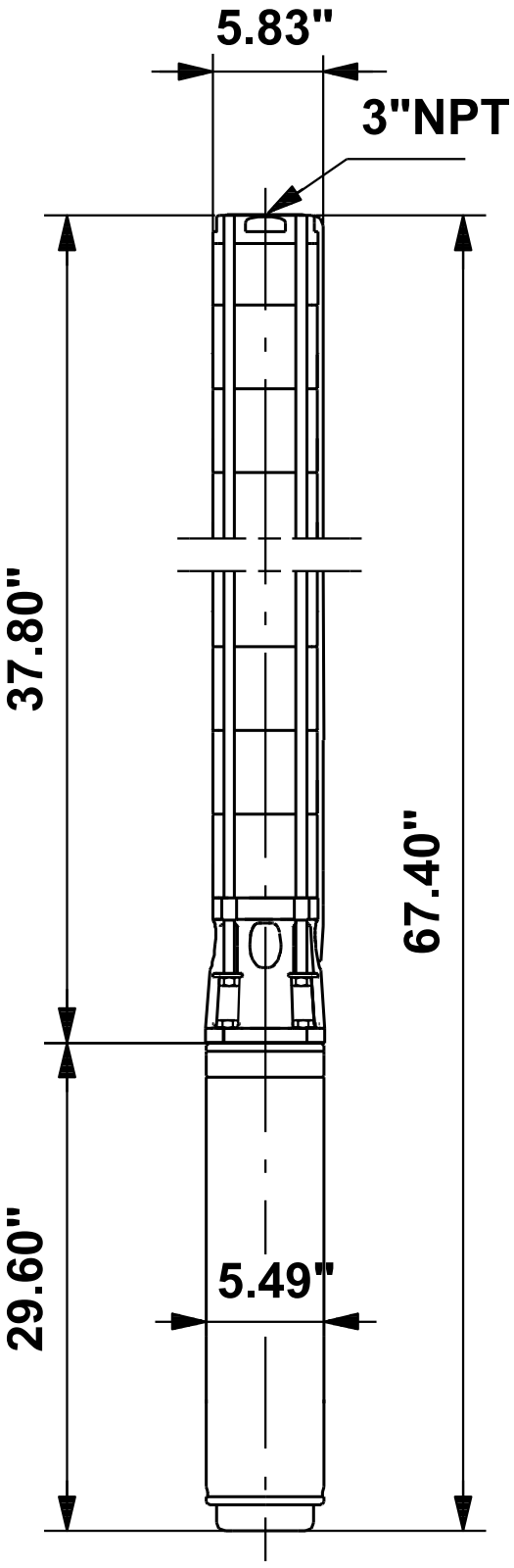

Note! All units are in [in] unless others are stated.
Disclaimer: This simplified dimensional drawing does not show all details.

14B735C6 300S200-6B 60 Hz

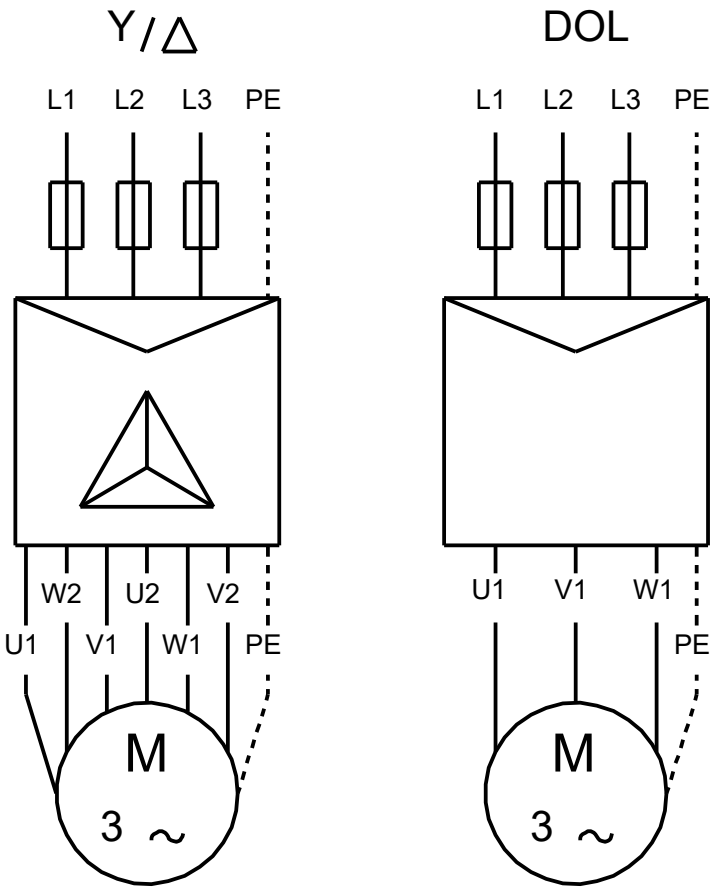

U1, W2	Brown
V1, U2	Black
W1, V2	Grey

Note! All units are in [in] unless others are stated.

Company name:
Created by:
Phone:

Date: 03/10/2025

Installation and Input

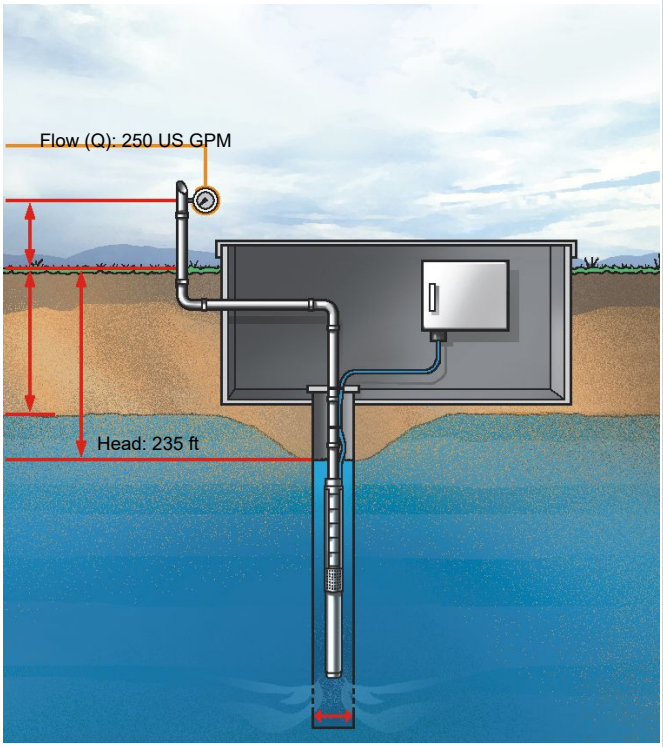

Sizing Results

Product number:	14B735C6
Type:	300S200-6B
Flow:	277 US GPM (54755710)
H total:	235 ft
Power P1:	20.04 kW
Power P2 required in the duty point:	22.5 HP
Eta pump:	73.0 %
Eta motor:	83.7 %
Eta total:	61.1 %
Energy consumption:	72707 kWh/year
Spec. energy consumption:	1.328 kWh/1000 gal (4.25 kWh/gal/ft)
Motor type:	MS6000
Phase:	3
Voltage:	440-460-480
Frequency:	60 Hz
Current (rated):	32 A
Current (actual):	30 A
Cos phi (actual):	0.80
Liquid max. temperature:	104 °F

Cable losses are not included !

Load profile

	1
Flow (%)	100
Flow (US gpm)	250
Head (%)	108
Head (ft)	253.2
P1 (kW)	19.92
Eta total (%)	59.8
Time (h/a)	3650
Energy consumption (kWh/Year)	72707
Quantity	1

Pump Curve

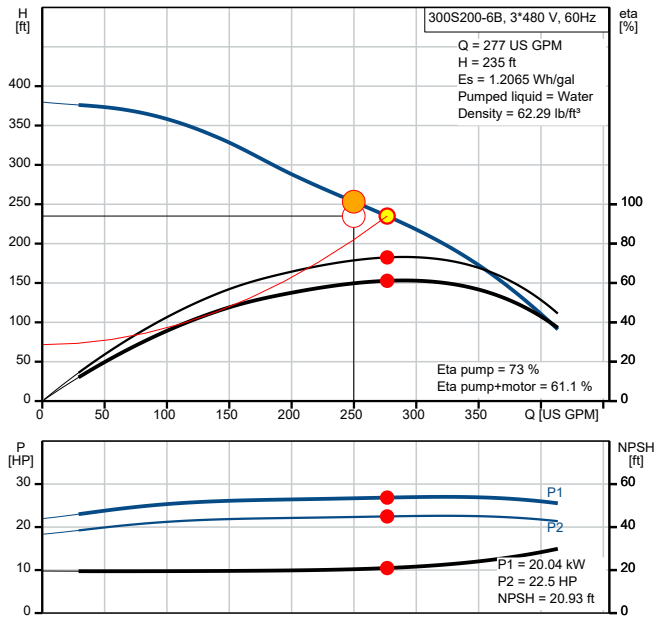

Dimensional Drawing

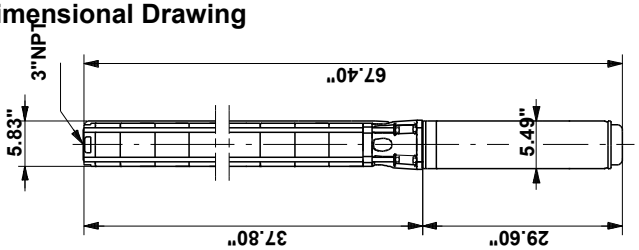

Waterstone

Submittal Data

PROJECT:	UNIT TAG:	QUANTITY:
	TYPE OF SERVICE:	
REPRESENTATIVE:	SUBMITTED BY:	DATE:
ENGINEER:	APPROVED BY:	DATE:
CONTRACTOR:	ORDER NO.:	DATE:



Note! Product picture may differ from actual product

90S75-7

Submersible pumps in stainless steel. EN 1.4301 (AISI 304). EN 1.4401 (AISI 316). EN 1.4539 (AISI 904L). Typical application: Ground water, Irrigation, Mining, Fountain, Off-shore etc.

Conditions of Service	
Flow:	105 US GPM
Head:	223 ft
Efficiency:	59.6 %
Liquid:	Water
NPSH required:	23.56 ft

Pump Data	
Liquid temperature range:	5 .. 104 °F
Product number:	93050597

Motor Data	
Mains frequency:	60 Hz
Enclosure class:	IP68

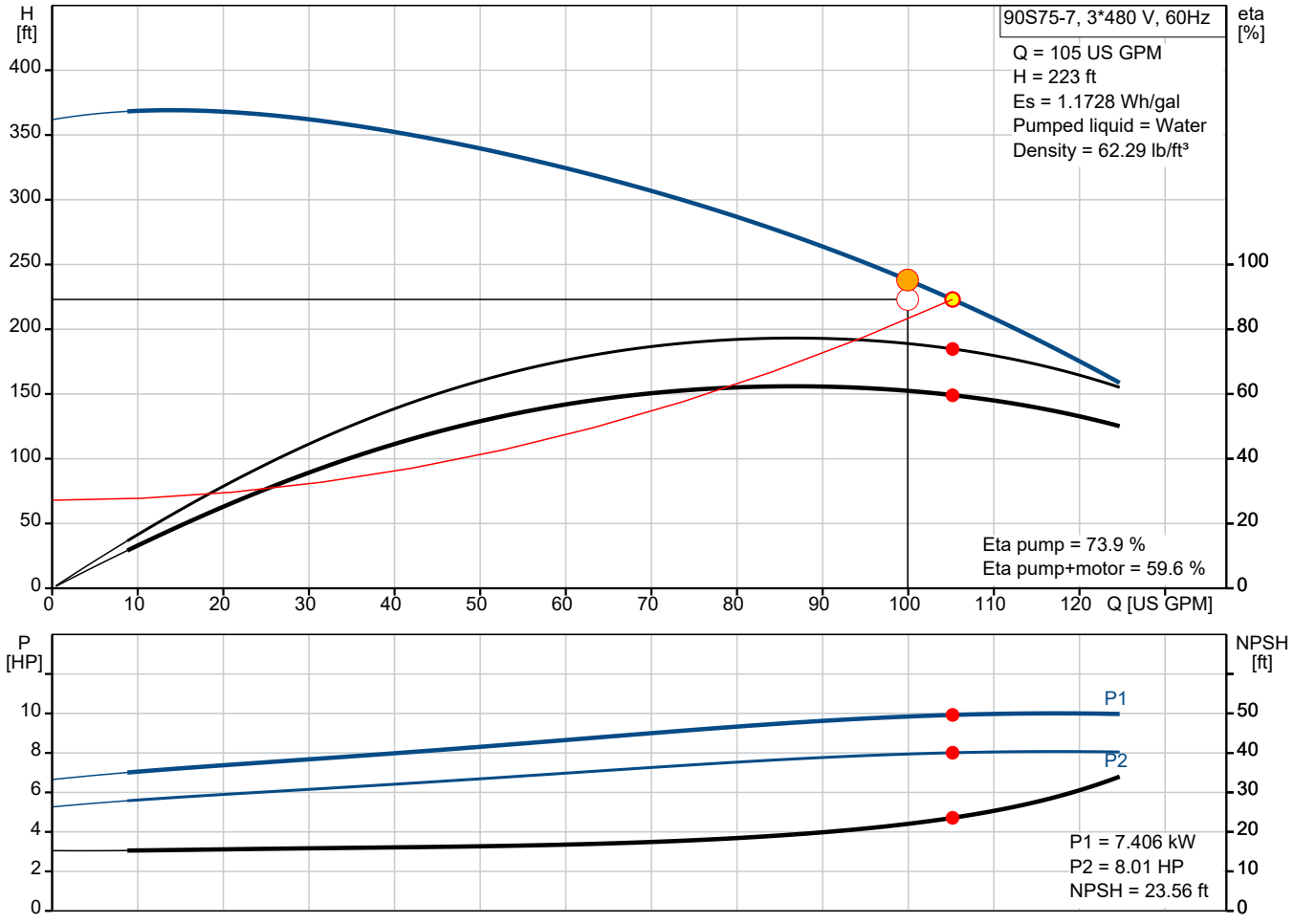

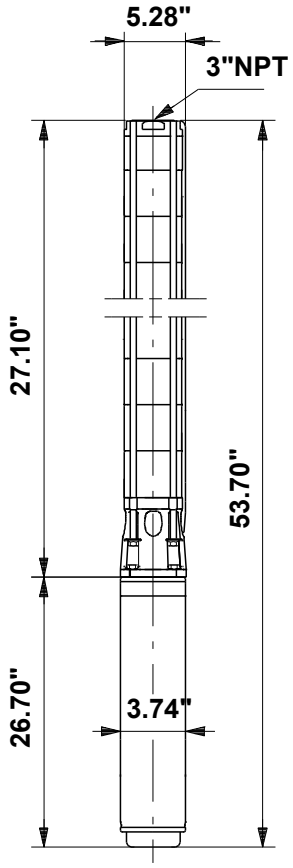

Materials:

Impeller: Stainless steel
AISI 304
EN 1.4301

Company name:
Created by:
Phone:

Date: 03/10/2025

93050597 90S75-7 60 Hz

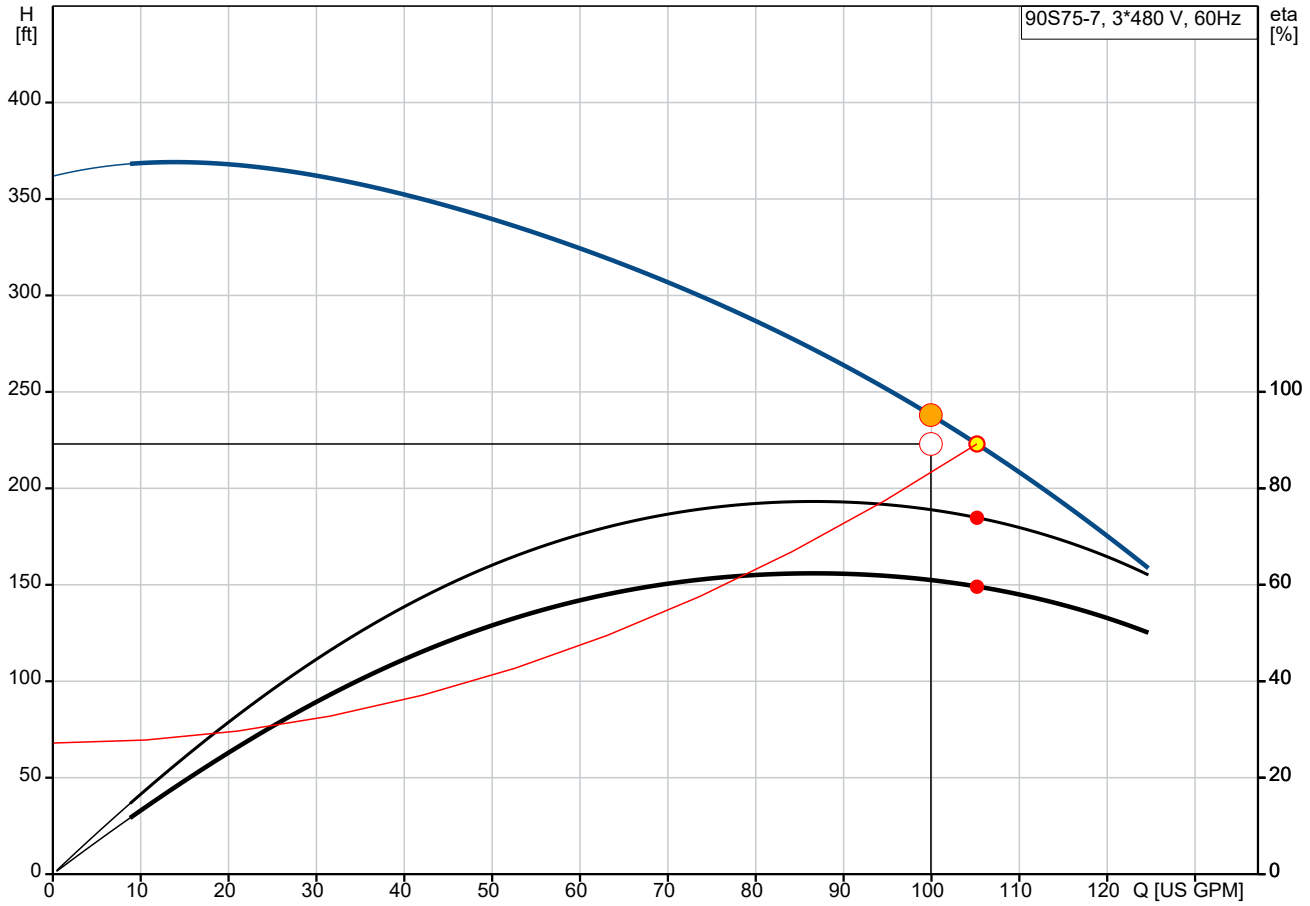

Q = 105 US GPM
Es = 1.1728 Wh/gal
Density = 62.29 lb/ft³
Eta pump+motor = 59.6 %

H = 223 ft
Pumped liquid = Water
Eta pump = 73.9 %

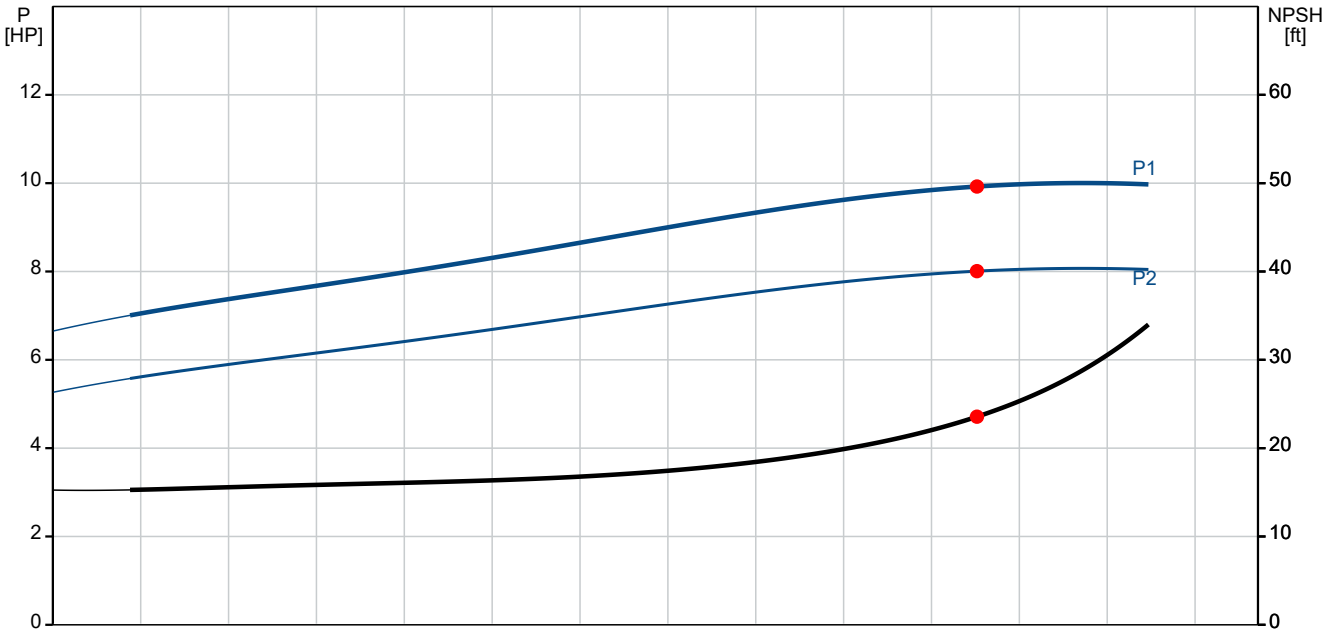

P1 = 7.406 kW
P2 = 8.01 HP
NPSH = 23.56 ft

Company name:
Created by:
Phone:

Date: 03/10/2025

Description	Value
General information:	
Product name:	90S75-7
Product No:	93050597
EAN number:	5715467047202
Technical:	
Pump speed on which pump data are based:	3450 rpm
Actual calculated flow:	105 US GPM
Rated flow:	96.9 US GPM
Resulting head of the pump:	223 ft
Rated head:	242.8 ft
Stages:	7
Number of reduced-diameter impellers:	NONE
Approvals:	CULDWUS,CCSAUS
Approvals for motor:	CCSAUS,C_UL_US_NSF 372
Approvals for drinking water:	PROP65
Curve tolerance:	ISO9906:2012 3B
Model:	B
Motor version:	T40
Return valve:	YES
Materials:	
Pump:	Stainless steel
	EN 1.4301
	AISI 304
Impeller:	Stainless steel
	EN 1.4301
	AISI 304
Motor:	Stainless steel
	EN 1.4301
	AISI 304
Shaft seal:	HM/Ceramics
Installation:	
Maximum ambient pressure:	870.23 psi
Maximum operating pressure:	870.23 psi
Maximum outlet pressure:	162.44 psi
Type of connection:	NPT(F)
Size of connection:	3 inch
Motor diameter:	4 inch
Minimum borehole diameter:	5.51 in
Liquid:	
Pumped liquid:	Water
Liquid temperature range:	5 .. 104 °F
Electrical data:	
Motor type:	MS4000
Motor flange design:	Grundfos
Rated power - P2:	7.5 HP
Power (P2) required by pump:	7.5 HP
KVA code:	J
Mains frequency:	60 Hz
Rated voltage:	3 x 440-460 V
Service factor:	1.15
Rated current:	11.4-11.7 A
Starting current:	560-580 %
Cos phi - power factor:	0.84-0.79
Rated speed:	3460-3480 rpm
Maximum axial load:	992 lb
Method of start:	Direct-on-line (DOL)

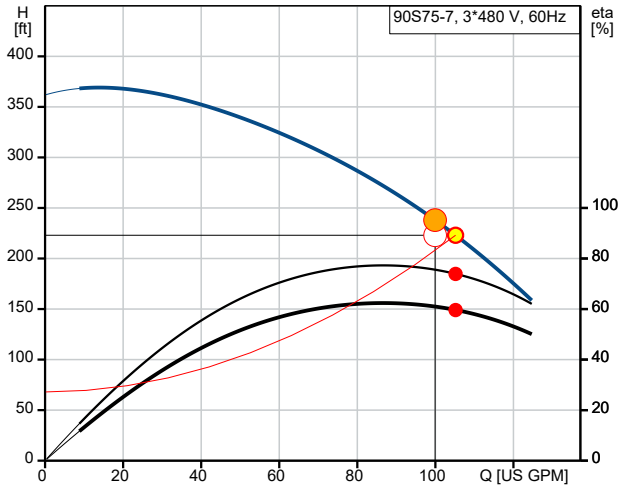

Q = 105 US GPM
Es = 1.1728 Wh/gal
Density = 62.29 lb/ft³
Eta pump+motor = 59.6 %

H = 223 ft
Pumped liquid = Water
Eta pump = 73.9 %

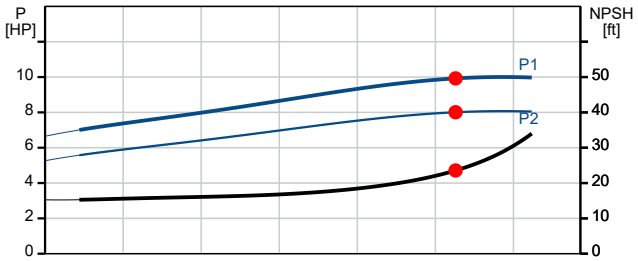

P1 = 7.406 kW
P2 = 8.01 HP
NPSH = 23.56 ft

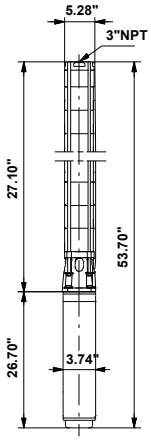

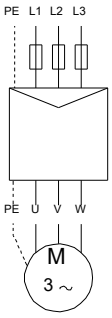

GRUNDFOS

Company name:
Created by:
Phone:

Date: 03/10/2025

Description	Value
Enclosure class (IEC 34-5):	IP68
Insulation class (IEC 85):	F
Ex-protection standard:	NONE
Thermal protection:	External
Built-in temp. transmitter:	Yes
Motor No:	92959963
Cable number:	N/A
Windings:	Enameled
Others:	
DOE Pump Energy Index CL:	0.84
Net weight:	88.9 lb
Gross weight:	98.8 lb
Shipping volume:	1.84 ft³

GRUNDFOS

Company name:
Created by:
Phone:

Date: 03/10/2025

93050597 90S75-7 60 Hz

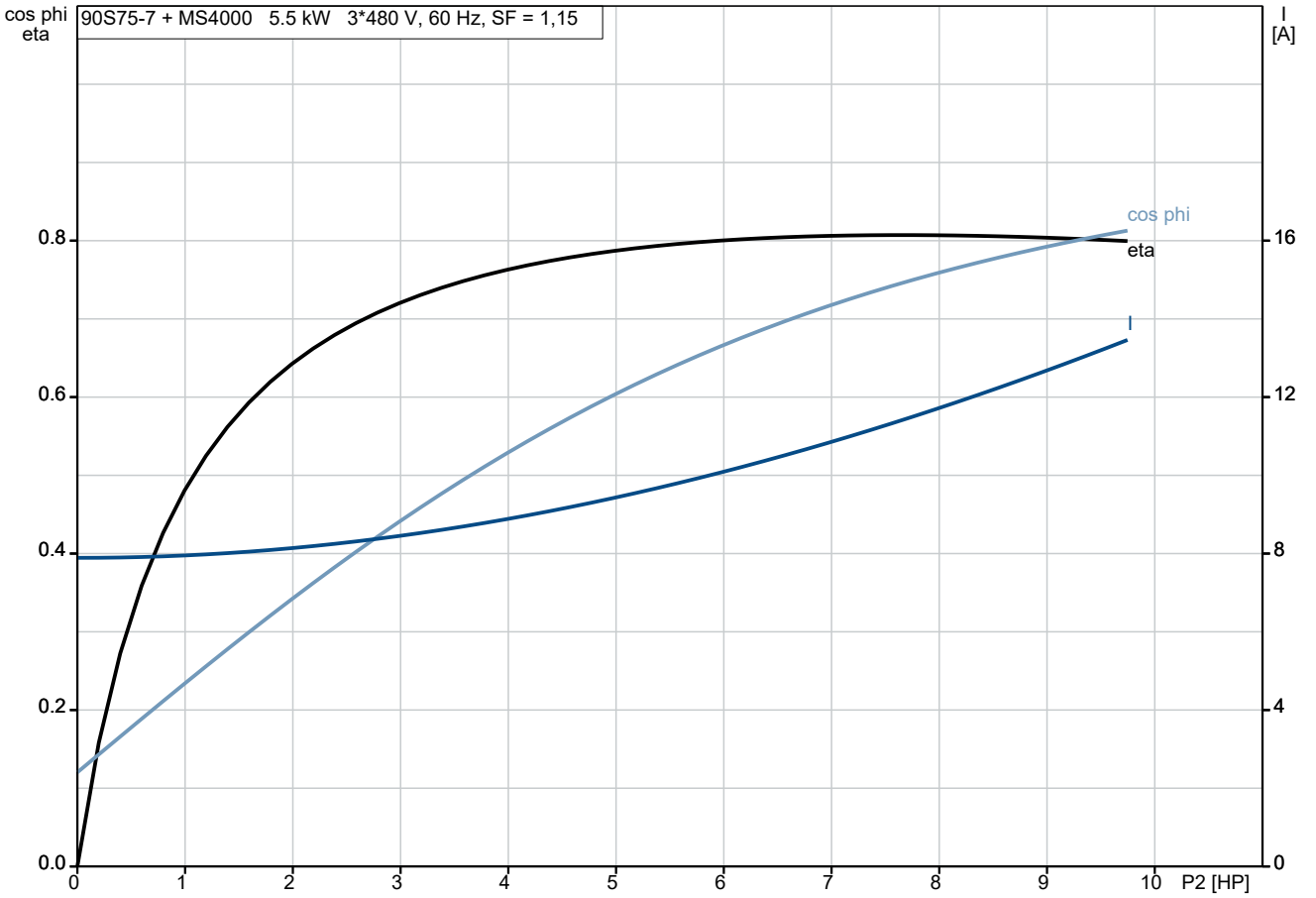

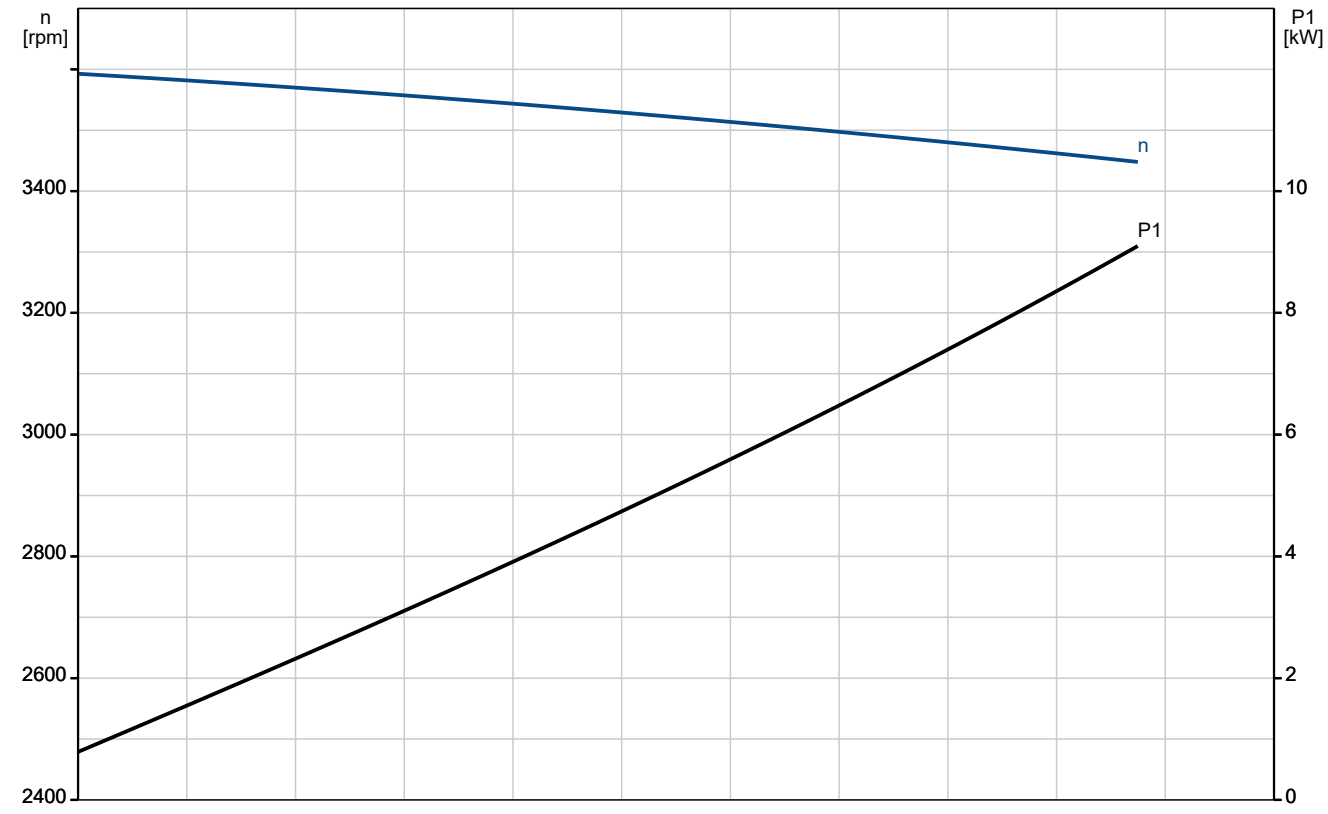

GRUNDFOS

Company name:
Created by:
Phone:

Date: 03/10/2025

93050597 90S75-7 60 Hz

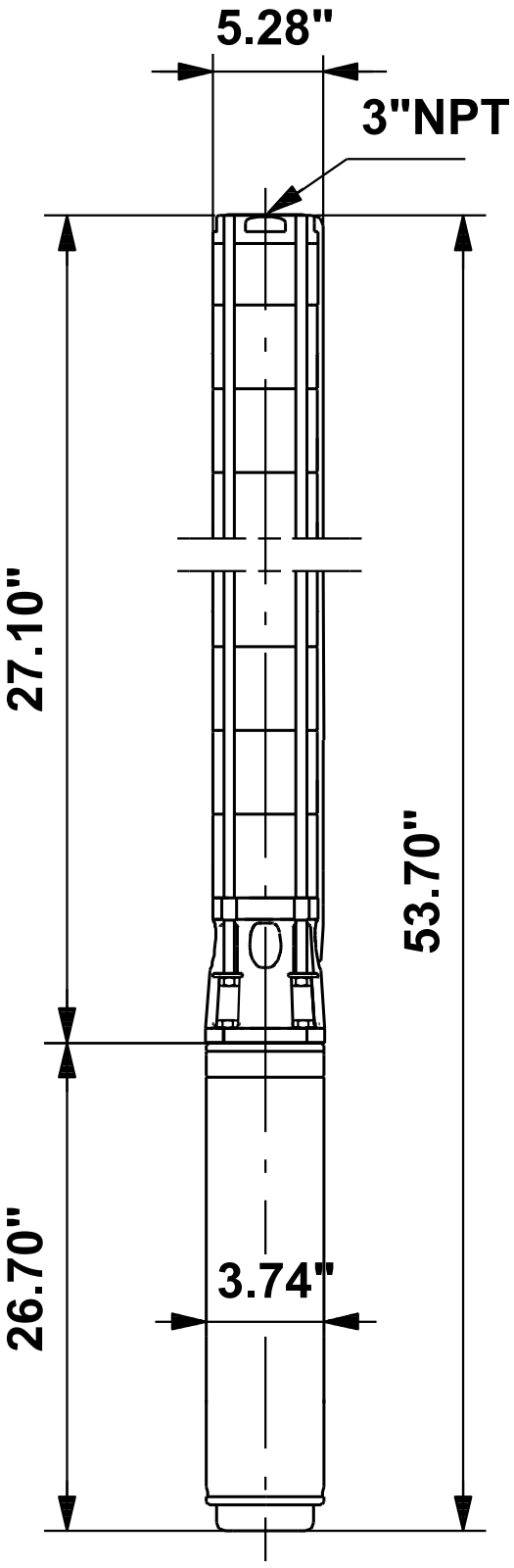

Note! All units are in [in] unless others are stated.
Disclaimer: This simplified dimensional drawing does not show all details.

93050597 90S75-7 60 Hz

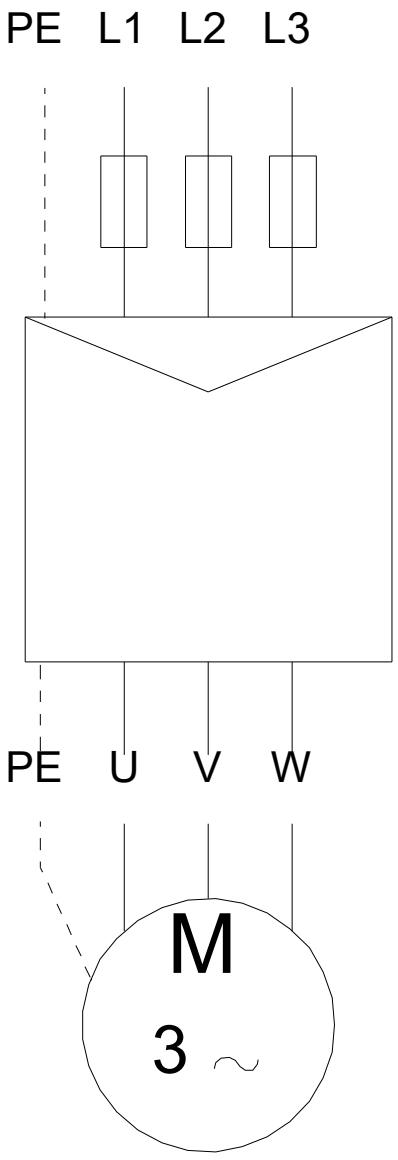

Note! All units are in [in] unless others are stated.

Company name:
Created by:
Phone:

Date: 03/10/2025

Installation and Input

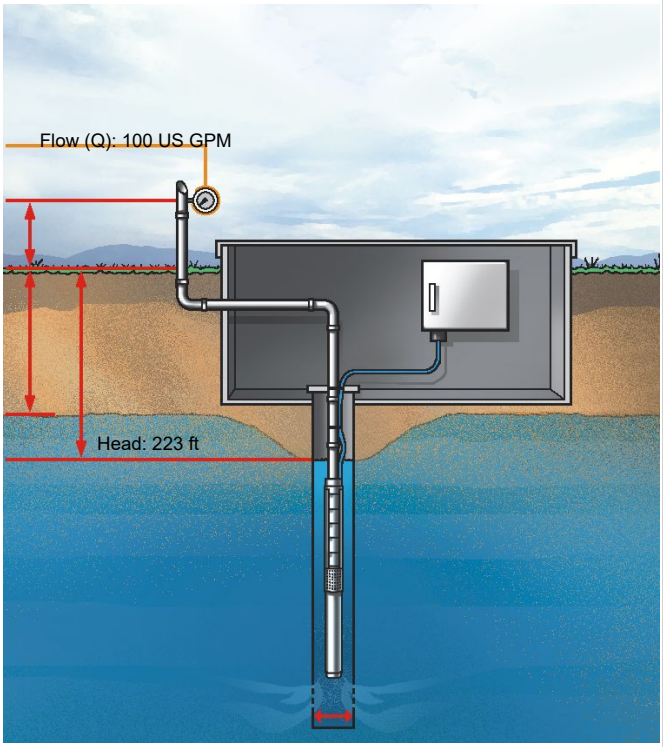

Sizing Results

Product number:	93050597
Type:	90S75-7
Flow:	105 US GPM (21902440)
H total:	223 ft
Power P1:	7.406 kW
Power P2 required in the duty point:	8.01 HP
Eta pump:	73.9 %
Eta motor:	80.7 %
Eta total:	59.6 %
Energy consumption:	26811 kWh/year
Spec. energy consumption:	1.2242 kWh/1000 gal (4.12 kWh/gal/ft)
Motor type:	MS4000
Phase:	3
Voltage:	440-460
Frequency:	60 Hz
Current (rated):	11.4 A
Current (actual):	11.7 A
Cos phi (actual):	0.76
Liquid max. temperature:	104 °F

Cable losses are not included !

Load profile

	1
Flow (%)	100
Flow (US gpm)	100
Head (%)	107
Head (ft)	238
P1 (kW)	7.345
Eta total (%)	61.0
Time (h/a)	3650
Energy consumption (kWh/Year)	26811
Quantity	1

Pump Curve

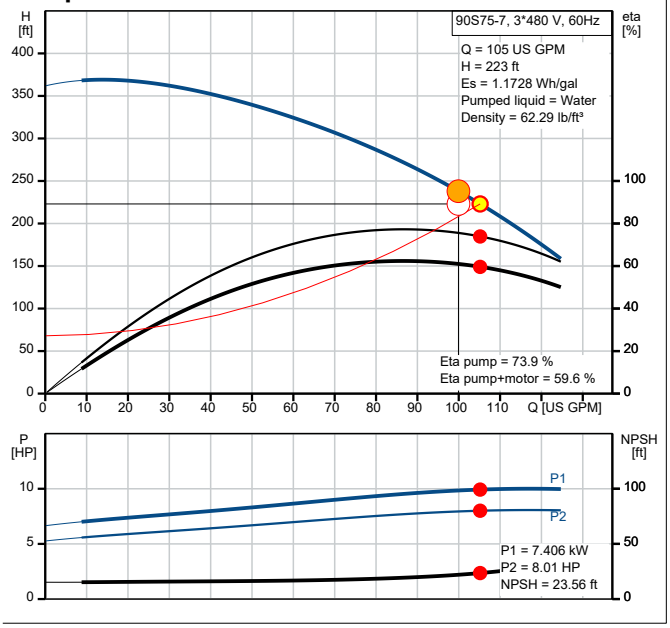

Dimensional Drawing

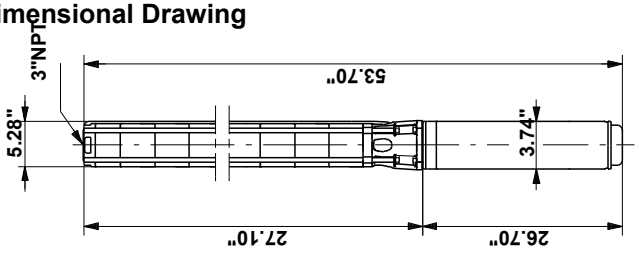

APPENDIX A

GEOTECHNICAL ENGINEERING RPEORT

Drinking Water Site

Geotechnical Engineering Report

April 3, 2025 | Terracon Project No. HN255025

Prepared for:

ESG Engineering Inc.
6400 Peake Road
Macon, GA 31210

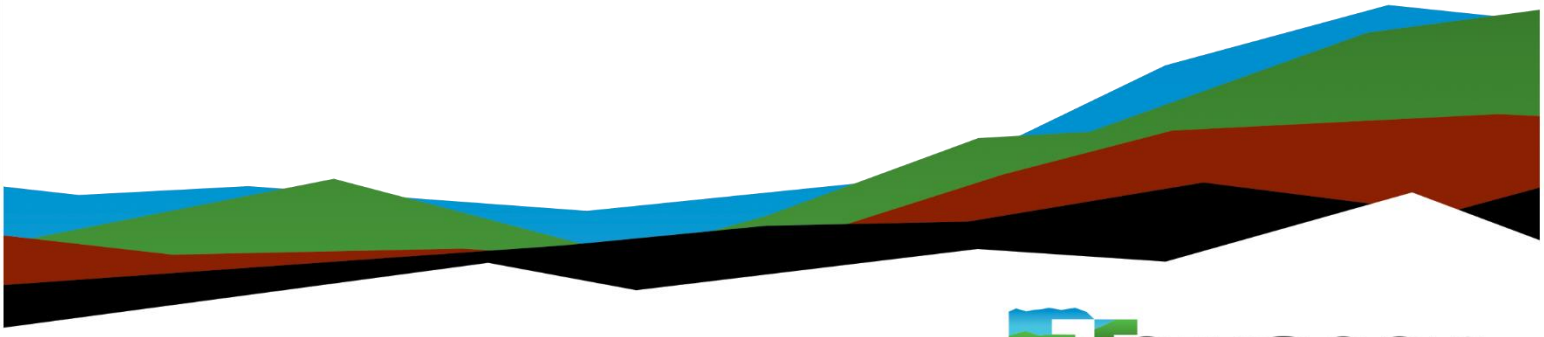

Terracon
Explore with us

Nationwide
Terracon.com

- Facilities
- Environmental
- Geotechnical
- Materials

514 Hillcrest Industrial Boulevard
Macon, GA 31204
P (478) 757-1606
Terracon.com

April 3, 2025

ESG Engineering Inc.
6400 Peake Road
Macon, GA 31210

Attn: Trey Crisp, RLA
P: (478) 335-4612
E: Trey.crisp@inframark.com

Re: Geotechnical Engineering Report
Drinking Water Site
Atlanta Highway
Flowery Branch, Georgia
Terracon Project No. HN255025

Dear Mr. Crisp:

We have completed the scope of Geotechnical Engineering services for the above referenced project in general accordance with Terracon Proposal No. PHN255025 dated February 5, 2025. This report presents the findings of the subsurface exploration and provides geotechnical recommendations concerning earthwork, pavement, and the design and construction of foundations and floor slabs for the proposed project.

We appreciate the opportunity to be of service to you on this project. If you have any questions concerning this report or if we may be of further service, please contact us.

Sincerely,

Terracon

GEORGIA REGISTERED No. 17394 PROFESSIONAL ENGINEER THOMAS E. DRIVER

Sai Subhash Teja Deevi, E.I.T.
Geotechnical Staff Engineer

Thomas E. Driver, P.E.
Director of Georgia Regional Operations

Table of Contents

Report Summary **4**
Introduction **1**
Project Description **1**
Site Conditions **2**
Geotechnical Characterization **3**
Groundwater 3
Seismic Site Class **4**
Site Geology **5**
Geotechnical Overview **5**
Earthwork **6**
Site Preparation 6
Subgrade Preparation 7
Excavation 8
Soil Stabilization 8
Fill Material Types 8
Fill Placement and Compaction Requirements 9
Utility Trench Backfill 10
Grading and Drainage 10
Earthwork Construction Considerations 11
Construction Observation and Testing 12
Foundations **12**
Helical Piles 13
Floor Slabs **13**
Floor Slab Design Parameters 13
Floor Slab Construction Considerations 14
Pavements **14**
Subgrade Preparation 14
Pavement Design Considerations 15
Estimates of Minimum Pavement Thickness 16
Pavement Drainage 18
Pavement Maintenance 18
General Comments **18**

Figures

GeoModel

Attachments

Exploration and Testing Procedures
Site Location and Exploration Plans
Exploration Results
Supporting Information

Note: This report was originally delivered in a web-based format. **Blue Bold** text in the report indicates a referenced section heading. The PDF version also includes hyperlinks which direct the reader to that section and clicking on the Terracon logo will bring you back to this page. For more interactive features, please view your project online at **client.terracon.com**.

Refer to each individual Attachment for a listing of contents.

Report Summary

Topic [1]	Overview Statement [2]
Project Description	The project will include the construction of a Drinking Water Site to include an 1800 SF building square metal framed structure, a detention pond, and associated pavements. A wetland delineation is currently being performed, so locations of the structure, pavements, and detention pond are subject to change. Our scope also included investigation of an alternate adjacent site.
Geotechnical Characterization	The subsurface investigation revealed that the site is underlain by existing fill material extending up to approximately twenty (20) feet below the surface. Beneath the fill materials, alluvium and Piedmont residual soils were encountered. The soils encountered during the exploration are generally classified as low consistency materials, indicating relatively very soft to soft conditions. Groundwater was first observed in boring B-1 at a depth of 6 feet, B-2 at 8 feet, PD-2 at 12 feet, and PD-1 at 7 feet and at 6’10” at the completion of the exploration.
Earthwork	We recommend proof rolling the structure pads after site stripping and before placing structural fill. Replace any loose and unstable areas with engineered fill. Undercutting and stabilization will likely be needed prior to fill placement.
Foundations	Due to the potential of significant total and differential settlement, shallow foundations are not recommended for the building addition. We recommend helical piles be given primary consideration for this site due to the shallow depth to groundwater and the nature of the subsurface material.
Pavements	Pavements should be separated from the high plasticity/elasticity soils encountered at this site with a minimum of 12 inches of suitable structural fill. Due to the deeper low consistency soils encountered at the site, we recommended a layer of geogrid such as Tensar NX-650 (light duty) or Tensar NX-750 (heavy duty) be included in pavement design. After undercutting and replacement of the upper 12 inches of highly plastic or elastic soils, the subgrade should be prepared as noted in **Earthwork**. Light Duty Asphalt (minimum) 2” Asphalt Surface Course, 8” Aggregate Base, Geogrid Heavy Duty Asphalt (minimum)

	1.25” Asphalt Surface Course, 1.75” Asphalt Binder Course, 12” Aggregate Base, Geogrid Light Duty Portland Cement Concrete (PCC) Pavement 5” PCC, 6” Aggregate Base, Geogrid Heavy Duty Portland Cement Concrete (PCC) Pavement 6½” PCC, 6” Aggregate Base, Geogrid
General Comments	This section contains important information about the limitations of this geotechnical engineering report.

1. If the reader is reviewing this report as a pdf, the topics above can be used to access the appropriate section of the report by simply clicking on the topic itself.
2. This summary is for convenience only. It should be used in conjunction with the entire report for design purposes.

Introduction

This report presents the results of our subsurface exploration and Geotechnical Engineering services performed for the proposed Drinking Water Site to be located at Atlanta Highway in Flowery Branch, Georgia. The purpose of these services was to provide information and geotechnical engineering recommendations relative to:

- Subsurface soil conditions
- Groundwater conditions
- Seismic site classification per IBC
- Site preparation and earthwork
- Foundation design and construction
- Floor slab design and construction
- Pavement design and construction

The geotechnical engineering Scope of Services for this project included the advancement of test borings, engineering analysis, and preparation of this report.

Drawings showing the site and boring locations are shown on the **Site Location** and **Exploration Plan**, respectively. The results of our field exploration are included on the boring logs in the **Exploration Results** section.

Project Description

Our initial understanding of the project was provided in our proposal and was discussed during project planning. A period of collaboration has transpired since the project was initiated, and our final understanding of the project conditions is as follows:

Item	Description
Information Provided	An email request was received on February 3, 2025, from Mr. Trey Crisp, RLA for a proposal for geotechnical services. The request included a site plan.

Item	Description
Project Description	The project will include the construction of a Drinking Water Site to include an 1800 SF building square metal framed structure, a detention pond, and associated pavements. A wetland delineation is currently being performed so locations of the structure, pavements, and detention pond are subject to change. Our scope also included investigation of an alternate adjacent site. During a phone call on March 24, 2025, between Trey Crisp and Stephen Boltja, Mr. Crisp indicated that development/construction in the area of Borings PD-1 and PD-2 is not currently being considered due to the City of Flowery Branch's additional requirements for the wetlands buffer. Should construction in this area be considered please notify us so that we may review the plans and revise our recommendations.
Finished Floor Elevation	Finished floor elevations were not provided
Maximum Loads	Anticipated structural loads were not provided
Below-Grade Structures	A detention pond. (No longer planned)
Free-Standing Retaining Walls	None anticipated
Building Code	IBC 2018 with Georgia Amendments

Terracon should be notified if any of the above information is inconsistent with the planned construction, especially the grading limits, as modifications to our recommendations may be necessary.

Site Conditions

The following description of site conditions is derived from our site visit in association with the field exploration and our review of publicly available geologic and topographic maps.

Item	Description
Parcel Information	The project is located at Atlanta Highway in Flowery Branch, Georgia. The area to be developed is approximately 2.3 acres in size. Latitude/Longitude (approximate): 34.190877° N 83.918315° W **Site Location**

Item	Description
Existing Improvements	The site appears to be wooded
Current Ground Cover	Wooded areas
Existing Topography	The existing site has elevation ranging from approximately 1,111 feet to 1,129 feet and slopes downward from Atlanta Highway to a creek.

Geotechnical Characterization

We have developed a general characterization of the subsurface conditions based upon our review of the subsurface exploration, geologic setting, and our understanding of the project. This characterization, termed GeoModel, forms the basis of our geotechnical calculations and evaluation of the site. Conditions observed at each exploration point are indicated on the individual logs. The individual logs can be found in the **Exploration Results** and the GeoModel can be found in the **Figures** attachment of this report.

As part of our analyses, we identified the following models for this site within the subsurface profile. For a more detailed view of the model layer depths at each boring location, refer to the GeoModel.

Model Layer	Layer Name	General Description
1	**Topsoil**	Topsoil
2	**Fill**	Fill - Sandy Fat Clay (CH), Fill - Sandy Silt (ML), Fill - Silty Clayey Sand (SC-SM), Fill - Sandy Lean Clay (CL), Fill - Clayey Sand (SC)
3	**Alluvium**	Alluvial Sandy Fat Clay (CH)
4	**Piedmont Residuum**	Sandy Fat Clay (CH)
5	**Piedmont Residuum**	Elastic Silt (MH), Sandy Elastic Silt (MH)
6	**Piedmont Residuum**	Sandy Silt (ML)

Groundwater

Groundwater was first observed in boring B-1 at a depth of 6 feet, B-2 at 8 feet, PD-2 at 12 feet, and PD-1 at 7 feet and at 6’10” at the completion of the exploration.

Boring Number	Elevation (Feet)[1]	Depth to Groundwater (Feet)		Cave in depth (Feet)
		Drilling[2]	At completion[3]	
B-1	1115.5	6	-	5
B-2	1120.2	8	-	7.5
P-1	1118.5	N/E	N/E	N/E
PD-1	1111.5	7	6.8	-
PD-2	1118.1	12	-	11.5

1. Elevations were obtained from ESG drawing, Flowery Branch Site, Sheet 1, dated March 6, 2025.
2. Groundwater level measured at the time of drilling.
3. Groundwater level measured at completion of drilling.

Groundwater level fluctuations occur due to seasonal variations in the amount of rainfall, runoff and other factors not evident at the time the borings were performed. In addition, perched water can develop over low permeability soil or rock strata. Therefore, groundwater levels during construction or at other times in the life of the structure may be higher or lower than the levels indicated on the boring logs. The possibility of groundwater level fluctuations should be considered when developing the design and construction plans for the project.

Seismic Site Class

The seismic design requirements for buildings and other structures are based on Seismic Design Category. Site Classification is required to determine the Seismic Design Category for a structure. The Site Classification is based on the upper 100 feet of the site profile defined by a weighted average value of either shear wave velocity, standard penetration resistance, or undrained shear strength in accordance with Section 20.4 of ASCE 7 and the International Building Code (IBC). Based on the soil properties observed at the site and as described on the exploration logs and results, our professional opinion is that a **Seismic Site Classification of D** be considered for the project. Subsurface explorations at this site were extended to a maximum depth of 25 feet. The site properties below the boring depth to 100 feet were estimated based on our experience and knowledge of geologic conditions of the general area. Additional deeper borings or geophysical testing may be performed to confirm the conditions below the current boring depth.

Site Geology

The project site is located in the Piedmont Physiographic Province of Georgia which is characterized by medium to high grade metamorphic rocks and scattered igneous intrusions. The term metamorphic describes rocks that have been subjected to high temperatures and/or pressures, usually deep within the earth's crust. These high temperatures and pressures cause the textural and mineralogical characteristics of the original rock to be altered and can also cause certain rock types to fully melt, becoming what is known as magma. Magma is less dense than the surrounding solidified rock and tends to move upward through fractures and joints, displacing the surrounding rock. This rock type is known as an igneous intrusion. Metamorphic rocks are predominant in this region but due to erosion and uplift, both of these rocks will eventually become exposed at the land surface.

The subsurface bedrock in this region has undergone differing rates of weathering, which often produces a considerable variation in depth to competent rock over short horizontal distances. It is also not unusual for lenses and boulders of hard rock and zones of partially weathered rock to be present within the soil mantle above the general bedrock level. The typical residual soil profile consists of clayey soils near the surface, where soil weathering is more advanced, underlain by sandy silts and silty sands, which often consist of saprolites (native soils which maintain the original fabric of the parent rock). Generally, the soil becomes harder with depth to the top of parent crystalline rock or "massive bedrock" which occurs at depth.

The boundary between soil and rock is typically not sharply defined. A transitional zone termed "partially weathered rock" is normally found overlying bedrock. Partially weathered rock (PWR) is defined for engineering purposes as residual material with a standard penetration resistance exceeding 100 blows per foot (bpf).

Geotechnical Overview

The site appears suitable for the proposed construction based upon geotechnical conditions encountered in the test borings, provided that the recommendations presented in this report are implemented in the design and construction phases of this project.

The subsurface investigation revealed that the site is underlain by existing fill material extending up to approximately twenty (20) feet below the surface. Beneath this, the fill transitions into Piedmont residual soils, which are characteristic of the region. The soils encountered during the exploration are generally classified as low blow consistency materials, indicating relatively very soft to soft conditions. The standard penetration test (SPT) N-values in the fill material ranged from 2 blows per foot (bpf) to 22 bpf. The SPT N-values in the residual soils ranged from 2 bpf to 14 bpf.

Support of floor slabs and pavements on or above existing fill materials is discussed in this report. However, even with the recommended construction procedures, there is inherent risk for the owner that compressible fill or unsuitable material, within or buried by the fill, will not be discovered. This risk of unforeseen conditions cannot be eliminated without completely removing the existing fill but can be reduced by following the recommendations contained in this report. To take advantage of the cost benefit of not removing the entire amount of undocumented fill, the owner must be willing to accept the risk associated with building over the undocumented fills following the recommended reworking of the material. Should this be the case, development can be supported on a shallow foundation system.

Based on the conditions encountered and estimated load-settlement relationships, we do not recommend shallow foundations for this site. The **Foundations** section includes a discussion on the use of helical piles, which would be appropriate for this site. The **Floor Slabs** section addresses slab-on-grade support of the building. The **Pavements** section addresses the design of pavement systems.

The recommendations contained in this report are based upon the results of field testing (presented in the **Exploration Results**), engineering analyses, and our current understanding of the proposed project. The **General Comments** section provides an understanding of the report limitations.

Earthwork

Earthwork is anticipated to include topsoil stripping, excavations, and engineered fill placement. The following sections provide recommendations for use in the preparation of specifications for the work. Recommendations include critical quality criteria, as necessary, to render the site in the state considered in our geotechnical engineering evaluation for foundations and floor slabs.

Earthwork on the project should be observed and evaluated by Terracon Consultants Inc. The evaluation of earthwork should include observation and testing of engineered fill, subgrade preparation, foundation bearing soils, and other geotechnical conditions exposed during the construction of the project and identified in this report.

High plasticity (CH) soils are present on the site and, if excavated, should not be used with the upper 18 inches below structural foundations, floor slabs, or within 12 inches of pavement systems. If encountered at the subgrade level, these soils should be undercut to 18 inches below foundations and twelve inches below floor slabs and pavement systems.

Site Preparation

Prior to placing fill or removing soil in cut areas, the existing vegetation, topsoil, and root mats should be removed. Any existing asphalt, concrete, curbing, and other non-soil items

should be removed. Care should be taken to remove any below grade footings or utilities in the structural areas of the site. Any removed materials should be properly backfilled in accordance with the recommendations contained in this report. Complete stripping of the topsoil should be performed in the proposed building and parking/driveway areas.

Where fill is placed on existing slopes or slopes generated during site undercutting steeper than 5H:1V, benches should be cut into the existing slopes prior to fill placement. The benches should have a minimum vertical face height of 1 foot and a maximum vertical face height of 3 feet and should be cut wide enough to accommodate the compaction equipment. This benching will help provide a positive bond between the fill and natural soils and reduce the possibility of failure along the fill/natural soil interface.

Subgrade Preparation

Structural fill placed beneath the entire footprint of the building addition should extend horizontally a minimum distance of 10 feet beyond the outside edge of footings. Portions of the near-surface materials anticipated to be developed as excavation spoils should be further evaluated for use as structural fill.

The subgrade should be proof rolled with an adequately loaded vehicle such as a fully loaded tandem-axle dump truck. The proof rolling should be performed under the observation of the Geotechnical Engineer or representative. Areas excessively deflecting under the proof roll should be delineated and subsequently addressed by the Geotechnical Engineer. Excessively wet or dry material should either be removed, or moisture conditioned and recompacted. We anticipate that, based on the SPT values in the soil borings, some undercutting or reworking of the near surface soils will be required. Soil stabilization, as discussed later in this report, will likely be needed as well. Actual remedial actions can best be determined at the time of construction.

Undercut soils free of organics may be reused for fill after moisture conditioning. All exposed areas which will receive fill, once properly cleared and benched where necessary, should be scarified to a minimum depth of 10 inches, moisture conditioned as necessary, and compacted per the compaction requirements in this report. Compacted structural fill soils should then be placed to the proposed design grade and the moisture content and compaction of subgrade soils should be maintained until foundation or pavement construction.

Based upon the subsurface conditions determined from the geotechnical exploration, subgrade soils exposed during construction are anticipated to be relatively workable; however, the workability of the subgrade may be affected by precipitation, repetitive construction traffic or other factors. If unworkable conditions develop, workability may be improved by scarifying and drying.

Excavation

We anticipate that excavations for the proposed construction can be accomplished with conventional earthmoving equipment. The bottom of excavations should be thoroughly cleaned of loose soils and disturbed materials prior to backfill placement and/or construction.

Soil Stabilization

If the exposed subgrade is unstable during proof rolling operations, it could be stabilized using one of the methods outlined below.

- **Undercutting and Replacement** – Highly Plastic/Elastic soils should be undercut a minimum of 18 inches beneath foundations and 12 inches in pavement areas. Exposed subgrades should be stabilized prior to replacement of the removed soils. Removed soils should be replaced with structural fill placed per the recommendations in this report.
- **Scarification and Recompaction** - It may be feasible to scarify, dry, and recompact the exposed soils. The success of this procedure would depend primarily upon favorable weather and sufficient time to dry the soils. Stable subgrades likely would not be achievable if the thickness of the unstable soil is greater than about 1 foot, if the unstable soil is at or near groundwater levels, or if construction is performed during a period of wet or cool weather when drying is difficult.
- **Crushed Stone** - The use of crushed stone or crushed gravel is a common procedure to improve subgrade stability. Typical undercut depths would be expected to range from about 8 to 12 inches below finished subgrade elevation. The use of high modulus geotextiles (i.e., engineering fabric or geogrid) could also be considered after underground work such as utility construction is completed. Prior to placing the fabric or geogrid, we recommend that all below grade construction, such as utility line installation, be completed to avoid damaging the fabric or geogrid. Equipment should not be operated above the fabric or geogrid until one full lift of crushed stone fill is placed above it. The maximum particle size of granular material placed over geotextile fabric or geogrid should not exceed 1-1/2 inches.

Further evaluation of the need and recommendations for undercutting and subgrade stabilization can be provided during construction as the geotechnical conditions are exposed.

Fill Material Types

Fill required to achieve design grade should be classified as structural fill and general fill. Structural fill is material used below, or within 10 feet of structures, pavements or constructed slopes. General fill is material used to achieve grade outside of these areas.

Reuse of On-Site Soil: Excavated on-site soil may be selectively reused as fill based on the subsurface exploration. Actual material suitability should be determined in the field at time of construction. Moisture conditioning will likely be required prior to reuse as fill.

Imported Fill Materials: Imported fill materials should meet the following material property requirements. Regardless of its source, compacted fill should consist of approved materials that are free of organic matter and debris. Frozen material should not be used, and fill should not be placed on a frozen subgrade.

Soil Type [1]	USCS Classification	Acceptable Parameters (for Structural Fill)
Low Plasticity Cohesive	CL, CL-ML ML, SM, SC	Liquid Limit less than 45, Plasticity index less than 25 Less than 25% retained on No. 200 sieve
Granular	GW, GP, GM, GC, SW, SP, SM, SC	Less than 50% passing No. 200 sieve

1. Structural and general fill should consist of approved materials free of organic matter and debris. Frozen material should not be used, and fill should not be placed on a frozen subgrade. A sample of each material type should be submitted to the Geotechnical Engineer for evaluation prior to use on this site. Additional geotechnical consultation should be provided prior to use of uniformly graded gravel on the site.

Fill Placement and Compaction Requirements

Structural and general fill should meet the following compaction requirements.

Item	Structural Fill	General Fill
Maximum Lift Thickness	8 inches or less in loose thickness when heavy, self-propelled compaction equipment is used 4 to 6 inches in loose thickness when hand-guided equipment (i.e. jumping jack or plate compactor) is used	Same as structural fill
Minimum Compaction Requirements [1,2]	98% of max. dry density below foundations and within 1 foot of finished pavement subgrade 95% of max. dry density above foundations, below floor slabs, and more than 1 foot below finished pavement subgrade	92% of max. dry density

Item	Structural Fill	General Fill
Water Content Range [1]	-3% to +3% of optimum	As required to achieve min. compaction requirements

1. Maximum dry density and optimum water content as determined by the standard Proctor test (ASTM D 698).
2. High plasticity cohesive fill should not be compacted to more than 100% of standard Proctor maximum dry density.

Utility Trench Backfill

Any soft or unsuitable materials encountered at the bottom of utility trench excavations should be removed and replaced with structural fill or bedding material in accordance with public works specifications for the utility being supported. This recommendation is particularly applicable to utility work requiring grade control and/or in areas where subsequent grade raising could cause settlement in the subgrade supporting the utility. Trench excavation should not be conducted below a downward 1:1 projection from existing foundations without engineering review of shoring requirements and geotechnical observation during construction.

Trench backfill should be mechanically placed and compacted as discussed earlier in this report. Compaction of initial lifts should be accomplished with hand-operated tampers or other lightweight compactors. Where trenches are placed beneath slabs or footings, the backfill should satisfy the gradation and expansion index requirements of engineered fill discussed in this report. Flooding or jetting for placement and compaction of backfill is not recommended.

For low permeability subgrades, utility trenches are a common source of water infiltration and migration. Utility trenches penetrating beneath the building should be effectively sealed to restrict water intrusion and flow through the trenches, which could migrate below the building. The trench should provide an effective trench plug that extends at least 5 feet from the face of the building exterior. The plug material should consist of cementitious flowable fill or low permeability clay. The trench plug material should be placed to surround the utility line. If used, the clay trench plug material should be placed and compacted to comply with the water content and compaction recommendations for structural fill stated previously in this report.

Grading and Drainage

All grades must provide effective drainage away from the building during and after construction and should be maintained throughout the life of the structure. Water retained next to the building can result in soil movements greater than those discussed in this report. Greater movements can result in unacceptable differential floor slab and/or

foundation movements, cracked slabs and walls, and roof leaks. The roof should have gutters/drains with downspouts that discharge onto splash blocks at a distance of at least 10 feet from the building.

Exposed ground should be sloped and maintained at a minimum of 5% away from the building for at least 10 feet beyond the perimeter of the building. Locally, flatter grades may be necessary to transition ADA access requirements for flatwork. After building construction and landscaping have been completed, final grades should be verified to document effective drainage has been achieved. Grades around the structure should also be periodically inspected and adjusted, as necessary, as part of the structure's maintenance program. Where paving or flatwork abuts the structure, a maintenance program should be established to effectively seal and maintain joints and prevent surface water infiltration.

Earthwork Construction Considerations

Shallow excavations for the proposed structures are anticipated to be accomplished with conventional construction equipment. Upon completion of filling and grading, care should be taken to maintain the subgrade water content prior to construction of grade-supported improvements such as floor slabs and pavements. Construction traffic over the completed subgrades should be avoided. The site should also be graded to prevent ponding of surface water on the prepared subgrades or in excavations. Water collecting over or adjacent to construction areas should be removed. If the subgrade freezes, desiccates, saturates, or is disturbed, the affected material should be removed, or the materials should be scarified, moisture conditioned, and recompacted prior to floor slab construction.

As a minimum, excavations should be performed in accordance with OSHA 29 CFR, Part 1926, Subpart P, "Excavations" and its appendices, and in accordance with any applicable local and/or state regulations.

Construction site safety is the sole responsibility of the contractor who controls the means, methods, and sequencing of construction operations. Under no circumstances shall the information provided herein be interpreted to mean Terracon is assuming responsibility for construction site safety or the contractor's activities; such responsibility shall neither be implied nor inferred.

Excavations or other activities resulting in ground disturbance have the potential to affect adjoining properties and structures. Our scope of services does not include review of available final grading information or consider potential temporary grading performed by the contractor for potential effects such as ground movement beyond the project limits. A preconstruction/ precondition survey should be conducted to document nearby property/infrastructure prior to any site development activity. Excavation or ground disturbance activities adjacent or near property lines should be monitored or instrumented

for potential ground movements that could negatively affect adjoining property and/or structures.

Construction Observation and Testing

The earthwork efforts should be observed by the Geotechnical Engineer (or others under their direction). Observation should include documentation of adequate removal of surficial materials (vegetation, topsoil, and pavements), evaluation and remediation of existing fill materials, as well as proof rolling and mitigation of unsuitable areas delineated by the proof roll.

Each lift of compacted fill should be tested, evaluated, and reworked, as necessary, as recommended by the Geotechnical Engineer prior to placement of additional lifts. Each lift of fill should be tested for density and water content at a frequency of at least one test for every 2,500 square feet of compacted fill in the building areas and 5,000 square feet in pavement areas. Where not specified by local ordinance, one density and water content test should be performed for every 100 linear feet of compacted utility trench backfill and a minimum of one test performed for every 12 vertical 3 inches of compacted backfill.

In areas of foundation excavations, the bearing subgrade should be evaluated by the Geotechnical Engineer. If unanticipated conditions are observed, the Geotechnical Engineer should prescribe mitigation options.

In addition to the documentation of the essential parameters necessary for construction, the continuation of the Geotechnical Engineer into the construction phase of the project provides the continuity to maintain the Geotechnical Engineer’s evaluation of subsurface conditions, including assessing variations and associated design changes.

In areas of foundation excavations, the bearing subgrade should be evaluated by the Geotechnical Engineer (or his representative). If unanticipated conditions are observed, the Geotechnical Engineer should prescribe mitigation options.

In addition to the documentation of the essential parameters necessary for construction, the continuation of the Geotechnical Engineer into the construction phase of the project provides the continuity to maintain the Geotechnical Engineer’s evaluation of subsurface conditions, including assessing variations and associated design changes.

Foundations

Due to the depth of the low consistency soils and the shallow depth to groundwater, shallow foundations are not suitable for this site.

Helical Piles

Helical piles can be used to support the structure at the site. Helical pile systems are typically installed by design-build contractors who will provide sealed construction drawings based on geotechnical information provided by others. The critical aspect of helical pile installation is achieving the design torque required to install each pile, which correlates to the capacity for a given pile type and size as determined by the pile manufacturer. Minimum embedment depths should also be anticipated based on the subsurface information. In general, helical pile systems can be designed to achieve total settlement on the order of 1 inch or less and differential settlement on the order of ½ inch or less. Based on the boring data for this project, we anticipate that the helical piles would need to be extended to depths on the order of 20 to 25 feet, depending on required capacities.

We recommend that you contact helical pile contractors to review and analyze the subsurface data in this report, as well as the proposed structural loads for the project, and to obtain a cost estimate for helical pile installation. We also recommend that the helical pile installation be monitored full time by the Owner's geotechnical consultant. The QC program should include observation of pile spacing, pile types installed, embedment depths and torque achieved upon installation. Terracon is available to provide assistance as needed during the design process.

Floor Slabs

Design parameters for floor slabs assume the requirements for **Earthwork** have been followed, which includes 12 inches of separation for any highly plastic/elastic soils. Specific attention should be given to positive drainage away from the structure and positive drainage of the aggregate base beneath the floor slab.

Floor Slab Design Parameters

Item	Description
Floor Slab Support[1]	Minimum 12 inches of approved on-site or imported soils placed and compacted in accordance with the recommendations in **Earthwork**.
Estimated Modulus of Subgrade Reaction [2]	100 pounds per square inch per inch (psi/in) for point loads
Subbase	4 inches granular material

1. Floor slabs should be structurally independent of building footings or walls to reduce the possibility of floor slab cracking caused by differential movements between the slab and foundation.
2. Modulus of subgrade reaction is an estimated value based upon our experience with the subgrade condition, the requirements noted in **Earthwork**, and the floor slab support as

noted in this table. It is provided for point loads. For large area loads the modulus of subgrade reaction would be lower.

The use of a vapor retarder should be considered beneath concrete slabs on grade covered with wood, tile, carpet, or other moisture sensitive or impervious coverings, when the project includes humidity-controlled areas, or when the slab will support equipment sensitive to moisture. When conditions warrant the use of a vapor retarder, the slab designer should refer to ACI 302 and/or ACI 360 for procedures and cautions regarding the use and placement of a vapor retarder.

Saw-cut contraction joints should be placed in the slab to help control the location and extent of cracking. For additional recommendations, refer to the ACI Design Manual. Joints or cracks should be sealed with a waterproof, non-extruding compressible compound specifically recommended for heavy duty concrete pavement and wet environments.

Where floor slabs are tied to perimeter walls or turn-down slabs to meet structural or other construction objectives, our experience indicates differential movement between the walls and slabs will likely be observed in adjacent slab expansion joints or floor slab cracks beyond the length of the structural dowels. The Structural Engineer should account for potential differential settlement through use of sufficient control joints, appropriate reinforcing or other means.

Floor Slab Construction Considerations

Finished subgrade, within and for at least 10 feet beyond the floor slab, should be protected from traffic, rutting, or other disturbance and maintained in a relatively moist condition until floor slabs are constructed. If the subgrade should become damaged or desiccated prior to construction of floor slabs, the affected material should be removed, and structural fill should be added to replace the resulting excavation. Final conditioning of the finished subgrade should be performed immediately prior to placement of the floor slab support course.

The Geotechnical Engineer should observe the condition of the floor slab subgrades immediately prior to placement of the floor slab support course, reinforcing steel, and concrete. Attention should be paid to high traffic areas that were rutted and disturbed earlier, and to areas where backfilled trenches are located.

Pavements

Subgrade Preparation

On most project sites, the site grading is accomplished relatively early in the construction phase. Fills are placed and compacted in a uniform manner. However, as construction

proceeds, excavations are made into these areas, rainfall and surface water saturates some areas, heavy traffic from concrete trucks and other delivery vehicles disturbs the subgrade and many surface irregularities are filled in with loose soils to improve trafficability temporarily. As a result, the pavement subgrades, initially prepared early in the project, should be carefully evaluated as the time for pavement construction approaches.

We recommend the removal of the upper 12 inches of highly plastic/elastic soils. We recommend the moisture content and density of the top 12 inches of the exposed subgrade be evaluated, and the exposed subgrades be proofrolled. Once the exposed subgrade is stabilized, the removed soils should be replaced in accordance with the recommendations of structural fill in this report. The recommended pavement section includes a layer of geogrid as detailed in the **Estimates of Minimum Pavement Thicknesses** table. Paving operations should begin within two days subgrade being prepared. Areas not in compliance with the required ranges of moisture or density should be moisture conditioned and recompacted. Particular attention should be paid to high traffic areas that were rutted and disturbed earlier and to areas where backfilled trenches are located. Areas where unsuitable conditions are located should be repaired by removing and replacing the materials with properly compacted fills. If a significant precipitation event occurs after the evaluation or if the surface becomes disturbed, the subgrade should be reviewed by qualified personnel immediately prior to paving. The subgrade should be in its finished form at the time of the final review.

After proofrolling and repairing subgrade deficiencies, the entire subgrade should be scarified and developed as recommended in the **Earthwork** section of this report to provide a uniform subgrade for pavement construction. Areas that appear severely desiccated following site stripping may require further undercutting and moisture conditioning.

Pavement Design Considerations

Traffic patterns and anticipated loading conditions were not available at the time that this report was prepared. However, we anticipate that traffic loads will be produced primarily by automobile traffic and occasional delivery and trash removal trucks. The thickness of pavements subjected to heavy truck traffic should be determined using expected traffic volumes, vehicle types, and vehicle loads and should be in accordance with local, city or county ordinances.

Pavement thickness can be determined using AASHTO, Asphalt Institute and/or other methods if specific wheel loads, axle configurations, frequencies, and desired pavement life are provided. Terracon can provide thickness recommendations for pavements subjected to loads other than personal vehicle and occasional delivery and trash removal truck traffic if this information is provided.

Pavement performance is affected by its surroundings. In addition to providing preventive maintenance, the civil engineer should consider the following recommendations in the design and layout of pavements:

- Final grade adjacent to parking lots and drives should slope down from pavement edges at a minimum 2%;
- The subgrade and the pavement surface should have a minimum ¼ inch per foot slope to promote proper surface drainage;
- Install pavement drainage surrounding areas anticipated for frequent wetting (e.g., garden centers, wash racks);
- Install joint sealant and seal cracks immediately;
- Seal all landscaped areas in, or adjacent to pavements to reduce moisture migration to subgrade soils;
- Place compacted, low permeability backfill against the exterior side of curb and gutter; and,
- Place curb, gutter and/or sidewalk directly on low permeability subgrade soils rather than on unbound granular base course materials.

Estimates of Minimum Pavement Thickness

As a minimum, we recommend the following **minimum** typical pavement sections be considered.

Asphalt (AC) Pavement			
Material	**Light Duty[1] Thickness (inches)**	**Heavy Duty[2] Thickness (inches)**	**GDOT**
Subgrade	Upper 12 inches of engineered fill	Upper 12 inches of engineered fill	98% of Standard Proctor MMD, -2 to +3% OMC
Geogrid	Tensar NX-650	Tensar NX-750	N/A
Aggregate Base	8	12	GAB, Section 815 and 310
Asphalt Binder Course	-	1¾	SP19 - Section 400, 424, 824 and 828
Asphalt Surface Course	2	1¼	SP9.5 - Section 400, 424, 824 and 828

1. Automobiles only.
2. Combined automobiles and trucks

The graded aggregate base should be compacted to a minimum of 98 percent of the material's modified Proctor (ASTM D-1557, Method C) maximum dry density. Where base

course thickness exceeds 6 inches, the material should be placed and compacted in two or more lifts of equal thickness.

The listed pavement component thicknesses should be used as a guide for pavement systems at the site for the traffic classifications stated herein. These recommendations assume a 20-year pavement design life. If pavement frequencies or loads will be different than that specified Terracon should be contacted and allowed to review these pavement sections.

Construction traffic on the pavements was not considered in developing the recommended minimum pavement thicknesses. If the pavements will be subject to traffic by construction equipment/vehicles, the pavement thicknesses should be revised to consider the effects of the additional traffic loading.

Asphalt concrete aggregates and base course materials should conform to the Georgia Department of Transportation (GDOT) "Standard Specifications for Construction of Transportation System".

Portland Cement Concrete (PCC) Pavement			
Material	**Light Duty[1] Thickness (inches)**	**Heavy Duty[2] Thickness (inches)**	**Reference**
Subgrade	Upper 12 inches of engineered fill	Upper 12 inches of engineered fill	GDOT: 98% of Standard Proctor MMD, -2 to +3% OMC
Geogrid	Tensar NX-650	Tensar NX-750	N/A
Aggregate Base	6	6	GDOT: GAB, Section 815 and 310
PCC	5	6 ½	ACI

1. Automobiles only.
2. Combined automobiles and trucks

We recommend a Portland cement concrete (PCC) pavement be utilized in entrance and exit sections, dumpster pads, loading dock areas, or other areas where extensive wheel maneuvering are expected. The dumpster pad (if applicable) should be large enough to support the wheels of the truck which will bear the load of the dumpster.

Although not required for structural support, the base course layer is recommended to help reduce potentials for slab curl, shrinkage cracking, and subgrade "pumping" through joints. Proper joint spacing will also be required to prevent excessive slab curling and

shrinkage cracking. All joints should be sealed to prevent entry of foreign material and dowelled where necessary for load transfer.

Portland cement concrete should be designed with proper air-entrainment and have a minimum compressive strength of 4,000 psi after 28 days of laboratory curing. Adequate reinforcement and number of longitudinal and transverse control joints should be placed in the rigid pavement in accordance with ACI requirements. The joints should be sealed as soon as possible (in accordance with sealant manufacturer's instructions and ACI requirements) to minimize infiltration of water into the soil.

Pavement Drainage

Pavements should be sloped to provide rapid drainage of surface water. Water allowed to pond on or adjacent to the pavements could saturate the subgrade and contribute to premature pavement deterioration. In addition, the pavement subgrade should be graded to provide positive drainage within the granular base section.

We recommend drainage be included at the bottom of the GAB layer at the storm structures to aid in removing water that may enter this layer. Drainage could consist of small diameter weep holes excavated around the perimeter of the storm structures. The weep holes should be excavated at the elevation of the GAB and soil interface. The excavation should be covered with No. 57 stone which is encompassed in Mirafi 140 NL or approve equivalent which will aid in reducing fines from entering the storm system.

Pavement Maintenance

The pavement sections provided in this report represent the minimum recommended thicknesses and, as such, periodic maintenance should be anticipated. Therefore, preventive maintenance should be planned and provided for through an on-going pavement management program. Preventive maintenance activities are intended to slow the rate of pavement deterioration, and to preserve the pavement investment. Preventive maintenance consists of both localized maintenance (e.g., crack and joint sealing and patching) and global maintenance (e.g., surface sealing). Preventive maintenance is usually the first priority when implementing a planned pavement maintenance program and provides the highest return on investment for pavements. Prior to implementing any maintenance, additional engineering observation is recommended to determine the type and extent of preventive maintenance. Even with periodic maintenance, some movements and related cracking may still occur, and repairs may be required.

General Comments

Our analysis and opinions are based upon our understanding of the project, the geotechnical conditions in the area, and the data obtained from our site exploration.

Variations will occur between exploration point locations or due to the modifying effects of construction or weather. The nature and extent of such variations may not become evident until during or after construction. Terracon should be retained as the Geotechnical Engineer, where noted in this report, to provide observation and testing services during pertinent construction phases. If variations appear, we can provide further evaluation and supplemental recommendations. If variations are noted in the absence of our observation and testing services on-site, we should be immediately notified so that we can provide evaluation and supplemental recommendations.

Our Scope of Services does not include either specifically or by implication any environmental or biological (e.g., mold, fungi, bacteria) assessment of the site or identification or prevention of pollutants, hazardous materials or conditions. If the owner is concerned about the potential for such contamination or pollution, other studies should be undertaken.

Our services and any correspondence are intended for the sole benefit and exclusive use of our client for specific application to the project discussed and are accomplished in accordance with generally accepted geotechnical engineering practices with no third-party beneficiaries intended. Any third-party access to services or correspondence is solely for information purposes to support the services provided by Terracon to our client. Reliance upon the services and any work product is limited to our client and is not intended for third parties. Any use or reliance of the provided information by third parties is done solely at their own risk. No warranties, either express or implied, are intended or made.

Site characteristics as provided are for design purposes and not to estimate excavation cost. Any use of our report in that regard is done at the sole risk of the excavating cost estimator as there may be variations on the site that are not apparent in the data that could significantly affect excavation cost. Any parties charged with estimating excavation costs should seek their own site characterization for specific purposes to obtain the specific level of detail necessary for costing. Site safety and cost estimating including excavation support and dewatering requirements/design are the responsibility of others. Construction and site development have the potential to affect adjacent properties. Such impacts can include damages due to vibration, modification of groundwater/surface water flow during construction, foundation movement due to undermining or subsidence from excavation, as well as noise or air quality concerns. Evaluation of these items on nearby properties are commonly associated with contractor means and methods and are not addressed in this report. The owner and contractor should consider a preconstruction/precondition survey of surrounding development. If changes in the nature, design, or location of the project are planned, our conclusions and recommendations shall not be considered valid unless we review the changes and either verify or modify our conclusions in writing.

Figures

Contents:

GeoModel

514 Hillcrest Indust. Blvd
Macon, GA

GeoModel

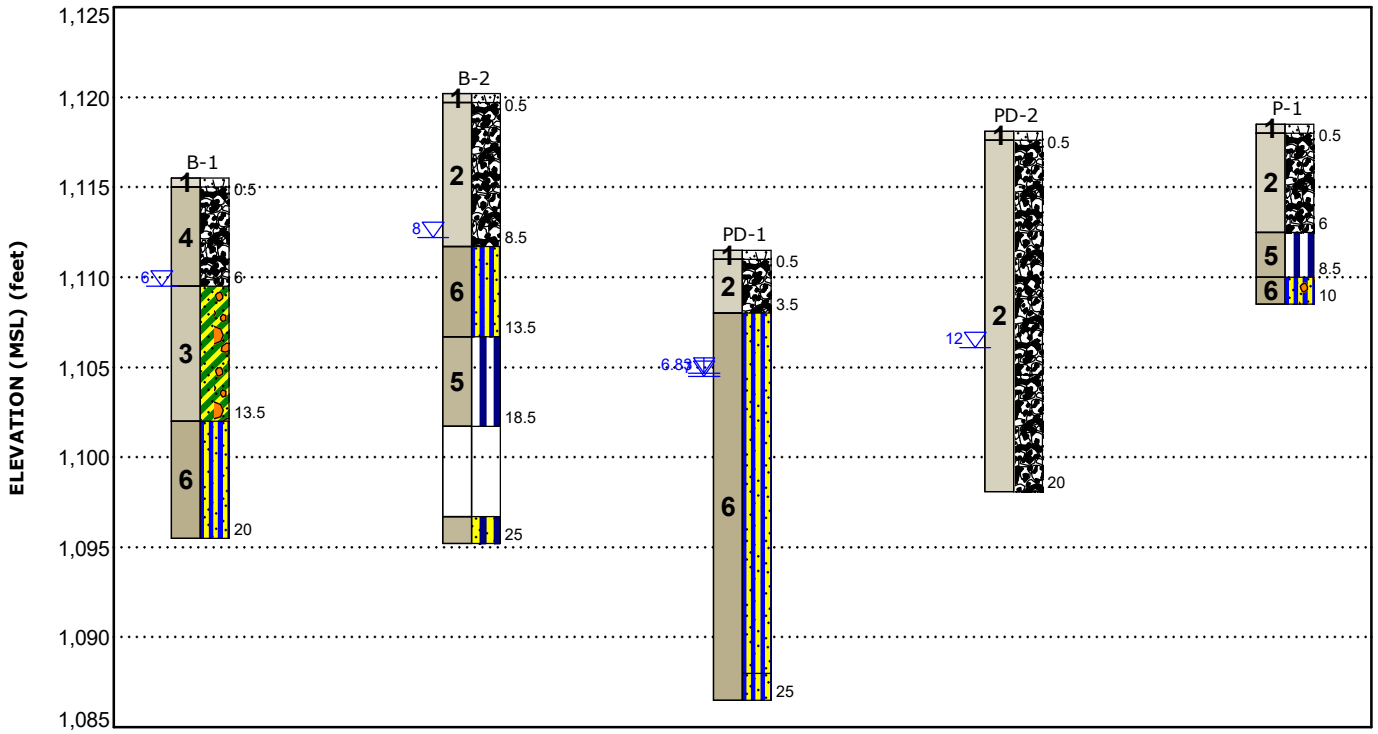

This is not a cross section. This is intended to display the Geotechnical Model only. See individual logs for more detailed conditions.

Model Layer	Layer Name	General Description
1	**Topsoil**	Topsoil
2	**Fill**	Fill - Sandy Fat Clay (CH), Fill - Sandy Silt (ML), Fill - Silty Clayey Sand (SC-SM), Fill - Sandy Lean Clay (CL), Fill - Clayey Sand (SC)
3	**Alluvium**	Alluvium Sandy Fat Clay (CH)
4	**Piedmont Residual Soils**	Sandy Fat Clay (CH)
5	**Piedmont Residual Soils**	Elastic Silt (MH), Sandy Elastic Silt (MH)
6	**Piedmont Residual Soils**	Sandy Silt (ML)

Legend

- Topsoil
- Fill
- Sandy Fat Clay with Gravel
- Sandy Silt
- Elastic Silt
- Sandy Elastic Silt
- Sandy Silt with Gravel

NOTES:
Layering shown on this figure has been developed by the geotechnical engineer for purposes of modeling the subsurface conditions as required for the subsequent geotechnical engineering for this project.

First Water Observation
Second Water Observation

Groundwater levels are temporal. The levels shown are representative of the date and time of our exploration. Significant changes are possible over time.
Water levels shown are as measured during and/or after drilling. In some cases, boring advancement methods mask the presence/absence of groundwater. See individual logs for details.

Attachments

Contents:

Exploration and Testing Procedures
Site Location and Exploration Plans
Exploration Results
Supporting Information

Exploration and Testing Procedures

Field Exploration

Number of Borings	Approximate Boring Depth (feet)	Location
2	20	Building Addition Area
1	10	Pavement
2	20-25	Previously planned detention pond structure

Boring Layout and Elevations: Terracon personnel provided the boring layout using handheld GPS equipment (estimated horizontal accuracy of about ±20 feet) and referencing existing site features. If elevations and a more precise boring layout are desired, we recommend borings be surveyed.

Subsurface Exploration Procedures: We advanced the borings with a truck-mounted, track-mounted, ATV-mounted rotary drill rig using continuous flight augers (solid stem and/or hollow stem, as necessary, depending on soil conditions). Four samples were obtained in the upper 10 feet of each boring and at intervals of 5 feet thereafter. In the split-barrel sampling procedure, a standard 2-inch outer diameter split-barrel sampling spoon was driven into the ground by a 140-pound automatic hammer falling a distance of 30 inches. The number of blows required to advance the sampling spoon the last 12 inches of a normal 18-inch penetration is recorded as the Standard Penetration Test (SPT) resistance value. The SPT resistance values, also referred to as N-values, are indicated on the boring logs at the test depths. We observed and recorded groundwater levels during drilling and sampling. Due to low blow count material at a depth of 20 feet in B-1, the borehole was advanced an additional 10 feet to explore suitable material. For safety purposes, all borings were backfilled with auger cuttings after their completion.

We also observed the boreholes while drilling and at the completion of drilling for the presence of groundwater. The groundwater levels are shown on the attached boring logs.

The sampling depths, penetration distances, and other sampling information was recorded on the field boring logs. The samples were placed in appropriate containers and taken to our soil laboratory for classification by a Geotechnical Engineer. Our exploration team prepared field boring logs as part of the drilling operations. These field logs included visual classifications of the materials observed during drilling and our interpretation of the subsurface conditions between samples. Final boring logs were prepared from the field logs. The final boring logs represent the Geotechnical Engineer's interpretation of the field logs and include modifications based on observations and field data.

Site Location and Exploration Plans

Contents:

Site Location Plan
Exploration Plan

Note: All attachments are one page unless noted above.

Site Location

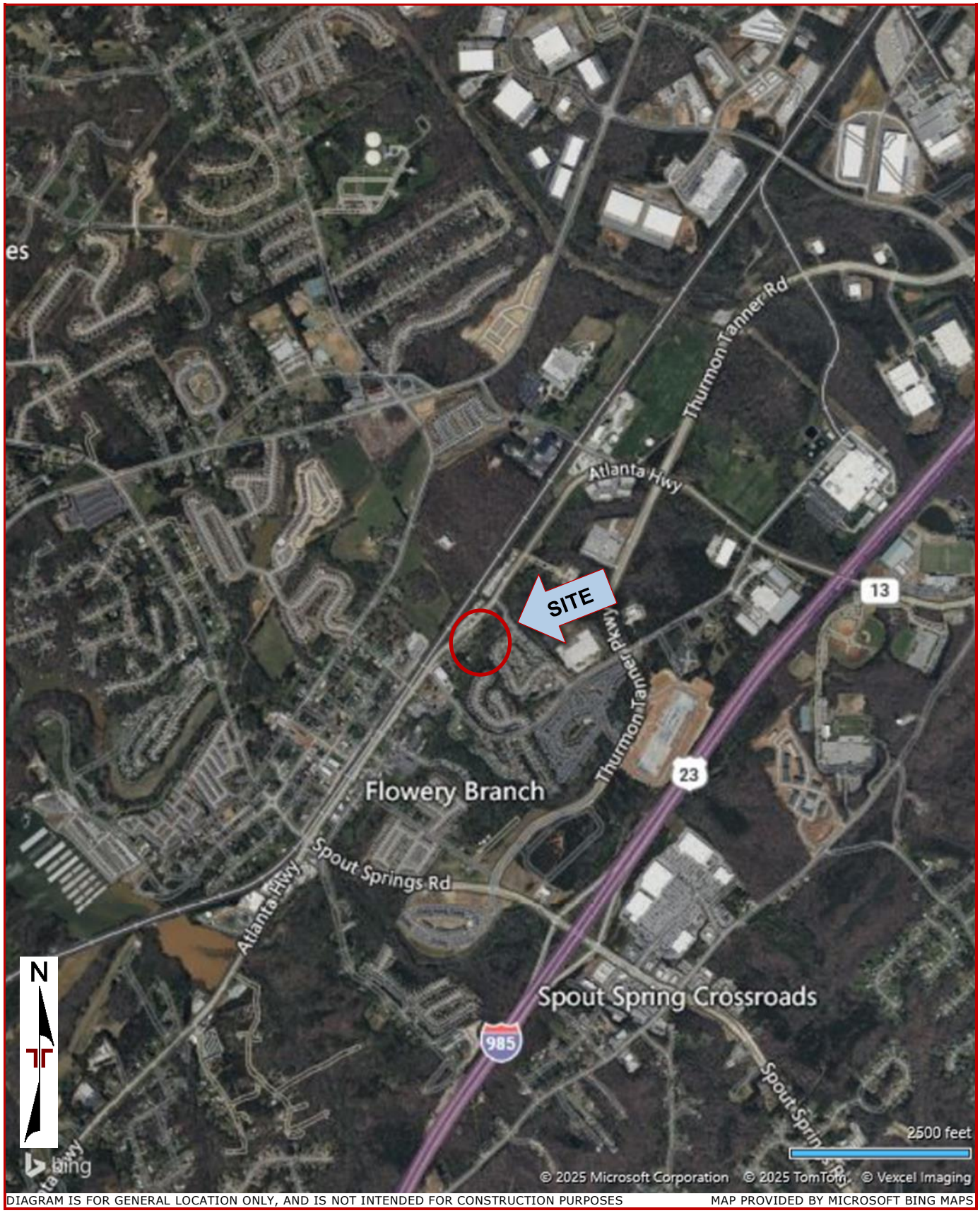

DIAGRAM IS FOR GENERAL LOCATION ONLY, AND IS NOT INTENDED FOR CONSTRUCTION PURPOSES MAP PROVIDED BY MICROSOFT BING MAPS

Exploration Plan

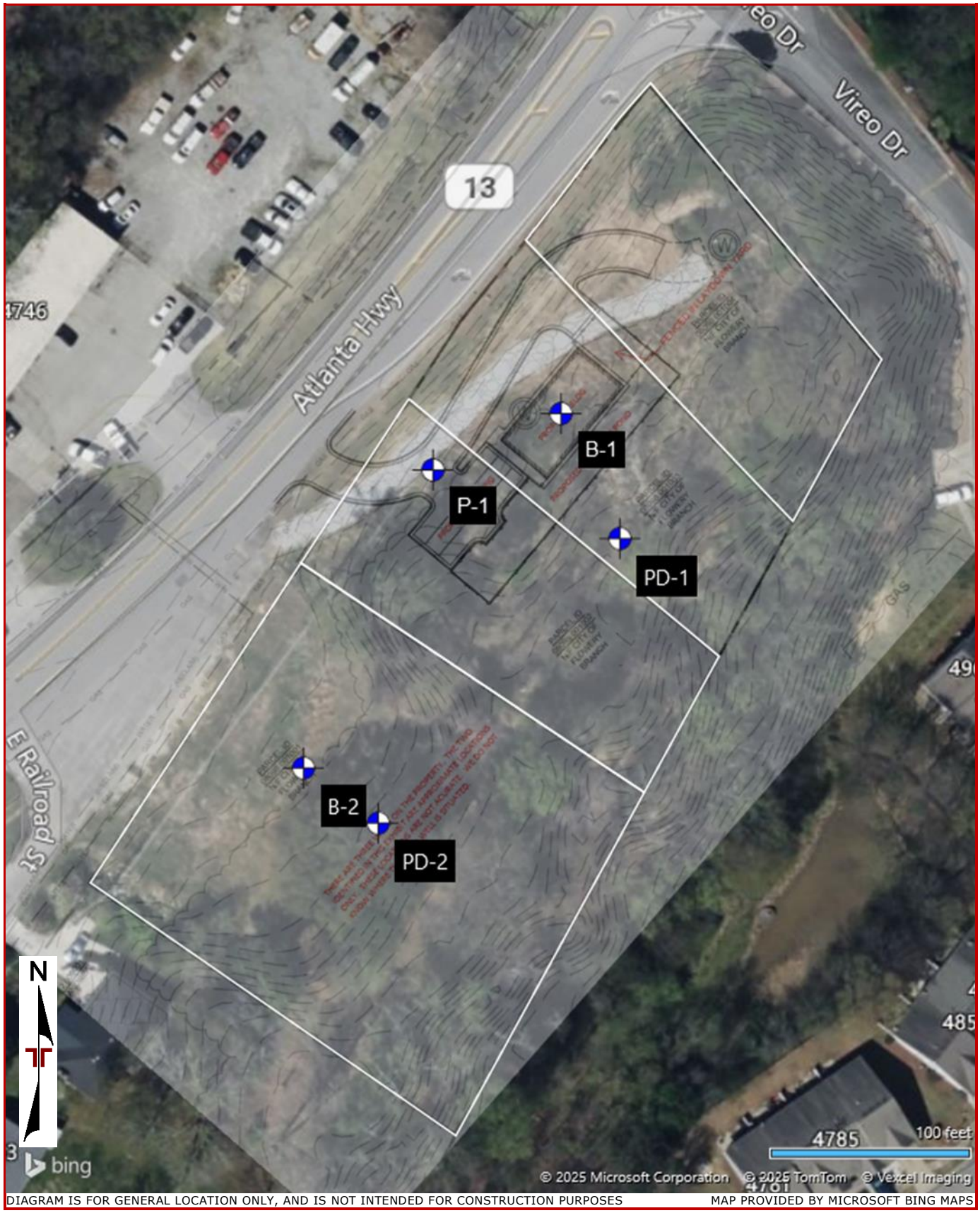

DIAGRAM IS FOR GENERAL LOCATION ONLY, AND IS NOT INTENDED FOR CONSTRUCTION PURPOSES MAP PROVIDED BY MICROSOFT BING MAPS

Exploration Results

Contents:

Boring Logs (B-1, B-2, P-1, PD-1 and PD-2)
Atterberg Limits
Grain Size Analysis

Note: All attachments are one page unless noted above.

Terracon
514 Hillcrest Indust. Blvd
Macon, GA

Boring Log No. B-1

Location: See Exploration Plan

Latitude: 34.1909° Longitude: -83.9183°

Model Layer	Graphic Log	Depth (Ft.)	Elevation: 1115.5 (Ft.)	Depth (Ft.)	Water Level Observations	Sample Type	Field Test Results	Water Content (%)	Atterberg Limits LL-PL-PI
1		0.5	**TOPSOIL**, 4.25" 1115						
4		6.0	**FILL - SANDY FAT CLAY (CH)**, trace organics, fine to medium grained, brown, soft, with rock fragments 1109.5				2-2-2 N=4		
							1-2-2 N=4		
3		13.5	**SANDY FAT CLAY WITH GRAVEL (CH)**, trace organics, fine to medium grained, light gray, very soft to soft, Alluvium 1102	5			1-2-2 N=4		
							WOH-1-1 N=2		
6		20.0	**SANDY SILT (ML)**, with mica, fine to medium grained, tan, medium stiff to stiff, Residuum, with rock fragments 1095.5	10			1-3-4 N=7		
				15			2-5-5 N=10		
			Boring Terminated at 20 Feet	20					

See Exploration and Testing Procedures for a description of field and laboratory procedures used and additional data (If any).

See Supporting Information for explanation of symbols and abbreviations.

Elevation Reference: Elevations obtained from ESG drawing, Flowery Branch Site, Sheet 1, dated March 6, 2025.

Water Level Observations
While drilling

Cave in

Drill Rig
1306

Hammer Type
Automatic

Driller
A. Downs

Logged by
C. Shubert

Boring Started
02-27-2025

Boring Completed
02-27-2025

Notes

Advancement Method
3.25" HSA

Abandonment Method
Boring backfilled with auger cuttings upon completion.

Terracon
514 Hillcrest Indust. Blvd
Macon, GA

Boring Log No. B-2

Location: See Exploration Plan

Latitude: 34.1904° Longitude: -83.9187°

Model Layer	Graphic Log	Depth (Ft.)	Elevation: 1120.2 (Ft.)	Depth (Ft.)	Water Level Observations	Sample Type	Field Test Results	Water Content (%)	Atterberg Limits LL-PL-PI
1		0.5	**TOPSOIL**, 3" 1119.7						
2			**FILL - SILTY SAND (SM)**, trace mica, fine to coarse grained, brown, very loose, with rock fragments, trace organics				1-2-1 N=3		
							1-1-1 N=2	25.3	43-33-10
			moist	5			2-1-2 N=3		
		8.5	1111.7						
6			**SANDY SILT (ML)**, trace mica, fine to medium grained, tan and light gray, stiff, Residuum				2-4-10 N=14		
		13.5	1106.7	10					
5			**ELASTIC SILT (MH)**, trace organics, tan and light gray, stiff				1-4-5 N=9		
		18.5	1101.7	15					
			No Recovery				2-2-2 N=4		
		23.5	1096.7	20					
			SANDY ELASTIC SILT (MH), fine to medium grained, tan, moist, medium stiff, with rock fragments				2-4-3 N=7		
		25.0	1095.2	25					
			Boring Terminated at 25 Feet						

See Exploration and Testing Procedures for a description of field and laboratory procedures used and additional data (If any).

See Supporting Information for explanation of symbols and abbreviations.

Elevation Reference: Elevations obtained from ESG drawing, Flowery Branch Site, Sheet 1, dated March 6, 2025.

Water Level Observations
While drilling

Cave in

Drill Rig
1306

Hammer Type
Automatic

Driller
A. Downs

Logged by
C. Shubert

Boring Started
02-27-2025

Boring Completed
02-27-2025

Notes

Advancement Method
3.25" HSA

Abandonment Method
Boring backfilled with auger cuttings upon completion.

Terracon
514 Hillcrest Indust. Blvd
Macon, GA

Boring Log No. PD-1

Location: See Exploration Plan

Latitude: 34.1907° Longitude: -83.9182°

Model Layer	Graphic Log	Depth (Ft.)	Elevation: 1111.5 (Ft.)	Depth (Ft.)	Water Level Observations	Sample Type	Field Test Results	Water Content (%)	Atterberg Limits LL-PL-PI
1		0.5	**TOPSOIL**, 4"						
2			**FILL - SILTY CLAYEY SAND WITH GRAVEL (SC-SM)**, fine to coarse grained, tan and gray, loose				2-4-4 N=8		
		3.5							
6			**SANDY SILT (ML)**, trace mica, fine to medium grained, light orange and gray, very soft to soft, Residuum				1-1-1 N=2		
			tan	5			1-1-1 N=2		
							1-1-2 N=3		
				10					
			tan and light gray				1-1-1 N=2		
				15					
			medium stiff				1-2-3 N=5		
				20					
		23.5							
			SANDY SILT (ML), fine to medium grained, tan, stiff				2-5-5 N=10		
		25.0		25					
			Boring Terminated at 25 Feet						

1111 / 1108 / 1088 / 1086.5

See Exploration and Testing Procedures for a description of field and laboratory procedures used and additional data (If any).

See Supporting Information for explanation of symbols and abbreviations.

Elevation Reference: Elevations obtained from ESG drawing, Flowery Branch Site, Sheet 1, dated March 6, 2025.

Water Level Observations
While drilling
At completion of drilling

Drill Rig
1306

Hammer Type
Automatic

Driller
A. Downs

Logged by
C. Shubert

Boring Started
02-27-2025

Boring Completed
02-27-2025

Notes

Advancement Method
3.25" HSA

Abandonment Method
Boring backfilled with auger cuttings upon completion.

Terracon
514 Hillcrest Indust. Blvd
Macon, GA

Boring Log No. PD-2

Location: See Exploration Plan

Latitude: 34.1903° Longitude: -83.9186°

Depth (Ft.) Elevation: 1118.1 (Ft.)

Model Layer	Graphic Log	Depth (Ft.)	Water Level Observations	Sample Type	Field Test Results	Water Content (%)	Atterberg Limits LL-PL-PI
1		0.5 **TOPSOIL**, 4" 1117.6					
2		**FILL - SANDY LEAN CLAY (CL)**, trace organics, fine to coarse grained, brown, soft to medium stiff, with rock fragments			2-2-3 N=5	22.0	41-24-17
					2-1-2 N=3		
		with excessive wooden debris			2-2-2 N=4		
					2-2-2 N=4		
		13.5 1104.6 **FILL - SANDY FAT CLAY (CH)**, trace organics, fine to medium grained, tan and dark gray, stiff to very stiff, Debris elevated blow counts			8-10-12 N=22		
		20.0 1098.1 ***Boring Terminated at 20 Feet***			5-6-8 N=14		

See Exploration and Testing Procedures for a description of field and laboratory procedures used and additional data (If any).

See Supporting Information for explanation of symbols and abbreviations.

Elevation Reference: Elevations obtained from ESG drawing, Flowery Branch Site, Sheet 1, dated March 6, 2025.

Water Level Observations
While drilling

Cave in

Drill Rig
1306

Hammer Type
Automatic

Driller
A. Downs

Logged by
C. Shubert

Boring Started
02-27-2025

Boring Completed
02-27-2025

Notes

Advancement Method
3.25" HSA

Abandonment Method
Boring backfilled with auger cuttings upon completion.

Terracon
514 Hillcrest Indust. Blvd
Macon, GA

Boring Log No. P-1

Location: See Exploration Plan

Latitude: 34.1908° Longitude: -83.9185°

Model Layer	Graphic Log	Depth (Ft.)	Elevation: 1118.5 (Ft.)	Depth (Ft.)	Water Level Observations	Sample Type	Field Test Results	Water Content (%)	Atterberg Limits LL-PL-PI
1		0.5	**TOPSOIL**, 4" 1118						
2			**FILL - CLAYEY SAND (SC)**, trace organics, fine to medium grained, gray, medium stiff to stiff				2-3-4 N=7	16.5	28-17-11
			light gray, with rock fragments				2-4-9 N=13		
		6.0	1112.5	5					
5			**ELASTIC SILT (MH)**, trace mica, fine to medium grained, tan, soft, Residuum				1-1-2 N=3		
		8.5	1110						
6			**SANDY SILT WITH GRAVEL (ML)**, trace mica, fine to coarse grained, brown, stiff				2-5-5 N=10		
		10.0	1108.5	10					
			Boring Terminated at 10 Feet						

See Exploration and Testing Procedures for a description of field and laboratory procedures used and additional data (If any).

See Supporting Information for explanation of symbols and abbreviations.

Elevation Reference: Elevations obtained from ESG drawing, Flowery Branch Site, Sheet 1, dated March 6, 2025.

Water Level Observations
Not encountered

Drill Rig
1306

Hammer Type
Automatic

Driller
A. Downs

Notes

Advancement Method
3.25" HSA

Abandonment Method
Boring backfilled with auger cuttings upon completion.

Logged by
C. Shubert

Boring Started
02-27-2025

Boring Completed
02-27-2025

ATTERBERG LIMITS RESULTS

ASTM D4318

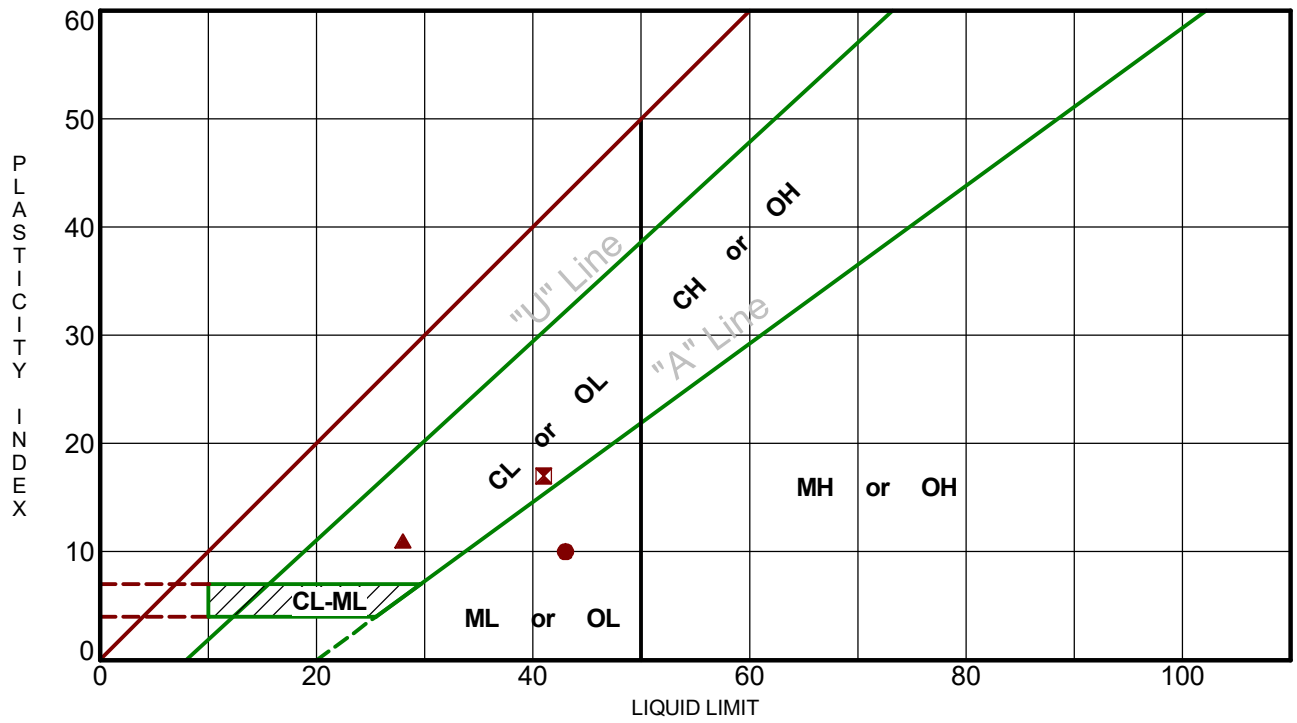

Boring ID		Depth (Ft)	LL	PL	PI	Fines	USCS	Description
●	B-2	3.5 - 5	43	33	10	49.0	SM	Brown SILTY C-F SAND
⊠	PD-2	1 - 2.5	41	24	17	52.8	CL	Brown C-F SANDY LEAN CLAY
▲	P-1	1 - 2.5	28	17	11	46.3	SC	Grey CLAYEY M-F SAND

PROJECT: Drinking Water Site

PROJECT NUMBER: HN255025

SITE: Atlanta Hwy
Flowery Branch, GA

Terracon
514 Hillcrest Indust. Blvd
Macon, GA

CLIENT: ESG Engineering, Inc
Macon, GA

LABORATORY TESTS ARE NOT VALID IF SEPARATED FROM ORIGINAL REPORT. ATTERBERG LIMITS HN255025 DRINKING WATER SI.GPJ TERRACON_DATATEMPLATE.GDT 4/3/25

Terracon
514 Hillcrest Indust. Blvd
Macon, GA

Grain Size Distribution

ASTM D422 / ASTM C136 / AASHTO T27

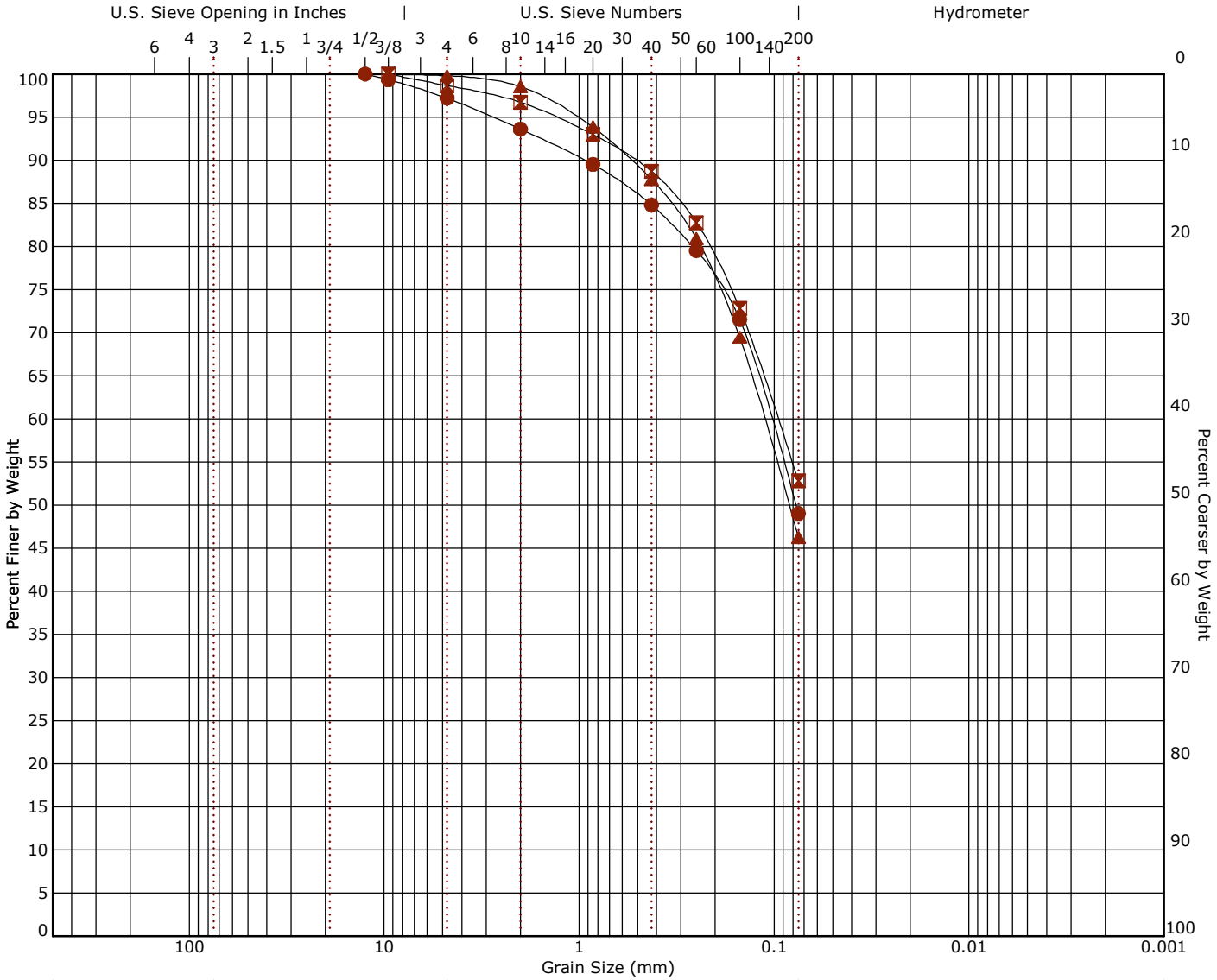

Cobbles	Gravel		Sand			Silt or Clay
	coarse	fine	coarse	medium	fine	

	Boring ID	Depth	% Cobbles	% Gravel	% Sand	% Fines	% Silt	% Clay	USCS
●	B-2	3.5 - 5	0.0	2.8	48.2	49.0			SM
⊠	PD-2	1 - 2.5	0.0	1.3	45.9	52.8			CL
▲	P-1	1 - 2.5	0.0	0.2	53.6	46.3			SC

	Description
●	Brown SILTY C-F SAND
⊠	Brown C-F SANDY LEAN CLAY
▲	Grey CLAYEY M-F SAND

	Remarks
●	
⊠	
▲	

●		⊠		▲	
Sieve	% Finer	Sieve	% Finer	Sieve	% Finer
1/2"	100.0	3/8"	100.0	3/8"	100.0
3/8"	99.33	#4	98.67	#4	99.81
#4	97.2	#10	96.74	#10	98.54
#10	93.62	#20	93.0	#20	93.86
#20	89.53	#40	88.73	#40	87.79
#40	84.81	#60	82.78	#60	80.92
#60	79.52	#100	72.84	#100	69.48
#100	71.55	#200	52.8	#200	46.26
#200	49.02				

Grain Size	●	⊠	▲
D_{60}	0.105	0.096	0.113
D_{10}			

Coefficients	●	⊠	▲
C_c			
C_u			

Supporting Information

Contents:

General Notes
Unified Soil Classification System

Note: All attachments are one page unless noted above.

514 Hillcrest Indust. Blvd
Macon, GA

General Notes

Sampling	Water Level	Field Tests
Split Spoon	Water Initially Encountered Water Level After a Specified Period of Time Water Level After a Specified Period of Time Cave In Encountered Water levels indicated on the soil boring logs are the levels measured in the borehole at the times indicated. Groundwater level variations will occur over time. In low permeability soils, accurate determination of groundwater levels is not possible with short term water level observations.	N Standard Penetration Test Resistance (Blows/Ft.) (HP) Hand Penetrometer (T) Torvane (DCP) Dynamic Cone Penetrometer UC Unconfined Compressive Strength (PID) Photo-Ionization Detector (OVA) Organic Vapor Analyzer

Descriptive Soil Classification

Soil classification as noted on the soil boring logs is based Unified Soil Classification System. Where sufficient laboratory data exist to classify the soils consistent with ASTM D2487 "Classification of Soils for Engineering Purposes" this procedure is used. ASTM D2488 "Description and Identification of Soils (Visual-Manual Procedure)" is also used to classify the soils, particularly where insufficient laboratory data exist to classify the soils in accordance with ASTM D2487. In addition to USCS classification, coarse grained soils are classified on the basis of their in-place relative density, and fine-grained soils are classified on the basis of their consistency. See "Strength Terms" table below for details. The ASTM standards noted above are for reference to methodology in general. In some cases, variations to methods are applied as a result of local practice or professional judgment.

Location And Elevation Notes

Exploration point locations as shown on the Exploration Plan and as noted on the soil boring logs in the form of Latitude and Longitude are approximate. See Exploration and Testing Procedures in the report for the methods used to locate the exploration points for this project. Surface elevation data annotated with +/- indicates that no actual topographical survey was conducted to confirm the surface elevation. Instead, the surface elevation was approximately determined from topographic maps of the area.

Strength Terms

Relative Density of Coarse-Grained Soils (More than 50% retained on No. 200 sieve.) Density determined by Standard Penetration Resistance		Consistency of Fine-Grained Soils (50% or more passing the No. 200 sieve.) Consistency determined by laboratory shear strength testing, field visual-manual procedures or standard penetration resistance		
Relative Density	**Standard Penetration or N-Value (Blows/Ft.)**	**Consistency**	**Unconfined Compressive Strength Qu (tsf)**	**Standard Penetration or N-Value (Blows/Ft.)**
Very Loose	0 - 3	Very Soft	less than 0.25	0 - 1
Loose	4 - 9	Soft	0.25 to 0.50	2 - 4
Medium Dense	10 - 29	Medium Stiff	0.50 to 1.00	4 - 8
Dense	30 - 50	Stiff	1.00 to 2.00	8 - 15
Very Dense	> 50	Very Stiff	2.00 to 4.00	15 - 30
		Hard	> 4.00	> 30

Relevance of Exploration and Laboratory Test Results

Exploration/field results and/or laboratory test data contained within this document are intended for application to the project as described in this document. Use of such exploration/field results and/or laboratory test data should not be used independently of this document.

Unified Soil Classification System

Criteria for Assigning Group Symbols and Group Names Using Laboratory Tests [A]				Soil Classification	
				Group Symbol	Group Name [B]
Coarse-Grained Soils: More than 50% retained on No. 4 sieve	**Gravels:** More than 50% of coarse fraction retained on No. 4 sieve	**Clean Gravels:** Less than 5% fines [C]	Cu≥4 and 1≤Cc≤3 [E]	GW	Well-graded gravel [F]
			Cu<4 and/or [Cc<1 or Cc>3.0] [E]	GP	Poorly graded gravel [F]
		Gravels with Fines: More than 12% fines [C]	Fines classify as ML or MH	GM	Silty gravel [F, G, H]
			Fines classify as CL or CH	GC	Clayey gravel [F, G, H]
	Sands: 50% or more of coarse fraction passes No. 4 sieve	**Clean Sands:** Less than 5% fines [D]	Cu≥6 and 1≤Cc≤3 [E]	SW	Well-graded sand [I]
			Cu<6 and/or [Cc<1 or Cc>3.0] [E]	SP	Poorly graded sand [I]
		Sands with Fines: More than 12% fines [D]	Fines classify as ML or MH	SM	Silty sand [G, H, I]
			Fines classify as CL or CH	SC	Clayey sand [G, H, I]
Fine-Grained Soils: 50% or more passes the No. 200 sieve	**Silts and Clays:** Liquid limit less than 50	**Inorganic:**	PI > 7 and plots above "A" line [J]	CL	Lean clay [K, L, M]
			PI < 4 or plots below "A" line [J]	ML	Silt [K, L, M]
		Organic:	$\frac{LL\ oven\ dried}{LL\ not\ dried} < 0.75$	OL	Organic clay [K, L, M, N]
					Organic silt [K, L, M, O]
	Silts and Clays: Liquid limit 50 or more	**Inorganic:**	PI plots on or above "A" line	CH	Fat clay [K, L, M]
			PI plots below "A" line	MH	Elastic silt [K, L, M]
		Organic:	$\frac{LL\ oven\ dried}{LL\ not\ dried} < 0.75$	OH	Organic clay [K, L, M, P]
					Organic silt [K, L, M, Q]
Highly organic soils:	Primarily organic matter, dark in color, and organic odor			PT	Peat

[A] Based on the material passing the 3-inch (75-mm) sieve.
[B] If field sample contained cobbles or boulders, or both, add "with cobbles or boulders, or both" to group name.
[C] Gravels with 5 to 12% fines require dual symbols: GW-GM well-graded gravel with silt, GW-GC well-graded gravel with clay, GP-GM poorly graded gravel with silt, GP-GC poorly graded gravel with clay.
[D] Sands with 5 to 12% fines require dual symbols: SW-SM well-graded sand with silt, SW-SC well-graded sand with clay, SP-SM poorly graded sand with silt, SP-SC poorly graded sand with clay.
[E] $Cu = D_{60}/D_{10}$ $Cc = \frac{(D_{30})^2}{D_{10} \times D_{60}}$
[F] If soil contains ≥ 15% sand, add "with sand" to group name.
[G] If fines classify as CL-ML, use dual symbol GC-GM, or SC-SM.
[H] If fines are organic, add "with organic fines" to group name.
[I] If soil contains ≥ 15% gravel, add "with gravel" to group name.
[J] If Atterberg limits plot in shaded area, soil is a CL-ML, silty clay.
[K] If soil contains 15 to 29% plus No. 200, add "with sand" or "with gravel," whichever is predominant.
[L] If soil contains ≥ 30% plus No. 200 predominantly sand, add "sandy" to group name.
[M] If soil contains ≥ 30% plus No. 200, predominantly gravel, add "gravelly" to group name.
[N] PI ≥ 4 and plots on or above "A" line.
[O] PI < 4 or plots below "A" line.
[P] PI plots on or above "A" line.
[Q] PI plots below "A" line.

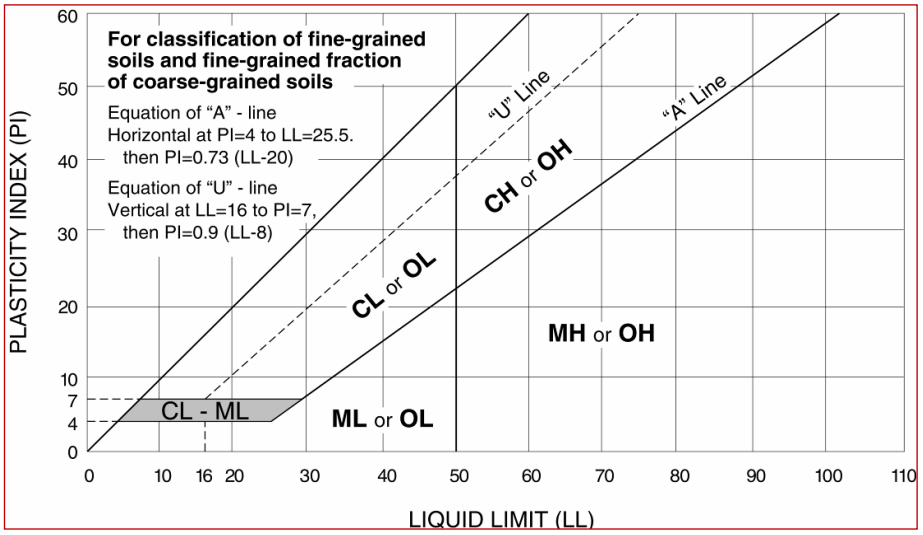

GROUNDWATER WELLS #4 & #5

FOR THE

CITY OF FLOWERY BRANCH

HALL COUNTY, GA

DECEMBER 2025

F0002.018

CITY COUNCIL

OLIVER McCLELLAN	MAYOR
CHRIS MUNDY	POST 1 COUNCIL MEMBER
JOSEPH MEZZANOTTE	POST 2 COUNCIL MEMBER
WILLIAM McDANIEL	POST 3 COUNCIL MEMBER
CHARLES VANDERBILT	POST 4 COUNCIL MEMBER
PETER LENA	POST 5 COUNCIL MEMBER
TONYA PARRISH	CITY MANAGER

PROJECT CONTACTS:

1. OWNER / DEVELOPER:
   CITY OF FLOWERY BRANCH
   5410 PINE STREET
   FLOWERY BRANCH, GEORGIA 30542
   PHONE: 770-967-6371

2. PROJECT MANAGER:
   ANDREW SWICEGOOD, PE
   ESG ENGINEERING, LLC
   6400 PEAKE ROAD
   MACON, GEORGIA 31210
   PHONE: 478-718-4426
   ANDREW.SWICEGOOD@ESGENGINEERING.COM

3. 24-HOUR EROSION, SEDIMENTATION, & POLLUTION CONTROL CONTACT:
   TREY CRISP
   478-335-4612

I CERTIFY THAT THE PERMITTEE'S EROSION, SEDIMENTATION AND POLLUTION CONTROL PLAN PROVIDES FOR AN APPROPRIATE AND COMPREHENSIVE SYSTEM OF BEST MANAGEMENT PRACTICES REQUIRED BY THE GEORGIA WATER QUALITY CONTROL ACT AND THE DOCUMENT "MANUAL FOR EROSION AND SEDIMENT CONTROL IN GEORGIA" (MANUAL) PUBLISHED BY THE GEORGIA SOIL AND WATER CONSERVATION COMMISSION AS OF JANUARY 1 OF THE YEAR IN WHICH THE LAND-DISTURBING ACTIVITY WAS PERMITTED, PROVIDES FOR THE SAMPLING OF THE RECEIVING WATER(S) OR THE SAMPLING OF THE STORMWATER OUTFALLS AND THAT THE DESIGNED SYSTEM OF BEST MANAGEMENT PRACTICES AND SAMPLING METHODS IS EXPECTED TO MEET THE REQUIREMENTS CONTAINED IN THE GENERAL NPDES PERMIT NO. GAR100001.

I CERTIFY UNDER PENALTY OF LAW THAT THIS PLAN WAS PREPARED AFTER A SITE VISIT TO THE LOCATIONS DESCRIBED HEREIN BY MYSELF OR MY AUTHORIZED AGENT, UNDER MY SUPERVISION.

DELMAS S CRISP	0000100336	OCTOBER 3, 2025
LEVEL II DESIGN PERSONNEL	LEVEL II CERTIFICATION NO.	DATE

CONSTRUCTION EXIT
LATITUDE - 34° 11' 25.36" N
LONGITUDE - 83° 55' 8.45" W

GSWCC GEORGIA SOIL AND WATER CONSERVATION COMMISSION

Delmas S Crisp III
LEVEL II CERTIFIED DESIGN PROFESSIONAL

CERTIFICATION NUMBER: 0000100336
ISSUED: 11/08/2023 EXPIRED: 11/08/2028



PROJECT LOCATION

INDEX TO DRAWINGS

Sheet List Table	
SHEET NUMBER	SHEET TITLE
C0.0	COVER SHEET
C0.1	GENERAL NOTES
C1.0	EXISTING CONDITIONS & DEMOLTION PLAN
C2.0	SITE PLAN
C2.1	BUILDING PIPING PLAN
C2.2	BUILDING DETAIL PLAN
C3.0	GRADING & DRAINAGE PLAN
C4.0	UTILITY PLAN
C4.1	WATER MAIN EXTENSION PLAN
C5.0 - C5.2	BUILDING ELEVATIONS
C5.3	SANITARY SEWER PROFILES
C6.0	HYDROLOGY PLAN
C7.0 - C7.2	EROSION, SEDIMENTATION, & POLLUTION CONTROL DETAILS
C8.0 - C8.2	EROSION, SEDIMENTATION, & POLLUTION CONTROL PLAN (WELL SITE IMPROVEMENTS)
C8.3 - C8.5	EROSION, SEDIMENTATION, & POLLUTION CONTROL PLAN (WATER MAIN EXTENSION)
C9.0 - C9.5	CONSTRUCTION DETAILS
L1.0	LANDSCAPING PLAN
S1 - S2	STRUCTURAL PLAN
M0.1 - M0.2, M1.0	MECHANICAL PLAN SHEETS
E1.0 - E6.1	ELECTRICAL PLAN SHEETS
P0.1 & P1.0	PLUMBING PLAN SHEETS

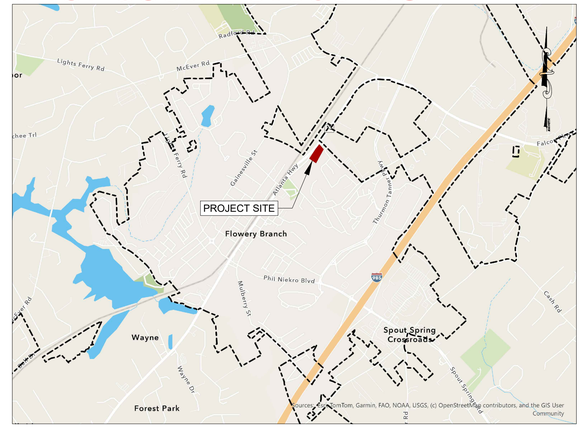

PROJECT VICINITY MAP
N.T.S.

ESG ENGINEERING
6400 Peake Rd
Macon, GA 31210
Ph: (478) 474-4996
Fax: (478) 474-5045

GROUNDWATER WELLS #4 & #5
FOR THE
CITY OF FLOWERY BRANCH

REVISIONS

NO.	DESCRIPTION	DATE
1.	ESPC SHEETS	11-7-25
2.	BID SET OF PLANS	12-1-25
3.	REVISED WITH CITY COMMENTS	12-5-25
4.	ADDENDUM #1	12-8-25
5.	ADDENDUM #2	12-11-25
6.	ADDENDUM #3	12-12-25
7.	REVISED WITH CITY COMMENTS	12-17-25

CONFORMED SET

GEORGIA REGISTERED No. PE046341 PROFESSIONAL ENGINEER ANDREW D SWICEGOOD

DRAWN BY: DSC
CHECKED BY: ADS
DATE: DEC 2025
SCALE: N.T.S.

CONTENT:
COVER SHEET

SHEET NO: C0.0

UTILITY PROVIDERS	
POWER	CITY OF FLOWERY BRANCH - 770-967-6371
	GEORGIA POWER - 888-660-5890
NATURAL GAS	ATLANTA GAS LIGHT - 800-427-5463
	GAS SOUTH - 877-472-4932
	GEORGIA NATURAL GAS - 800-427-5463
	SCANA ENERGY - 877-467-2262
WATER SERVICE & SANITARY SEWER	CITY OF FLOWERY BRANCH - PETER WOERNER - 706-982-0751
	GAINESVILLE WATER - 770-535-6878
TELECOMMUNICATIONS	EARTHLINK FIBER - 833-906-6020
	AT&T - 877-516-2469
	CHARTER (SPECTRUM) - 770-628-5918
	CENTURY LINK (LUMEN) - 877-453-8353
	COMCAST (XFINITY) - 770-628-5960

PROPOSED LINE LEGEND	PROPOSED SYMBOL LEGEND
PROPERTY LINE	LIGHT POLE / POWER POLE (LP) (PP)
RIGHT-OF-WAY	GAS METER / WATER METER (GM) (WM)
SETBACK / BUFFER	GAS VALVE / WATER VALVE (GV) (WV)
EASEMENT	SANITARY/STORM CLEANOUT (SS CO) (ST CO)
LIMITS OF DISTURBANCE	SANITARY/STORM MANHOLE (SS) (ST)
SURFACE MAJOR CONTOUR	BACK FLOW PREVENTION (RPZ) (DDCV)
SURFACE MINOR CONTOUR	FIRE DEPARTMENT CONNECTION / POST INDICATOR VALVE (FDC) (PIV)
SWALE / DITCH	FIRE HYDRANT / HOSE BIB (HYD) (HB)
SILT FENCE	WELL HEAD (W)
OVERHEAD ELECTRIC	STORM GRATE/COMBO INLET (2'x2') (2'x3')
UNDERGROUND POWER	STORM CURB INLET
NATURAL GAS	FLARED/SAFETY END SECTION
SAN. FORCE MAIN	STRAIGHT/WINGED HEADWALL
SANITARY LATERAL	OUTLET CONTROL STRUCTURE
SAN. SEWER GRAVITY MAIN	
TELECOMMUNICATIONS	
WATER SERVICE	
WATER MAIN	
STORM SEWER	

SITE INFORMATION	
OWNER / DEVELOPER	CITY OF FLOWERY BRANCH 5410 PINE STREET FLOWERY BRANCH, GA, 30542 770-967-6371 EXT. 106 tonya@flowerybranchga.com
PROJECT ADDRESS	4745 ATLANTA HWY FLOWERY BRANCH, GA, 30542
TAX MAP & PARCEL NUMBER	08098 001001 THRU 08098 001004
ZONING / LAND USE	H-B
PROJECT AREA	2.14 ACRES
DISTURBED AREA	0.86 ACRES
BUILDING AREA	400 SQUARE FEET
IMPERVIOUS AREA	0.032 ACRES
PROPOSED USE	GROUNDWATER WELL RESTORATION

2

SITE INFORMATION	
PROJECT ADDRESS	4745 ATLANTA HWY
PARCEL NUMBER	08098 001001 THRU 08098 001004
PARCEL ZONING	H-B
PROJECT AREA	2.14 ACRES
BUILDING SETBACK	
FRONT	NONE
REAR	30'
SIDE	10'
LANDSCAPING BUFFER	
FRONT	10'
REAR	30'
SIDE	NONE

GENERAL NOTES

1. CONTRACTOR SHALL ADHERE TO ALL LOCAL, STATE, AND FEDERAL REGULATIONS.
2. CONTRACTOR SHALL COORDINATE ALL CONSTRUCTION WITH THE OWNER.
3. THE CONTRACTOR SHALL PROVIDE 72 HOUR NOTICE TO THE UTILITIES PROTECTION CENTER PRIOR TO CONSTRUCTION COMMENCEMENT OR EXCAVATION.
4. THE CONTRACTOR IS SPECIFICALLY CAUTIONED THAT THE LOCATIONS AND/OR ELEVATIONS OF EXISTING INFRASTRUCTURE AS SHOWN ON THESE PLANS ARE BASED ON EXISTING RECORDS AND WHERE POSSIBLE, MEASUREMENTS TAKEN IN THE FIELD. THIS INFORMATION IS NOT TO BE RELIED ON AS BEING EXACT OR COMPLETE. IT SHALL BE THE RESPONSIBILITY OF THE CONTRACTOR TO EVALUATE ALL EXISTING INFRASTRUCTURE WHICH MAY CONFLICT WITH THE PROPOSED IMPROVEMENTS SHOWN ON THE PLANS AND COORDINATE WITH THE ENGINEER FOR ADJUSTMENT OF THE WORK AS NECESSARY TO MAINTAIN ADEQUATE SEPARATION SHOULD A CONFLICT ARISE. CONTRACTOR SHALL FIELD-VERIFY (BY POT HOLING) ALL EXISTING UTILITIES PRIOR TO AND DURING CONSTRUCTION.
5. ALL IN-PLACE ITEMS WILL BE PROTECTED BY THE CONTRACTOR DURING CONSTRUCTION. ANY DAMAGES WILL BE REPAIRED TO THE RESPECTIVE OWNER'S SATISFACTION BY THE CONTRACTOR AT HIS/HER EXPENSE. CONTRACTOR SHALL MATCH EXISTING GRASS WHEN REPAIRING DISTURBED AREAS.
6. CONTRACTOR SHALL PROTECT ALL EXISTING UTILITIES. CONTRACTOR SHALL, AT HIS OWN EXPENSE, REPAIR OR REPLACE ANY DAMAGED UTILITIES TO THE RESPECTIVE OWNER'S SATISFACTION.
7. THE CONTRACTOR SHALL BE RESPONSIBLE FOR THE DESIGN, PERMITTING, AND IMPLEMENTATION OF ALL SHEETING, SHORING, BRACING, DE-WATERING, AND SPECIAL EXCAVATION MEASURES REQUIRED TO MEET OSHA, FEDERAL, STATE, AND LOCAL REGULATIONS PURSUANT TO THE INSTALLATION OF THE WORK INDICATED ON THESE DRAWINGS, AS WELL AS SUBSEQUENT WORK AGREED TO BETWEEN THE OWNER AND CONTRACTOR. THE OWNER AND THE DESIGN ENGINEER ACCEPT NO RESPONSIBILITY FOR THE DESIGN(S) TO INSTALL SAID ITEMS.
8. ALL CONSTRUCTION STAKING SHALL BE BY THE CONTRACTOR AT HIS EXPENSE.
9. CONTRACTOR SHALL NOT DISTURB AREAS OUTSIDE OF THE PROJECT SITE/RIGHT OF WAY WITHOUT THE NECESSARY PERMITS/EASEMENTS.
10. EXISTING ROAD SHOULDERS SHALL BE BACKFILLED AND GRASSED. ANY DISTURBED SIDEWALK OR CURB & GUTTER SHALL BE REPAIRED TO MATCH EXISTING.
11. CONTRACTOR SHALL REPLACE ALL DISTURBED TRAFFIC STRIPING, PAVEMENT MARKINGS, MAILBOXES, AND SIGNAGE TO MATCH EXISTING.
12. NO WORK SHALL BEGIN ON THIS PROJECT WITHOUT AT LEAST 24 HOURS ADVANCE NOTIFICATION TO THE OWNER AND THE ENGINEER. IN ADDITION, NO WORK IS TO TAKE PLACE WITHOUT AN APPROVED SET OF PLANS AND SPECIFICATIONS ON THE JOB SITE. WORK IS TO BE COORDINATED WITH ALL OTHER OPERATIONS ACTIVITIES.
13. IT IS THE RESPONSIBILITY OF THE CONTRACTOR TO ENSURE THAT ALL REQUIRED PERMITS ARE OBTAINED AND IN HAND PRIOR TO THE COMMENCEMENT OF CONSTRUCTION.
14. THE CONTRACTOR SHALL BE RESPONSIBLE FOR FURNISHING ALL FILL MATERIAL. FILL MATERIAL SHALL BE CLEAN AND FREE OF ALL DEBRIS AND ORGANIC MATERIAL.
15. THE CONTRACTOR SHALL MAKE HIS OWN DETERMINATION OF ALL SURFACE AND SUBSURFACE CONDITIONS. THE CONTRACTOR WITH CONSULTATION FROM THE ENGINEER SHALL TOGETHER DETERMINE WHAT MATERIAL, IF ANY, IS TO BE WASTED.
16. ALL FIELD CHANGES SHALL BE AUTHORIZED BY THE OWNER IN WRITING IN ADVANCE OF THE WORK. IF CHANGES ARE MADE BY THE CONTRACTOR WITHOUT PRIOR WRITTEN CONSENT FROM THE OWNER, CONTRACTOR SHALL BEAR FULL RESPONSIBILITY FOR MAKING THE NECESSARY CHANGES TO BRING THE CONSTRUCTION INTO CONFORMANCE WITH APPROVED PLANS AND SPECIFICATIONS AT NO COST TO THE OWNER.
17. THE AREAS DISTURBED BY THE CONTRACTOR SHALL BE RESTORED TO THEIR ORIGINAL CONDITION UNLESS OTHERWISE NOTED ON THE PLANS.
18. ALL WATER UTILIZED DURING CONSTRUCTION SHALL BE METERED THROUGH A CONSTRUCTION WATER METER (OBTAINED FROM THE UTILITY OWNER) EQUIPPED WITH AN APPROVED BACKFLOW DEVICE.
19. IT SHALL BE THE RESPONSIBILITY OF THE CONTRACTOR TO FIELD VERIFY ALL PROPOSED CONSTRUCTION FOR FEASIBILITY AND FUNCTION. THE CONTRACTOR SHALL IMMEDIATELY NOTIFY THE ENGINEER OF ANY DISCREPANCIES OR WARRANTED CONCERNS PERTAINING TO DESIGN AND CONSTRUCTION.
20. CONSTRUCTION LAYDOWN AREAS AND STAGING TO BE AT LOCATIONS APPROVED OF BY THE OWNER.
21. THE CONTRACTOR SHALL PLAN, COORDINATE, AND EXECUTE THE WORK SUCH THAT DISRUPTION TO PERSONAL PROPERTY AND BUSINESS IS HELD TO A PRACTICAL MINIMUM.
22. All CONSTRUCTION AREAS ABUTTING LAWNS AND YARDS OF RESIDENTIAL OR COMMERCIAL PROPERTY SHALL BE RESTORED PROMPTLY. BACKFILLING OF UNDERGROUND FACILITIES, DITCHES, AND DISTURBED AREAS SHALL BE ACCOMPLISHED ON A DAILY BASIS.
23. HANDWORK, INCLUDING RAKING AND SMOOTHING, SHALL BE REQUIRED TO ENSURE THAT THE REMOVAL OF ROOTS, STICKS, ROCKS, AND OTHER DEBRIS IS ACCOMPLISHED IN ORDER TO PROVIDE A NEAT AND PLEASING APPEARANCE. GRASSING, WHEN IN SEASON, SHALL IMMEDIATELY FOLLOW IN ORDER TO ESTABLISH PERMANENT COVER AT THE EARLIEST DATE. IF GRASSING IS NOT IN SEASON, PROPER EROSION CONTROL SHALL BE INSTALLED AND MAINTAINED.
24. THE CONTRACTOR SHALL BE ORDERED TO STOP ALL WORK BY THE ENGINEER WHEN RESTORATION AND CLEANUP ARE UNSATISFACTORY, AND TO REQUIRE APPROPRIATE REMEDIAL MEASURES.

AS-BUILT RECORD DRAWINGS

1. AFTER THE FINAL INSPECTION HAS BEEN PERFORMED AND ALL ITEMS ARE SATISFACTORY TO THE CITY, AS-BUILTS SHALL BE SUBMITTED TO THE ENGINEER ALONG WITH A LETTER OF TRANSMITTAL. ACCEPTABLE SUBMITTALS WILL BE APPROVED IN WRITING. SUBMITTALS REQUIRING CORRECTIONS BEFORE BEING ACCEPTABLE WILL BE SO NOTED. AS-BUILTS MUST BE RESUBMITTED FOR REVIEW AND APPROVAL PRIOR TO THE LETTER OF ACCEPTANCE BEING ISSUED BY THE ENGINEER(S).
2. CONTRACTOR SHALL MAINTAIN FIELD "AS-BUILT" DRAWINGS AND SHALL MEASURE AND SHOW LOCATIONS OF ALL PROPOSED INFRASTRUCTURE. AS-BUILT DRAWINGS SHALL PROVIDE RIM AND INVERT ELEVATIONS OF ALL MANHOLES & PIPES.
3. CONTRACTOR SHALL PROVIDE THE ENGINEER WITH DIGITAL AND PAPER AS-BUILT RECORD DRAWINGS OF THE CONSTRUCTED IMPROVEMENTS.

TRAFFIC CONTROL NOTES

1. CONTRACTOR SHALL BE RESPONSIBLE FOR ALL TRAFFIC CONTROL, INCLUDING DEVICES, MATERIALS, PERSONNEL, PROCEDURES, OPERATIONS, AND COORDINATION. ALL TRAFFIC CONTROL SHALL BE IN ACCORDANCE WITH THE *MANUAL OF UNIFORM TRAFFIC CONTROL DEVICES (MUTCD), CURRENT EDITION* AND ALL GDOT AND LOCAL REQUIREMENTS.
2. ACCESS TO ALL ADJACENT PROPERTIES SHALL BE MAINTAINED AT ALL TIMES.
3. CONTRACTOR SHALL NOT LEAVE ANY OPEN TRENCHES OVER NIGHT. ALL TRENCHES SHALL BE BACKFILLED OR PLATED DAILY.

EROSION & SEDIMENTATION CONTROL NOTES

1. ALL EROSION AND SEDIMENT CONTROL MEASURES SHALL BE THE RESPONSIBILITY OF THE CONTRACTOR.
2. CONTRACTOR SHALL HAVE SOIL EROSION CONTROL MEASURES IN PLACE PRIOR TO THE START OF CONSTRUCTION ACTIVITIES.
3. CONTRACTOR SHALL PLACE TEMPORARY AND/OR PERMANENT GRASSING ON ALL DISTURBED PERVIOUS AREAS. CONTRACTOR SHALL INSTALL SINGLE-ROW ("TYPE A") SILT FENCE ALONG THE DOWNSTREAM EDGE OF ALL DISTURBED PERVIOUS AREAS AND INSTALL DOUBLE-ROW ("TYPE C") SILT FENCE ADJACENT TO STREAM BUFFERS. CONTRACTOR SHALL INSTALL CHECK DAMS AT 2' VERTICAL INTERVALS WHERE PROPOSED CONSTRUCTION DISTURBS OR PARALLELS ROADSIDE DRAINAGE DITCHES. 2
4. CONTRACTOR SHALL PROTECT ALL EXISTING & PROPOSED STORM STRUCTURES WITHIN THE PROJECT AREA WITH INLET PROTECTION THROUGHOUT CONSTRUCTION.

PROJECT SITE NOTES:

1. THE EXISTING CONDITIONS SURVEY WAS PROVIDED BY EMC ENGINEERING SERVICES, IMC. AND DATED 03/04/2025.
   A COPY CAN BE PROVIDED UPON WRITTEN REQUEST.
2. REPORTS:
   A. TERRACON PERFORMED A GEOTECHNICAL INVESTIGATION, AND THE SUBSEQUENT REPORT IS PROVIDED IN THE CONSTRUCTION DOCUMENTS AS APPENDIX A.
   B. NO ENVIRONMENTAL ASSESSMENT HAS BEEN PERFORMED FOR THE PROJECT AREA. THE CONTRACTOR SHALL NOTIFY THE ENGINEER WITHIN 24 HOURS OF ANY ENVIRONMENTAL CONCERN ENCOUNTERED WITHIN THE PROJECT AREA.
   C. NO ACM SURVEY HAS BEEN PERFORMED. THE CONTRACTOR SHALL TAKE CARE WHEN HANDLING ANY MATERIAL SUSPECTED TO CONTAIN ASBESTOS. THE CONTRACTOR SHALL PROPERLY DISPOSE OF ALL MATERIAL CONTAINING ASBESTOS.
3. THE PROJECT GENERALLY INCLUDES THE CONSTRUCTION OF A WELL HOUSE BUILDING AND WATER LINE EXTENSION OF TWO PREVIOUSLY OWNED STATE WELLS THAT THE CITY OF FLOWERY BRANCH PURCHASED. THE PROJECT CONSISTS OF MAKING THE WELLS A SUPPORT TO THE CURRENT DRINKING WATER SYSTEM. THE PROJECT WILL INVOLVE TRAFFIC CONTROL, EROSION CONTROL, AND ANY ANCILLARY ITEMS NECESSARY FOR PROJECT COMPLETION. PORTIONS OF THE WORK WILL TAKE PLACE WITHIN GDOT RIGHT-OF-WAY WHERE PERMITS HAVE BEEN APPROVED.
4. THE PROPOSED DEVELOPMENTS ARE LOCATED AT THE INTERSECTION OF: 4745 ATLANTA HIGHWAY AT THE NORTH END OF E RAILROAD AVENUE INTERSECTION.
5. HORIZONTAL DATA SHOWN HEREON IS BASED ON NAD83 GEORGIA STATE PLANES, WEST ZONE, US FOOT. VERTICAL DATA SHOWN HEREON IS BASED ON NAVD88 (1988).
6. THE TOTAL PROJECT SITE FOR THE MULTI-USE FACILITY IS 2.14 ACRES WITH A DISTURBED AREA OF 0.86 ACRES.
7. WETLANDS HAVE BEEN IDENTIFIED NEAR THE PROJECT AREA.
8. STATE WATERS HAVE BEEN IDENTIFIED ON OR WITHIN 200' FEET OF THE PROJECT AREA.
9. THE RECEIVING WATERS FOR THE PROJECT HAS BEEN IDENTIFIED AS LAKE LANIER.
10. IMPAIRED WATERS HAVE BEEN IDENTIFIED WITHIN 1 MILE OF THE PROJECT AREA FOR THE PROJECT. THE IMPAIRED WATER IS IDENTIFIED AS FLOWERY BRANCH; A TRIBUTARY OF LAKE LANIER.
11. THE PROPERTIES SHOWN HEREON ARE LOCATED IN FLOOD ZONE X AS PER FLOOD INSURANCE RATE MAP FOR FLOWERY BRANCH, HALL COUNTY, GA AND SHOWN ON MAP NO. 13139C0283G WITH AN EFFECTIVE DATE OF APRIL 4, 2018. FLOOD ZONE X DENOTES AREA OF MINIMAL FLOOD CONCERNS.

ESG ENGINEERING
6400 Peake Rd
Macon, GA 31210
Ph: (478) 474-4996
Fax: (478) 474-5045

GROUNDWATER WELLS #4 & #5

FOR THE
CITY OF FLOWERY BRANCH

REVISIONS

NO.	DESCRIPTION	DATE
1	ESPC SHEETS	11-7-25
2	BID SET OF PLANS	12-1-25
3	REVISED WITH CITY COMMENTS	12-5-25
4	ADDENDUM #1	12-8-25
5	ADDENDUM #2	12-11-25
6	ADDENDUM #3	12-12-25
7	REVISED WITH CITY COMMENTS	12-17-25

CONFORMED SET

GEORGIA REGISTERED No. PE046341 PROFESSIONAL ENGINEER ANDREW D SWICEGOOD

DRAWN BY: DSC
CHECKED BY: ADS
DATE: OCT 2025
SCALE: N.T.S.

CONTENT:

GENERAL NOTES

SHEET NO: 2
C0.1

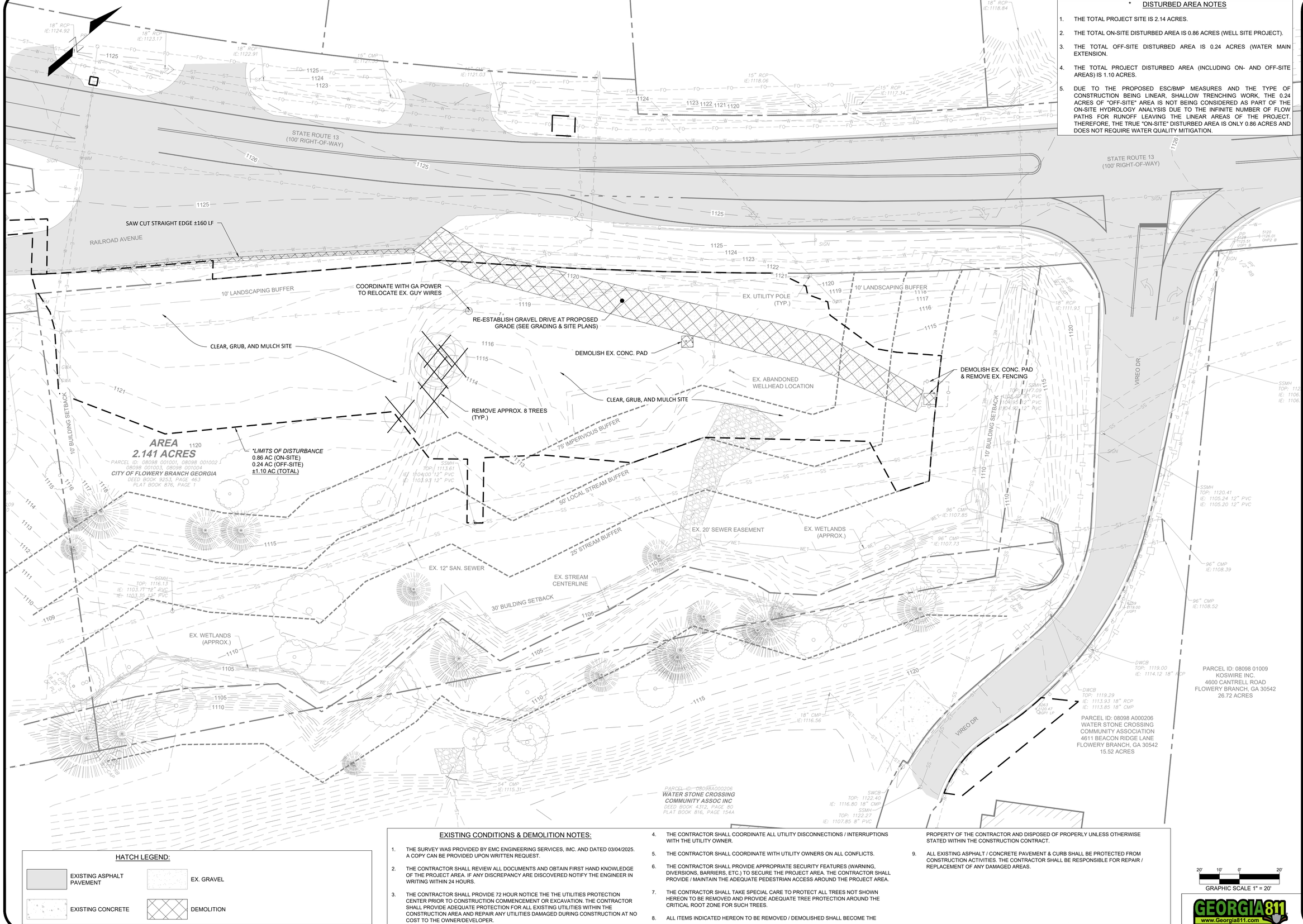

* DISTURBED AREA NOTES

1. THE TOTAL PROJECT SITE IS 2.14 ACRES.
2. THE TOTAL ON-SITE DISTURBED AREA IS 0.86 ACRES (WELL SITE PROJECT).
3. THE TOTAL OFF-SITE DISTURBED AREA IS 0.24 ACRES (WATER MAIN EXTENSION.
4. THE TOTAL PROJECT DISTURBED AREA (INCLUDING ON- AND OFF-SITE AREAS) IS 1.10 ACRES.
5. DUE TO THE PROPOSED ESC/BMP MEASURES AND THE TYPE OF CONSTRUCTION BEING LINEAR, SHALLOW TRENCHING WORK, THE 0.24 ACRES OF "OFF-SITE" AREA IS NOT BEING CONSIDERED AS PART OF THE ON-SITE HYDROLOGY ANALYSIS DUE TO THE INFINITE NUMBER OF FLOW PATHS FOR RUNOFF LEAVING THE LINEAR AREAS OF THE PROJECT. THEREFORE, THE TRUE "ON-SITE" DISTURBED AREA IS ONLY 0.86 ACRES AND DOES NOT REQUIRE WATER QUALITY MITIGATION.

HATCH LEGEND:

- EXISTING ASPHALT PAVEMENT
- EX. GRAVEL
- EXISTING CONCRETE
- DEMOLITION

EXISTING CONDITIONS & DEMOLITION NOTES:

1. THE SURVEY WAS PROVIDED BY EMC ENGINEERING SERVICES, IMC. AND DATED 03/04/2025. A COPY CAN BE PROVIDED UPON WRITTEN REQUEST.
2. THE CONTRACTOR SHALL REVIEW ALL DOCUMENTS AND OBTAIN FIRST HAND KNOWLEDGE OF THE PROJECT AREA. IF ANY DISCREPANCY ARE DISCOVERED NOTIFY THE ENGINEER IN WRITING WITHIN 24 HOURS.
3. THE CONTRACTOR SHALL PROVIDE 72 HOUR NOTICE THE THE UTILITIES PROTECTION CENTER PRIOR TO CONSTRUCTION COMMENCEMENT OR EXCAVATION. THE CONTRACTOR SHALL PROVIDE ADEQUATE PROTECTION FOR ALL EXISTING UTILITIES WITHIN THE CONSTRUCTION AREA AND REPAIR ANY UTILITIES DAMAGED DURING CONSTRUCTION AT NO COST TO THE OWNER/DEVELOPER.
4. THE CONTRACTOR SHALL COORDINATE ALL UTILITY DISCONNECTIONS / INTERRUPTIONS WITH THE UTILITY OWNER.
5. THE CONTRACTOR SHALL COORDINATE WITH UTILITY OWNERS ON ALL CONFLICTS.
6. THE CONTRACTOR SHALL PROVIDE APPROPRIATE SECURITY FEATURES (WARNING, DIVERSIONS, BARRIERS, ETC.) TO SECURE THE PROJECT AREA. THE CONTRACTOR SHALL PROVIDE / MAINTAIN THE ADEQUATE PEDESTRIAN ACCESS AROUND THE PROJECT AREA.
7. THE CONTRACTOR SHALL TAKE SPECIAL CARE TO PROTECT ALL TREES NOT SHOWN HEREON TO BE REMOVED AND PROVIDE ADEQUATE TREE PROTECTION AROUND THE CRITICAL ROOT ZONE FOR SUCH TREES.
8. ALL ITEMS INDICATED HEREON TO BE REMOVED / DEMOLISHED SHALL BECOME THE PROPERTY OF THE CONTRACTOR AND DISPOSED OF PROPERLY UNLESS OTHERWISE STATED WITHIN THE CONSTRUCTION CONTRACT.
9. ALL EXISTING ASPHALT / CONCRETE PAVEMENT & CURB SHALL BE PROTECTED FROM CONSTRUCTION ACTIVITIES. THE CONTRACTOR SHALL BE RESPONSIBLE FOR REPAIR / REPLACEMENT OF ANY DAMAGED AREAS.

20' 10' 0' 20'
GRAPHIC SCALE 1" = 20'

GEORGIA811
www.Georgia811.com

ESG ENGINEERING
6400 Peake Rd
Macon, GA 31210
Ph: (478) 474-4996
Fax: (478) 474-5045

GROUNDWATER WELLS #4 & #5

FOR THE
CITY OF FLOWERY BRANCH

REVISIONS	DESCRIPTION	DATE
1	ESPC SHEETS	11-7-25
2	BID SET OF PLANS	12-1-25
3	REVISED WITH CITY COMMENTS	12-5-25
4	ADDENDUM #1	12-8-25
5	ADDENDUM #2	12-11-25
6	ADDENDUM #3	12-12-25
7	REVISED WITH CITY COMMENTS	12-17-25

CONFORMED SET

GEORGIA REGISTERED No. PE046341 PROFESSIONAL ENGINEER ANDREW D SWICEGOOD

DRAWN BY: DSC
CHECKED BY: ADS
DATE: OCT 2025
SCALE: SEE SCALE

CONTENT:

CIVIL:
EXISTING CONDITIONS & DEMOLITION PLAN

SHEET NO: 2
C1.0

* DISTURBED AREA NOTES

1. THE TOTAL PROJECT SITE IS 2.14 ACRES.
2. THE TOTAL ON-SITE DISTURBED AREA IS 0.86 ACRES (WELL SITE PROJECT).
3. THE TOTAL OFF-SITE DISTURBED AREA IS 0.24 ACRES (WATER MAIN EXTENSION.
4. THE TOTAL PROJECT DISTURBED AREA (INCLUDING ON- AND OFF-SITE AREAS) IS 1.10 ACRES.
5. DUE TO THE PROPOSED ESC/BMP MEASURES AND THE TYPE OF CONSTRUCTION BEING LINEAR, SHALLOW TRENCHING WORK, THE 0.24 ACRES OF "OFF-SITE" AREA IS NOT BEING CONSIDERED AS PART OF THE ON-SITE HYDROLOGY ANALYSIS DUE TO THE INFINITE NUMBER OF FLOW PATHS FOR RUNOFF LEAVING THE LINEAR AREAS OF THE PROJECT. THEREFORE, THE TRUE "ON-SITE" DISTURBED AREA IS ONLY 0.86 ACRES AND DOES NOT REQUIRE WATER QUALITY MITIGATION.

STATE ROUTE 13
(100' RIGHT-OF-WAY)

RAILROAD AVENUE

10' LANDSCAPING BUFFER

SEE SHEET C2.2 FOR BUILDING DETAIL PLAN

CHEMICAL FEED BUILDING
FFE: 1122.20
AREA: 392 SF

±1,400 SY GRAVEL DRIVE
(SEE DETAIL ON SHEET C9.0)

PR. DIESEL GENERATOR

±620 LF 6' CHAIN LINK SECURITY FENCING W/ BARBED WIRE

HENDERSON WELL

EX. ABANDONED WELLHEAD & MARK LOCATION WITH STAKE

WATERSTONE WELL

PR. 24' DOUBLE-SWING GATE W/ BARBED WIRE

10' BUILDING SETBACK

75' IMPERVIOUS BUFFER

50' LOCAL STREAM BUFFER

25' STREAM BUFFER

30' BUILDING SETBACK

EX. STREAM CENTERLINE

EX. WETLANDS (APPROX.)

AREA
2.141 ACRES
PARCEL ID: 08098 001001, 08098 001002 08098 001003, 08098 001004
CITY OF FLOWERY BRANCH GEORGIA
DEED BOOK 9253, PAGE 463
PLAT BOOK 876, PAGE 1

*LIMITS OF DISTURBANCE
0.86 AC (ON-SITE)
0.24 AC (OFF-SITE)
±1.10 AC (TOTAL)

PERMANENT UTILITY EASEMENT

TEMPORARY CONSTRUCTION EASEMENT

*LIMITS OF DISTURBANCE
0.86 AC (ON-SITE)
0.24 AC (OFF-SITE)
±1.10 AC (TOTAL)

VIREO DR

EX. TOWNHOUSE

PARCEL ID: 08098A000206
WATER STONE CROSSING COMMUNITY ASSOC INC
DEED BOOK 4312, PAGE 80
PLAT BOOK 816, PAGE 154A

PARCEL ID: 08098 01009
KOSWIRE INC.
4600 CANTRELL ROAD
FLOWERY BRANCH, GA 30542
26.72 ACRES

PARCEL ID: 08098 A000206
WATER STONE CROSSING COMMUNITY ASSOCIATION
4611 BEACON RIDGE LANE
FLOWERY BRANCH, GA 30542
15.52 ACRES

GENERAL SITE NOTES:

1. CONTRACTOR SHALL CLEAR & GRUB ALL AREAS WITHIN THE EASEMENT. ALL REMOVED MATERIAL SHALL BE HAULED OFF SITE AND DISPOSED OF AT A LICENSED LANDFILL-NO BURNING SHALL BE ALLOWED.
2. EXISTING UTILITIES ARE APPROXIMATE AND ARE TO BE FIELD VERIFIED BY CONTRACTOR. CONTRACTOR SHALL INFORM ENGINEER OF ANY DISCREPANCIES IN INFORMATION PRIOR TO BEGINNING WORK.
3. HORIZONTAL DATA SHOWN HEREON IS BASED ON NAD83 GEORGIA STATE PLANES, WEST ZONE, US FOOT. VERTICAL DATA SHOWN HEREON IS BASED ON NAVD88.
4. CONTRACTOR SHALL PROTECT ALL EXISTING UTILITIES. CONTRACTOR SHALL REPAIR OR REPLACE, AT HIS OR HER OWN EXPENSE, ANY UTILITIES DAMAGED DURNING CONSTRUCTION.
5. CONTRACTOR SHALL COORDINATE WITH POWER & TELECOM COMPANIES FOR PROTECTION OF ANY EXISTING AND/OR RELOCATED OVERHEAD OR UNDERGROUND UTILITIES.

EROSION & SEDIMENT CONTROL NOTE:

1. CONTRACTOR SHALL PLACE TEMP. AND PERM. GRASSING ON ALL DISTURBED PERVIOUS AREAS. CONTRACTOR SHALL INSTALL SINGLE-ROW SILT FENCE ALONG THE DOWNSTREAM EDGE OF ALL DISTURBED PERVIOUS AREAS AND INSTALL DOUBLE-ROW SILT FENCE ADJACENT TO STREAM BUFFERS. CONTRACTOR SHALL INSTALL CHECK DAMS AT 2' VERTICAL INTERVALS WHERE PROPOSED CONSTRUCTION DISTURBS OR PARALLELS ROADSIDE DRAINAGE DITCHES.

HATCH LEGEND:

- ASPHALT PAVEMENT
- CONCRETE PAD AREAS
- GRAVEL SITE PAD / ACCESS DRIVE

GRAPHIC SCALE 1" = 20'

GEORGIA811 www.Georgia811.com

ESG ENGINEERING
6400 Peake Rd
Macon, GA 31210
Ph: (478) 474-4996
Fax: (478) 474-5045

GROUNDWATER WELLS #4 & #5

FOR THE
CITY OF FLOWERY BRANCH

REVISIONS	DESCRIPTION	DATE
1	ESPC SHEETS	11-7-25
2	BID SET OF PLANS	12-1-25
3	REVISED WITH CITY COMMENTS	12-5-25
4	ADDENDUM #1	12-8-25
5	ADDENDUM #2	12-11-25
6	ADDENDUM #3	12-12-25
7	REVISED WITH CITY COMMENTS	12-17-25

CONFORMED SET

GEORGIA REGISTERED No. PE046341 PROFESSIONAL ENGINEER ANDREW D SWICEGOOD

DRAWN BY: DSC
CHECKED BY: ADS
DATE: OCT 2025
SCALE: SEE SCALE

CONTENT:
CIVIL:
SITE PLAN

SHEET NO: 2 3 7
C2.0

CONSTRUCTION NOTES:

1. ALL EXTERIOR, EXPOSED ABOVE GROUND PIPING SHALL HAVE INSULATION PROVIDED, CONSISTING OF A POLYURETHANE FOAM CORE AND PVC JACKET TO MATCH CORRESPONDING PIPE SIZE. CONTRACTOR SHALL ENSURE SEAL BETWEEN JACKET/INSULATION AND PIPING.
2. PR. 3-WAY FIRE HYDRANT ASSEMBLY, CONSISTING OF 8"x6" RJ DI TEE, 6" RJ GATE VALVE W/ BOX & COVER, & 6" RJ DI LEAD PIPE.
3. ALL DUCTILE IRON PIPE & FITTINGS SHALL HAVE A CEMENT MORTAR/BITUMINOUS LINING IN ACCORDANCE WITH NSF-61 STANDARDS. ALL VALVES SHALL HAVE FUSION-BONDED EPOXY (FBE) LINING AS APPLICABLE, CONFORMING TO NSF-61.
4. REQUIREMENTS FOR COATING OF ABOVE-GROUND (EXPOSED) DUCTILE IRON PIPES, FITTINGS, AND VALVES:

PROP. SYSTEM TYPE:	EPOXY/EPOXY/POLYURETHANE
PROP. SURFACE PREPARATION:	PER MANUFACTURER'S RECOMMENDATION
PROP. PRIMER:	SERIES N140 POTA-POX PLUS - 4.0 TO 6.0 MILS DFT
PROP. INTERMEDIATE COAT:	SERIES N140 POTA-POX PLUS - 4.0 TO 6.0 MILS DFT
PROP. FINISH COAT:	SERIES 1094 ENDURA-SHIELD - 2.0 TO 5.0 MILS DFT
PROP. TOTAL DFT:	10.0 TO 17.0 MILS
PROP. FINISH COLOR:	[AS SELECTED BY ENGINEER] FROM MANUFACTURER'S STANDARD COLORS

5. REQUIREMENTS FOR COATING OF BELOW GRADE (BURIED) DUCTILE IRON PIPES, FITTINGS, AND VALVES SHALL BE AS OUTLINED IN SPECIFICATION SECTIONS 11200 & 02530.

EDGE OF GRAVEL DRIVE

SCALE: 1/2" = 1'-0"

ALL ELECTRICAL & HVAC LINES NOT SHOWN FOR CLARITY - SEE RESPECTIVE PLANS FOR DETAILED PLACEMENT OF HVAC SYSTEM COMPONENTS.

PR. 6" RJXFL DIP SPOOL PIECE
PR. 8"x6" RJ DI REDUCER
PR. 1.5" DOUBLE STRAP TAPPING SADDLE (INCL. UNDER WELL SITE IMPROVEMENTS LINE ITEM)
PR. PRECAST METER/BACKFLOW VAULT
PR. 1.5" PVC WATER LINE W/ ISOLATION VALVE, METER, AND BACKFLOW PREVENTER IN METER BOX TO BE SET IN STONE BEDDING
8'
PR. 6" FL. 709DCDA DOUBLE CHECK DETECTOR ASSEMBLY BACKFLOW PREVENTER
PR. 6" FL DIP SPOOL PIECE
PR. 6" FL DI 90° BEND
TANKLESS WATER HEATER (SEE PLUMBING PLAN)
CHLORINE INJECTION (SEE DETAIL ON SHEET C9.1)
FLUORIDE INJECTION (SEE DETAIL ON SHEET C9.1)
PR. 6" FL GATE VALVE W/ HANDWHEEL
PR. 6"x4" FL DI WYE
PR. 6" FL DIP
6" CORDONEL ULTRASONIC FLOW METER
PR. 6" FL. GATE VALVE W/ HANDWHEEL
CORE WALL & INSTALL LS-200 LINK SEAL. PROVIDE GROUTING OF ANNULAR SPACE ON BOTH INTERIOR & EXTERIOR OF BUILDING (TYP. ALL WALL PENETRATIONS)
PR. 6" FL DI 90° BEND
PR. 6" RJxFL DIP SPOOL PIECE
PR. 4" FL. GATE VALVE W/ HANDWHEEL
PR. 4" FL DI 45° BEND
PR. 4" FL DIP
PR. 1.5" DOMESTIC WATER
4" CORDONEL ULTRASONIC FLOW METER
PR. 4" FL. GATE VALVE W/ HANDWHEEL
PR. 4" FL. DI 90° BEND
PR. 4" FL DI SPOOL PIECE
PR. 6" RJ DIP
PR. 59.5"x83.5" ALUMINUM ACCESS HATCH CAST INTO VAULT TOP (EJ H60841918 OR APPROVED EQUAL)
PR. FROST PROOF YARD HYDRANT W/ 3/4" HOSE CONNECTION
PIPE GALLERY ROOM
PR. EYE WASH & SHOWER STATION U-LINE H-10735 (TYP. OF 2)
4-EA GRUNDFOS CHEMICAL FEED PUMPS DDE 6-10 B-PV/T/C-X-31003BC (SEE SECTION 70001)
CHLORINE ROOM
PR. WATER SPIGOT PRIER C-634 (TYP. OF 4 - SEE PLUMBING PLAN)
SEE SECTION 70001 FOR CHEMICAL FEED SYSTEM PIPING & VALVES
PR. REMOVABLE RAMP (U-LINE H-4038)
PR. SPILL CONTAINMENT PALLET (U-LINE H-4036)
DEPRESSED CHEMICAL STORAGE BASIN
COVERED SHELTER ROOF EDGE/EAVE
CONC. WALKING AREA (4" THICK)
PR. FULL DEPTH ASPHALT SECTION PER DETAIL ON SHEET C9.4
5'
4-EA GRUNDFOS CHEMICAL FEED PUMPS DDE 6-10 B-PV/T/C-X-31003BC (SEE SECTION 70001)
PR. 4" CPVC UNDER DRAIN SPILL CONTAINMENT SYSTEM (SEE PLUMBING PLAN FOR DETAILED LAYOUT)
FLUORIDE ROOM
PR. MOP BASIN PROFLO PFMB2424 (TYP. OF 2)
PR. REMOVABLE RAMP (U-LINE H-4038)
PR. SPILL CONTAINMENT FLOOR DRAIN (TYP. OF 5)
PR. 3" PVC DRAIN LINE FROM BACKFLOW VAULT
DEPRESSED CHEMICAL STORAGE BASIN
PR. 4" PVC BUILDING SEWER LINE (SEE PLUMBING PLAN FOR DETAILED LAYOUT)
PR. SPILL CONTAINMENT PALLET (U-LINE H-4036)
PR. 4" CPVC UNDER DRAIN SPILL CONTAINMENT SYSTEM
SSMH-2 (SEE COATING NOTES)
RIM: 1122.20
INV: 1116.20
CONTRACTOR SHALL RUN DRAIN LINE @ 1% MIN. SLOPE & DAYLIGHT INTO PR. SLOPE
SSMH-1 (VACUUM POINT - SEE COATING NOTES)
RIM: 1122.20
INV: 1114.20
CO-2
RIM: 1122.10
INV: 1113.50

CHEMICAL STORAGE BASIN & SPILL CONTAINMENT MANHOLE COATING SYSTEM:

- SURFACE PREP: CSP 4–6
- PRIMER: 100% SOLIDS EPOXY OR VE PRIMER, 6–10 MILS
- INTERMEDIATE COAT: NOVOLAC EPOXY OR VE, 15–20 MILS
- TOPCOAT: HIGH-BUILD NOVOLAC EPOXY OR VINYL ESTER, 80–125 MILS

WELL HOUSE PREFABRICATED ENCLOSURE BY CLAY-GREENE (TYP. OF 2)
PR. 4" FL. CHECK VALVE
PR. 4"x6" FL. DI REDUCER
PR. 6" FL. DI LONG RADIUS 90° BEND
PR. 6"x4" RJ DI TEE
PR. 4" FL. DI LONG RADIUS 90° BEND
SEE WELL SECTIONS ON DETAIL SHEET C9.3
HENDERSON WELL - SEE SECTION 80001 FOR WELL REHABILITATION
PLACE 8'x6' CONC. PAD FOR WELL HOUSE (SEE DETAIL ON SHEET C9.4)
PR. 6" RJ GATE VALVE W/ RISER BOX & COVER
PR. 4" RJ DIP
SEE DETAIL ON SHEET C9.4 FOR BLOW-OFF PIPING
PR. INSULATED FIBERGLASS ENCLOSURE, APPROX. DIMENSIONS 36x24x36 (HUBBELL HOT BOX OR APPROVED EQUAL)
4" CRUSHER RUN PLACED BENEATH ENCLOSURE
PR. 4" RJ DI 22.5° BEND
TO WATERSTONE WELL (SEE INSET "A" THIS SHEET)

INSET "A"
SCALE: 1/2" = 1'-0"

25' STREAM BUFFER
EDGE OF GRAVEL DRIVE
WELL HOUSE PREFABRICATED ENCLOSURE BY CLAY-GREENE (TYP. OF 2)
PLACE 8'x6' CONC. PAD FOR WELL HOUSE (SEE DETAIL ON SHEET C9.4)
PR. 4" FL. CHECK VALVE
PR. 2-EA 4" FL. DI LONG RADIUS 90° BEND, 4" FLxRJ DI SPOOL PIECE, & 4" RJ DI 90° BEND
TO CHEMICAL FEED BUILDING (THIS SHEET)
PR. 4" RJ DIP
PR. 4" RJ GATE VALVE W/ RISER BOX & COVER
PR. 4" RJ DI TEE
SEE WELL SECTIONS ON DETAIL SHEET C9.3
SEE DETAIL ON SHEET C9.4 FOR BLOW-OFF PIPING
PR. 4" RJ DIP
WATERSTONE WELL - SEE SECTION 80001 FOR WELL REHABILITATION
4" CRUSHER RUN PLACED BENEATH ENCLOSURE
PR. INSULATED FIBERGLASS ENCLOSURE, APPROX. DIMENSIONS 36x24x36 (HUBBELL HOT BOX OR APPROVED EQUAL)

ESG ENGINEERING
6400 Peake Rd
Macon, GA 31210
Ph: (478) 474-4996
Fax: (478) 474-5045

GROUNDWATER WELLS #4 & #5

FOR THE
CITY OF FLOWERY BRANCH

NO.	DESCRIPTION	DATE
1	ESPC SHEETS	11-7-25
2	BID SET OF PLANS	12-1-25
3	REVISED WITH CITY COMMENTS	12-5-25
4	ADDENDUM #1	12-8-25
5	ADDENDUM #2	12-11-25
6	ADDENDUM #3	12-12-25
7	REVISED WITH CITY COMMENTS	12-17-25

CONFORMED SET

GEORGIA REGISTERED No. PE046341 PROFESSIONAL ENGINEER ANDREW D SWICEGOOD

DRAWN BY: DSC
CHECKED BY: ADS
DATE: OCT 2025
SCALE: SEE SCALE

CONTENT:

CIVIL:
BUILDING PIPING PLAN

SHEET NO: 2 3 7
C2.1

GEORGIA811 www.Georgia811.com

CONSTRUCTION NOTES:

1. INTERIOR WALL COATING FOR THE CHEMICAL FEED BUILDING SHALL BE AS FOLLOWS:
   - BASE: EPOXY PRIMER (8-12 MILS DFT)
   - TOP: CHEMICAL-RESISTANT EPOXY OR NOVOLAC EPOXY (6-10 MILS)
2. INTERIOR & EXTERIOR FLOOR COATING FOR THE CHEMICAL FEED BUILDING SHALL BE AS FOLLOWS:
   - BASE: EPOXY FLOOR PRIMER (3-5 MILS DFT)
   - INTERMEDIATE: HIGH-BUILD EPOXY COAT (10-20 MILS DFT)
   - TOP: UV-STABLE ALIPHATIC POLYURETHANE (2-4 MILS DFT)
3. LINING FOR CHEMICAL STORAGE BASIN SHALL BE AS FOLLOWS:
   - SURFACE PREP: CSP 4–6
   - PRIMER: 100% SOLIDS EPOXY OR VE PRIMER, 6–10 MILS
   - INTERMEDIATE COAT: NOVOLAC EPOXY OR VE, 15–20 MILS
   - TOPCOAT: HIGH-BUILD NOVOLAC EPOXY OR VINYL ESTER, 80–125 MILS
4. COATING SYSTEM SHALL BE BY TNEMEC, PPG, SHERWIN-WILLIAMS, OR APPROVED EQUAL.
5. CONTRACTOR SHALL SUBMIT A SCHEDULE OF THE PROPOSED WALL & FLOOR COATING SYSTEM PRIOR TO ORDERING MATERIALS FOR REVIEW AND APPROVAL BY THE ENGINEER.

CONTRACTOR SHALL RUN/STUB-OUT 2.5" PVC CONDUIT TO METERING POINT AT BLDG. (SEE UTILITY PLAN FOR CONTINUATION)

EDGE OF GRAVEL DRIVE

SCALE: 1/2" = 1'-0"

ALL ELECTRICAL & HVAC EQUIPMENT NOT SHOWN FOR CLARITY - SEE RESPECTIVE PLANS FOR DETAILED PLACEMENT OF HVAC SYSTEM COMPONENTS.

PR. HVAC CONDENSER PAD (TYP. OF 3; SEE DETAIL ON SHEET C9.4)

PR. BOLLARD (TYP. OF 4)

PR. WALL PACK LIGHTS (TYP. OF 3)

PREFABRICATED CHEMICAL FEED BUILDING (SEE BUILDING PLANS)

PIPE GALLERY ROOM

SEE ELECTRICAL SHEETS FOR EXACT PLACEMENT & LAYOUT OF EQUIPMENT

SEE ELECTRICAL SHEETS FOR EXACT PLACEMENT & LAYOUT OF ELECTRICAL & CONTROLS EQUIPMENT.

PR. FIBERGLASS ENCLOSURE, APPROX. DIMENSIONS 36x24x36 (HUBBELL HOT BOX OR APPROVED EQUAL)

SEE ELECTRICAL SHEETS FOR CONDUIT/WIRING RUNS

DEPRESSED CHEMICAL STORAGE BASIN (SEE NOTE #3)

PR. EYE WASH & SHOWER STATION U-LINE H-10735 (TYP. OF 2 - SEE PLUMBING PLANS)

CHLORINE ROOM

PR. MOP BASIN PROFLO PFMB2424 (TYP. OF 2 - SEE PLUMBING PLANS)

BUILDING FFE: 1122.20

PR. REMOVABLE RAMP (U-LINE H-4038)

PR. SPILL CONTAINMENT PALLET (U-LINE H-4036)

COVERED SHELTER ROOF EDGE/EAVE

4" CONC. WALKING AREA (SEE NOTE #2)

PR. FULL DEPTH ASPHALT SECTION PER DETAIL ON SHEET C9.4

METAL DOOR (TYP. OF 3)

FLUORIDE ROOM

PR. WATER SPIGOT PRIER C-634 (TYP. OF 4 - SEE PLUMBING PLAN)

PR. REMOVABLE RAMP (U-LINE H-4038)

PR. SPILL CONTAINMENT FLOOR DRAIN (TYP. OF 5 - SEE PLUMBING PLAN)

PR. SPILL CONTAINMENT PALLET (U-LINE H-4036)

DEPRESSED CHEMICAL STORAGE BASIN (SEE NOTE #3)

POLE BARN CHEMICAL STORAGE COVER

PR. CONC. FOOTER (TYP. OF 4) (SEE DETAIL ON SHEET C9.4)

PR. 4" DOWNSPOUT AND 1'x1.5' SPLASH PAD (TYP. OF 3)

PLACE 8'x6' CONC. PAD FOR WELL HOUSE (SEE DETAIL ON SHEET C9.4)

4" CRUSHER RUN PLACED BENEATH ENCLOSURE

HENDERSON WELL

PR. HENDERSON WELL MAIN PANEL (SEE ELECTRICAL SHEETS)

TO WATERSTONE WELL (SEE INSET "A" THIS SHEET)

INSET "A"
SCALE: 1/2" = 1'-0"

25' STREAM BUFFER

PR. CHAIN LINK FENCE

EDGE OF GRAVEL DRIVE

PLACE 8'x6' CONC. PAD FOR WELL HOUSE (SEE DETAIL ON SHEET C9.4)

PR. FIBERGLASS ENCLOSURE, APPROX. DIMENSIONS 36x24x36 (HUBBELL HOT BOX OR APPROVED EQUAL)

WATERSTONE WELL

4" CRUSHER RUN PLACED BENEATH ENCLOSURE

PR. WATERSTONE WELL MAIN PANEL (SEE ELECTRICAL SHEETS)

PR. 3-PHASE POWER (SEE ELECTRICAL FOR CONTINUATION)

TO CHEMICAL FEED BUILDING (THIS SHEET)

ESG ENGINEERING
6400 Peake Rd
Macon, GA 31210
Ph: (478) 474-4996
Fax: (478) 474-5045

GROUNDWATER WELLS #4 & #5

FOR THE
CITY OF FLOWERY BRANCH

NO	DESCRIPTION	DATE
1	ESPC SHEETS	11-7-25
2	BID SET OF PLANS	12-1-25
3	REVISED WITH CITY COMMENTS	12-5-25
4	ADDENDUM #1	12-8-25
5	ADDENDUM #2	12-11-25
6	ADDENDUM #3	12-12-25
7	REVISED WITH CITY COMMENTS	12-17-25

CONFORMED SET

GEORGIA REGISTERED No. PE046341 PROFESSIONAL ENGINEER ANDREW D SWICEGOOD

DRAWN BY: DSC
CHECKED BY: ADS
DATE: OCT 2025
SCALE: SEE SCALE

CONTENT:

CIVIL:
BUILDING DETAIL PLAN

SHEET NO: 37
C2.2

GEORGIA811 www.Georgia811.com

* DISTURBED AREA NOTES

1. THE TOTAL PROJECT SITE IS 2.14 ACRES.
2. THE TOTAL ON-SITE DISTURBED AREA IS 0.86 ACRES (WELL SITE PROJECT).
3. THE TOTAL OFF-SITE DISTURBED AREA IS 0.24 ACRES (WATER MAIN EXTENSION.
4. THE TOTAL PROJECT DISTURBED AREA (INCLUDING ON- AND OFF-SITE AREAS) IS 1.10 ACRES.
5. DUE TO THE PROPOSED ESC/BMP MEASURES AND THE TYPE OF CONSTRUCTION BEING LINEAR, SHALLOW TRENCHING WORK, THE 0.24 ACRES OF "OFF-SITE" AREA IS NOT BEING CONSIDERED AS PART OF THE ON-SITE HYDROLOGY ANALYSIS DUE TO THE INFINITE NUMBER OF FLOW PATHS FOR RUNOFF LEAVING THE LINEAR AREAS OF THE PROJECT. THEREFORE, THE TRUE "ON-SITE" DISTURBED AREA IS ONLY 0.86 ACRES AND DOES NOT REQUIRE WATER QUALITY MITIGATION.

STATE ROUTE 13 (100' RIGHT-OF-WAY)

RAILROAD AVENUE

10' LANDSCAPING BUFFER

PR. 4" WATER

BUILDING SQFT: 392
FFE: 1122.20

EX. ABANDONED WELL

PR. 8" WATER

PR. 4" SAN. SEWER

10' BUILDING SETBACK

75' IMPERVIOUS BUFFER

50' LOCAL STREAM BUFFER

25' STREAM BUFFER

30' BUILDING SETBACK

EX. 20' SEWER EASEMENT

EX. WETLANDS (APPROX.)

EX. STREAM CENTERLINE

PR. 8" WATER (DIRECTIONAL DRILL)

PERMANENT UTILITY EASEMENT

VIREO DR

AREA
2.141 ACRES
PARCEL ID: 08098 001001, 08098 001002
08098 001003, 08098 001004
CITY OF FLOWERY BRANCH GEORGIA
DEED BOOK 9253, PAGE 463
PLAT BOOK 876, PAGE 1

*LIMITS OF DISTURBANCE
0.86 AC (ON-SITE)
0.24 AC (OFF-SITE)
±1.10 AC (TOTAL)

*LIMITS OF DISTURBANCE
0.86 AC (ON-SITE)
0.24 AC (OFF-SITE)
±1.10 AC (TOTAL)

PARCEL ID: 08098 01009
KOSWIRE INC.
4600 CANTRELL ROAD
FLOWERY BRANCH, GA 30542
26.72 ACRES

PARCEL ID: 08098 A000206
WATER STONE CROSSING
COMMUNITY ASSOCIATION
4611 BEACON RIDGE LANE
FLOWERY BRANCH, GA 30542
15.52 ACRES

TEMPORARY CONSTRUCTION EASEMENT

PARCEL ID: 08098A000206
WATER STONE CROSSING COMMUNITY ASSOC INC
DEED BOOK 4312, PAGE 80
PLAT BOOK 816, PAGE 154A

GRAPHIC SCALE 1" = 20'

GEORGIA811 www.Georgia811.com

PAVING, GRADING, & DRAINAGE NOTES:

1. THE CONTRACTOR SHALL BE RESPONSIBLE FOR FURNISHING ALL FILL MATERIAL. FILL MATERIAL SHALL BE CLEAN AND FREE OF ALL DEBRIS AND ORGANIC MATERIAL. SUITABLE FILL MATERIAL SHALL BE PLACED IN LIFTS OF 8" OR LESS AND COMPACTED TO 95% STANDARD PROCTOR.
2. A GEOTECHNICAL REPORT HAS BEEN PREPARED BY TERRACON AND HAS BEEN INCLUDED IN THE CONTRACT DOCUMENTS AS APPENDIX A.
3. THE CONTRACTOR SHALL GRADE THE SITE TO PROVIDE POSITIVE DRAINAGE AS INDICATED BY THE PROPOSED ELEVATIONS, CONTOURS, AND DRAINAGE SLOPE ARROWS.
4. CONTRACTOR SHALL ADJUST ALL EXISTING AND PROPOSED STRUCTURES (MANHOLES, VALVE BOXES, ETC.) TO FINISHED GRADE ELEVATIONS.
5. FINAL GRADES SHALL BE FLUSH WITH BACK OF CURB, EDGE OF PAVEMENT, AND / OR SIDEWALK GRADES.
6. SEE DETAILS FOR TYPICAL PAVEMENT SECTIONS
7. THE PRIMARY PERMITTEE WILL RETAIN ESG ENGINEERING (THE DESIGN PROFESSIONAL) DURING THE INTERMEDIATE GRADING AND DRAINAGE BMP PHASE, AS WELL AS, THE FINAL BMP PHASE.

EROSION & SEDIMENT CONTROL NOTE:

1. CONTRACTOR SHALL PLACE TEMP. AND PERM. GRASSING ON ALL DISTURBED PERVIOUS AREAS. CONTRACTOR SHALL INSTALL SINGLE-ROW SILT FENCE ALONG THE DOWNSTREAM EDGE OF ALL DISTURBED PERVIOUS AREAS AND INSTALL DOUBLE-ROW SILT FENCE ADJACENT TO STREAM BUFFERS. CONTRACTOR SHALL INSTALL CHECK DAMS AT 2' VERTICAL INTERVALS WHERE PROPOSED CONSTRUCTION DISTURBS OR PARALLELS ROADSIDE DRAINAGE DITCHES.

ESG ENGINEERING
6400 Peake Rd
Macon, GA 31210
Ph: (478) 474-4996
Fax: (478) 474-5045

GROUNDWATER WELLS #4 & #5

FOR THE
CITY OF FLOWERY BRANCH

REVISIONS	DESCRIPTION	DATE
1	ESPC SHEETS	11-7-25
2	BID SET OF PLANS	12-1-25
3	REVISED WITH CITY COMMENTS	12-5-25
4	ADDENDUM #1	12-8-25
5	ADDENDUM #2	12-11-25
6	ADDENDUM #3	12-12-25
7	REVISED WITH CITY COMMENTS	12-17-25

CONFORMED SET

GEORGIA REGISTERED PROFESSIONAL ENGINEER No. PE046341 ANDREW D SWICEGOOD

DRAWN BY: DSC
CHECKED BY: ADS
DATE: OCT 2025
SCALE: SEE SCALE

CONTENT:
CIVIL:
GRADING & DRAINAGE PLAN

SHEET NO: 2 3 7
C3.0

* DISTURBED AREA NOTES

1. THE TOTAL PROJECT SITE IS 2.14 ACRES.
2. THE TOTAL ON-SITE DISTURBED AREA IS 0.86 ACRES (WELL SITE PROJECT).
3. THE TOTAL OFF-SITE DISTURBED AREA IS 0.24 ACRES (WATER MAIN EXTENSION.
4. THE TOTAL PROJECT DISTURBED AREA (INCLUDING ON- AND OFF-SITE AREAS) IS 1.10 ACRES.
5. DUE TO THE PROPOSED ESC/BMP MEASURES AND THE TYPE OF CONSTRUCTION BEING LINEAR, SHALLOW TRENCHING WORK, THE 0.24 ACRES OF "OFF-SITE" AREA IS NOT BEING CONSIDERED AS PART OF THE ON-SITE HYDROLOGY ANALYSIS DUE TO THE INFINITE NUMBER OF FLOW PATHS FOR RUNOFF LEAVING THE LINEAR AREAS OF THE PROJECT. THEREFORE, THE TRUE "ON-SITE" DISTURBED AREA IS ONLY 0.86 ACRES AND DOES NOT REQUIRE WATER QUALITY MITIGATION.

PR. DIG PIT

EX. 6" PVC WATER LINE (OWNED BY CITY OF GAINESVILLE)

CUT, CAP, & ABANDON EX. 2" WATER LINE IN PLACE
GDOT APPROVAL
#U-139-012970-1

STATE ROUTE 13
(100' RIGHT-OF-WAY)

EX. 2" PVC WATER LINE (OWNED BY CITY OF FLOWERY BRANCH)

PR. LAUNCHING PIT

CONNECT TO EX. LINE W/ 2" TAPPING SLEEVE, 2"x4" RJ DI REDUCER, 4" RJ DI BENDS, & 4" GATE VALVE W/ BOX & COVER (5)

4" RJ DIP WATER MAIN INSTALLED VIA HORIZONTAL DIRECTIONAL DRILL
GDOT APPROVAL
#U-139-012970-1

STATE ROUTE 13
(100' RIGHT-OF-WAY)

EX. 6" HIGH PRESSURE STL. GAS MAIN

8" RJ DI 90° BEND

OPEN CUT PAVEMENT (SEE PAVEMENT PATCH DETAIL ON SHEET 9.0)

POTHOLE AND VERIFY IF EX. WATER LINE IS ACTIVE

MATCHLINE - SEE SHEET 4.1

RAILROAD AVENUE

EX. 10" RECLAIM WATER

4" RJ DI 45° BEND

PR. RECEIVING PIT

EX. 10" RECLAIM WATER

PR. FIRE HYDRANT ASSEMBLY (INCL. 8"x6" RJ DI TEE, 6" RJ GATE VALVE, & 6" RJ DI LEAD PIPE)

EX. FIBER OPTIC LINE

EX. 1.25" GAS LINE

10' LANDSCAPING BUFFER

CONTRACTOR SHALL RUN/STUB-OUT 2.5" PVC CONDUIT FROM EX. POWER POLE TO PR. METERING POINT AT BLDG. (5)

10' LANDSCAPING BUFFER

EX. 2" WATER

PR. DIG PIT

8" RJ DI 45° BEND

PR. 4" DIP

HENDERSON WELL

COORDINATE WITH GA POWER FOR RELOCATION OF EX. GUY WIRES

PR. DIESEL GENERATOR ON CONC. SLAB PER DETAIL ON SHEET C9.4

PR. 8" RJ DI TEE W/ 8"x4" RJ DI REDUCER

PR. 8" RJ GATE VALVE W/ BOX & COVER

POTHOLE AND VERIFY IF EX. WATER LINE IS ACTIVE

SEE BUILDING PIPING PLAN FOR CONTINUATION

PR. 4" WATER

EX. ABANDONED WELL

WATERSTONE WELL

CO-1
RIM:1121.37
INV:1110.50

PR. 8" DIP

72.33' of 4" @ 4.15%

CO-2
RIM:1122.01
INV:1113.50

UNDG. POWER TO WELLS (TYP.)

8" RJ DI 45° BEND

PR. 8" WATER

61.88' of 4" @ 4.31%

PR. 8" RJ DI TEE

10' BUILDING SETBACK

AREA
2.141 ACRES
PARCEL ID: 08098 001001, 08098 001002
08098 001003, 08098 001004
CITY OF FLOWERY BRANCH GEORGIA
DEED BOOK 9253, PAGE 463
PLAT BOOK 876, PAGE 1

*LIMITS OF DISTURBANCE
0.86 AC (ON-SITE)
0.24 AC (OFF-SITE)
±1.10 AC (TOTAL)

75' IMPERVIOUS BUFFER

Ø48" ISOLATED MANHOLE FOR CHEMICAL SPILL CONTAINMENT - ANY SPILLS TO BE REMOVED BY VACUUM TRUCK. THIS MH IS NOT CONNECTED TO THE SANITARY SEWER SYSTEM.

PR. 8" WATER

8" RJ DI 45° BEND

PR. RECEIVING PIT

EXISTING SS MH
RIM:1113.61
INV IN: 1106.75 4"
INV IN: 1104.00 12"
INV OUT: 1103.93 12"

50' STREAM BUFFER

25' STREAM BUFFER

EX. 20' SEWER EASEMENT

EX. WETLANDS (APPROX.)

96" CMP IE:1107.85

96" CMP IE:1107.73

68°

EX. 12" SAN. SEWER

EX. WETLANDS (APPROX.)

EX. STREAM CENTERLINE

30' BUILDING SETBACK

25' STREAM BUFFER

PR. HORIZONTAL DIRECTIONAL DRILL ±130 LF 8" HDPE DR-11 (DIPS) WATER MAIN. PROVIDE RESTRAINED HDPExMJ TRANSITION COUPLINGS ON EITHER END TO CONTINUE PIPE MATERIAL AS DUCTILE.

(2) PERMANENT UTILITY EASEMENT

EX. UNDG. POWER

EX. FIBER OPTIC LINE

PARCEL ID: 08098 01009
KOSWIRE INC.
4600 CANTRELL ROAD
FLOWERY BRANCH, GA 30542
26.72 ACRES

8" RJ DI 90° BEND

PR. LAUNCHING PIT. CONTRACTOR SHALL REMOVE EX. TREES, SHRUBS, & VEGETATION AND PROVIDE REPLACEMENT OF ALL LANDSCAPING TO MATCH EXISTING.

PR. CONNECTION TO EX. WATER MAIN W/ 8"x6" RJ DI REDUCER, RJ DI BENDS, AND 6" TAPPING SLEEVE & VALVE

*LIMITS OF DISTURBANCE
0.86 AC (ON-SITE)
0.24 AC (OFF-SITE)
±1.10 AC (TOTAL)

EX. FIRE HYDRANT

TEMPORARY CONSTRUCTION (2) EASEMENT

PARCEL ID: 08098A000206
WATER STONE CROSSING COMMUNITY ASSOC INC
DEED BOOK 4310, PAGE 80
PLAT BOOK 816, PAGE 154A

PARCEL ID: 08098 A000206
WATER STONE CROSSING COMMUNITY ASSOCIATION
4611 BEACON RIDGE LANE
FLOWERY BRANCH, GA 30542
15.52 ACRES

EX. 6" WATER LINE

EX. IRRIGATION WATER LINE

EX. STONE FENCE POST (TYP.)

VIREO DR

10' BUILDING SETBACK

KEYED NOTE:

(1) PIPE INSTALLED BEYOND BACKFLOW VAULT TO BE PAID FOR VIA LINEAR FOOT LINE ITEMS - NOT TO BE INCLUDED UNDER LUMP SUM WELL SITE IMPROVEMENTS ITEM.

(2) NO WORK LOCATED ON PRIVATE PROPERTY WILL BE ALLOWED UNTIL EASEMENTS ARE OBTAINED. ALL WORK LOCATED OFF-SITE SHALL BE COORDINATED WITH THE RESPECTIVE PROPERTY OWNER TO MINIMIZE ANY DISRUPTIONS.

UTILITY NOTES:

1. THE CONTRACTOR SHALL PROVIDE 72 HOUR NOTICE TO THE UTILITIES PROTECTION CENTER PRIOR TO CONSTRUCTION COMMENCEMENT OR EXCAVATION. THE CONTRACTOR SHALL PROVIDE ADEQUATE PROTECTION FOR ALL EXISTING UTILITIES WITHIN THE CONSTRUCTION AREA AND REPAIR ANY UTILITIES DAMAGED DURING CONSTRUCTION AT NO COST TO THE OWNER.
2. THE CONTRACTOR SHALL FIELD VERIFY LOCATION AND SIZE OF ALL EXISTING UTILITIES WITHIN THE PROJECT AREA. THE CONTRACTOR SHALL COORDINATE WITH UTILITY OWNERS ON ALL CONFLICTS.
3. THE CONTRACTOR SHALL VERIFY ALL DIMENSIONS AND LOCATIONS OF PROPOSED UTILITIES AND COORDINATE WITH ALL APPLICABLE PLANS FOR THE PROJECT. THE CONTRACTOR SHALL BE RESPONSIBLE FOR PROPER PLACEMENT AND FIT OF ALL PROPOSED UTILITIES. IF ANY DISCREPANCIES ARE DISCOVERED, NOTIFY THE ENGINEER IN WRITING WITHIN 24 HOURS.
4. TEN (10') FOOT HORIZONTAL & EIGHTEEN (18") INCH VERTICAL SEPARATION SHALL BE MAINTAINED BETWEEN ALL PROPOSED POTABLE WATER MAINS AND SANITARY SEWER MAINS.
5. FOUR (4') FOOT MINIMUM COVER SHALL BE MAINTAINED ABOVE ALL PROPOSED WATER MAINS AND SERVICE CONNECTIONS.
6. ALL SANITARY SEWER CONSTRUCTION SHALL COMPLY WITH ALL LOCAL STANDARDS AND SPECIFICATIONS.
7. THE CONTRACTOR SHALL ADJUST THE TOPS OF ALL EXISTING AND PROPOSED UTILITY STRUCTURES TO MATCH FINAL GRADE ELEVATIONS.
8. SEE MEP DESIGN SHEETS FOR EXACT PLACEMENT OF SPECIFIED UTILITIES.
9. ALL PROPOSED WATER MAIN PIPE & FITTINGS SHALL HAVE RESTRAINED JOINTS AND HAVE CONC. THRUST BLOCKING INSTALLED.

GRAPHIC SCALE 1" = 20'

GEORGIA811 www.Georgia811.com

ESG ENGINEERING
6400 Peake Rd
Macon, GA 31210
Ph: (478) 474-4996
Fax: (478) 474-5045

GROUNDWATER WELLS #4 & #5

FOR THE
CITY OF FLOWERY BRANCH

REVISIONS NO.	DESCRIPTION	DATE
1	ESPC SHEETS	11-7-25
2	BID SET OF PLANS	12-1-25
3	REVISED WITH CITY COMMENTS	12-5-25
4	ADDENDUM #1	12-8-25
5	ADDENDUM #2	12-11-25
6	ADDENDUM #3	12-12-25
7	REVISED WITH CITY COMMENTS	12-17-25

CONFORMED SET

GEORGIA REGISTERED No. PE046341 PROFESSIONAL ENGINEER ANDREW D SWICEGOOD

DRAWN BY: DSC
CHECKED BY: ADS
DATE: OCT 2025
SCALE: SEE SCALE

CONTENT:

CIVIL:
UTILITY PLAN

SHEET NO: 2 3 5 6 7

C4.0

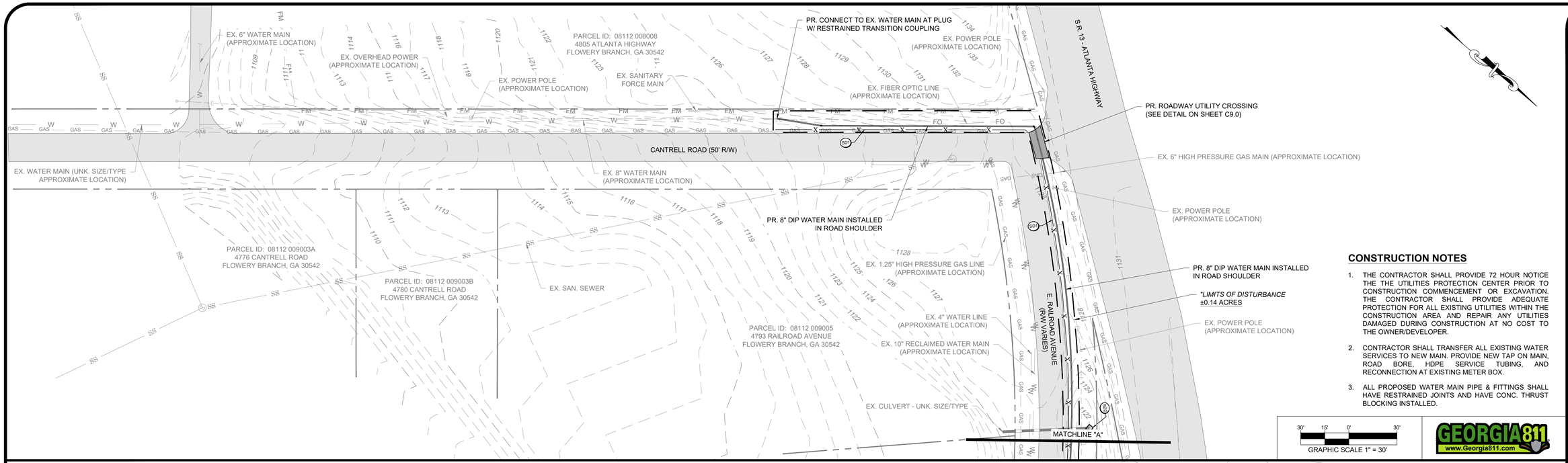

CONSTRUCTION NOTES

1. THE CONTRACTOR SHALL PROVIDE 72 HOUR NOTICE THE THE UTILITIES PROTECTION CENTER PRIOR TO CONSTRUCTION COMMENCEMENT OR EXCAVATION. THE CONTRACTOR SHALL PROVIDE ADEQUATE PROTECTION FOR ALL EXISTING UTILITIES WITHIN THE CONSTRUCTION AREA AND REPAIR ANY UTILITIES DAMAGED DURING CONSTRUCTION AT NO COST TO THE OWNER/DEVELOPER.
2. CONTRACTOR SHALL TRANSFER ALL EXISTING WATER SERVICES TO NEW MAIN. PROVIDE NEW TAP ON MAIN, ROAD BORE, HDPE SERVICE TUBING, AND RECONNECTION AT EXISTING METER BOX.
3. ALL PROPOSED WATER MAIN PIPE & FITTINGS SHALL HAVE RESTRAINED JOINTS AND HAVE CONC. THRUST BLOCKING INSTALLED.

GEORGIA811 www.Georgia811.com

*DISTURBED AREA CALCULATIONS:

PROJECT SITE: 2.14 AC
TOTAL DISTURBED AREA: 1.06 AC

DISTURBED AREA (OFF SITE): 0.14 AC
DISTURBED AREA (ON SITE): 0.92 AC
DISTURBED AREA = 0.92 AC / 2.14 AC = 43% OF PROJECT SITE
< 50% GOOD

IMPERVIOUS AREA = 1400 SF -> 0.032 AC / 1.06 AC = 3.0%

<50% GOOD
<15% GOOD

ESG ENGINEERING
6400 Peake Rd
Macon, GA 31210
Ph: (478) 474-4996
Fax: (478) 474-5045

GROUNDWATER WELLS #4 & #5

FOR THE
CITY OF FLOWERY BRANCH

REVISIONS

NO.	DESCRIPTION	DATE
1	ESPC SHEETS	11-7-25
2	BID SET OF PLANS	12-1-25
3	REVISED WITH CITY COMMENTS	12-5-25

CONFORMED SET

GEORGIA REGISTERED No. PE046341 PROFESSIONAL ENGINEER ANDREW D SWICEGOOD

DRAWN BY: DSC
CHECKED BY: ADS
DATE: OCT 2025
SCALE: SEE SCALE

CONTENT:

CIVIL:
WATER MAIN EXT.

SHEET NO: C4.1

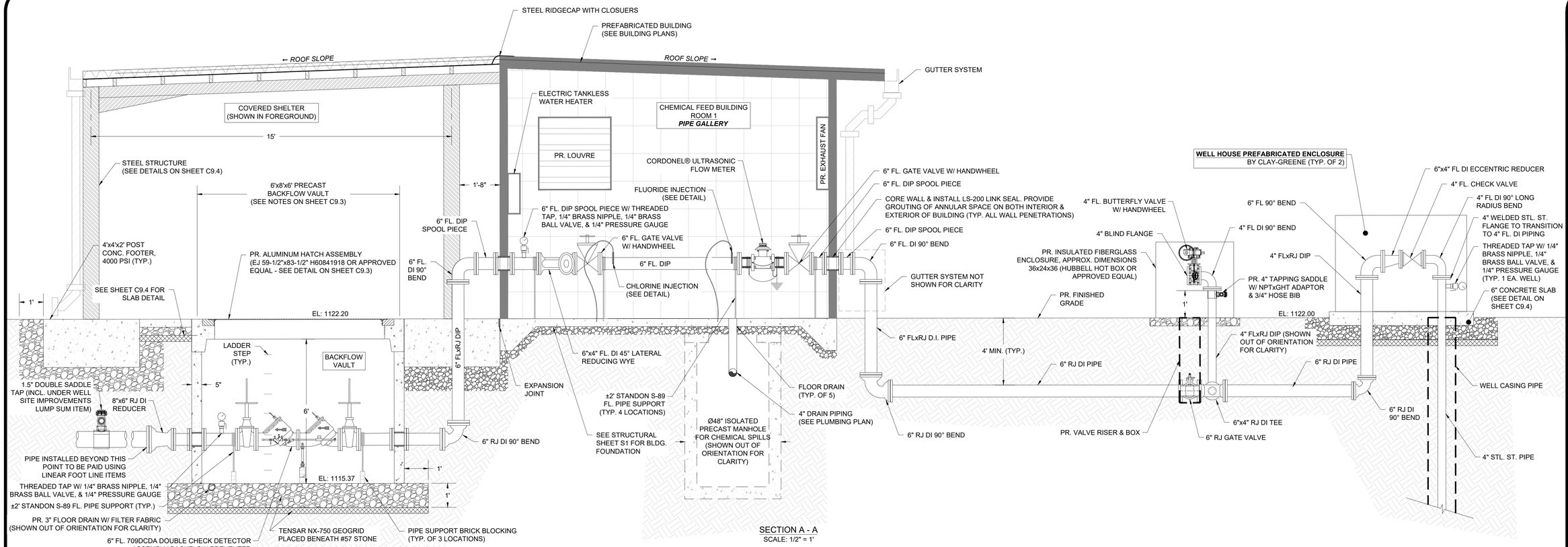

SECTION A - A
SCALE: 1/2" = 1'

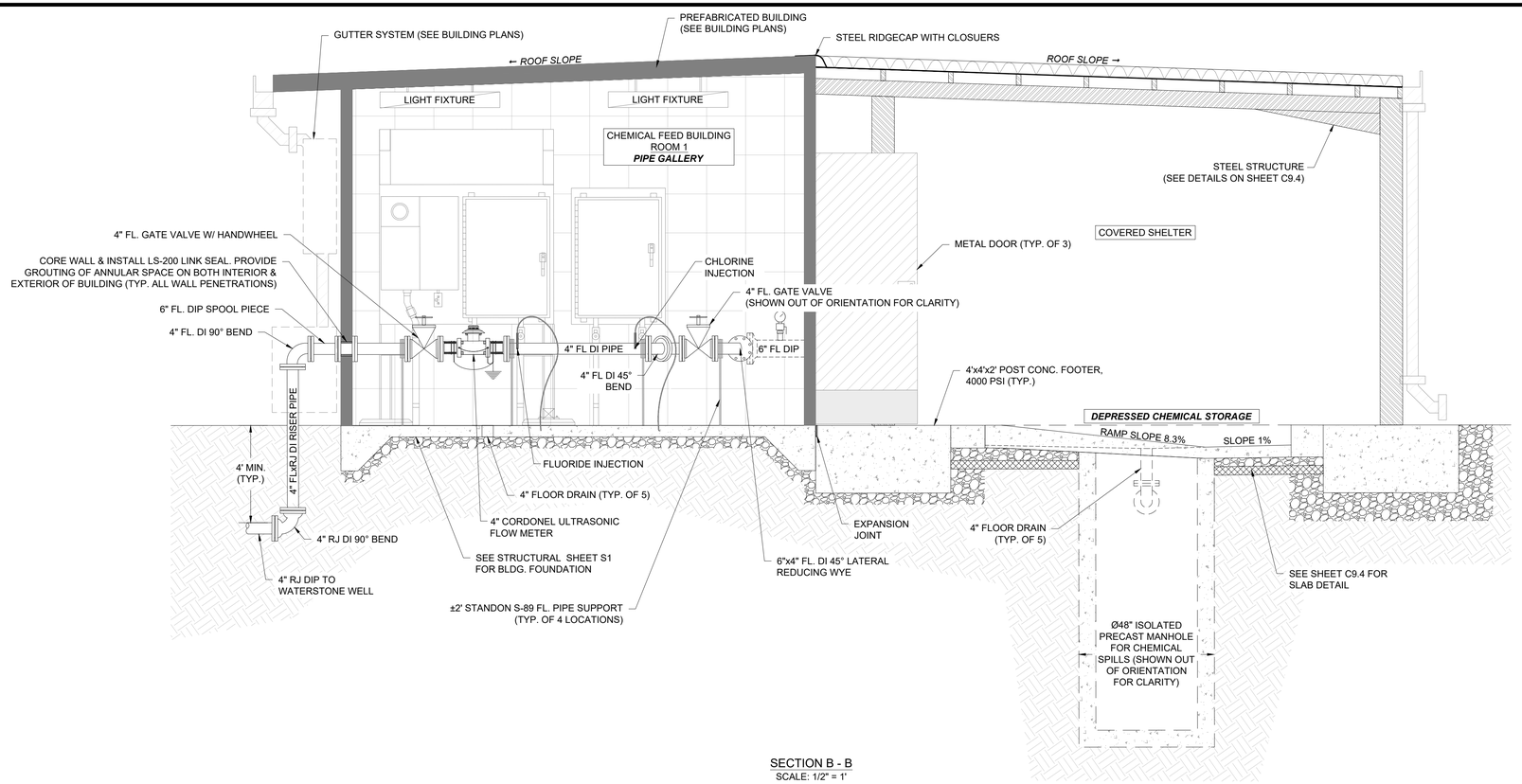

SECTION B - B
SCALE: 1/2" = 1'

ESG ENGINEERING
6400 Peake Rd
Macon, GA 31210
Ph: (478) 474-4996
Fax: (478) 474-5045

GROUNDWATER WELLS #4 & #5

FOR THE
CITY OF FLOWERY BRANCH

REVISIONS

NO.	DESCRIPTION	DATE
1	ESPC SHEETS	11-7-25
2	BID SET OF PLANS	12-1-25
3	REVISED WITH CITY COMMENTS	12-5-25

CONFORMED SET

GEORGIA REGISTERED No. PE046341 PROFESSIONAL ENGINEER ANDREW D SWICEGOOD

DRAWN BY: JDM
CHECKED BY: ADS
DATE: OCT 2025
SCALE: SEE SCALE

CONTENT:

CIVIL:
BUILDING ELEVATIONS

SHEET NO: 2 3

C5.0

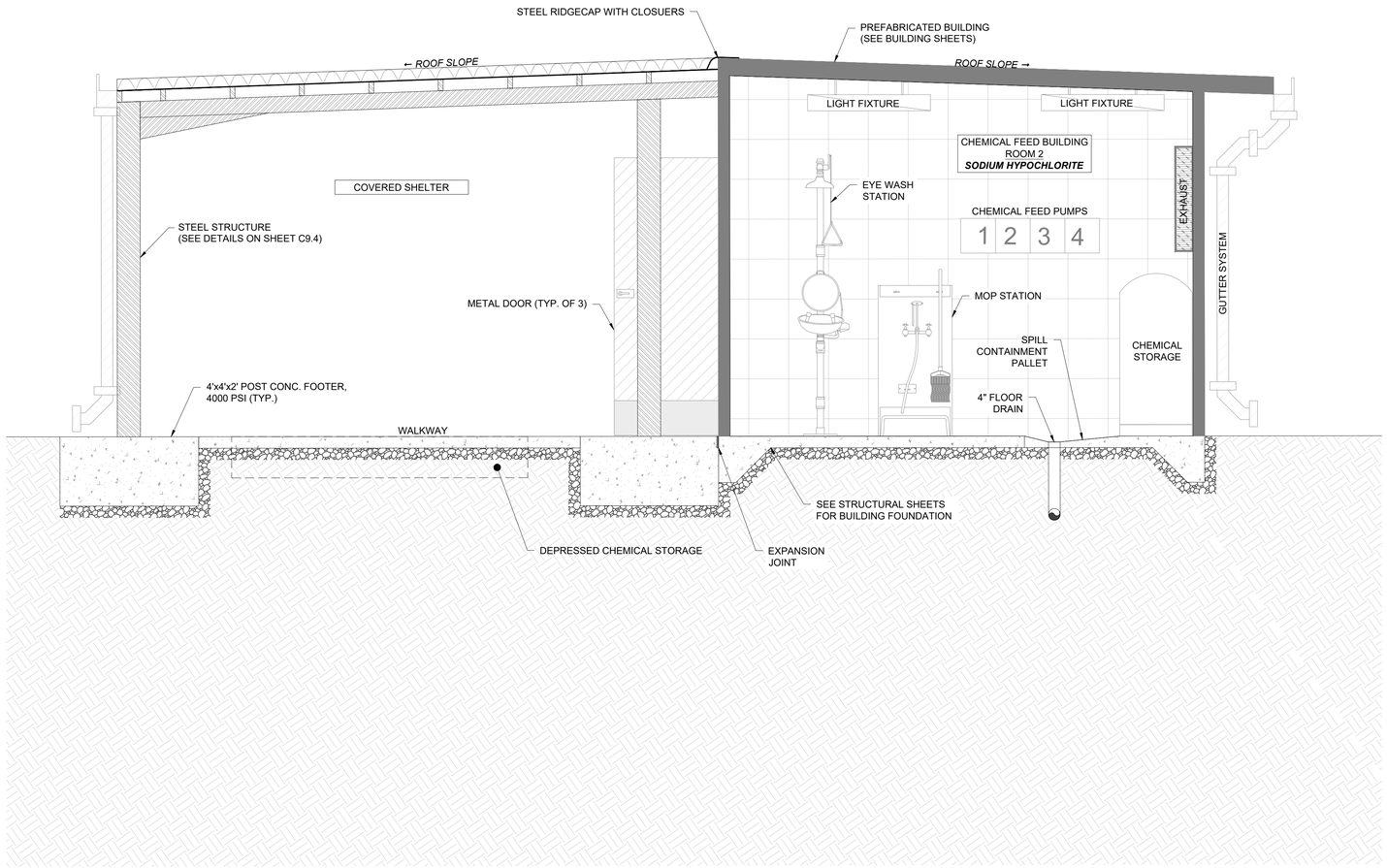

SECTION C - C
SCALE: 1/2" = 1'

ESG ENGINEERING
6400 Peake Rd
Macon, GA 31210
Ph: (478) 474-4996
Fax: (478) 474-5045

GROUNDWATER WELLS #4 & #5

FOR THE
CITY OF FLOWERY BRANCH

REVISIONS

NO.	DESCRIPTION	DATE
1	ESPC SHEETS	11-7-25
2	REVISED WITH CITY COMMENTS	12-1-25

CONFORMED SET

GEORGIA REGISTERED No. PE046341 PROFESSIONAL ENGINEER ANDREW D SWICEGOOD

DRAWN BY: JDM
CHECKED BY: ADS
DATE: OCT 2025
SCALE: SEE SCALE

CONTENT:

CIVIL:
BUILDING ELEVATIONS

SHEET NO:

C5.1

Last Saved By: Eleonard
Plotted: 12/2/2025 9:19 AM
Drawing Path: Z:\Engineer Projects\F0002 - FLOWERY BRANCH, CITY OF\Fxxxx.xxx Groundwater Well Restoration\Base\CAD\C5 Profiles.dwg

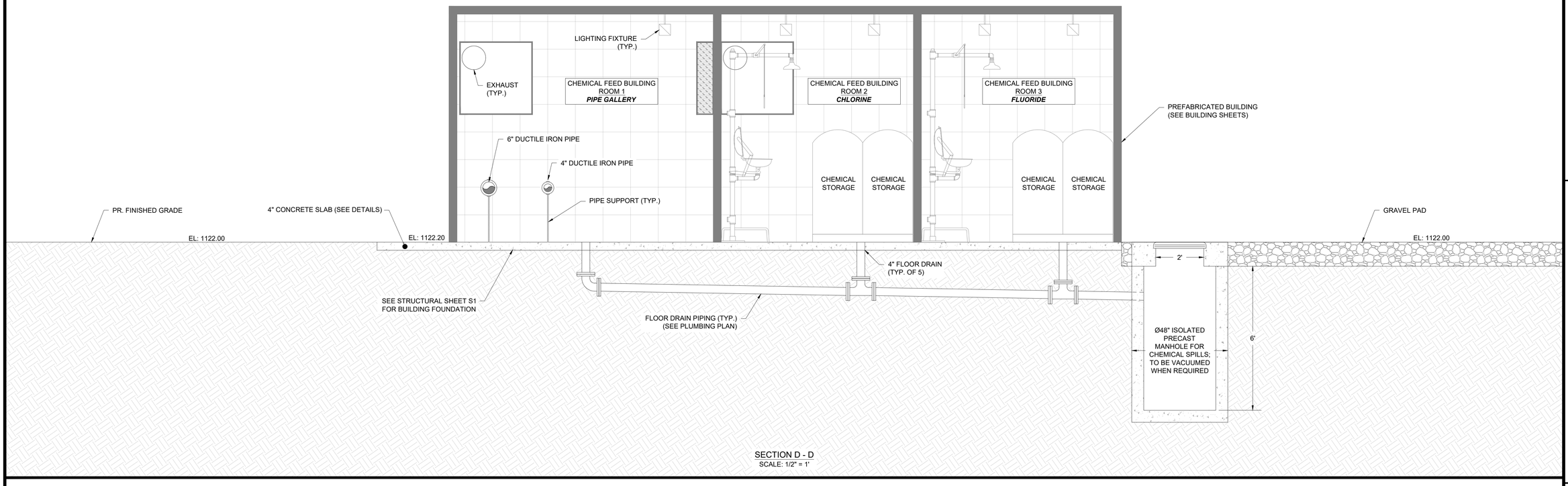

SECTION D - D
SCALE: 1/2" = 1'

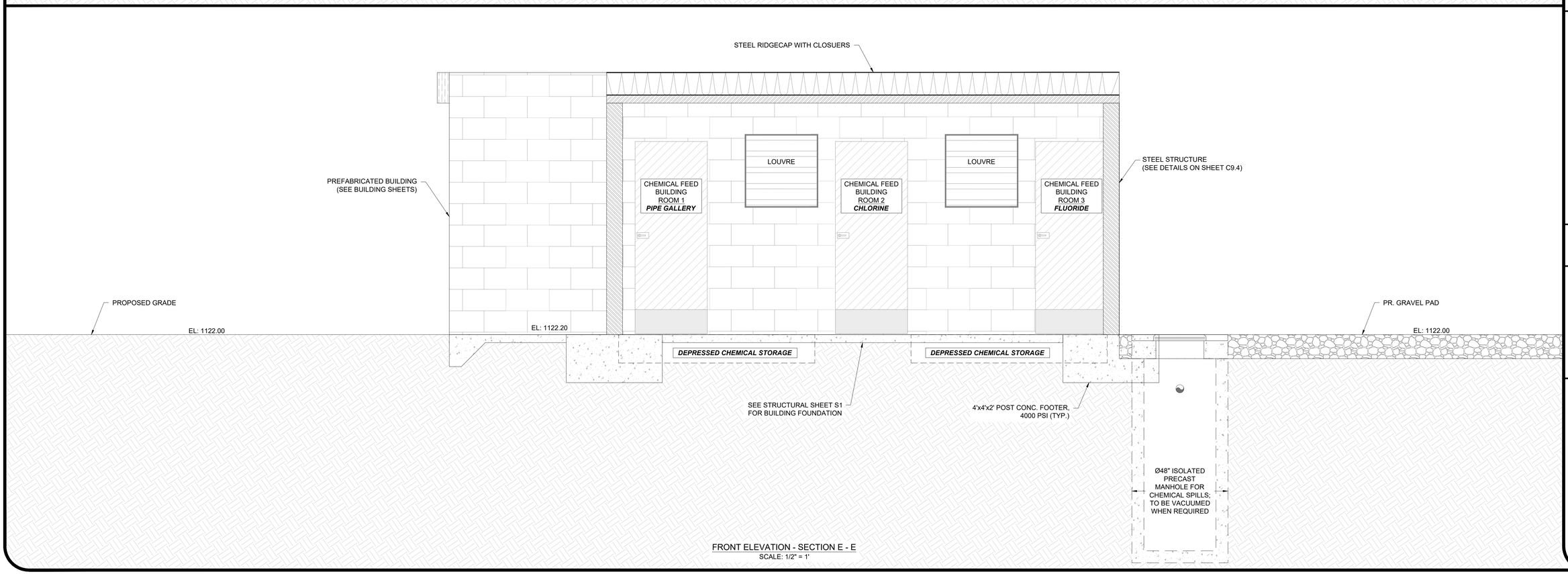

FRONT ELEVATION - SECTION E - E
SCALE: 1/2" = 1'

ESG ENGINEERING
6400 Peake Rd
Macon, GA 31210
Ph: (478) 474-4996
Fax: (478) 474-5045

GROUNDWATER WELLS #4 & #5

FOR THE
CITY OF FLOWERY BRANCH

REVISIONS

NO.	DESCRIPTION	DATE
1	ESPC SHEETS	11-7-25
2	BID SET OF PLANS	12-1-25
3	REVISED WITH CITY COMMENTS	12-5-25
4	ADDENDUM #1	12-8-25

CONFORMED SET

GEORGIA REGISTERED No. PE046341 PROFESSIONAL ENGINEER ANDREW D SWICEGOOD

DRAWN BY: JDM
CHECKED BY: ADS
DATE: OCT 2025
SCALE: SEE SCALE

CONTENT:

CIVIL:
BUILDING ELEVATIONS

SHEET NO: 4

C5.2

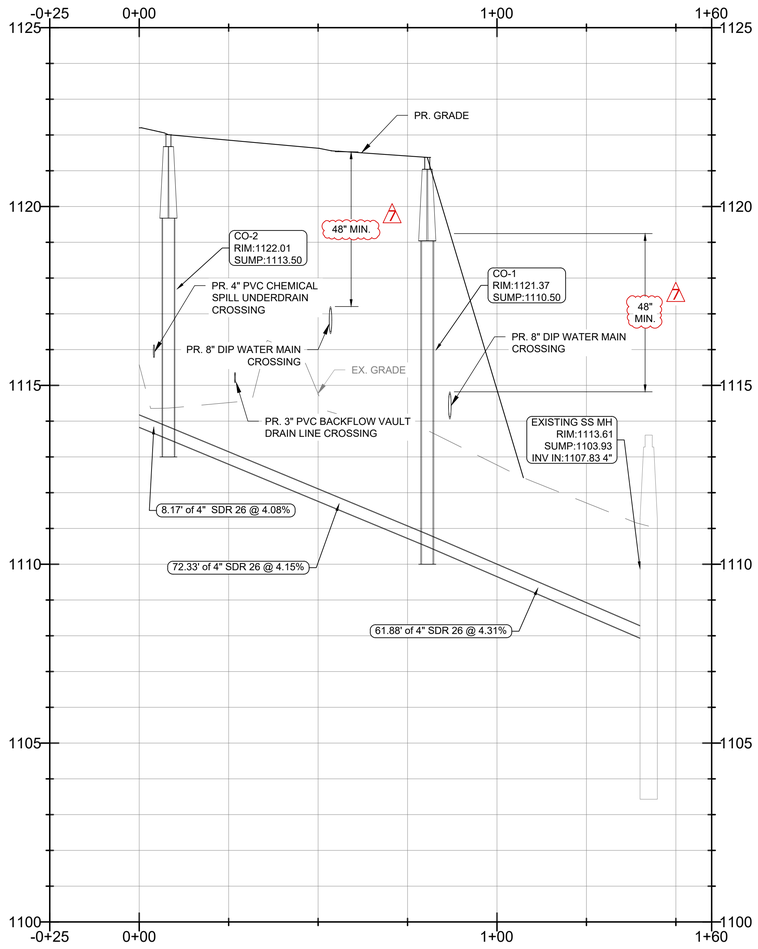

SANITARY SEWER ALIGNMENT

ESG ENGINEERING
6400 Peake Rd
Macon, GA 31210
Ph: (478) 474-4996
Fax: (478) 474-5045

GROUNDWATER WELLS #4 & #5

FOR THE
CITY OF FLOWERY BRANCH

REVISIONS

NO	DESCRIPTION	DATE
1	ESPC SHEETS	11-7-25
2	BID SET OF PLANS	12-1-25
3	REVISED WITH CITY COMMENTS	12-5-25
4	ADDENDUM #1	12-8-25
5	ADDENDUM #2	12-11-25
6	ADDENDUM #3	12-12-25
7	REVISED WITH CITY COMMENTS	12-17-25

CONFORMED SET

GEORGIA REGISTERED No. PE046341 PROFESSIONAL ENGINEER ANDREW D SWICEGOOD

DRAWN BY: DSC
CHECKED BY: ADS
DATE: OCT 2025
SCALE: H: 1" = 20'
V: 1" = 2'

CONTENT:

CIVIL:
SANITARY SEWER PROFILE

SHEET NO: 2 3 7

C5.3

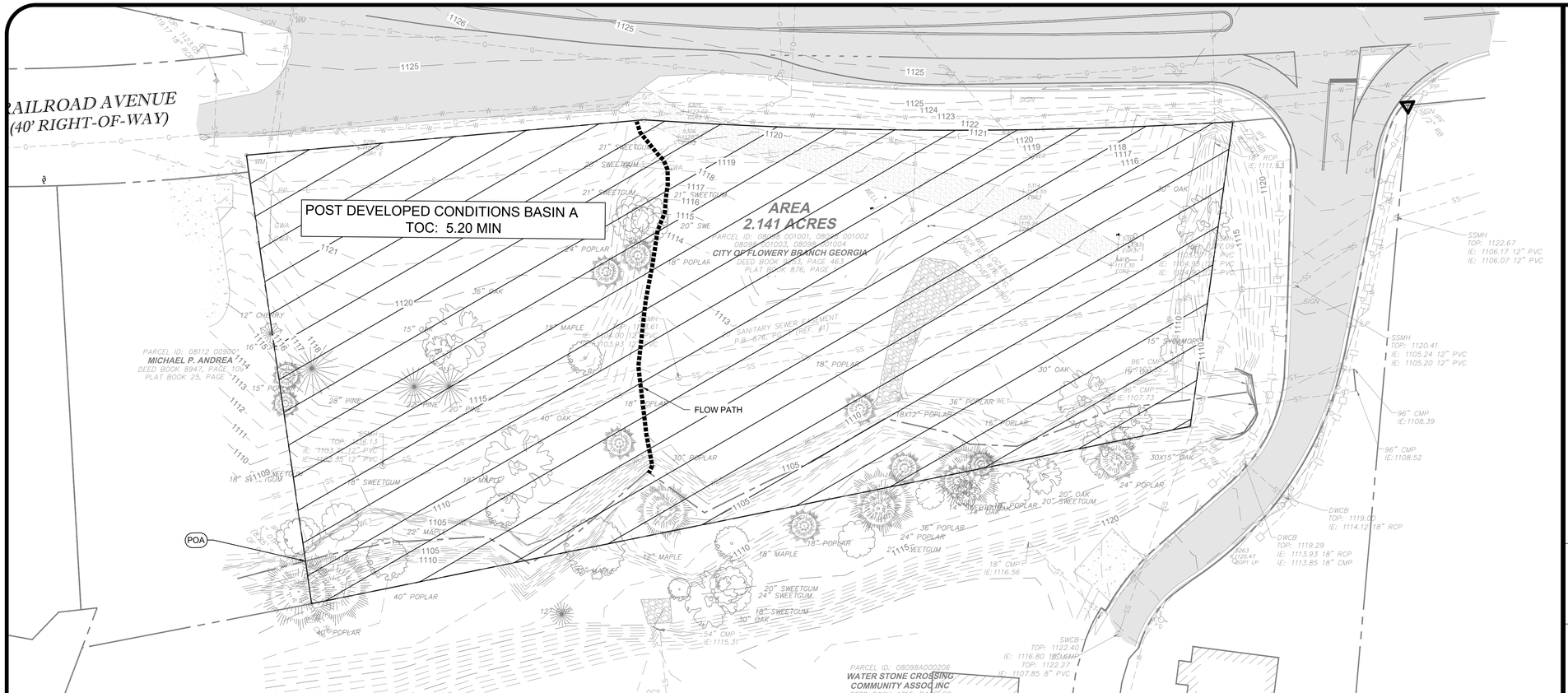

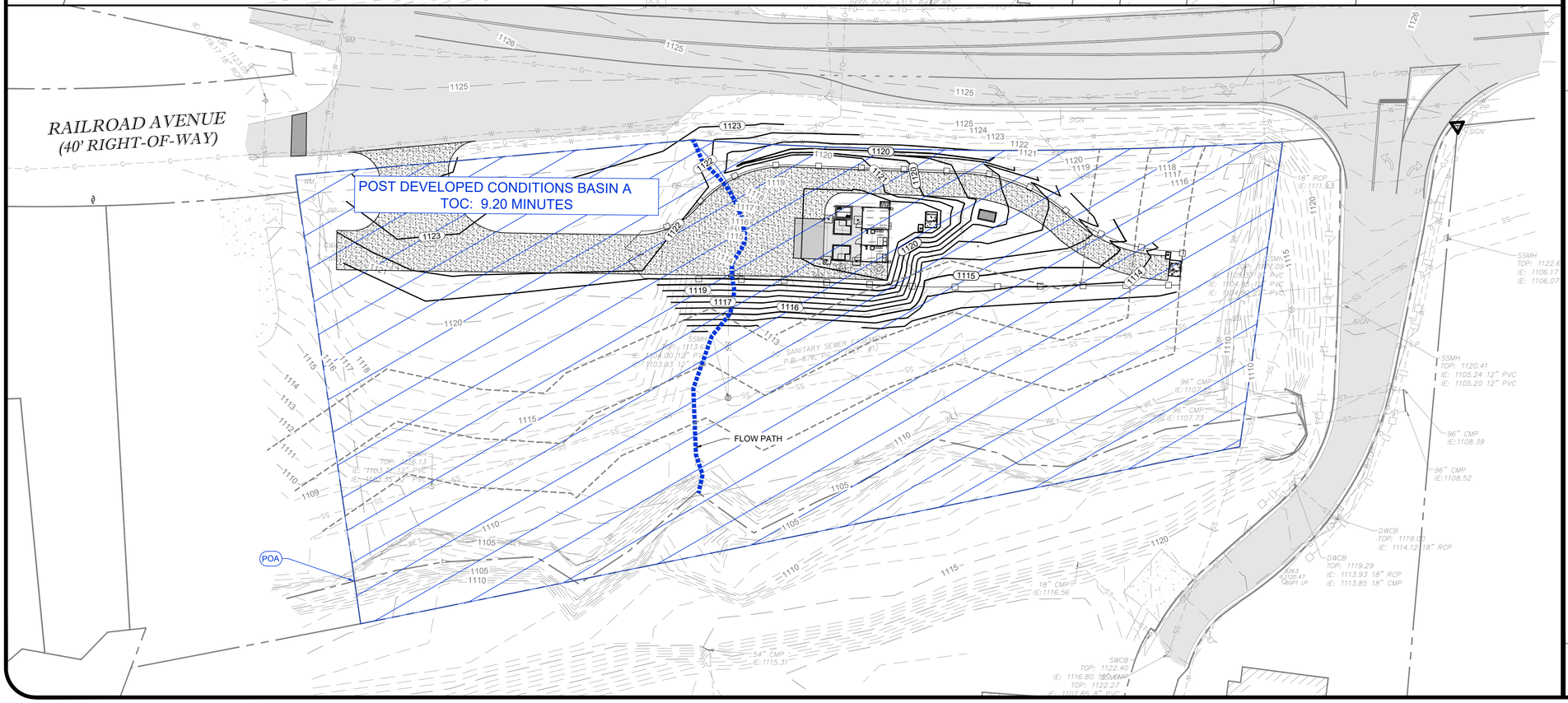

SITE INFORMATION

PROJECT ADDRESS	4745 ATLANTA HWY
PARCEL NUMBER	08098 001001 THRU 08098 001004
PARCEL ZONING	H-B
PROJECT AREA	2.14 ACRES
BUILDING SETBACK	
FRONT	NONE
REAR	30'
SIDE	10'
LANDSCAPE SETBACK	
FRONT	10'
REAR	30'
SIDE	NONE

SITE DRAINAGE DESCRIPTION:

THE PROPOSED DEVELOPMENT FOR THE CITY OF FLOWERY BRANCH, GEORGIA IS LOCATED AT 4745 ATLANTA HIGHWAY (SR13). THE PROJECT AREA CONSISTS OF 2.14 ACRES OF OPEN AREA. THE PRE-DEVELOPED CONDITION CONSIST OF ONE DRAINAGE BASIN. BASIN A SHEET FLOWS TOWARDS THE SOUTH AND DISCHARGES ALONG THE SOUTH PROPERTY LINE INTO THE CREEK. THE PROPOSED DEVELOPMENT WILL CONSIST OF ±1600 SQFT OF COVERED OUTDOOR SPACE AND WELL HOUSE BUILDING FOR THE REHABILITATION OF TWO WELLS PURCHASED BY FLOWERY BRANCH FROM THE STATE OF GEORGIA. THE WELL HOUSE BUILDING IS A THREE ROOM STRUCTURE WITH AN ATTACHED POLE BARN. THE WELL HOUSE BUILDING IS THREE SEPARATE ROOMS; ONE PIPE GALLERY AND THE REMAINING ROOMS SEPARATE CHEMICAL FEED ROOMS. A SMALL PORTION OF THE PROPERTY WILL HAVE ASPHALT FOR LOADING/UNLOADING. TWO SMALL CONCRETE BASINS WILL SUPPORT CHEMICAL STORAGE. THIS STRUCTURE IS UTILITARIAN IN NATURE. THE POST-DEVELOPED CONDITIONS CONSIST OF ONE DRAINAGE BASIN. BASIN "A" CONTINUES TO SHEET FLOW IN THE SAME PATTERN AS BEFORE BUT WITH A SLOWER RELEASE DO TO SUBTLER GRADE CHANGES ACROSS THE SITE. IT DRAINS TO THE SOUTH OF THE PROPERTY AND ENTERS THE CREEK IN THE SAME FASHION. THE POST DEVELOPED PROPERTY CONDITIONS REDUCES STORMWATER RUNOFF AS REQUIRED BY LOCAL AND/OR STATE STANDARDS AND REGULATIONS.

FLOODPLAIN DESCRIPTION:

THE PROPERTY SHOWN HEREON IS LOCATED IN FLOOD ZONE "X" AS PER FLOOD INSURANCE RATE MAP FOR CITY OF FLOWERY BRANCH 130408, AND SHOWN ON MAP NO. 13293C0089D. WITH AN EFFECTIVE DATE OF 09/25/2009. FLOOD ZONE "X" DENOTES AN AREA OF MINIMAL FLOOD HAZARD.

HYDROLOGIC BASIN DESCRIPTION:

PRE-DEVELOPED BASIN
BASIN A: 2.14 ACRES (69) - T_C: 5.20 MINS 25-YR PEAK RUNOFF: 9.93 CFS
IMPERVIOUS AREA: 0.00 AC (HSG-B)
OPEN AREA (GOOD CONDITION): 2.14 AC (HSG-B)
WOODED AREA (GOOD COVER): 0.00 AC (HSG-B)

POST-DEVELOPED BASIN
BASIN A TO STORM SYSTEM 2.14 ACRES (61) - T_C: 9.20 MINS 25-YR PEAK RUNOFF: 6.84 CFS
IMPERVIOUS AREA: 0.04 AC (HSG-B)
OPEN AREA (GOOD CONDITION): 2.10 AC (HSG-B)
WOODED AREA (GOOD COVER): 0.00 AC (HSG-B)

DISTURBED AREA NOTES

1. THE TOTAL PROJECT SITE IS 2.14 ACRES.
2. THE TOTAL ON-SITE DISTURBED AREA IS 0.92 ACRES (WELL SITE PROJECT).
3. THE TOTAL OFF-SITE DISTURBED AREA IS 0.14 ACRES (WATER MAIN EXTENSION.
4. THE TOTAL PROJECT DISTURBED AREA (INCLUDING ON- AND OFF-SITE AREAS) IS 1.06 ACRES.
5. DUE TO THE PROP. ESC MEASURES AND TYPE OF CONSTRUCTION BEING LINEAR, SHALLOW TRENCHING WORK, THE 0.14 ACRES OF "OFF-SITE" AREA IS NOT BEING CONSIDERED AS PART OF THE ON-SITE HYDROLOGY ANALYSIS DUE TO THE INFINITE NUMBER OF FLOW PATHS FOR RUNOFF LEAVING THIS AREA OF THE PROJECT. THEREFORE, THE TRUE "ON-SITE" DISTURBED AREA IS ONLY 0.92 ACRES AND DOES NOT REQUIRE WATER QUALITY MITIGATION MEASURES.

GRAPHIC SCALE 1" = 30'

ESG ENGINEERING
6400 Peake Rd
Macon, GA 31210
Ph: (478) 474-4996
Fax: (478) 474-5045

GROUNDWATER WELLS #4 & #5

FOR THE
CITY OF FLOWERY BRANCH

REVISIONS

NO.	DESCRIPTION	DATE
1	ESPC SHEETS	11-7-25
2	BID SET OF PLANS	12-1-25
3	REVISED WITH CITY COMMENTS	12-5-25

CONFORMED SET

GEORGIA REGISTERED No. PE046341 PROFESSIONAL ENGINEER ANDREW D SWICEGOOD

DRAWN BY: DSC
CHECKED BY: ADS
DATE: OCT 2025
SCALE: SEE SCALE

CONTENT:
CIVIL:
HYDROLOGY PLAN

SHEET NO: 4
C6.0

GEORGIA811 www.Georgia811.com

GENERAL NPDES PERMIT NO. GAR100001

30 A) PERMITTEE REQUIREMENTS.

(1). EACH DAY WHEN ANY TYPE OF CONSTRUCTION ACTIVITY HAS TAKEN PLACE AT A PRIMARY PERMITTEE'S SITE, CERTIFIED PERSONNEL PROVIDED BY THE PRIMARY PERMITTEE SHALL INSPECT: (A) ALL AREAS AT THE PRIMARY PERMITTEE'S SITE WHERE PETROLEUM PRODUCTS ARE STORED, USED, OR HANDLED FOR SPILLS AND LEAKS FROM VEHICLES AND EQUIPMENT AND (B) ALL LOCATIONS AT THE PRIMARY PERMITTEE'S SITE WHERE VEHICLES ENTER OR EXIT THE SITE FOR EVIDENCE OF OFF-SITE SEDIMENT TRACKING. THESE INSPECTIONS MUST BE CONDUCTED UNTIL A NOTICE OF TERMINATION IS SUBMITTED.

(2). MEASURE AND RECORD RAINFALL WITHIN DISTURBED AREAS OF THE SITE THAT HAVE NOT MET FINAL STABILIZATION ONCE EVERY 24 HOURS EXCEPT ANY NON-WORKING SATURDAY, NON-WORKING SUNDAY AND NON-WORKING FEDERAL HOLIDAY. THE DATA COLLECTED FOR THE PURPOSE OF COMPLIANCE WITH THIS PERMIT SHALL BE REPRESENTATIVE OF THE MONITORED ACTIVITY. MEASUREMENT OF RAINFALL MAY BE SUSPENDED IF ALL AREAS OF THE SITE HAVE UNDERGONE FINAL STABILIZATION OR ESTABLISHED A CROP OF ANNUAL VEGETATION AND A SEEDING OF TARGET PERENNIALS APPROPRIATE FOR THE REGION.

(3). CERTIFIED PERSONNEL (PROVIDED BY THE PRIMARY PERMITTEE) SHALL INSPECT THE FOLLOWING AT LEAST ONCE EVERY SEVEN (7) CALENDAR DAYS AND WITHIN 24 HOURS OF THE END OF A STORM THAT IS 0.5 INCHES RAINFALL OR GREATER (UNLESS SUCH STORM ENDS AFTER 5:00 PM ON ANY FRIDAY OR ON ANY NON-WORKING SATURDAY, NON-WORKING SUNDAY OR ANY NON-WORKING FEDERAL HOLIDAY IN WHICH CASE THE INSPECTION SHALL BE COMPLETED BY THE END OF THE NEXT BUSINESS DAY AND/OR WORKING DAY, WHICHEVER OCCURS FIRST): (A) DISTURBED AREAS OF THE PRIMARY PERMITTEE'S CONSTRUCTION SITE; (B) AREAS USED BY THE PRIMARY PERMITTEE FOR STORAGE OF MATERIALS THAT ARE EXPOSED TO PRECIPITATION; AND (C) STRUCTURALCONTROL MEASURES. EROSION AND SEDIMENT CONTROL MEASURES IDENTIFIED IN THE PLAN APPLICABLE TO THE PRIMARY PERMITTEE'S SITE SHALL BE OBSERVED TO ENSURE THAT THEY ARE OPERATING CORRECTLY. WHERE DISCHARGE LOCATIONS OR POINTS ARE ACCESSIBLE, THEY SHALL BE INSPECTED TO ASCERTAIN WHETHER EROSION CONTROL MEASURES ARE EFFECTIVE IN PREVENTING SIGNIFICANT IMPACTS TO RECEIVING WATER(S). FOR AREAS OF A SITE THAT HAVE UNDERGONE FINAL STABILIZATION OR ESTABLISHED A CROP OF ANNUAL VEGETATION AND A SEEDING OF TARGET PERENNIALS APPROPRIATE FOR THE REGION, THE PERMITTEE MUST COMPLY WITH PART IV.D.4.A.(4). THESE INSPECTIONS MUST BE CONDUCTED UNTIL A NOTICE OF TERMINATION IS SUBMITTED.

(4). CERTIFIED PERSONNEL (PROVIDED BY THE PRIMARY PERMITTEE) SHALL INSPECT AT LEAST ONCE PER MONTH DURING THE TERM OF THIS PERMIT (I.E., UNTIL A NOTICE OF TERMINATION HAS BEEN SUBMITTED) THE AREAS OF THE SITE THAT HAVE UNDERGONE FINAL STABILIZATION OR ESTABLISHED A CROP OF ANNUAL VEGETATION AND A SEEDING OF TARGET PERENNIALS APPROPRIATE FOR THE REGION. THESE AREAS SHALL BE INSPECTED FOR EVIDENCE OF, OR THE POTENTIAL FOR, POLLUTANTS ENTERING THE DRAINAGE SYSTEM AND THE RECEIVING WATER(S). EROSION AND SEDIMENT CONTROL MEASURES IDENTIFIED IN THE PLAN SHALL BE OBSERVED TO ENSURE THAT THEY ARE OPERATING CORRECTLY. WHERE DISCHARGE LOCATIONS OR POINTS ARE ACCESSIBLE, THEY SHALL BE INSPECTED TO ASCERTAIN WHETHER EROSION CONTROL MEASURES ARE EFFECTIVE IN PREVENTING SIGNIFICANT IMPACTS TO RECEIVING WATER(S).

(5). BASED ON THE RESULTS OF EACH INSPECTION, THE SITE DESCRIPTION AND THE POLLUTION PREVENTION AND CONTROL MEASURES IDENTIFIED IN THE EROSION, SEDIMENTATION AND POLLUTION CONTROL PLAN, THE PLAN SHALL BE REVISED AS APPROPRIATE NOT LATER THAN SEVEN (7) CALENDAR DAYS FOLLOWING EACH INSPECTION. IMPLEMENTATION OF SUCH CHANGES SHALL BE MADE AS SOON AS PRACTICAL BUT IN NO CASE LATER THAN SEVEN (7) CALENDAR DAYS FOLLOWING EACH INSPECTION.

(6). A REPORT OF EACH INSPECTION THAT INCLUDES THE NAME(S) OF CERTIFIED PERSONNEL MAKING EACH INSPECTION, THE DATE(S) OF EACH INSPECTION, CONSTRUCTION PHASE (I.E., INITIAL, INTERMEDIATE OR FINAL), MAJOR OBSERVATIONS RELATING TO THE IMPLEMENTATION OF THE EROSION, SEDIMENTATION AND POLLUTION CONTROL PLAN, AND ACTIONS TAKEN IN ACCORDANCE WITH PART IV.D.4.A.(5). OF THE PERMIT SHALL BE MADE AND RETAINED AT THE SITE OR BE READILY AVAILABLE AT A DESIGNATED ALTERNATE LOCATION UNTIL THE ENTIRE SITE OR THAT PORTION OF A CONSTRUCTION SITE THAT HAS BEEN PHASED HAS UNDERGONE FINAL STABILIZATION AND A NOTICE OF TERMINATION IS SUBMITTED TO EPD. SUCH REPORTS SHALL BE READILY AVAILABLE BY END OF THE SECOND BUSINESS DAY AND/OR WORKING DAY AND SHALL IDENTIFY ALL INCIDENTS OF BEST MANAGEMENT PRACTICES THAT HAVE NOT BEEN PROPERLY INSTALLED AND/OR MAINTAINED AS DESCRIBED IN THE PLAN. WHERE THE REPORT DOES NOT IDENTIFY ANY INCIDENTS, THE INSPECTION REPORT SHALL CONTAIN A CERTIFICATION THAT THE BEST MANAGEMENT PRACTICES ARE IN COMPLIANCE WITH THE EROSION, SEDIMENTATION AND POLLUTION CONTROL PLAN. THE REPORT SHALL BE SIGNED IN ACCORDANCE WITH PART V.G.2. OF THIS PERMIT.

5. MAINTENANCE. THE PLAN SHALL INCLUDE A DESCRIPTION OF PROCEDURES TO ENSURE THE TIMELY MAINTENANCE OF VEGETATION, EROSION AND SEDIMENT CONTROL MEASURES AND OTHER PROTECTIVE MEASURES IDENTIFIED IN THE SITE PLAN.

33 6. SAMPLING REQUIREMENTS. THIS PERMIT REQUIRES THE MONITORING OF NEPHELOMETRIC TURBIDITY IN RECEIVING WATER(S) OR OUTFALLS IN ACCORDANCE WITH THIS PERMIT. THIS PARAGRAPH SHALL NOT APPLY TO ANY LAND DISTURBANCE ASSOCIATED WITH THE CONSTRUCTION OF SINGLE-FAMILY HOMES WHICH ARE NOT PART OF A SUBDIVISION OR PLANNED COMMON DEVELOPMENT UNLESS FIVE (5) ACRES OR MORE WILL BE DISTURBED. THE FOLLOWING PROCEDURES CONSTITUTE EPD'S GUIDELINES FOR SAMPLING TURBIDITY.

a. SAMPLING REQUIREMENTS SHALL INCLUDE THE FOLLOWING:

(1). A USGS TOPOGRAPHIC MAP, A TOPOGRAPHIC MAP OR A DRAWING (REFERRED TO AS A TOPOGRAPHIC MAP) THAT IS A SCALE EQUAL TO OR MORE DETAILED THAN A 1:24000 MAP SHOWING THE LOCATION OF THE SITE OR THE STAND ALONE CONSTRUCTION; (A) THE LOCATION OF ALL PERENNIAL AND INTERMITTENT STREAMS AND OTHER WATER BODIES AS SHOWN ON A USGS TOPOGRAPHIC MAP, AND ALL OTHER PERENNIAL AND INTERMITTENT STREAMS AND OTHER WATER BODIES LOCATED DURING MANDATORY FIELD VERIFICATION, INTO WHICH THE STORMWATER IS DISCHARGED AND (B) THE RECEIVING WATER AND/OR OUTFALL SAMPLING LOCATIONS. WHEN THE PERMITTEE HAS CHOSEN TO USE A USGS TOPOGRAPHIC MAP AND THE RECEIVING WATER(S) IS NOT SHOWN ON THE USGS TOPOGRAPHIC MAP, THE LOCATION OF THERECEIVING WATER(S) MUST BE HAND-DRAWN ON THE USGS TOPOGRAPHIC MAP FROM WHERE THE STORMWATER(S) ENTERS THE RECEIVING WATER(S) TO THE POINT WHERE THE RECEIVING WATER(S) COMBINES WITH THE FIRST BLUE LINE STREAM SHOWN ON THE USGSTOPOGRAPHIC MAP;

(2). A WRITTEN NARRATIVE OF SITE SPECIFIC ANALYTICAL METHODS USED TO COLLECT, HANDLE AND ANALYZE THE SAMPLES INCLUDING QUALITY CONTROL/QUALITY ASSURANCE PROCEDURES. THIS NARRATIVE MUST INCLUDE PRECISE SAMPLING METHODOLOGY FOR EACH SAMPLING LOCATION;

(3). WHEN THE PERMITTEE HAS DETERMINED THAT SOME OR ALL OUTFALLS WILL BE SAMPLED, A RATIONALE MUST BE INCLUDED ON THE PLAN FOR THE NTU LIMIT(S) SELECTED FROM APPENDIX B. THIS RATIONALE MUST INCLUDE THE SIZE OF THE CONSTRUCTION SITE, THE CALCULATION OF THE SIZE OF THE SURFACE WATER DRAINAGE AREA, AND THE TYPE OF RECEIVING WATER(S) (I.E., TROUT STREAM OR SUPPORTING WARM WATER FISHERIES); AND

(4). ANY ADDITIONAL INFORMATION EPD DETERMINES NECESSARY TO BE PART OF THE PLAN. EPD WILL PROVIDE WRITTEN NOTICE TO THE PERMITTEE OF THE INFORMATION NECESSARY AND THE TIME LINE FOR SUBMITTAL.

b. SAMPLE TYPE. ALL SAMPLING SHALL BE COLLECTED BY "GRAB SAMPLES" AND THE ANALYSIS OF THESE SAMPLES MUST BE CONDUCTED IN ACCORDANCE WITH METHODOLOGY AND TEST PROCEDURES ESTABLISHED BY 40 CFR PART 136 (UNLESS OTHER TEST PROCEDURES HAVE BEEN APPROVED); THE GUIDANCE DOCUMENT TITLED "NPDES STORM WATER SAMPLING GUIDANCE DOCUMENT,EPA 833-B-92-001" AND GUIDANCE DOCUMENTS THAT MAY BE PREPARED BY THE EPD.

(1). SAMPLE CONTAINERS SHOULD BE LABELED PRIOR TO COLLECTING THE SAMPLES.

(2). SAMPLES SHOULD BE WELL MIXED BEFORE TRANSFERRING TO A SECONDARY CONTAINER.

(3). LARGE MOUTH, WELL CLEANED AND RINSED GLASS OR PLASTIC JARS SHOULD BE USED FOR COLLECTING SAMPLES. THE JARS SHOULD BE CLEANED THOROUGHLY TO AVOID CONTAMINATION.

(4). MANUAL, AUTOMATIC OR RISING STAGE SAMPLING MAY BE UTILIZED. SAMPLES REQUIRED BY THIS PERMIT SHOULD BE ANALYZED IMMEDIATELY, BUT IN NO CASE LATER THAN 48 HOURS AFTER COLLECTION. HOWEVER, SAMPLES FROM AUTOMATIC SAMPLERS MUST BE COLLECTED NO LATER THAN THE NEXT BUSINESS DAY AFTER THEIR ACCUMULATION, UNLESS FLOW THROUGH AUTOMATED ANALYSIS IS UTILIZED. IF AUTOMATIC SAMPLING IS UTILIZED AND THE AUTOMATIC SAMPLER IS NOT ACTIVATED DURING THE QUALIFYING EVENT, THE PERMITTEE MUST UTILIZE MANUAL SAMPLING OR RISING STAGE SAMPLING DURING THE NEXT QUALIFYING EVENT. DILUTION OF SAMPLES IS NOT REQUIRED. SAMPLES MAY BE ANALYZED DIRECTLY WITH A PROPERLY CALIBRATED TURBIDIMETER. SAMPLES ARE NOT REQUIRED TO BE COOLED.

(5). SAMPLING AND ANALYSIS OF THE RECEIVING WATER(S) OR OUTFALLS BEYOND THE MINIMUM FREQUENCY STATED IN THIS PERMIT MUST BE REPORTED TO EPD AS SPECIFIED IN PART IV.E.

c. SAMPLING POINTS.

(1). FOR CONSTRUCTION ACTIVITIES THE PRIMARY PERMITTEE MUST SAMPLE ALL RECEIVING WATER(S), OR ALL OUTFALL(S), OR A COMBINATION OF RECEIVING WATER(S) AND OUTFALL(S). SAMPLES TAKEN FOR THE PURPOSE OF COMPLIANCE WITH THIS PERMIT SHALL BE REPRESENTATIVE OF THE MONITORED ACTIVITY AND REPRESENTATIVE OF THE WATER QUALITY OF THE RECEIVING WATER(S) AND/OR THE STORMWATER OUTFALLS USING THE FOLLOWING MINIMUM GUIDELINES:

(A). THE UPSTREAM SAMPLE FOR EACH RECEIVING WATER(S) MUST BE TAKEN IMMEDIATELY UPSTREAM OF THE CONFLUENCE OF THE FIRST STORMWATER DISCHARGE FROM THE PERMITTED ACTIVITY (I.E., THE DISCHARGE FARTHEST UPSTREAM AT THE SITE) BUT DOWNSTREAM OF ANY OTHER STORMWATER DISCHARGES NOT ASSOCIATED WITH THE PERMITTED ACTIVITY. WHERE APPROPRIATE, SEVERAL UPSTREAM SAMPLES FROM ACROSS THE RECEIVING WATER(S) MAY NEED TO BE TAKEN AND THE ARITHMETIC AVERAGE OF THE TURBIDITY OF THESE SAMPLES USED FOR THE UPSTREAM TURBIDITY

(B). THE DOWNSTREAM SAMPLE FOR EACH RECEIVING WATER(S) MUST BE TAKEN DOWNSTREAM OF THE CONFLUENCE OF THE LAST STORMWATER DISCHARGE FROM THE PERMITTED ACTIVITY (I.E., THE DISCHARGE FARTHEST DOWNSTREAM AT THE SITE) BUT UPSTREAM OF ANY OTHER STORMWATER DISCHARGE NOT ASSOCIATED WITH THE PERMITTED ACTIVITY. WHERE APPROPRIATE, SEVERAL DOWNSTREAM SAMPLES FROM ACROSS THE RECEIVING WATER(S) MAY NEED TO BE TAKEN AND THE ARITHMETIC AVERAGE OF THE TURBIDITY OF THESE SAMPLES USED FOR THE DOWNSTREAM TURBIDITY VALUE.

(C). IDEALLY THE SAMPLES SHOULD BE TAKEN FROM THE HORIZONTAL AND VERTICAL CENTER OF THE RECEIVING WATER(S) OR THE STORMWATER OUTFALL CHANNEL(S).

(D). CARE SHOULD BE TAKEN TO AVOID STIRRING THE BOTTOM SEDIMENTS IN THE RECEIVING WATER(S) OR IN THE OUTFALL STORMWATER CHANNEL.

(E). THE SAMPLING CONTAINER SHOULD BE HELD SO THAT THE OPENING FACES UPSTREAM.

(F). THE SAMPLES SHOULD BE KEPT FREE FROM FLOATING DEBRIS.

(G). PERMITTEES DO NOT HAVE TO SAMPLE SHEET FLOW THAT FLOWS ONTO UNDISTURBED NATURAL AREAS OR AREAS STABILIZED BY THE PROJECT. FOR PURPOSES OF THIS SECTION, STABILIZED SHALL MEAN, FOR UNPAVED AREAS AND AREAS NOT COVERED BY PERMANENT STRUCTURES AND AREAS LOCATED OUTSIDE THE WASTE DISPOSAL LIMITS OF A LANDFILL CELL THAT HAS BEEN CERTIFIED BY EPD FOR WASTE DISPOSAL, 100% OF THE SOIL SURFACE IS UNIFORMLY COVERED IN PERMANENT VEGETATION WITH A DENSITY OF 70% OR GREATER, OR LANDSCAPED ACCORDING TO THE PLAN (UNIFORMLY COVERED WITH LANDSCAPING MATERIALS IN PLANNED LANDSCAPED AREAS), OR EQUIVALENT PERMANENT STABILIZATION MEASURES AS DEFINED IN THE MANUAL (EXCLUDING A CROP OF ANNUAL VEGETATION AND A SEEDING OF TARGET CROP PERENNIALS APPROPRIATE FOR THE REGION).

(H). ALL SAMPLING PURSUANT TO THIS PERMIT MUST BE DONE IN SUCH A WAY (INCLUDING GENERALLY ACCEPTED SAMPLING METHODS, LOCATIONS, TIMING, AND FREQUENCY) AS TO ACCURATELY REFLECT WHETHER STORMWATER RUNOFF FROM THE CONSTRUCTION SITE IS IN COMPLIANCE WITH THE STANDARD SET FORTH IN PARTS OR III.D.4., WHICHEVER IS APPLICABLE.

31 d. SAMPLING FREQUENCY.

(1). THE PRIMARY PERMITTEE MUST SAMPLE IN ACCORDANCE WITH THE PLAN AT LEAST ONCE FOR EACH RAINFALL EVENT DESCRIBED BELOW. FOR A QUALIFYING EVENT, THE PERMITTEE SHALL SAMPLE AT THE BEGINNING OF ANY STORMWATER DISCHARGE TO A MONITORED RECEIVING WATER AND/OR FROM A MONITORED OUTFALL LOCATION WITHIN IN FORTY-FIVE (45) MINUTES OR AS SOON AS POSSIBLE.

(2). HOWEVER, WHERE MANUAL AND AUTOMATIC SAMPLING ARE IMPOSSIBLE (AS DEFINED IN THIS PERMIT), OR ARE BEYOND THE PERMITTEE'S CONTROL, THE PERMITTEE SHALL TAKE SAMPLES AS SOON AS POSSIBLE, BUT IN NO CASE MORE THAN TWELVE (12) HOURS AFTER THE BEGINNING OF THE STORMWATER DISCHARGE.

(3). SAMPLING BY THE PERMITTEE SHALL OCCUR FOR THE FOLLOWING QUALIFYING EVENTS:

(A). FOR EACH AREA OF THE SITE THAT DISCHARGES TO A RECEIVING WATER OR FROM AN OUTFALL, THE FIRST RAIN EVENT THAT REACHES OR EXCEEDS 0.5 INCH WITH A STORMWATER DISCHARGE THAT OCCURS DURING NORMAL BUSINESS HOURS AS DEFINED IN THIS PERMIT AFTER ALL CLEARING AND GRUBBING OPERATIONS HAVE BEEN COMPLETED, BUT PRIOR TO COMPLETION OF MASS GRADING OPERATIONS, IN THE DRAINAGE AREA OF THE LOCATION SELECTED AS THE SAMPLING LOCATION;

(B). IN ADDITION TO (A) ABOVE, FOR EACH AREA OF THE SITE THAT DISCHARGES TO A RECEIVING WATER OR FROM AN OUTFALL, THE FIRST RAIN EVENT THAT REACHES OR EXCEEDS 0.5 INCH WITH A STORMWATER DISCHARGE THAT OCCURS DURING NORMAL BUSINESS HOURS AS DEFINED IN THIS PERMIT EITHER 30 DAYS AFTER THE FIRST SAMPLING EVENT OR AFTER ALL MASS GRADING OPERATIONS HAVE BEEN COMPLETED, BUT PRIOR TO SUBMITTAL OF A NOT, IN THE DRAINAGE AREA OF THE LOCATION SELECTED AS THE SAMPLING LOCATION, WHICHEVER COMES FIRST;

(C). AT THE TIME OF SAMPLING PERFORMED PURSUANT TO (A) AND (B) ABOVE, IF BMPS IN ANY AREA OF THE SITE THAT DISCHARGES TO A RECEIVING WATER OR FROM AN OUTFALL ARE NOT PROPERLY DESIGNED, INSTALLED AND MAINTAINED, CORRECTIVE ACTION SHALL BE DEFINED AND IMPLEMENTED WITHIN TWO (2) BUSINESS DAYS, AND TURBIDITY SAMPLES SHALL BE TAKEN FROM DISCHARGES FROM THAT AREA OF THE SITE FOR EACH SUBSEQUENT RAIN EVENT THAT REACHES OR EXCEEDS 0.5 INCH DURING NORMAL BUSINESS HOURS* UNTIL THE SELECTED TURBIDITY STANDARD IS ATTAINED, OR UNTIL POST-STORM EVENT INSPECTIONS DETERMINE THAT BMPS ARE PROPERLY DESIGNED, INSTALLED AND MAINTAINED;

(D). WHERE SAMPLING PURSUANT TO (A), (B) OR (C) ABOVE IS REQUIRED BUT NOT POSSIBLE (OR NOT REQUIRED BECAUSE THERE WAS NO DISCHARGE), THE PERMITTEE, IN ACCORDANCE WITH PART IV.D.4.A.(6), MUST INCLUDE A WRITTEN JUSTIFICATION IN THE INSPECTION REPORT OF WHY SAMPLING WAS NOT PERFORMED. PROVIDING THIS JUSTIFICATION DOES NOT RELIEVE THE PERMITTEE OF ANY SUBSEQUENT SAMPLING OBLIGATIONS UNDER (A), (B) OR (C) ABOVE; AND

(E). EXISTING CONSTRUCTION ACTIVITIES, I.E., THOSE THAT ARE OCCURRING ON OR BEFORE THE EFFECTIVE DATE OF THIS PERMIT, THAT HAVE MET THE SAMPLING REQUIRED BY (A) ABOVE SHALL SAMPLE IN ACCORDANCE WITH (B). THOSE EXISTING CONSTRUCTION ACTIVITIES THAT HAVE MET THE SAMPLING REQUIRED BY (B) ABOVE SHALL NOT BE REQUIRED TO CONDUCT ADDITIONAL SAMPLING OTHER THAN AS REQUIRED BY (C) ABOVE.

*NOTE THAT THE PERMITTEE MAY CHOOSE TO MEET THE REQUIREMENTS OF (A) AND ABOVE BY COLLECTING TURBIDITY SAMPLES FROM ANY RAIN EVENT THAT REACHES OR EXCEEDS 0.5 INCH AND ALLOWS FOR SAMPLING AT ANY TIME OF THE DAY OR WEEK.

7. NON-STORMWATER DISCHARGES. EXCEPT FOR FLOWS FROM FIRE FIGHTING ACTIVITIES, SOURCES OF NON-STORMWATER LISTED IN PART III.A.2. OF THIS PERMIT THAT ARE COMBINED WITH STORMWATER DISCHARGES ASSOCIATED WITH CONSTRUCTION ACTIVITY MUST BE IDENTIFIED IN THE PLAN. THE PLAN SHALL IDENTIFY AND ENSURE THE IMPLEMENTATION OF APPROPRIATE POLLUTION PREVENTION MEASURES FOR THE NON-STORMWATER COMPONENT(S) OF THE DISCHARGE.

E. REPORTING.

1. THE APPLICABLE PERMITTEES ARE REQUIRED TO SUBMIT THE SAMPLING RESULTS TO THE EPD AT THE ADDRESS SHOWN IN PART II.C. BY THE FIFTEENTH DAY OF THE MONTH FOLLOWING THE REPORTING PERIOD. REPORTING PERIODS ARE MONTHS DURING WHICH SAMPLES ARE TAKEN IN ACCORDANCE WITH THIS PERMIT. SAMPLING RESULTS SHALL BE IN A CLEARLY LEGIBLE FORMAT. UPON WRITTEN NOTIFICATION, EPD MAY REQUIRE THE APPLICABLE PERMITTEE TO SUBMIT THE SAMPLING RESULTS ON A MORE FREQUENT BASIS. SAMPLING AND ANALYSIS OF ANY STORMWATER DISCHARGE(S) OR THE RECEIVING WATER(S) BEYOND THE MINIMUM FREQUENCY STATED IN THIS PERMIT MUST BE REPORTED IN A SIMILAR MANNER TO THE EPD. THE SAMPLING REPORTS MUST BE SIGNED IN ACCORDANCE WITH PART V.G.2. SAMPLING REPORTS MUST BE SUBMITTED TO EPD USING THE ELECTRONIC SUBMITTAL SERVICE PROVIDED BY EPD. SAMPLING REPORTS MUST BE SUBMITTED TO EPD UNTIL SUCH TIME AS A NOT IS SUBMITTED IN ACCORDANCE WITH PART VI.

2. ALL SAMPLING REPORTS SHALL INCLUDE THE FOLLOWING INFORMATION:

a. THE RAINFALL AMOUNT, DATE, EXACT PLACE AND TIME OF SAMPLING OR MEASUREMENTS;
b. THE NAME(S) OF THE CERTIFIED PERSONNEL WHO PERFORMED THE SAMPLING AND MEASUREMENTS;
c. THE DATE(S) ANALYSES WERE PERFORMED;
d. THE TIME(S) ANALYSES WERE INITIATED;
e. THE NAME(S) OF THE CERTIFIED PERSONNEL WHO PERFORMED THE ANALYSES;
f. REFERENCES AND WRITTEN PROCEDURES, WHEN AVAILABLE, FOR THE ANALYTICAL TECHNIQUES OR METHODS USED;
g. THE RESULTS OF SUCH ANALYSES, INCLUDING THE BENCH SHEETS, INSTRUMENT READOUTS, COMPUTER DISKS OR TAPES, ETC., USED TO DETERMINE THESE RESULTS;
h. RESULTS WHICH EXCEED 1000 NTU SHALL BE REPORTED AS "EXCEEDS 1000 NTU;" AND
i. CERTIFICATION STATEMENT THAT SAMPLING WAS CONDUCTED AS PER THE PLAN.

3. ALL WRITTEN CORRESPONDENCE REQUIRED BY THIS PERMIT SHALL BE SUBMITTED BY RETURN RECEIPT CERTIFIED MAIL (OR SIMILAR SERVICE) TO THE APPROPRIATE DISTRICT OFFICE OF THE EPD ACCORDING TO THE SCHEDULE IN APPENDIX A OF THIS PERMIT. THE PERMITTEE SHALL RETAIN A COPY OF THE PROOF OF SUBMITTAL AT THE CONSTRUCTION SITE OR THE PROOF OF SUBMITTAL SHALL BE READILY AVAILABLE AT A DESIGNATED LOCATION FROM COMMENCEMENT OF CONSTRUCTION UNTIL SUCH TIME AS A NOT IS SUBMITTED IN ACCORDANCE WITH PART VI.

32 F. RETENTION OF RECORDS.

1. THE PRIMARY PERMITTEE SHALL RETAIN THE FOLLOWING RECORDS AT THE CONSTRUCTION SITE OR THE RECORDS SHALL BE READILY AVAILABLE AT A DESIGNATED ALTERNATE LOCATION FROM COMMENCEMENT OF CONSTRUCTION UNTIL SUCH TIME AS A NOT IS SUBMITTED IN ACCORDANCE WITH PART VI:

a. A COPY OF ALL NOTICES OF INTENT SUBMITTED TO EPD;
b. A COPY OF THE EROSION, SEDIMENTATION AND POLLUTION CONTROL PLAN REQUIRED BY THIS PERMIT;
c. THE DESIGN PROFESSIONAL'S REPORT OF THE RESULTS OF THE INSPECTION CONDUCTED IN ACCORDANCE WITH PART IV.A.5. OF THIS PERMIT;
d. A COPY OF ALL SAMPLING INFORMATION, RESULTS, AND REPORTS REQUIRED BY THIS PERMIT;
e. A COPY OF ALL INSPECTION REPORTS GENERATED IN ACCORDANCE WITH PART IV.D.4.A. OF THIS PERMIT;
f. A COPY OF ALL VIOLATION SUMMARIES AND VIOLATION SUMMARY REPORTS GENERATED IN ACCORDANCE WITH PART III.D.2. OF THIS PERMIT; AND
g. DAILY RAINFALL INFORMATION COLLECTED IN ACCORDANCE WITH PART IV.D.4.A.(2). OF THIS PERMIT.

2. COPIES OF ALL NOTICES OF INTENT, NOTICES OF TERMINATION, INSPECTION REPORTS, SAMPLING REPORTS (INCLUDING ALL CALIBRATION AND MAINTENANCE RECORDS AND ALL ORIGINAL STRIP CHART RECORDINGS FOR CONTINUOUS MONITORING INSTRUMENTATION) OR OTHER REPORTS REQUESTED BY THE EPD, EROSION, SEDIMENTATION AND POLLUTION CONTROL PLANS, RECORDS OF ALL DATA USED TO COMPLETE THE NOTICE OF INTENT TO BE COVERED BY THIS PERMIT AND ALL OTHER RECORDS REQUIRED BY THIS PERMIT SHALL BE RETAINED BY THE PERMITTEE WHO EITHER PRODUCED OR USED IT FOR A PERIOD OF AT LEAST THREE YEARS FROM THE DATE THAT THE NOT IS SUBMITTED IN ACCORDANCE WITH PART VI. OF THIS PERMIT. THESE RECORDS MUST BE MAINTAINED AT THE PERMITTEE'S PRIMARY PLACE OF BUSINESS OR AT A DESIGNATED ALTERNATIVE LOCATION ONCE THE CONSTRUCTION ACTIVITY HAS CEASED AT THE PERMITTED SITE. THIS PERIOD MAY BE EXTENDED BY REQUEST OF THE EPD AT ANY TIME UPON WRITTEN NOTIFICATION TO THE PERMITTEE.

GROUNDWATER WELL RESTORATION

APPENDIX 1

THE ES&PC PLAN MUST INCLUDE AT LEAST FOUR (4) OF THE FOLLOWING BMPS FOR THOSE AREAS OF THE SITE WHICH DISCHARGE TO AN IMPAIRED STREAM SEGMENT AND FOR SITES WHICH EPD HAS APPROVED IN WRITING A REQUEST TO DISTURB 50 ACRES OR MORE AT ANY ONE TIME.

The four items chosen must be appropriate for the site conditions.

Plan Page #	Included Y/N	
	N	a. During construction activities, double the width of the 25-foot undisturbed vegetated buffer along all State waters requiring a buffer and the 50-foot undisturbed vegetated buffer along all State waters classified as "trout streams" requiring a buffer. During construction activities, EPD will not grant variances to any such buffers that are increased in width.
	N	b. Increase all temporary sediment basins and retrofitted storm water management basins to provide sediment storage of at least 3600 cubic feet (134 cubic yards) per acre drained.
	N	c. Use baffles in all temporary sediment basins and retrofitted storm water management basins to at least double the conventional flow path length to the outlet structure.
C7.1	Y	d. A large sign (minimum 4 feet x 8 feet) must be posted on site by the actual start date of construction. The sign must be visible from a public roadway. The sign must identify the following: (1) construction site, (2) the permittee(s), (3) the contact person(s) and telephone number(s), and (4) the permittee-hosted website where the Plan can be viewed must be provided on the submitted NOI. The sign must remain on site and the Plan must be available on the provided website until a NOT has been submitted.
C8.0	Y	e. Use tackifiers and/or mulch to stabilize areas left disturbed for more than seven (7) calendar days in accordance with **Part III. D.1.** of the current NPDES Permits.
	N	f. Conduct turbidity sampling after every rain event of 0.5 inch or greater within any 24-hour period, recognizing the exceptions specified in **Part IV.D.6.d.** of the current NPDES Permits.
	N	g. Comply with the applicable end-of-pipe turbidity effluent limit, without the "BMP defense" as provided for in O.C.G.A. 12-7-6 (a)(1).
C8.0	Y	h. Reduce the total planned site disturbance to less than 50% impervious surfaces (excluding any State-mandated buffer areas from such calculations). All calculations must be included on the Plan.
	N	i. Limit the amount of disturbed area at any one time to no greater than 25 acres or 50% of the total planned site, whichever is less. All calculations must be included on the Plan.
	N	j. Use "Dirt II" techniques available on the EPD website to model and manage construction storm water runoff (including sheet flow). All calculations must be included on the Plan. (https://epd.georgia.gov/erosion-and-sedimentation)
	N	k. Conduct soil tests representative of conditions at the time of planting to identify and to implement site-specific fertilizer needs and/or add appropriate organic soil amendments (e.g., compost) and conduct pre- and post-construction soil sampling to a depth of six (6) inches to document improved levels of soil carbon after final stabilization of the construction site.
	N	l. Use mulch filter berms, in addition to a silt fence, on the site perimeter wherever construction storm water (including sheet flow) may be discharged. Mulch filter berms cannot be placed in waterways or areas of concentrated flow.
	N	m. Use appropriate erosion control slope stabilization instead of concrete in all construction storm water ditches and storm drainages designed for a 25-year, 24-hour rainfall event.
	N	n. Use flocculants or coagulants under a passive dosing method (e.g., flocculant blocks) within construction storm water ditches and storm drainages that feed into temporary sediment basins and retrofitted management basins.
	N	o. Install sod for a minimum 20-foot width (in lieu of seeding) after final grade has been achieved, along the site perimeter wherever storm water (including sheet flow) may be discharged.
	N	p. Conduct soil tests to identify and to implement site-specific fertilizer needs
	N	q. Certified personnel for primary permittees shall conduct inspections at least twice every seven (7) calendar days and within 24 hours of the end of the storm that is 0.5 inches rainfall or greater in accordance with **Part IV.D.4.a.(3)(a) – (c)**; secondary permittees, **Part IV.D.4.b.(3)(a) – (c)**; and tertiary permittees **Part IV.D.4.c.(3)(a) – (c)** *
	N	r. Apply the appropriate compost blankets (minimum depth 1.5 inches) to protect soil surfaces until vegetation is established during the final stabilization phase of the construction activity.
	N	s. Use alternative BMPs whose performance has been documented to be superior to conventional BMPs as certified by a Design Professional (unless disapproved by EPD or the Georgia Soil and Water Conservation Commission). (If using this item please refer to the Alternative BMP guidance document found at www.gaswcc.georgia.gov)
C8.0	Y	t. Limit the total planned site disturbance to less than 15% impervious surfaces (excluding any state mandated buffer areas from such calculations). All calculations must be included in the Plan.
	N	u. Conduct inspections during the intermediate grading and drainage BMP phase and during the final BMP phase of the project by the design professional who prepared the Plan in accordance with **Part IV.A.5** of the permit. The Plan must include a statement that the primary permittee must retain the design professional who prepared the Plan to conduct inspections during the intermediate grading and drainage BMP phase and during the final BMP phase.
	N	v. Install Post Construction BMPs (e.g., runoff reduction BMPs) which remove 80% TSS as outlined in the Georgia Stormwater Management Manual known as the Blue Book or an equivalent or more stringent design manual.

Effective January 1, 2025

* This requirement is different for infrastructure projects:
Certified personnel for primary permittees shall conduct inspections at least once every seven (7) calendar days and within 24 hours of the end of the storm that is 0.5 inches rainfall or greater in accordance with Part IV.D.4.a.(3)(a) – (c) of the permit.

GSWCC GEORGIA SOIL AND WATER CONSERVATION COMMISSION
Delmas S Crisp III
LEVEL II CERTIFIED DESIGN PROFESSIONAL
CERTIFICATION NUMBER: 0000100336
ISSUED: 11/08/2025 EXPIRES: 11/08/2028

1

EROSION, SEDIMENTATION & POLLUTION CONTROL PLAN CHECKLIST
STAND ALONE CONSTRUCTION PROJECTS
SWCD: HALL COUNTY

Project Name: GROUNDWATER WELLS #4 & #5 **Address:** 4745 ATLANTA HIGHWAY
City/County: HALL COUNTY, FLOWERY BRANCH, GA **Date on Plans:** OCT 2025
Name & email of person filling out checklist: DELMAS S. CRISP - trey.crisp@esgengineering.com

Plan Included Page #	Y/N	TO BE SHOWN ON ES&PC PLAN
C7.0	Y	1 The applicable Erosion, Sedimentation and Pollution Control Plan Checklist established by the Commission as of January 1 of the year in which the land-disturbing activity was permitted. (The completed Checklist must be submitted with the ES&PC Plan or the Plan will not be reviewed).
ALL	Y	2 Level II certification number issued by the Commission, signature and seal of the certified design professional. (Signature, seal and Level II number must be on each sheet pertaining to ES&PC plan or the Plan will not be reviewed).
C8.0	Y	3 Limits of disturbance shall

4 **24-HOUR EMERGENCY CONTACT:**
TREY CRISP
PHONE: 478-335-4612

5 **PRIMARY PERMITTEE:**

CITY OF FLOWERY BRANCH
5410 PINE STREET
FLOWERY BRANCH, GA 30542
PHONE: 770-967-6371

GSWCC GEORGIA SOIL AND WATER CONSERVATION COMMISSION

Delmas S Crisp III
LEVEL II CERTIFIED DESIGN PROFESSIONAL

CERTIFICATION NUMBER: 0000100336
ISSUED: 11/08/2025 EXPIRES: 11/08/2028

ES&PC NOTES:

26 27 1. FOR BUILDING MATERIALS, BUILDING PRODUCTS, CONSTRUCTION WASTES, TRASH, LANDSCAPE MATERIALS, FERTILIZERS, PESTICIDES, HERBICIDES, DETERGENTS, SANITARY WASTE AND OTHER MATERIALS PRESENT ON THE SITE, PROVIDE COVER (E.G. PLASTIC SHEETING, TEMPORARY ROOFS) TO MINIMIZE THE EXPOSURE OF THESE PRODUCTS TO PRECIPITATION AND TO STORMWATER, OR A SIMILARLY EFFECTIVE MEANS DESIGNED TO MINIMIZE THE DISCHARGE OF POLLUTANTS FROM THESE AREAS. MINIMIZATION OF EXPOSURE TO PRECIPITATION AND TO STORMWATER WILL NOT RESULT IN A DISCHARGE OF POLLUTANTS, OR WHERE EXPOSURE OF A SPECIFIC MATERIAL OR PRODUCT POSES LITTLE RISK TO STORMWATER CONTAMINATION (SUCH AS FINAL PRODUCTS AND MATERIALS INTENDED FOR OUTDOOR USE).

26 27 2. WASTE DISPOSAL. LOCATE WASTE COLLECTION AREAS AWAY FROM STREETS, GUTTERS, WATERCOURSES AND STORM DRAINS. WASTE COLLECTION AREAS, SUCH AS DUMPSTERS, ARE OFTEN BEST LOCATED NEAR CONSTRUCTION SITE ENTRANCES TO MINIMIZE TRAFFIC ON DISTURBED SOILS. THE CONTRACTOR SHOULD INCLUDE SECONDARY CONTAINMENT AROUND LIQUID WASTE COLLECTION AREAS TO FURTHER MINIMIZE THE LIKELIHOOD OF CONTAMINATED DISCHARGES. SOLID MATERIALS, INCLUDING BUILDING MATERIALS, SHALL NOT BE DISCHARGED TO WATERS OF THE STATE, EXCEPT AS AUTHORIZED BY A SECTION 404 PERMIT.

3. ALL PERMITEES ARE REQUIRED TO MINIMIZE THE DISCHARGE OF POLLUTANTS FROM DEWATERING TRENCHES AND EXCAVATIONS. DISCHARGES ARE PROHIBITS UNLESS MANAGED BY APPROPRIATE CONTROLS.

25 4. IF ANY PETROLEUM PRODUCTS ARE KEPT ON SITE, THEN THEY SHALL BE KEPT IN A SECURE AREA AND MONITORED DAILY FOR ANY SPILLS OR LEAKS AND NOTED IN THE SAME DAY IN THE DAILY REPORT.

25 5. IF ANY PETROLEUM OR HARMFUL PRODUCTS ENTERS STATE WATERS OR ANY TRANSPORTATION TO STATE WATERS OF ANY DISCERNIBLE AMOUNT, THE SPILL SHALL BE REPORTED TO THE DEPARTMENT OF NATURAL RESOURCES EMERGENCY OPERATION CENTER AT 1-800-424-8802.

25 6. IF ANY PETROLEUM OR HARMFUL PRODUCTS ARE STORED ON SITE THEN THEY SHALL BE PLACED AS FAR FROM WETLANDS, DRAINAGE DITCHES, STORMWATER SYSTEMS, AND OTHER ENVIRONMENTALLY SENSITIVE AREAS AS POSSIBLE TO PROVIDE AS MUCH PROTECTION AS POSSIBLE. THESE AREAS SHOULD BE SURROUNDED BY BERMS OR OTHER PROTECTIVE MEASURES TO ENSURE THE CAPTURE OF ANY MATERIAL SHOULD LEAKS OR SPILLS OCCUR.

7. STABILIZATION OF THE SITE DURING CONSTRUCTION WITH PERMANENT VEGETATION SUCH AS (Ds3 AND Ds4) WILL BE INSTALLED IN ACCORDANCE WITH THE GRASSING SCHEDULE TO OPTIMIZE GROWTH TO STABILIZE THE SITE ONCE CONSTRUCTION IS COMPLETE AND WILL CONTROL ANY POSSIBLE POLLUTANTS FROM THE SITE.

9 8. THE EXISTING CONDITIONS OF THE SITE CONTAINS SITE AMENITY IMPROVEMENTS. THE PROPOSED USE OF THE SITES ARE PASSIVE PARKS, WITH ASSOCIATED PAVING, SANITARY, STORM, AND OTHER UTILITY INFRASTRUCTURE.

14 9. THE DESIGN PROFESSIONAL WHO PREPARED THE ES&PC PLAN IS TO INSPECT THE INSTALLATION OF THE INITIAL SEDIMENT STORAGE REQUIREMENTS AND PERIMETER CONTROL BMPS WITHIN 7 DAYS AFTER INSTALLATION.

15 10. NON-EXEMPT ACTIVITIES SHALL NOT BE CONDUCTED WITHIN THE 25 OR 50-FOOT UNDISTURBED STREAM BUFFERS AS MEASURED FROM THE POINT OF WRESTED VEGETATION OR WITHIN 25-FEET OF THE COASTAL MARSHLAND BUFFER AS MEASURED FROM THE JURISDICTIONAL DETERMINATION LINE WITHOUT FIRST ACQUIRING THE NECESSARY VARIANCES AND PERMITS.

17 11. AMENDMENTS/REVISIONS TO THE ES&PC PLAN WHICH HAVE A SIGNIFICANT EFFECT ON BMPS WITH A HYDRAULIC COMPONENT MUST BE CERTIFIED BY THE DESIGN PROFESSIONAL.

18 12. WASTE MATERIALS SHALL NOT BE DISCHARGED TO WATERS OF THE STATE, EXCEPT AS AUTHORIZED BY A SECTION 404 PERMIT.

19 13. THE ESCAPE OF SEDIMENT FROM THE SITE SHALL BE PREVENTED BY THE INSTALLATION OF EROSION AND SEDIMENT CONTROL MEASURES AND PRACTICES PRIOR TO LAND DISTURBING ACTIVITIES.

20 14. EROSION CONTROL MEASURES WILL BE MAINTAINED AT ALL TIMES. IF FULL IMPLEMENTATION OF THE APPROVED PLAN DOES NOT PROVIDE FOR EFFECTIVE EROSION CONTROL, ADDITIONAL EROSION AND SEDIMENT CONTROL MEASURES SHALL BE IMPLEMENTED TO CONTROL OR TREAT THE SEDIMENT SOURCE.

21 15. ANY DISTURBED AREA LEFT EXPOSED FOR A PERIOD GREATER THAN 14 DAYS SHALL BE STABILIZED WITH MULCH OR TEMPORARY SEEDING.

28 **MITIGATION OF SITE POLLUTANTS**

NAME OF POLLUTANT	MITIGATION METHOD/BMP
SEDIMENT	CONSTRUCTION EXIT
	SILT FENCE
	INLET PROTECTION
	MULCH/GRASSING
PETROLEUM PRODUCTS	SEE ES&PC NOTES ON THIS SHEET
BUILDING MATERIALS	SEE ES&PC NOTES ON THIS SHEET
CONCRETE	SEE INTERMEDIATE EROSION AND SEDIMENTATION CONTROL NOTES

ANTICIPATED START DATE: 01/01/2025
ANTICIPATED END DATE: 07/01/2025

29 **ESPC PHASING SCHEDULE**

DURATION	MONTH 1	MONTH 2	MONTH 3	MONTH 4	MONTH 5	MONTH 6
INSTALLATION & MAINTENANCE OF INITIAL BMPS	■	■	■	■	■	■
CLEARING & GRUBBING	■					
INSTALLATION & MAINTENANCE OF INTERMEDIATE BMPS		■	■	■	■	■
GRADING, STORMWATER, & UTILITY INSTALLATION		■	■	■	■	
BUILDING CONSTRUCTION		■	■	■	■	
FINAL GRADING, PAVING, & FINAL BMP INSTALLATION						■
REMOVAL OF ALL TEMPORARY BMPS						■

34 **APPENDIX B RATIONALE FOR NTU MONITORING:**

MEASURED/SAMPLED UPSTREAM & DOWNSTREAM NTU VALUES SHALL NOT INCREASE BY MORE THAN 25 NTU AT ANY POINT THROUGHOUT THE DURATION OF THE PROJECT AND THE COMPLETION OF ALL CONSTRUCTION ACTIVITIES.

7

GROUNDWATER WELLS #4 & #5

FOR THE

CITY OF FLOWERY BRANCH
HALL COUNTY, GA

4'

PROJECT SITE
4745 ATLANTA HIGHWAY
FLOWERY BRANCH, GA 30542

E&S CONTACT PERSON:
TREY CRISP
478-335-4612
TCRISP@ESGENGINEERING.COM
ESG ENGINEERING, LLC
6400 PEAKE RD
MACON, GA 31210

PRIMARY PERMITTEE: CITY OF FLOWERY BRANCH, GA
HOSTED WEBSITE TO VIEW PLANS*:
[*INSERT WEB ADDRESS HERE*]

**SIGN MUST REMAIN POSTED ON SITE AND PLAN AVAILABLE ON THE PROVIDED WEBSITE UNTIL A N.O.T. HAS BEEN SUBMITTED.*

8'

ES & PC SIGN DETAIL

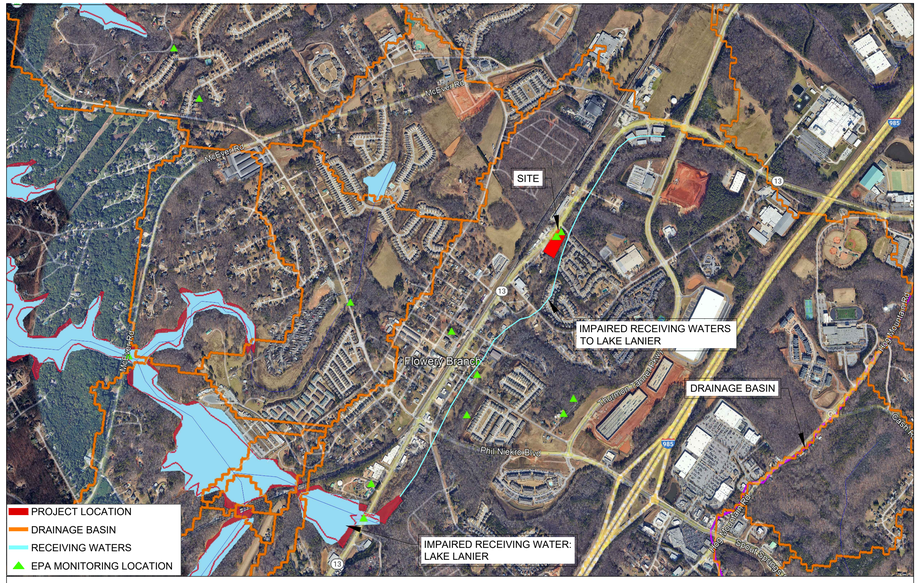

11 RECEIVING WATERS AND IMPAIRED STREAM MAP

ESG ENGINEERING
6400 Peake Rd
Macon, GA 31210
Ph: (478) 474-4996
Fax: (478) 474-5045

GROUNDWATER WELLS #4 & #5

FOR THE

CITY OF FLOWERY BRANCH

REVISIONS

NO	DESCRIPTION	DATE
1	ESPC SHEETS	11-7-25
2	BID SET OF PLANS	12-1-25
3	REVISED WITH CITY COMMENTS	12-5-25
4	ADDENDUM #1	12-8-25
5	ADDENDUM #2	12-11-25
6	ADDENDUM #3	12-12-25
7	REVISED WITH CITY COMMENTS	12-17-25

CONFORMED SET

GEORGIA REGISTERED No. PE046341 PROFESSIONAL ENGINEER ANDREW D SWICEGOOD

DRAWN BY: DSC
CHECKED BY: ADS
DATE: OCT 2025
SCALE: N.T.S.

CONTENT:

EROSION, SEDIMENTATION, AND POLLUTION CONTROL PLAN DETAILS

SHEET NO: 3 7

C7.1

Co

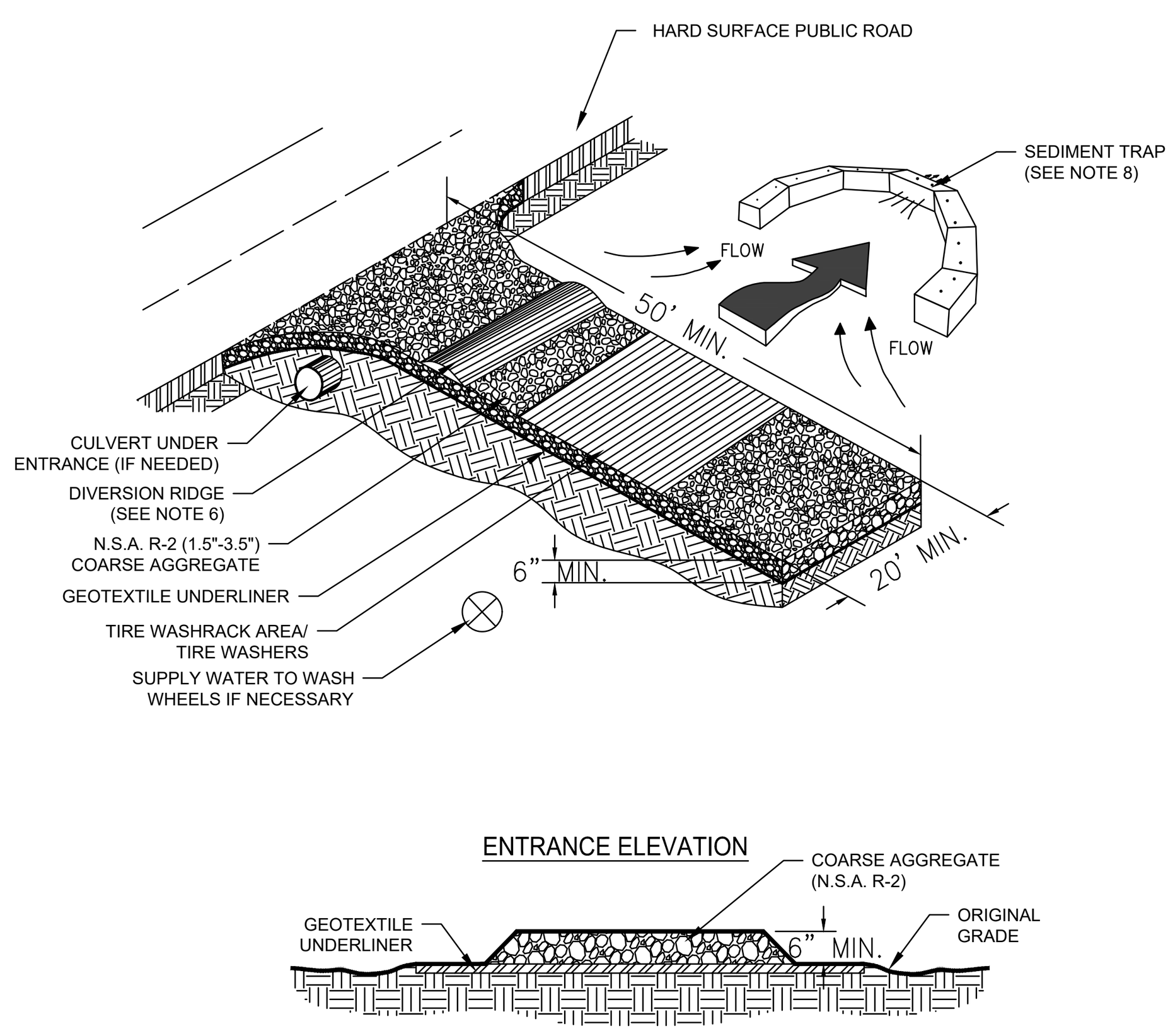

CONSTRUCTION EXIT
NOT TO SCALE
51

CWA CONCRETE WASHOUT AREA

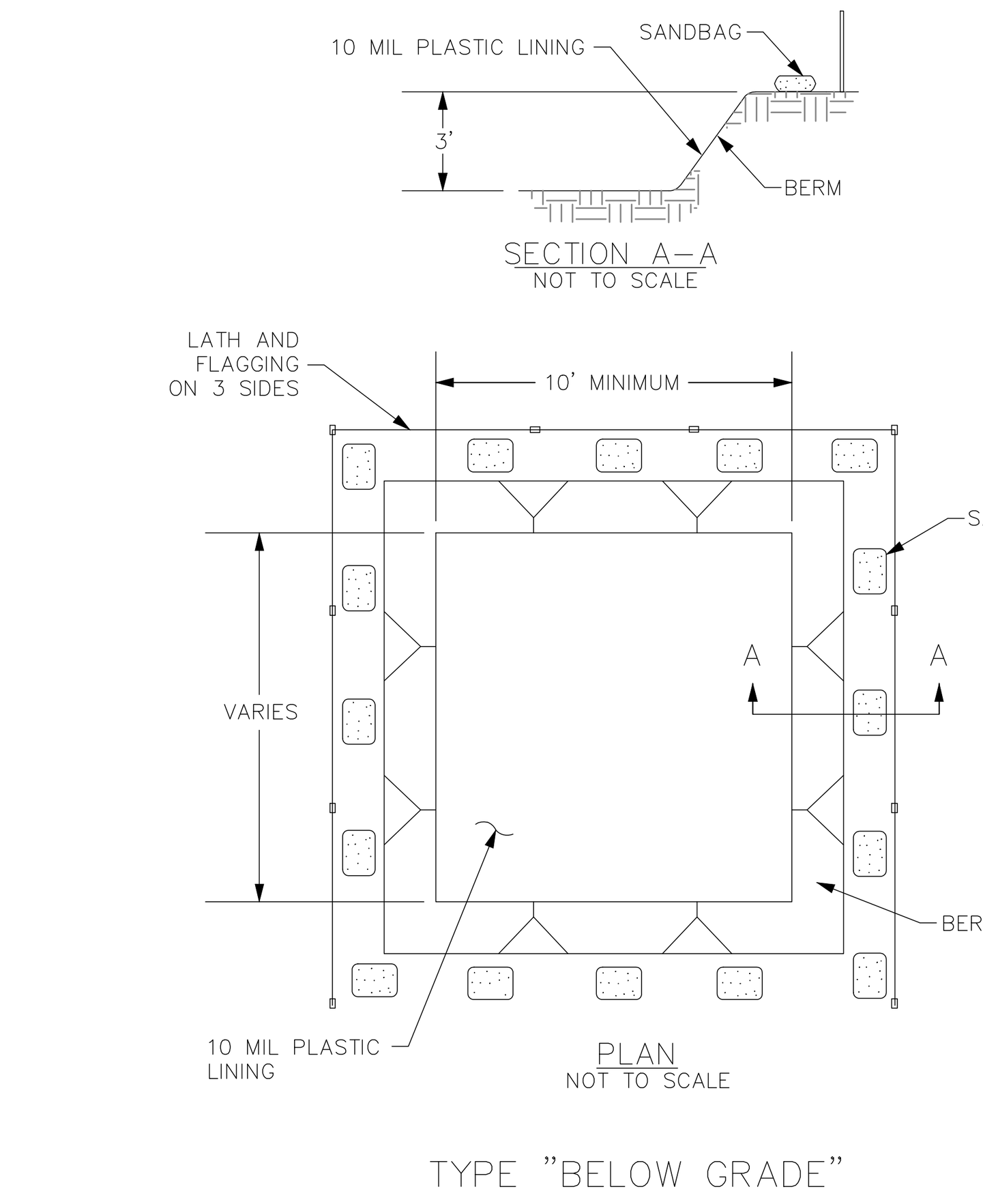

CONCRETE WASHOUT AREA
NOT TO SCALE
24

Sd1 SILT FENCE - TYPE A & C

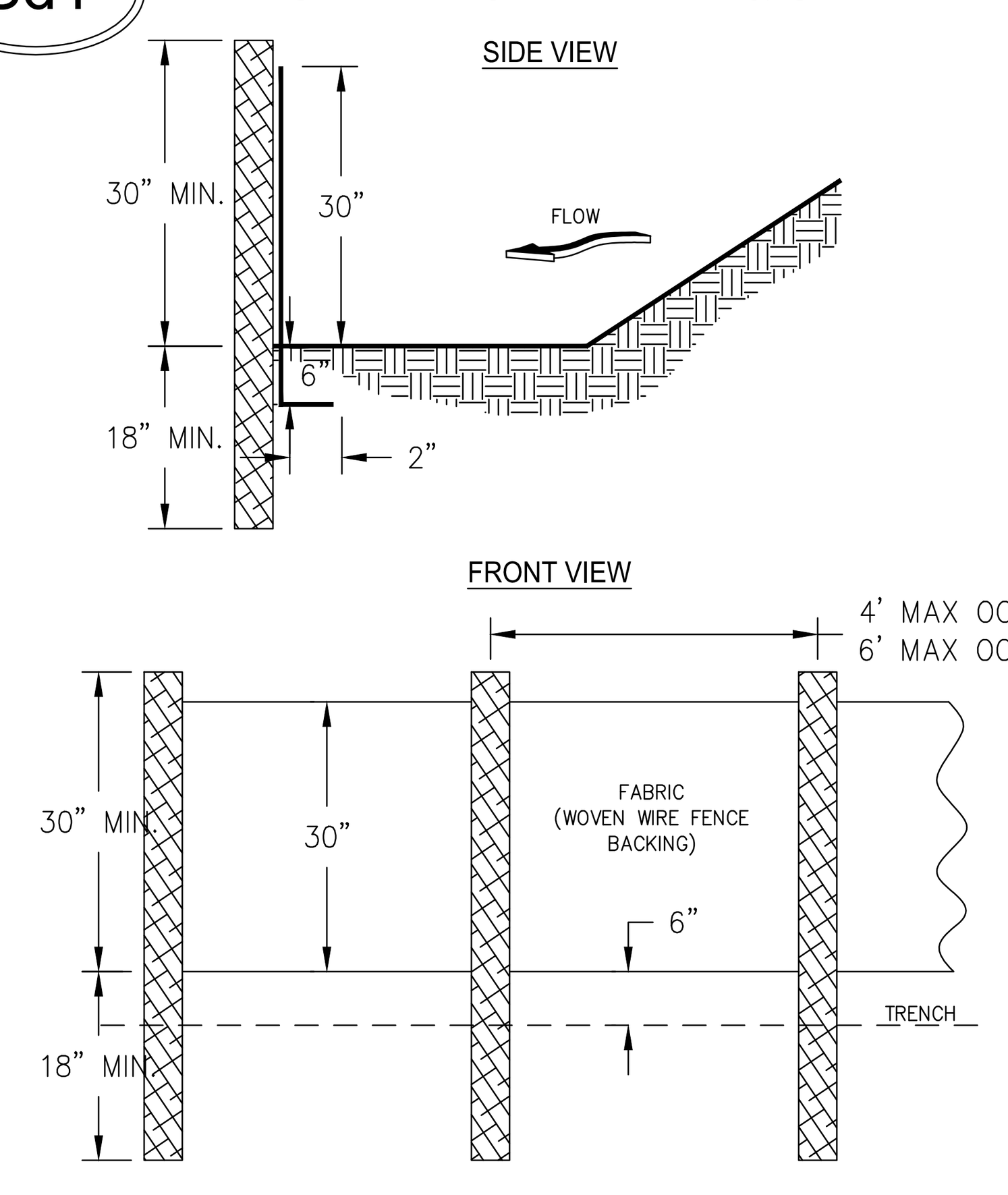

NOTES:
1. USE STEEL OR WOOD POSTS OR AS SPECIFIED BY THE EROSION, SEDIMENTATION, AND POLLUTION CONTROL PLAN.
2. HEIGHT (*) IS TO BE SHOWN ON THE EROSION, SEDIMENTATION, AND POLLUTION CONTROL PLAN.

SILT FENCE (SENSITIVE & NON-SENSITIVE)
NOT TO SCALE

FASTENERS FOR SILT FENCES

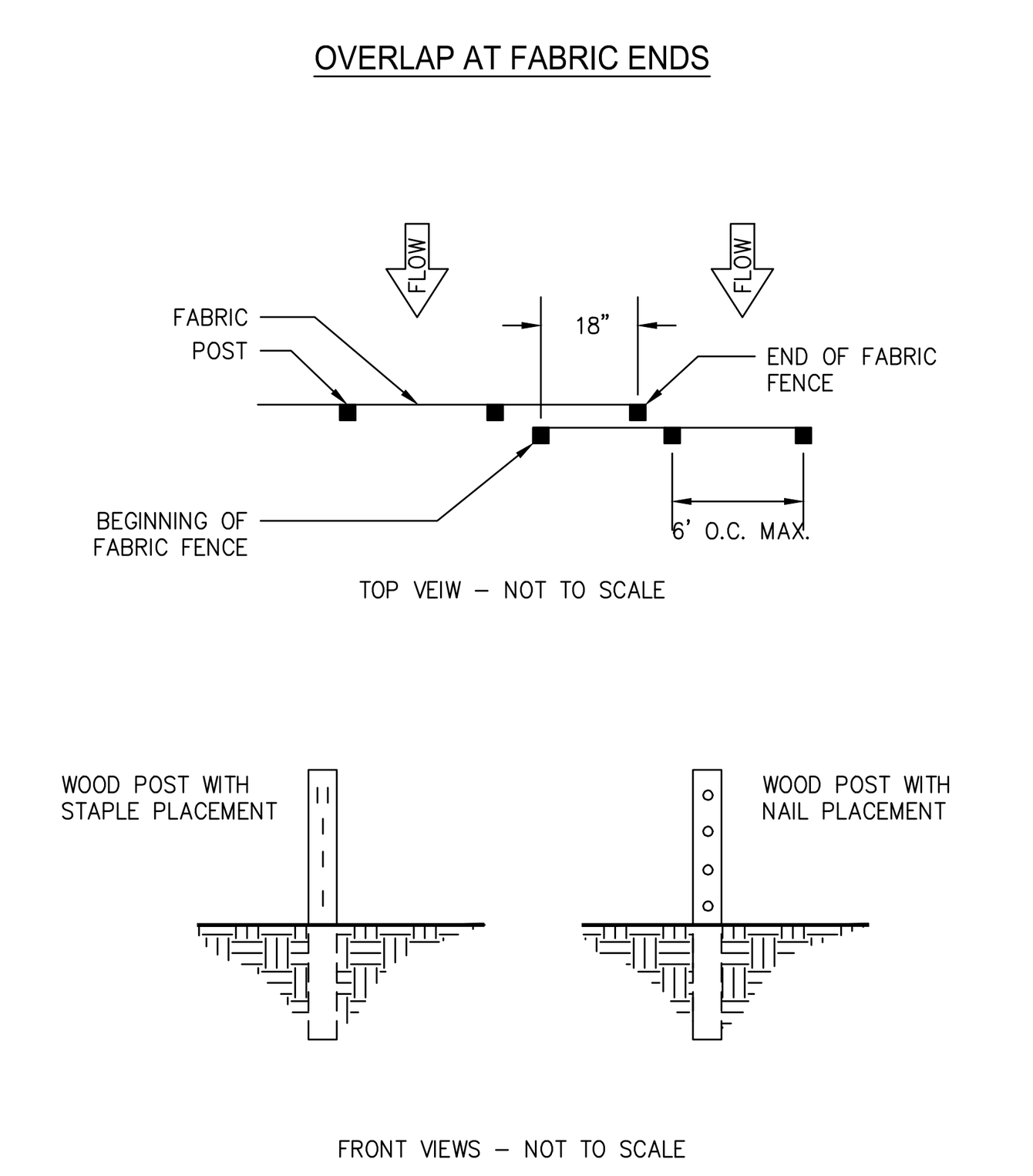

NOTES:
1. THE FABRIC AND WIRE SHOULD BE SECURELY FASTENED TO POSTS AND FABRIC ENDS MUST BE OVERLAPPED A MINIMUM OF 18" OR WRAPPED TOGETHER AROUND A POST TO PROVIDE A CONTINUOUS FABRIC BARRIER AROUND THE INLET.

FASTENERS FOR SILT FENCES
NOT TO SCALE

DEFINITION

The establishment of temporary vegetative cover with fast growing seedings for seasonal protection on disturbed or denuded areas.

CONDITIONS

Temporary grassing, instead of mulch, can be applied to rough graded areas that will be exposed for less than six months. Temporary vegetative measures should be coordinated with permanent measures to assure economical and effective stabilization. Most types of temporary vegetation are ideal to use as companion crops until the permanent vegetation is established.
eeded.

SEEDING RATES FOR TEMPORARY SEEDING

SPECIES	RATE Per 1,000 sq.ft.	RATE Per Acre *	PLANTING DATES **
Rye	3.9 pounds	3 bu.	9/1-3/1
Ryegrass	0.9 pound	40 lbs.	8/15-4/1
Annual Lespedeza	0.9 pound	40 lbs.	1/15-3/15
Weeping Lovegrass	0.1 pound	4 lbs.	2/15-6/15
Sudangrass	1.4 pounds	60 lbs.	3/1-8/1
Browntop Millet	0.9 pound	40 lbs.	4/1-7/15
Wheat	4.1 pounds	3 bu.	9/15-2/1

* Unusual site conditions may require heavier seeding rates
** Seeding dates may need to be altered to fit temperture variations and conditions.

Ds2 DISTURBED AREA STABILIZATION (WITH TEMPORARY SEEDING)

SPECIFICATIONS

Grading and Shaping

Excessive water run-off shall be reduced by properly designed and installed erosion control practices such as closed drains, ditches, dikes, diversions, sediment barriers and others.

No shaping or grading is required if slopes can be stabilized by hand-seeded vegetation or if hydraulic seeding equipment is to be used.

Seedbed Preparation

When a hydraulic seeder is used, seedbed preparation is not required. When using conventional or handseeding, seedbed preparation is not required if the soil material is loose and not sealed by rainfall.

When soil has been sealed by rainfall or consists of smooth cut slopes, the soil shall be pitted, trenched or otherwise scarified to provide a place for seed to lodge and germinate.

Lime and Fertilizer

Agricultural lime is required unless soil tests indicate otherwise. Apply agricultural lime at a rate of one ton per acre. Graded areas require lime application. Soils can be tested to determine if fertilizer is needed. On reasonably fertile soils or soil material, fertilizer is not required. For soils with very low fertility, 500 to 700 pounds of 10-10-10 fertilizer or the equivalent per acre (12-16 lbs./1,000 sq. ft.) shall be applied. Fertilizer should be applied before land preparation and incorporated with a disk, ripper or chisel.

Seeding

Select a grass or grass-legume mixture suitable to the area and season of the year. Seed shall be applied uniformly by hand, cyclone seeder, drill, cultipacker seeder, or hydraulic seeder (slurry including seed and fertilizer). Drill or cultipacker seeders should normally place seed one-quarter to one-half inch deep. Appropriate depth of planting is ten times the seed diameter. Soil should be "raked" lightly to cover seed with soil if seeded by hand.

Mulching

Temporary vegetation can, in most cases, be established without the use of mulch. Mulch without seeding should be considered for short term protection. Refer to Ds1 - Disturbed Area Stabilization (With Mulching Only).

Irrigation

During times of drought, water shall be applied at a rate not causing runoff and erosion. The soil shall be thoroughly wetted to a depth that will insure germination of the seed. Subsequent applications should be made when needed.

DISTURBED AREA STABILIZATION TEMPORARY SEEDING
NOT TO SCALE

DEFINITION

The planting of perennial vegetation such as trees, shrubs, vines, grasses, or legumes on exposed areas for final permanent stabilization. Permanent perennial vegetation shall be used to achieve final stabilization..

CONDITIONS

Permanent perennial vegetation is used to provide a protective cover for exposed areas including cuts, fills, dams, and other denuded areas.

SPECIFICATIONS

Grading and Shaping

Grading and shaping may not be required where hydraulic seeding and fertilizing equipment is to be used. Vertical banks shall be sloped to enable plant establishment.

When conventional seeding and fertilizing are to be done, grade and shape where feasible and practical, so that equipment can be used safely and efficiently during seedbed preparation, seeding, mulching and maintenance of the vegetation.

oncentrations of water that will cause excessive soil erosion shall be diverted to a safe outlet. Diversions and other treatment practices shall conform with the appropriate standards and specifications.

Seedbed Preparation

Seedbed preparation may not be required where hydraulic seeding and fertilizing equipment is to be used. When conventional seeding is to be used, seedbed preparation will be done as follows:

Broadcast plantings

1. Tillage at a minimum, shall adequately loosen the soil to a depth of 4 to 6 inches; alleviate compaction; incorporate lime and fertilizer; smooth and firm the soil; allow for the proper placement of seed, sprigs, or plants; and allow for the anchoring of straw or hay mulch if a disk is to be used.
2. Tillage may be done with any suitable equipment.
3. Tillage should be done on the contour where feasible.
4. On slopes too steep for the safe operation of tillage equipment, the soil surface shall be pitted or trenched across the slope with appropriate hand tools to provide two places 6 to 8 inches apart in which seed may lodge and germinate. Hydraulic seeding may also be used.

Individual Plants

1. Where individual plants are to be set, the soil shall be prepared by excavating holes, opening furrows, or dibble planting.
2. For nursery stock plants, holes shall be large enough to accommodate roots without crowding.
3. Where pine seedlings are to be planted, subsoil under the row 36 inches deep on the contour four to six months prior to planting. Subsoiling should be done when the soil is dry, preferably in August or September.

Ds3 DISTURBED AREA STABILIZATION (WITH PERMANENT VEGETATION)

Lime and Fertilizer Rates and Analysis

Agricultural lime is required at the rate of one to two tons per acre unless soil tests indicate otherwise. Graded areas require lime application. If lime is applied within six months of planting permanent perennial vegetation, additional lime is not required. Agricultural lime shall be within the specifications of the Georgia Department of Agriculture.

Lime spread by conventional equipment shall be "ground limestone." Ground limestone is calcitic or dolomitic limestone ground so that 90 percent of the material will pass through a 10-mesh sieve, not less than 50 percent will pass through a 50-mesh sieve and not less than 25 percent will pass through a 100-mesh sieve.

Fast-acting lime spread by hydraulic seeding equipment should be "finely ground limestone" spanning from the 180 micron size to the 5 micron size. Finely ground limestone is calcitic or dolomitic limestone ground so that 95 percent of the material will pass through a 100-mesh sieve.

It is desirable to use dolomitic limestone in the Sand Hills, Southern Coastal Plain and Atlantic Coast Flatwoods MLRAs. (See Figure 6-4.1)

Agricultural lime is generally not required where only trees are planted.

Initial fertilization, nitrogen, topdressing, and maintenance fertilizer requirements for each species or combination of species are listed in Table 6-5.1.

Lime and Fertilizer Application

When hydraulic seeding equipment is used, the initial fertilizer shall be mixed with seed, innoculant (if needed), and wood cellulose or wood pulp fiber mulch and applied in a slurry. The innoculant, if needed, shall be mixed with the seed prior to being placed into the hydraulic seeder. The slurry mixture will be agitated during application to keep the ingredients thoroughly mixed. The mixture will be spread uniformly over the area within one hour after being placed in the hydroseeder.

Finely ground limestone can be applied in the mulch slurry or in combination with the top dressing.

When conventional planting is to be done, lime and fertilizer shall be applied uniformly in one of the following ways:

1. Apply before land preparation so that it will be mixed with the soil during seedbed preparation.

2. Mix with the soil used to fill the holes, distribute in furrows.

3. Broadcast after steep surfaces are scarified, pitted or trenched.

4. A fertilizer pellet shall be placed at root depth in the closing hole beside each pine tree seedling.

Planting

Hydraulic Seeding

Mix the seed (innoculated if needed), fertilizer, and wood cellulose or wood pulp fiber mulch with water and apply in a slurry uniformly over the area to be treated. Apply within one hour after the mixture is made.

Conventional Seeding

Seeding will be done on a freshly prepared and firmed seedbed. For broadcast planting, use a cultipacker seeder, drill, rotary seeder, other mechanical seeder, or hand seeding to distribute the seed uniformly over the area to be treated. Cover the seed lightly with 1/8 to 1/4 inch of soil for small seed and 1/2 to 1 inch for large seed when using a cultipacker or other suitable equipment.

No-Till Seeding

No-till seeding is permissible into annual cover crops when planting is done following maturity of the cover crop or if the temporary cover stand is sparse enough to allow adequate growth of the permanent (perennial) species. No-till seeding shall be done with appropriate no-till seeding equipment. The seed must be uniformly distributed and planted at the proper depth.

Individual Plants

Shrubs, vines and sprigs may be planted with appropriate planters or hand tools. Pine trees shall be planted manually in the subsoil furrow. Each plant shall be set in a manner that will avoid crowding the roots. Nursery stock plants shall be planted at the same depth or slightly deeper than they grew at the nursery. The tips of vines and sprigs must be at or slightly above the ground surface. Where individual holes are dug, fertilizer shall be placed in the bottom of the hole, two inches of soil shall be added and the plant shall be set in the hole.

Mulching

Mulch is required for all permanent vegetation applications. Mulch applied to seeded areas shall achieve 75% soil cover. Select the mulching material from the following and apply as indicated:

1. Dry straw or dry hay of good quality and free of weed seeds can be used. Dry straw shall be applied at the rate of 2 tons per acre. Dry hay shall be applied at a rate of 2 1/2 tons per acre.
2. Wood cellulose mulch or wood pulp fiber shall be used with hydraulic seeding. It shall be applied at the rate of 500 pounds per acre. Drystraw or dry hay shall be applied (at the rate indicated above) after hydraulic seeding.
3. One thousand pounds of wood cellulose or wood pulp fiber, which includes a tackifier, shall be used with hydraulic seeding on slopes 3/4:1 or steeper.
4. Sericea lespedeza hay containing mature seed shall be applied at a rate of three tons per acre.
5. Pine straw or pine bark shall be applied at a thickness of 3 inches for bedding purposes. Other suitable materials in sufficient quantity may be used where ornamentals or other ground covers are planted. This is not appropriate for seeded areas.
6. When using temporary erosion control blankets or block sod, mulch is not required.
7. Bituminous treated roving may be applied on planted areas on slopes, in ditches or dry waterways to prevent erosion. Bituminous treated roving shall be applied within 24 hours after an area has been planted. Application rates and materials must meet Georgia Department of Transportation specifications.

Wood cellulose and wood pulp fibers shall not contain germination or growth inhibiting factors. They shall be evenly dispersed when agitated in water. The fibers shall contain a dye to allow visual metering and aid in uniform application during seeding.

Applying Mulch

Straw or hay mulch will be spread uniformly within 24 hours after seeding and/or planting. The mulch may be spread by blower-type spreading equipment, other spreading equipment or by hand. Mulch shall be applied to cover 75% of the soil surface.

Wood cellulose or wood fiber mulch shall be applied uniformly with hydraulic seeding equipment.

Anchoring Mulch

Anchor straw or hay mulch immediately after application by one of the following methods:
1. Emulsified asphalt can be (a) sprayed uniformly onto the mulch as it is ejected from the blower machine or (b) sprayed on the mulch immediately following mulch application when straw or hay is spread by methods other than special blower equipment.

The combination of asphalt emulsion and water shall consist of a homogeneous mixture satisfactory for spraying. The mixture shall consist of 100 gallons of grade SS-1h or CSS-1h emulsified asphalt and 100 gallons of water per ton of mulch.
Care shall be taken at all times to protect state waters, the public, adjacent property, pavements, curbs, sidewalks, and all other structures from asphalt discoloration.
2. Hay and straw mulch shall be pressed into the soil immediately after the mulch is spread. A special "packer disk"' or disk harrow with the disks set straight may be used. The disks may be smooth or serrated and should be 20 inches or more in diameter and 8 to 12 inches apart. The edges of the disks shall be dull enough to press the mulch into the ground without cutting it, leaving much of it in an erect position. Mulch shall not be plowed into the soil.
3. Synthetic tackifiers or binders approved by DOT shall be applied in conjunction with or immediately after the mulch is spread. Synthetic tackifiers shall be mixed and applied according to manufacturer's specifications. Refer to Tb - Tackifiers and Binders.
4. Rye or wheat can be included with Fall and Winter plantings to stabilize the mulch. They shall be applied at a rate of one-quarter to one half bushel per acre.
5. Plastic mesh or netting with mesh no larger than one inch by one inch may be needed to anchor straw or hay mulch on unstable soils and concentrated flow areas. These materials shall be installed and anchored according to manufacturer's specifications.

Irrigation

Irrigation shall be applied at a rate that will not cause runoff.

SEEDING RATES FOR PERMANENT SEEDING

SPECIES	RATE Per 1,000 sq.ft.	RATE Per Acre *	PLANTING DATES **
BAHIA	1.4 POUNDS	60 LBS.	1/1-12/31
BERMUDA	0.2 POUND	10 LBS.	2/15-7/1
CENTIPEDE	BLOCK SOD ONLY	BLOCK SOD ONLY	4/1-7/1
LESPEDEZA	1.7 POUNDS	75 LBS.	1/1-12/31
WEEPING LOVE GRASS	0.1 POUND	4 LBS.	2/1-6/15
SWITCH GRASS	0.9 POUND	40 LBS.	3/15-6/1

* Unusual site conditions may require heavier seeding rates
** Seeding dates may need to be altered to fit temperature variations and conditions.

DISTURBED AREA STABILIZATION PERMANENT VEGETATION
NOT TO SCALE
52

DEFINITION

A permanent vegetation using sods on highly erodible or critically eroded lands.

CONDITIONS

This application is appropriate for areas which require immediate vegetative covers, drop inlets, grass swales, and waterways with intermittent flow .

CONSTRUCTION SPECIFICATIONS INSTALLATION

Soil Preparation

- Bring soil surface to final grade. Clear surface of trash, woody debris, stones and clods larger than 1". Apply sod to soil surfaces only and not frozen surfaces, or gravel type soils.
- Topsoil properly applied will help guarantee stand. Don't use topsoil recently treated with herbicides or soil sterilants.
- Mix fertilizer into soil surface. Fertilize based on soil tests or Table 6-6.1. For fall planting of warm season species, half the fertilizer should be applied at planting and the other half in the spring.

Table 6-6.1. Fertilizer Requirements for Soil Surface Application

Fertilizer Type (lbs./acre)	Fertilizer Rate (lbs./acre)	Fertilizer Rate	Season
10-10-10	1000	.025	Fall

- Agricultural lime should be applied based on soil tests or at a rate of 1 to 2 tons per acre.

Installation

- Lay sod with tight joints and in straight lines. Don't overlap joints. Stagger joints and do not stretch sod.
- On slopes steeper than 3:1, sod should be anchored with wooden or biodegradable pins or other approved methods.
- Installed sod should be rolled or tamped to provide good contact between sod and soil.
- Irrigate sod and soil to a depth of 4" immediately after installation.
- Sod should not be cut or spread in extremely wet or dry weather.
- Irrigation should be used to supplement rainfall for a minimum of 2-3 weeks.

Ds4 DISTURBED AREA STABILIZATION (WITH SODDING)

MATERIALS

- Sod selected should be certified. Sod grown in the general area of the project is desirable.
- Sod should be machine cut and contain 3/4" ±1/4" of soil, not including shoots or thatch.
- Sod should be cut to the desired size within ±5%. Torn or uneven pads should be rejected.
- Sod should be cut and installed within 36 hours of digging.
- Avoid planting when subject to frost heave or hot weather if irrigation is not available.
- The sod type should be shown on the plans or installed according to Table 6-6.2. See Figure 6-4.1 for your Resource Area.

Table 6-6.2. Sod Planting Requirements

Grass	Varieties	Resource Area	Growing Season
Bermudagrass	Common Tifway Tifgreen Tiflawn	M-L,P,C P,C P,C P,C	Warm Weather
Bahiagrass	Pensacola	P,C	Warm Weather
Centipede	-	P,C	Warm Weather
St. Augustine	Common Bitterblue Raleigh	C	Warm Weather
Zoysia	Emerald Myer	P,C	Warm Weather
Tall Fescue	Kentucky	M-L,P	Cool Weather

MAINTENANCE

- Re-sod areas where an adequate stand of sod is not obtained.
- New sod should be mowed sparingly. Grass height should not be cut less than 2"-3" or as specified.
- Apply one ton of agricultural lime as indicated by soil test or every 4-6 years.
- Fertilize grasses in accordance with soil tests or Table 6-6.3.

Table 6-6.3. Fertilizer Requirements for Sod

Types of Species	Planting Year	Fertilizer (N-P-K)	Rate (lbs./acre)	Nitrogen Top Dressing Rate (lbs./acre)
Cool Season Grasses	First Second Maintenance	6-12-12 6-12-12 10-10-10	1500 1000 400	50-100 - 30
Warm Season Grasses	First Second Maintenance	6-12-12 6-12-12 10-10-10	1500 800 400	50-100 50-100 30

DISTURBED AREA STABILIZATION SODDING
NOT TO SCALE

DEFINITION

Controlling surface and air movement of dust on construction sites, roads, and demolition sites.

CONDITIONS

This practice is applicable to areas subject to surface and air movement of dust where on and off-site damage may occur without treatment.

METHOD AND MATERIALS

A. TEMPORARY METHODS

Mulches. See standard Ds1 - Disturbed Area Stabilization (With Mulching Only). Synthetic resins may be used instead of asphalt to bind mulch material. Refer to standard Tb-Tackifiers and Binders. Resins such as Curasol or Terratack should be used according to manufacturer's recommendations.

Vegetative Cover. See standard Ds2 - Disturbed Area Stabilization (With Temporary Seeding).

Spray-on Adhesives. These are used on mineral soils (not effective on muck soils). Keep traffic off these areas. Refer to standard Tb-Tackifiers and Binders.

Tillage. This practice is designed to roughen and bring clods to the surface. It is an emergency measure which should be used before wind erosion starts. Begin plowing on windward side of site. Chisel-type plows spaced about 12 inches apart, spring-toothed harrows, and similar plows are examples of equipment which may produce the desired effect.

Irrigation. This is generally done as an emergency treatment. Site is sprinkled with water until the surface is wet. Repeat as needed.

Barriers. Solid board fences, snow fences, burlap fences, crate walls, bales of hay and similar material can be used to control air currents and soil blowing. Barriers placed at right angles to prevailing currents at intervals of about 15 times their height are effective in controlling wind erosion.

Calcium Chloride. Apply at rate that will keep surface moist. May need retreatment.

B. PERMANENT METHODS

Permanent Vegetation. See standard Ds3 -Disturbed Area Stabilization (With Permanent Vegetation). Existing trees and large shrubs may afford valuable
protection if left in place.

Topsoiling. This entails covering the surface with less erosive soil material. See standard Tp - Topsoiling.

Stone. Cover surface with crushed stone or coarse gravel. See standard Cr-Construction Road Stabilization.

Du DUST CONTROL ON DISTURBED AREAS

DUST CONTROL ON DISTURBED AREA
NOT TO SCALE

Cd-Hb TYPICAL STRAW BALE CHECK DAM

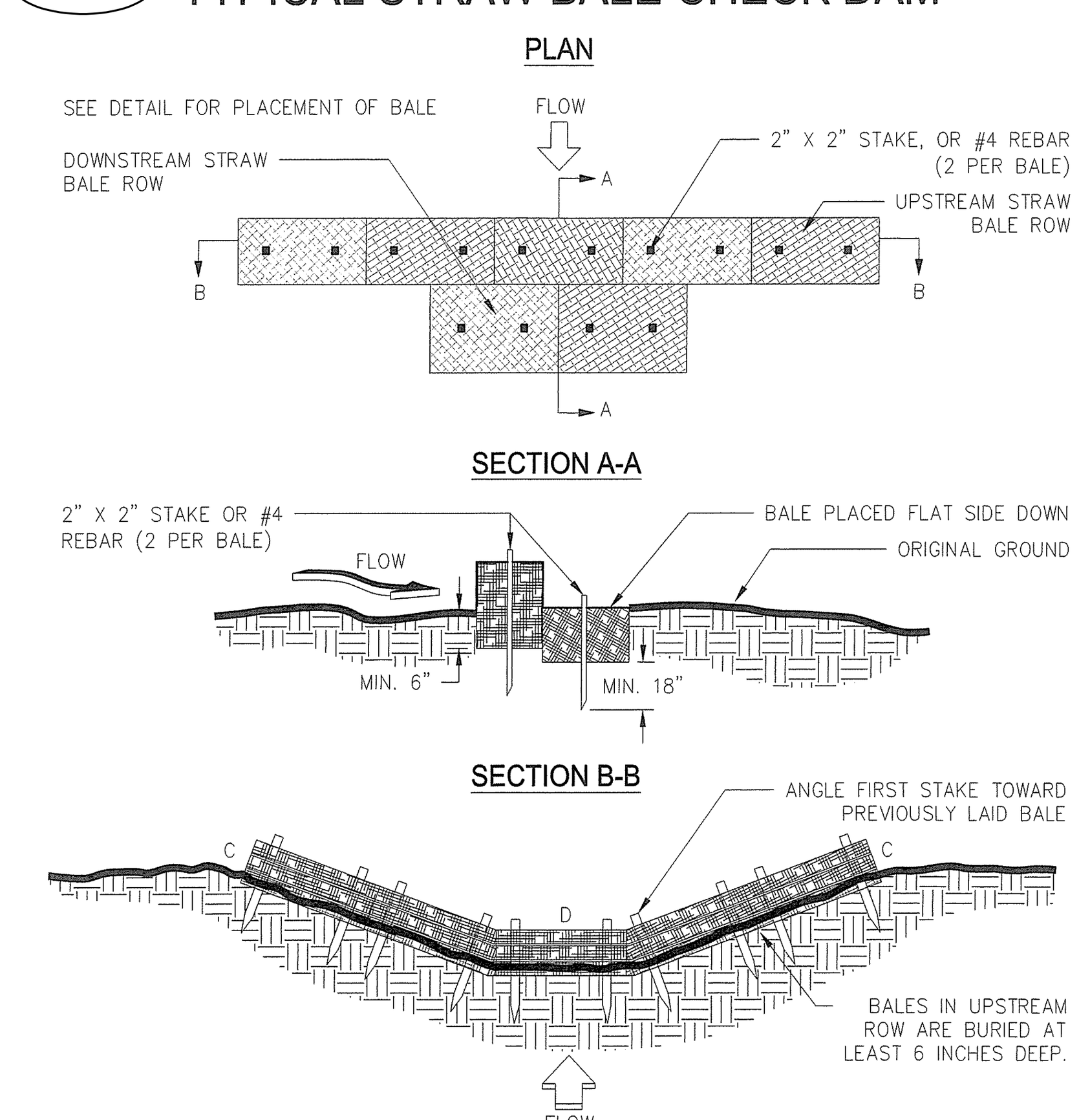

NOTES:
1. BALES SHOULD BE BOUND WITH WIRE OR NYLON STRING AND SHOULD BE PLACED IN ROWS WITH BALE ENDS TIGHTLY ABUTTING THE ADJACENT BALES.
2. REMOVE #4 REBAR AFTER STRAW BALES ARE NO LONGER IN PLACE.
3. POINT C OF SECTION B-B SHOULD ALWAYS BE HIGHER THAN POINT D.

Ss

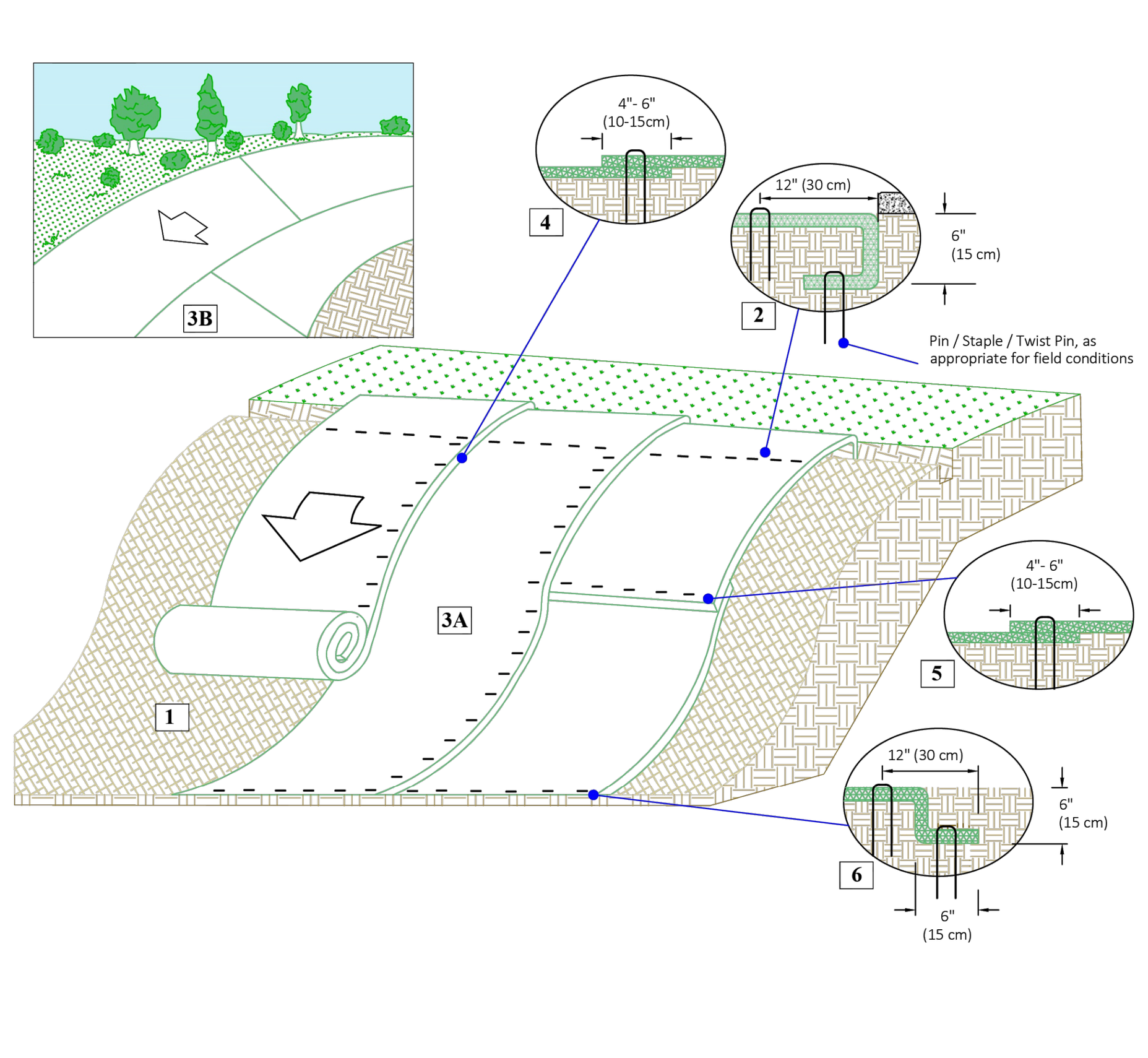

Instructions

1. Prepare soil before installing rolled erosion control products (RECPs), including any necessary application of lime, fertilizer, and seed. Ground surface must be free of debris, rocks, clay clods and raked smooth sufficient to allow intimate contact of the RECP with the soil over the entirety of the installation.
2. Begin at the top of the slope by anchoring the RECPs in a 6" (15 cm) deep X 6" (15 cm) wide trench. Anchor the RECPs with a row of staples/stakes/pins spaced at S_T apart in the bottom of the trench. Backfill and compact the trench after stapling and fold the roll over downslope. Secure RECPs over compacted soil with a row of staples/stakes/pins spaced at S_T apart across the width of the RECPs.
3. Roll the RECPs (A) down or (B) horizontally across the slope. When laying RECPs horizontal, a maximum of two roll widths or 16 feet, whichever is less, may be applied up the slope. If two roll widths or 16 ft is insufficient to cover the slope, material shall be placed vertically. RECPs will unroll with appropriate side against the soil surface. All RECPs must be securely fastened to soil surface by placing staples/stakes/pins in appropriate locations as shown in the staple pattern guide. RollMax RECPs and ECBs should utilize Staple Pattern C, TRMs and VMax materials should utilize Staple Pattern D.
4. The edges of parallel RECPs must be stapled with approximately 4" - 6" (10 - 15 cm) overlap.
5. Consecutive RECPs spliced down the slope must overlapped with the upstream mat atop the downstream mat (shingle style). The overlap should be 4" - 6" (10 - 15 cm).
6. At the terminal end, secure each mat across the width with a row of staples/stakes/pins spaced at S_T. If exposed to flow, foot traffic, wind uplift or other disruption, trench the terminal end in as shown in detail.
7. Fasteners should provide a minimum of twenty pounds of pullout resistance. Six-inch (10 cm) X one-inch (2.5 cm) eleven gauge staples are typically adequate. In loose soils, longer staples may be necessary, twist pins can provide the greatest pullout resistance. In hard or rocky soils, straight pins may by used where staples or twist pins are refused, provided the minimum pullout requirements are met. Bio-degradable fasteners shall not be used with TRM or HPTRM materials.

Staple Pattern Guide

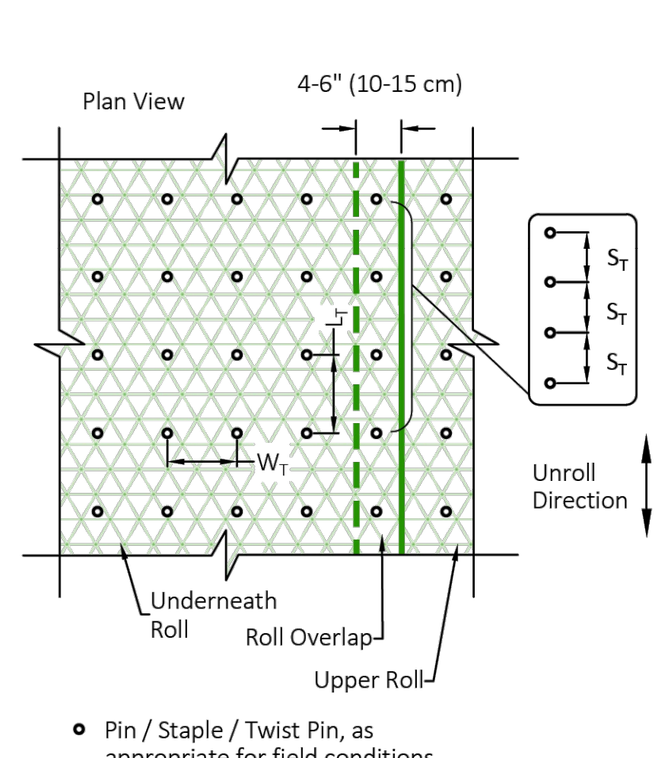

Pin / Staple / Twist Pin, as appropriate for field conditions

Dimension	Staple Pattern C	Staple Pattern D
W_T	30" (75 cm)	22" (55 cm)
L_T	30" (75 cm)	22" (55 cm)
S_T	18" (45 cm)	18" (45 cm)
Nominal Frequency	1.7 / SY	3.0 / SY
Application	ECB (Degradable)	TRM (Permanent)
Required Fastener	Min. 20# pullout	Min. 20# pullout

*Note: Staple Pattern A and B used prior to 8/2019 have been discontinued.

WESTERN GREEN · WESTERN EXCELSIOR CORPORATION · EAST COAST erosion control · NORTH AMERICAN GREEN

Project: Standard Slope/Rainfall Layout - ECB or TRM

Shown: Isometric View of Slope, Fastener Placement, Some Fasteners and Vegetation Omitted for Clarity, Trenching and Overlap, NTS

Date: 4/19/2022
WG: 886-540-9810
www.westerngreen.com
www.westernexcelsior.com
www.nagreen.com

SLOPE STABILIZATION
NOT TO SCALE

INLET SEDIMENT TRAP

SOD STRIPS PROTECT INLET AREA FROM EROSION
(SOURCE: VA SWCC)

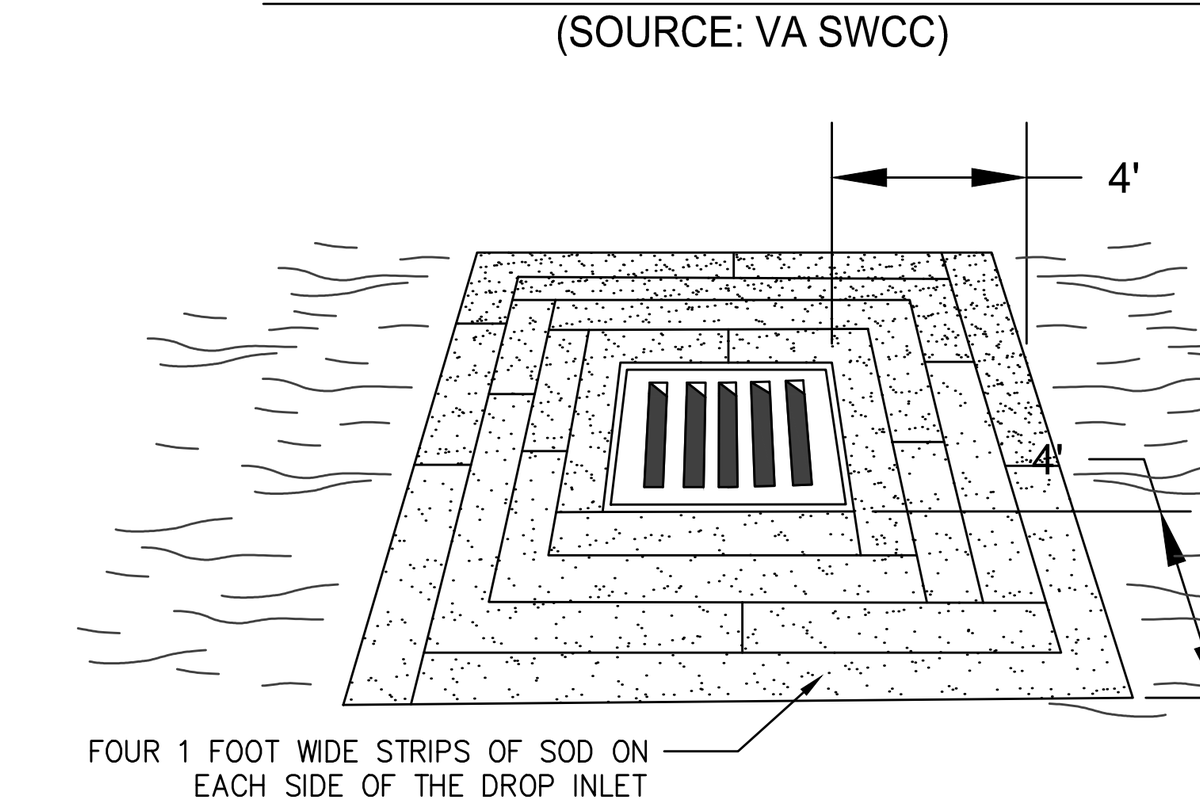

GSWCC GEORGIA SOIL AND WATER CONSERVATION COMMISSION
Delmas S Crisp III
LEVEL II CERTIFIED DESIGN PROFESSIONAL
CERTIFICATION NUMBER: 0000100336
ISSUED: 11/08/2025 EXPIRES: 11/08/2028

INLET SEDIMENT TRAP (SD2)
NOT TO SCALE

DEFINITION

Applying plant residues or other sutiable materials, produced on the site if possible, to the soil surface.

CONDITIONS

Mulch or temporary grassing shall be applied to all exposed areas within 14 days of disturbance. Mulch can be used as a singular erosion control device for up to six months, but it shall be applied at the appropriate depth, depending on the material used, anchored, and have a continuous 90% cover or greater of the soil surface. Maintenance shall be required to maintain appropriate depth and 90% cover. Temporary vegetation may be employed instead of mulch if the area will remain undisturbed for less than six months. If an area will remain undisturbed for greater than six months, permanent vegetative techniques shall be employed.

SPECIFICATIONS

MULCHING WITHOUT SEEDING
This standard applies to grades or cleared areas where seedlings may not have a suitable growing season to produce an erosion retardant cover, but can be stabilized with a mulch cover.

SITE PREPARATION

1. Grade to permit the use of equipment for applying anchoring mulch.
2. Install needed erosion control measures as required such as dikes, diversions, berms, terraces and sediment barriers.
3. Loosen compact soil to a minimum depth of 3 inches.

MULCHING MATERIALS

Select one of the following materials and apply at the depth indicated:
1. Dry straw or hay shall be applied at a depth of 2 to 4 inches providing complete soil coverage. One advantage of this material is easy application
2. Wood waste (chips, sawdust or bark) shall be applied at a depth of 2 to 3 inches. Organic material from the clearing stage of development should remain on site, be chipped, and applied as mulch. This method of mulching can greatly reduce erosion control costs.
3. Polyethylene film shall be secured over banks or stockpile soil material for temporary protection. This material can be salvaged and re-used.

APPLY MULCH

When mulc is used without seeding, mulch shall be applied to provide full coverage of the exposed area.
1. Dry straw or hay mulch and wood chips shall be applied uniformly by hand or by mechanical equipment.
2. If the area will eventually be covered with perinnial vegetation, 20-30 pounds of nitrogen per acre in addition to the normal amount shall be applied to offset the uptake of nitrogen casued by the decomposition of the organic mulches.
3. Cutback asphalt shall be applied uniformly. Care should be taken in areas of pedestrian traffic due to problems of 'tracking in' or damage to shoes, clothing, etc.
4. Apply polyethylene film on exposed areas.

ANCHORING MULCH

1. Straw or hay can be pressed into the soil with a disk harrow with the disk set straight or with a special "pacer disk." Disks may be smooth or serrated and should be 20 inches or more in diameter and 8 to 12 inches apart. The edges of the disk should be dull enough not to cut the mulch but to press it into the soil leaving much of it in an erect position. Straw or hay mulch shall be anchored immediately after application. Straw or hay mulch spread with special blower-type equipment may be anchored with emulsified ashpalt (Grade AE-5 or SS-1). The asphalt emulsion shall be sprayed onto the mulch as it is ejected from the machine. Use 100 gallons of emulsified ashpalt and 100 gallons of water per ton of mulch. Tackifers and binders can be substituted for emulsified asphalt. Please refer to specification Tb-Tackifers and Binders. Plastic mesh or netting with mesh no larger than one inch by one inch shall be installed according to manufactuer's specifications.
2. Netting of the appropriate size shall be used to anchor wood waste. Openings of the netting shall not be larger than the average size of the wood waste chips.
3. Polyethylene film shall be anchor trenched at the top as well as incrementally as necessary.

Ds1 DISTURBED AREA STABILIZATION (WITH MULCHING ONLY)

52

ESG ENGINEERING
6400 Peake Rd
Macon, GA 31210
Ph: (478) 474-4996
Fax: (478) 474-5045

GROUNDWATER WELLS #4 & #5
FOR THE
CITY OF FLOWERY BRANCH

REVISIONS

NO.	DESCRIPTION	DATE
1	ESPC SHEETS	11-7-25
2	BID SET OF PLANS	12-1-25
3	REVISED WITH CITY COMMENTS	12-5-25
4	ADDENDUM #1	12-8-25
5	ADDENDUM #2	12-11-25
6	ADDENDUM #3	12-12-25
7	REVISED WITH CITY COMMENTS	12-17-25

CONFORMED SET



DRAWN BY: DSC
CHECKED BY: ADS
DATE: OCT 2025
SCALE: N.T.S.

CONTENT:
EROSION, SEDIMENTATION, AND POLLUTION CONTROL PLAN DETAILS

SHEET NO:
C7.2

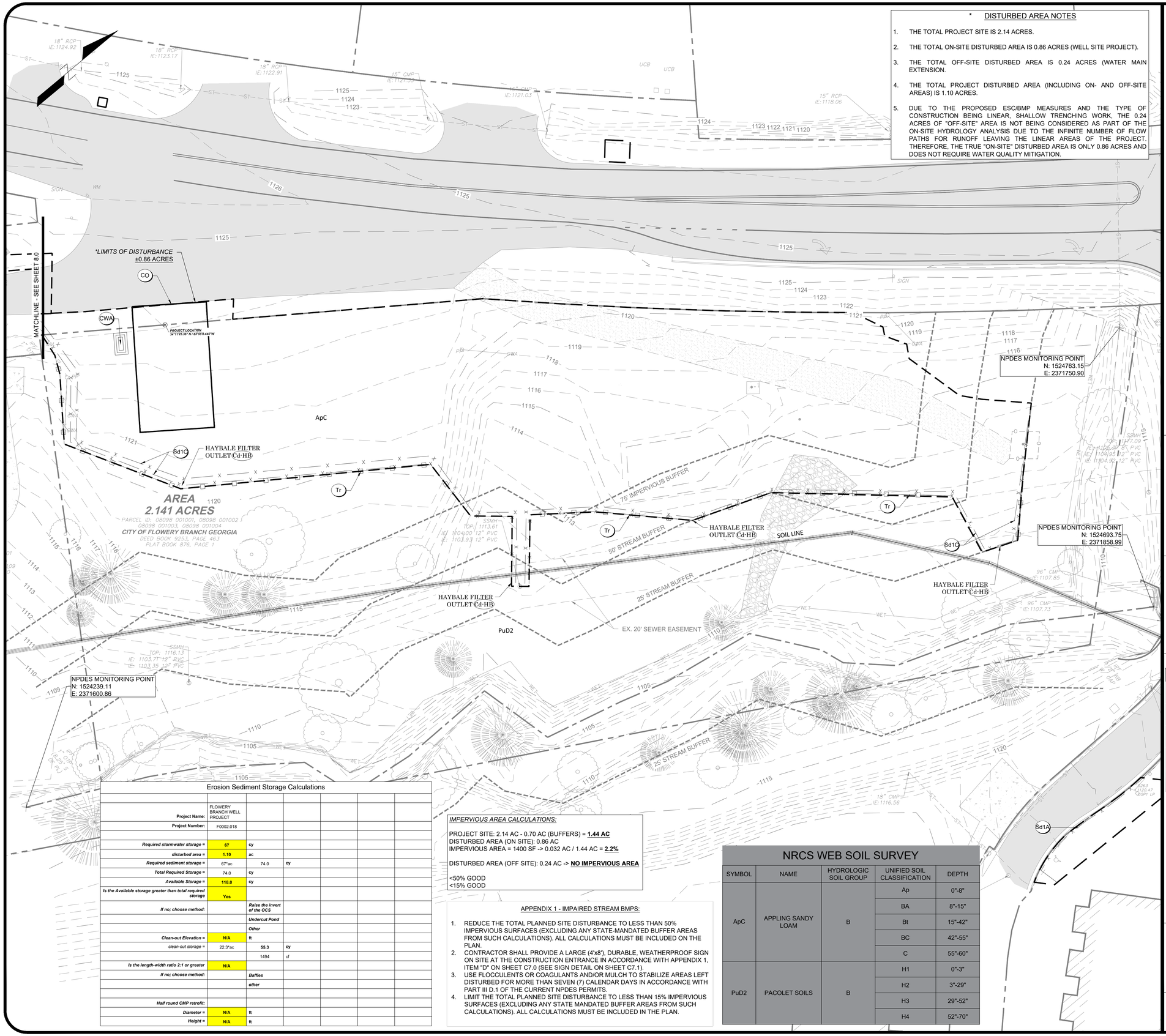

* DISTURBED AREA NOTES

1. THE TOTAL PROJECT SITE IS 2.14 ACRES.
2. THE TOTAL ON-SITE DISTURBED AREA IS 0.86 ACRES (WELL SITE PROJECT).
3. THE TOTAL OFF-SITE DISTURBED AREA IS 0.24 ACRES (WATER MAIN EXTENSION.
4. THE TOTAL PROJECT DISTURBED AREA (INCLUDING ON- AND OFF-SITE AREAS) IS 1.10 ACRES.
5. DUE TO THE PROPOSED ESC/BMP MEASURES AND THE TYPE OF CONSTRUCTION BEING LINEAR, SHALLOW TRENCHING WORK, THE 0.24 ACRES OF "OFF-SITE" AREA IS NOT BEING CONSIDERED AS PART OF THE ON-SITE HYDROLOGY ANALYSIS DUE TO THE INFINITE NUMBER OF FLOW PATHS FOR RUNOFF LEAVING THE LINEAR AREAS OF THE PROJECT. THEREFORE, THE TRUE "ON-SITE" DISTURBED AREA IS ONLY 0.86 ACRES AND DOES NOT REQUIRE WATER QUALITY MITIGATION.

SITE INFORMATION

PROJECT ADDRESS	4745 ATLANTA HWY
PARCEL NUMBER	08098 001001 THRU 08098 001004
PARCEL ZONING	H-B
PROJECT AREA	2.14 ACRES
BUILDING SETBACK	
FRONT	NONE
REAR	30'
SIDE	10'
LANDSCAPE SETBACK	
FRONT	10'
REAR	30'
SIDE	NONE

EROSION, SEDIMENTATION, & POLLUTION CONTROL STATEMENTS:

1. THE DESIGN PROFESSIONAL WHO PREPARED THE ES&PC PLAN IS TO INSPECT AND CERTIFY THE INSTALLATION OF THE INITIAL SEDIMENT STORAGE REQUIREMENTS AND PERIMETER CONTROL BMPS WITHIN 7 DAYS AFTER INSTALLATION.
2. NON-EXEMPT ACTIVITIES SHALL NOT BE CONDUCTED WITHIN THE 25 OR 50-FOOT UNDISTURBED STREAM BUFFERS AS MEASURED FROM THE POINT OF WRESTED VEGETATION OR WITHIN 25-FEET OF THE COASTAL MARSHLAND BUFFER AS MEASURED FROM THE JURISDICTIONAL DETERMINATION LINE WITHOUT FIRST ACQUIRING THE NECESSARY VARIANCES AND PERMITS.
3. AMENDMENTS/REVISIONS TO THE ES&PC PLAN WHICH HAVE A SIGNIFICANT EFFECT ON BMPS WITH A HYDRAULIC COMPONENT MUST BE CERTIFIED BY THE DESIGN PROFESSIONAL.
4. WASTE MATERIALS SHALL NOT BE DISCHARGED TO WATERS OF THE STATE, EXCEPT AS AUTHORIZED BY A SECTION 404 PERMIT.
5. THE ESCAPE OF SEDIMENT FROM THE SITE SHALL BE PREVENTED BY THE INSTALLATION OF EROSION AND SEDIMENT CONTROL MEASURES AND PRACTICES PRIOR TO LAND DISTURBING ACTIVITIES.
6. EROSION CONTROL MEASURES WILL BE MAINTAINED AT ALL TIMES. IF FULL IMPLEMENTATION OF THE APPROVED PLAN DOES NOT PROVIDE FOR EFFECTIVE EROSION CONTROL, ADDITIONAL EROSION AND SEDIMENT CONTROL MEASURES SHALL BE IMPLEMENTED TO CONTROL OR TREAT THE SEDIMENT SOURCE.
7. ANY DISTURBED AREA LEFT EXPOSED FOR A PERIOD GREATER THAN 14 DAYS SHALL BE STABILIZED WITH MULCH OR TEMPORARY SEEDING.

INITIAL EROSION & SEDIMENTATION CONTROL NOTES:

1. THE CONTRACTOR SHALL INSTALL ALL PERIMETER CONTROL BMP'S AND CONSTRUCTION EXIT PRIOR TO ANY LAND DISTURBING ACTIVITIES.
2. THE CONTRACTOR SHALL PROVIDE DUST CONTROL FOR THE PROJECT AREA AS NEEDED BASED ON PROJECT CONDITIONS.
3. THE CONTRACTOR SHALL PERFORM DAILY INSPECTIONS / MAINTENANCE OF ALL EROSION CONTROL BMPS. SEDIMENT LADEN RUNOFF SHALL BE CONTAINED AND TREATED ON SITE.
4. THE TOTAL ON-SITE DISTURBED AREA FOR THE INITIAL PHASE IS 0.86 ACRES.
5. THE TOTAL PROJECT DISTURBED AREA (INCLUDING OFF-SITE AREAS) IS 1.10 ACRES.

SEDIMENT STORAGE CALCULATIONS:

REQUIRED SEDIMENT STORAGE:
67 CUBIC YARD PER ACRE DRAINED = 67 CY/AC * 1.10 AC = 74.0 CY

PROVIDED SILT FENCE: 670 LF TYPE C SILT FENCE & 1,030 LF TYPE A
PROVIDED SEDIMENT STORAGE (Sd1): 3.75 SF*670 LF + 1.88 SF*1,030 LF = 118.0 CY

THE TOTAL REQUIRED SEDIMENT STORAGE FOR THE INTERMEDIATE PHASE IS 74.0 CY. THE SEDIMENT STORAGE WILL BE PROVIDED BY THE SILT FENCE (Sd1).

STRUCTURAL PRACTICES

CODE	PRACTICE	DETAIL	MAP SYMBOL	DESCRIPTION
Co	CONSTRUCTION EXIT			A crushed stone pad located at the construction site exit to provide a place for removing mud from tires thereby protecting public streets.
CWA	CONCRETE WASHOUT AREA			A washdown area for tools, concrete mixer chutes, hoppers and rear of vehicles.
Sd1	SEDIMENT BARRIER			A barrier to prevent sediment from leaving the construction site. It may be sandbags, bales of straw or hay, brush, logs and poles, gravel, or a silt fence.
Tr	TREE PROTECTION			The protection of desirable trees from injury during construction.
Cd	CHECK DAM			A small temporary barrier or dam constructed across a swale, drainage ditch or area of concentrated flow.

Erosion Sediment Storage Calculations

Project Name:	FLOWERY BRANCH WELL PROJECT					
Project Number:	F0002.018					
Required stormwater storage =	**67**	**cy**				
disturbed area =	**1.10**	**ac**				
Required sediment storage =	67*ac	74.0	**cy**			
Total Required Storage =	74.0	**cy**				
Available Storage =	**118.0**	**cy**				
Is the Available storage greater than total required storage	**Yes**					
If no; choose method:		***Raise the invert of the OCS***				
		Undercut Pond				
		Other				
Clean-out Elevation =	**N/A**	**ft**				
clean-out storage =	22.3*ac	**55.3**	**cy**			
		1494	cf			
Is the length-width ratio 2:1 or greater	**N/A**					
If no; choose method:		***Baffles***				
		other				
Half round CMP retrofit:						
Diameter =	**N/A**	**ft**				
Height =	**N/A**	**ft**				

IMPERVIOUS AREA CALCULATIONS:

PROJECT SITE: 2.14 AC - 0.70 AC (BUFFERS) = **1.44 AC**
DISTURBED AREA (ON SITE): 0.86 AC
IMPERVIOUS AREA = 1400 SF -> 0.032 AC / 1.44 AC = **2.2%**

DISTURBED AREA (OFF SITE): 0.24 AC -> **NO IMPERVIOUS AREA**

<50% GOOD
<15% GOOD

APPENDIX 1 - IMPAIRED STREAM BMPS:

1. REDUCE THE TOTAL PLANNED SITE DISTURBANCE TO LESS THAN 50% IMPERVIOUS SURFACES (EXCLUDING ANY STATE-MANDATED BUFFER AREAS FROM SUCH CALCULATIONS). ALL CALCULATIONS MUST BE INCLUDED ON THE PLAN.
2. CONTRACTOR SHALL PROVIDE A LARGE (4'x8'), DURABLE, WEATHERPROOF SIGN ON SITE AT THE CONSTRUCTION ENTRANCE IN ACCORDANCE WITH APPENDIX 1, ITEM "D" ON SHEET C7.0 (SEE SIGN DETAIL ON SHEET C7.1).
3. USE FLOCCULENTS OR COAGULANTS AND/OR MULCH TO STABILIZE AREAS LEFT DISTURBED FOR MORE THAN SEVEN (7) CALENDAR DAYS IN ACCORDANCE WITH PART III D.1 OF THE CURRENT NPDES PERMITS.
4. LIMIT THE TOTAL PLANNED SITE DISTURBANCE TO LESS THAN 15% IMPERVIOUS SURFACES (EXCLUDING ANY STATE MANDATED BUFFER AREAS FROM SUCH CALCULATIONS). ALL CALCULATIONS MUST BE INCLUDED IN THE PLAN.

NRCS WEB SOIL SURVEY

SYMBOL	NAME	HYDROLOGIC SOIL GROUP	UNIFIED SOIL CLASSIFICATION	DEPTH
ApC	APPLING SANDY LOAM	B	Ap	0"-8"
			BA	8"-15"
			Bt	15"-42"
			BC	42"-55"
			C	55"-60"
PuD2	PACOLET SOILS	B	H1	0"-3"
			H2	3"-29"
			H3	29"-52"
			H4	52"-70"

20' 10' 0' 20'
GRAPHIC SCALE 1" = 20'

GSWCC GEORGIA SOIL AND WATER CONSERVATION COMMISSION
Delmas S Crisp III
LEVEL II CERTIFIED DESIGN PROFESSIONAL
CERTIFICATION NUMBER: 0000100336
ISSUED: 11/08/2025 EXPIRES: 11/08/2028

GEORGIA811 www.Georgia811.com

ESG ENGINEERING
6400 Peake Rd
Macon, GA 31210
Ph: (478) 474-4996
Fax: (478) 474-5045

GROUNDWATER WELLS #4 & #5

FOR THE
CITY OF FLOWERY BRANCH

REVISIONS

NO.	DESCRIPTION	DATE
1	ESPC SHEETS	11-7-25
2	BID SET OF PLANS	12-1-25
3	REVISED WITH CITY COMMENTS	12-5-25
4	ADDENDUM #1	12-8-25
5	ADDENDUM #2	12-11-25
6	ADDENDUM #3	12-12-25
7	REVISED WITH CITY COMMENTS	12-17-25

CONFORMED SET

GEORGIA REGISTERED No. PE046341 PROFESSIONAL ENGINEER ANDREW D SWICEGOOD

DRAWN BY: DSC
CHECKED BY: ADS
DATE: OCT 2025
SCALE: SEE SCALE

CONTENT:

CIVIL:
INITIAL EROSION, SEDIMENTATION, & POLLUTION CONTROL PLAN

SHEET NO: 2 3 7

C8.0

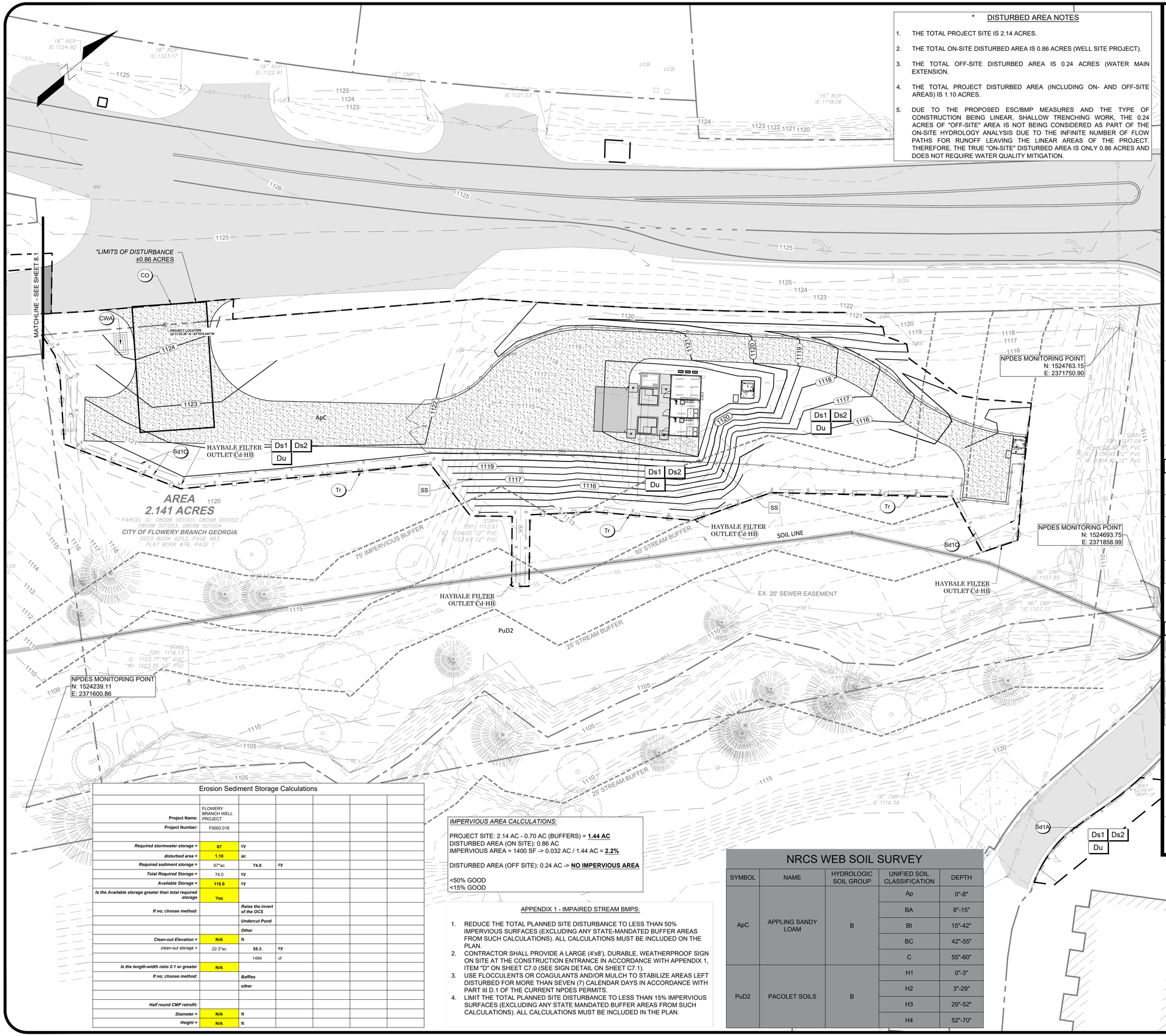

* DISTURBED AREA NOTES

1. THE TOTAL PROJECT SITE IS 2.14 ACRES.
2. THE TOTAL ON-SITE DISTURBED AREA IS 0.86 ACRES (WELL SITE PROJECT).
3. THE TOTAL OFF-SITE DISTURBED AREA IS 0.24 ACRES (WATER MAIN EXTENSION.
4. THE TOTAL PROJECT DISTURBED AREA (INCLUDING ON- AND OFF-SITE AREAS) IS 1.10 ACRES.
5. DUE TO THE PROPOSED ESC/BMP MEASURES AND THE TYPE OF CONSTRUCTION BEING LINEAR, SHALLOW TRENCHING WORK, THE 0.24 ACRES OF "OFF-SITE" AREA IS NOT BEING CONSIDERED AS PART OF THE ON-SITE HYDROLOGY ANALYSIS DUE TO THE INFINITE NUMBER OF FLOW PATHS FOR RUNOFF LEAVING THE LINEAR AREAS OF THE PROJECT. THEREFORE, THE TRUE "ON-SITE" DISTURBED AREA IS ONLY 0.86 ACRES AND DOES NOT REQUIRE WATER QUALITY MITIGATION.

EROSION, SEDIMENTATION, & POLLUTION CONTROL STATEMENTS:

1. THE DESIGN PROFESSIONAL WHO PREPARED THE ES&PC PLAN IS TO INSPECT AND CERTIFY THE INSTALLATION OF THE INITIAL SEDIMENT STORAGE REQUIREMENTS AND PERIMETER CONTROL BMPS WITHIN 7 DAYS AFTER INSTALLATION.
2. NON-EXEMPT ACTIVITIES SHALL NOT BE CONDUCTED WITHIN THE 25 OR 50-FOOT UNDISTURBED STREAM BUFFERS AS MEASURED FROM THE POINT OF WRESTED VEGETATION OR WITHIN 25-FEET OF THE COASTAL MARSHLAND BUFFER AS MEASURED FROM THE JURISDICTIONAL DETERMINATION LINE WITHOUT FIRST ACQUIRING THE NECESSARY VARIANCES AND PERMITS.
3. AMENDMENTS/REVISIONS TO THE ES&PC PLAN WHICH HAVE A SIGNIFICANT EFFECT ON BMPS WITH A HYDRAULIC COMPONENT MUST BE CERTIFIED BY THE DESIGN PROFESSIONAL.
4. WASTE MATERIALS SHALL NOT BE DISCHARGED TO WATERS OF THE STATE, EXCEPT AS AUTHORIZED BY A SECTION 404 PERMIT.
5. THE ESCAPE OF SEDIMENT FROM THE SITE SHALL BE PREVENTED BY THE INSTALLATION OF EROSION AND SEDIMENT CONTROL MEASURES AND PRACTICES PRIOR TO LAND DISTURBING ACTIVITIES.
6. EROSION CONTROL MEASURES WILL BE MAINTAINED AT ALL TIMES. IF FULL IMPLEMENTATION OF THE APPROVED PLAN DOES NOT PROVIDE FOR EFFECTIVE EROSION CONTROL, ADDITIONAL EROSION AND SEDIMENT CONTROL MEASURES SHALL BE IMPLEMENTED TO CONTROL OR TREAT THE SEDIMENT SOURCE.
7. ANY DISTURBED AREA LEFT EXPOSED FOR A PERIOD GREATER THAN 14 DAYS SHALL BE STABILIZED WITH MULCH OR TEMPORARY SEEDING.

INTERMEDIATE EROSION & SEDIMENTATION CONTROL NOTES:

1. CONTRACTOR SHALL INSTALL CONCRETE WASH AREA. CONCRETE WASH AREA SHALL BE USED FOR WASHDOWN OF TOOLS, CONCRETE MIXER CHUTES, HOPPERS AND REAR OF THE VEHICLES ONLY. WASHOUT OF THE DRUM AT THE CONSTRUCTION SITE IS PROHIBITED.
2. THE CONTRACTOR SHALL PROVIDE DUST CONTROL FOR THE PROJECT AREA AS NEEDED BASED ON PROJECT CONDITIONS.
3. THE CONTRACTOR SHALL PERFORM DAILY INSPECTIONS / MAINTENANCE OF ALL EROSION CONTROL BMP'S. SEDIMENT LADEN RUNOFF SHALL BE CONTAINED AND TREATED ON SITE.
4. THE TOTAL ON-SITE DISTURBED AREA FOR THE INITIAL PHASE IS 0.86 ACRES.
5. THE TOTAL PROJECT DISTURBED AREA (INCLUDING OFF-SITE AREAS) IS 1.10 ACRES.
6. THE PRIMARY PERMITTEE WILL RETAIN ESG (THE DESIGN PROFESSIONAL) DURING ALL PHASES OF ESPC.
7. PROVIDED SILT FENCE: ±1,030 LF SILT FENCE TYPE A & ±670 LF SILT FENCE TYPE C.

SEDIMENT STORAGE CALCULATIONS:

REQUIRED SEDIMENT STORAGE:
67 CUBIC YARD PER ACRE DRAINED = 67 CY/AC * 1.10 AC = 74.0 CY

PROVIDED SILT FENCE: 670 LF TYPE C SILT FENCE & 1,030 LF TYPE A
PROVIDED SEDIMENT STORAGE (Sd1): 3.75 SF*670 LF + 1.88 SF*1,030 LF = 118.0 CY

THE TOTAL REQUIRED SEDIMENT STORAGE FOR THE INTERMEDIATE PHASE IS 74.0 CY. THE SEDIMENT STORAGE WILL BE PROVIDED BY THE SILT FENCE (Sd1).

STRUCTURAL PRACTICES

CODE	PRACTICE	DETAIL	MAP SYMBOL	DESCRIPTION
Co	CONSTRUCTION EXIT			A crushed stone pad located at the construction site exit to provide a place for removing mud from tires thereby protecting public streets.
CWA	CONCRETE WASHOUT AREA			A washdown area for tools, concrete mixer chutes, hoppers and rear of vehicles.
Sd1	SEDIMENT BARRIER			A barrier to prevent sediment from leaving the construction site. It may be sandbags, bales of straw or hay, brush, logs and poles, gravel, or a silt fence.
Tr	TREE PROTECTION			The protection of desirable trees from injury during construction.
Cd	CHECK DAM			A small temporary barrier or dam constructed across a swale, drainage ditch or area of concentrated flow.

VEGETATIVE PRACTICES

CODE	PRACTICE	DETAIL	MAP SYMBOL	DESCRIPTION
Ds1	DISTURBED AREA STABILIZATION (WITH MULCHING ONLY)		Ds1	Establishing temporary protection for disturbed areas where seedlings may not have a suitable growing season to produce an erosion retarding cover.
Ds2	DISTURBED AREA STABILIZATION (WITH TEMP. SEEDING)		Ds2	Establishing a temporary vegetative cover with fast growing seedings on disturbed areas.
Du	DUST CONTROL ON DISTURBED AREAS		Du	Controlling surface and air movement of dust on construction site, roadways and similar sites.
Ss	SLOPE STABILIZATION		Ss	A protective covering used to prevent erosion and establish temporary or permanent vegetation on steep slopes, shore lines, or channels.

GSWCC GEORGIA SOIL AND WATER CONSERVATION COMMISSION

Delmas S Crisp III
LEVEL II CERTIFIED DESIGN PROFESSIONAL
CERTIFICATION NUMBER: 0000100336
ISSUED: 11/08/2025 EXPIRES: 11/08/2028

GEORGIA811 www.Georgia811.com

Erosion Sediment Storage Calculations

Project Name:	FLOWERY BRANCH WELL PROJECT						
Project Number:	F0002.018						
Required stormwater storage =	**67**	**cy**					
disturbed area =	**1.10**	**ac**					
Required sediment storage =	67*ac	**74.0**	**cy**				
Total Required Storage =	74.0	**cy**					
Available Storage =	**118.0**	**cy**					
Is the Available storage greater than total required storage	**Yes**						
If no; choose method:		***Raise the invert of the OCS***					
		Undercut Pond					
		Other					
Clean-out Elevation =	**N/A**	**ft**					
clean-out storage =	22.3*ac	**55.3**	**cy**				
		1494	cf				
Is the length-width ratio 2:1 or greater	**N/A**						
If no; choose method:		***Baffles***					
		other					
Half round CMP retrofit:							
Diameter =	**N/A**	**ft**					
Height =	**N/A**	**ft**					

IMPERVIOUS AREA CALCULATIONS:

PROJECT SITE: 2.14 AC - 0.70 AC (BUFFERS) = **1.44 AC**
DISTURBED AREA (ON SITE): 0.86 AC
IMPERVIOUS AREA = 1400 SF -> 0.032 AC / 1.44 AC = **2.2%**

DISTURBED AREA (OFF SITE): 0.24 AC -> **NO IMPERVIOUS AREA**

<50% GOOD
<15% GOOD

APPENDIX 1 - IMPAIRED STREAM BMPS:

1. REDUCE THE TOTAL PLANNED SITE DISTURBANCE TO LESS THAN 50% IMPERVIOUS SURFACES (EXCLUDING ANY STATE-MANDATED BUFFER AREAS FROM SUCH CALCULATIONS). ALL CALCULATIONS MUST BE INCLUDED ON THE PLAN.
2. CONTRACTOR SHALL PROVIDE A LARGE (4'x8'), DURABLE, WEATHERPROOF SIGN ON SITE AT THE CONSTRUCTION ENTRANCE IN ACCORDANCE WITH APPENDIX 1, ITEM "D" ON SHEET C7.0 (SEE SIGN DETAIL ON SHEET C7.1).
3. USE FLOCCULENTS OR COAGULANTS AND/OR MULCH TO STABILIZE AREAS LEFT DISTURBED FOR MORE THAN SEVEN (7) CALENDAR DAYS IN ACCORDANCE WITH PART III D.1 OF THE CURRENT NPDES PERMITS.
4. LIMIT THE TOTAL PLANNED SITE DISTURBANCE TO LESS THAN 15% IMPERVIOUS SURFACES (EXCLUDING ANY STATE MANDATED BUFFER AREAS FROM SUCH CALCULATIONS). ALL CALCULATIONS MUST BE INCLUDED IN THE PLAN.

NRCS WEB SOIL SURVEY

SYMBOL	NAME	HYDROLOGIC SOIL GROUP	UNIFIED SOIL CLASSIFICATION	DEPTH
ApC	APPLING SANDY LOAM	B	Ap	0"-8"
			BA	8"-15"
			Bt	15"-42"
			BC	42"-55"
			C	55"-60"
PuD2	PACOLET SOILS	B	H1	0"-3"
			H2	3"-29"
			H3	29"-52"
			H4	52"-70"

Ds1 Ds2 Du
ALL DISTURBED AREAS

ESG ENGINEERING
6400 Peake Rd
Macon, GA 31210
Ph: (478) 474-4996
Fax: (478) 474-5045

GROUNDWATER WELLS #4 & #5

FOR THE
CITY OF FLOWERY BRANCH

REVISIONS	DATE
ESPC SHEETS	11-7-25
BID SET OF PLANS	12-1-25
REVISED WITH CITY COMMENTS	12-5-25
ADDENDUM #1	12-8-25
ADDENDUM #2	12-11-25
ADDENDUM #3	12-12-25
REVISED WITH CITY COMMENTS	12-17-25

CONFORMED SET

GEORGIA REGISTERED No. PE046341 PROFESSIONAL ENGINEER ANDREW D SWICEGOOD

DRAWN BY: DSC
CHECKED BY: ADS
DATE: OCT 2025
SCALE: SEE SCALE

CONTENT:

CIVIL:
INTERMEDIATE EROSION, SEDIMENTATION, & POLLUTION CONTROL PLAN

SHEET NO: 2 3 4

C8.1

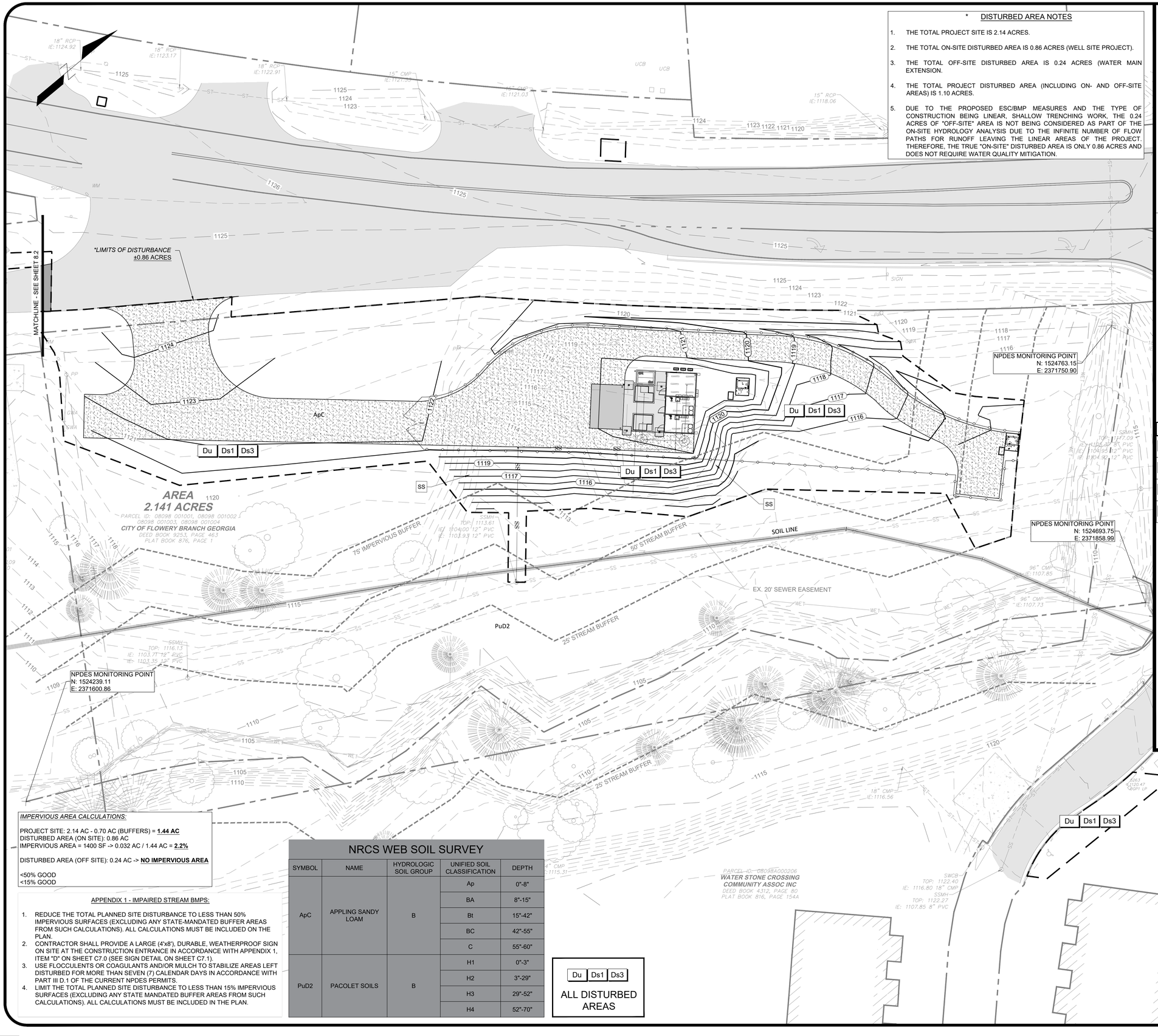

* DISTURBED AREA NOTES

1. THE TOTAL PROJECT SITE IS 2.14 ACRES.
2. THE TOTAL ON-SITE DISTURBED AREA IS 0.86 ACRES (WELL SITE PROJECT).
3. THE TOTAL OFF-SITE DISTURBED AREA IS 0.24 ACRES (WATER MAIN EXTENSION.
4. THE TOTAL PROJECT DISTURBED AREA (INCLUDING ON- AND OFF-SITE AREAS) IS 1.10 ACRES.
5. DUE TO THE PROPOSED ESC/BMP MEASURES AND THE TYPE OF CONSTRUCTION BEING LINEAR, SHALLOW TRENCHING WORK, THE 0.24 ACRES OF "OFF-SITE" AREA IS NOT BEING CONSIDERED AS PART OF THE ON-SITE HYDROLOGY ANALYSIS DUE TO THE INFINITE NUMBER OF FLOW PATHS FOR RUNOFF LEAVING THE LINEAR AREAS OF THE PROJECT. THEREFORE, THE TRUE "ON-SITE" DISTURBED AREA IS ONLY 0.86 ACRES AND DOES NOT REQUIRE WATER QUALITY MITIGATION.

EROSION, SEDIMENTATION, & POLLUTION CONTROL STATEMENTS:

1. THE DESIGN PROFESSIONAL WHO PREPARED THE ES&PC PLAN IS TO INSPECT AND CERTIFY THE INSTALLATION OF THE INITIAL SEDIMENT STORAGE REQUIREMENTS AND PERIMETER CONTROL BMPS WITHIN 7 DAYS AFTER INSTALLATION.
2. NON-EXEMPT ACTIVITIES SHALL NOT BE CONDUCTED WITHIN THE 25 OR 50-FOOT UNDISTURBED STREAM BUFFERS AS MEASURED FROM THE POINT OF WRESTED VEGETATION OR WITHIN 25-FEET OF THE COASTAL MARSHLAND BUFFER AS MEASURED FROM THE JURISDICTIONAL DETERMINATION LINE WITHOUT FIRST ACQUIRING THE NECESSARY VARIANCES AND PERMITS.
3. AMENDMENTS/REVISIONS TO THE ES&PC PLAN WHICH HAVE A SIGNIFICANT EFFECT ON BMPS WITH A HYDRAULIC COMPONENT MUST BE CERTIFIED BY THE DESIGN PROFESSIONAL.
4. WASTE MATERIALS SHALL NOT BE DISCHARGED TO WATERS OF THE STATE, EXCEPT AS AUTHORIZED BY A SECTION 404 PERMIT.
5. THE ESCAPE OF SEDIMENT FROM THE SITE SHALL BE PREVENTED BY THE INSTALLATION OF EROSION AND SEDIMENT CONTROL MEASURES AND PRACTICES PRIOR TO LAND DISTURBING ACTIVITIES.
6. EROSION CONTROL MEASURES WILL BE MAINTAINED AT ALL TIMES. IF FULL IMPLEMENTATION OF THE APPROVED PLAN DOES NOT PROVIDE FOR EFFECTIVE EROSION CONTROL, ADDITIONAL EROSION AND SEDIMENT CONTROL MEASURES SHALL BE IMPLEMENTED TO CONTROL OR TREAT THE SEDIMENT SOURCE.
7. ANY DISTURBED AREA LEFT EXPOSED FOR A PERIOD GREATER THAN 14 DAYS SHALL BE STABILIZED WITH MULCH OR TEMPORARY SEEDING.

FINAL EROSION & SEDIMENTATION CONTROL NOTES:

1. CONTRACTOR SHALL INSTALL CONCRETE WASH AREA. CONCRETE WASH AREA SHALL BE USED FOR WASHDOWN OF TOOLS, CONCRETE MIXER CHUTES, HOPPERS AND REAR OF THE VEHICLES ONLY. WASHOUT OF THE DRUM AT THE CONSTRUCTION SITE IS PROHIBITED.
2. THE CONTRACTOR SHALL REMOVE ALL TEMPORARY BMP'S ONCE FINAL STABILIZATION HAS BEEN MET.
3. THE CONTRACTOR SHALL PERFORM DAILY INSPECTIONS / MAINTENANCE OF ALL EROSION CONTROL BMPS. SEDIMENT LADEN RUNOFF SHALL BE CONTAINED AND TREATED ON SITE.
4. THE PRIMARY PERMITTEE WILL RETAIN THE DESIGN PROFESSIONAL DURING THE INTERMEDIATE GRADING AND DRAINAGE BMP PHASE, AS WELL AS THE FINAL BMP PHASE.
5. DRUM WASHOUT IS PROHIBITED FROM CONSTRUCTION SITE.
4. THE TOTAL ON-SITE DISTURBED AREA FOR THE INITIAL PHASE IS 0.86 ACRES.
5. THE TOTAL PROJECT DISTURBED AREA (INCLUDING OFF-SITE AREAS) IS 1.10 ACRES.

VEGETATIVE PRACTICES

CODE	PRACTICE	DETAIL	MAP SYMBOL	DESCRIPTION
Du	DUST CONTROL ON DISTURBED AREAS		Du	Controlling surface and air movement of dust on construction site, roadways and similar sites.
Ds1	DISTURBED AREA STABILIZATION (WITH MULCHING ONLY)		Ds1	Establishing temporary protection for disturbed areas where seedings may not have a suitable growing season to produce an erosion retarding cover.
Ds3	DISTURBED AREA STABILIZATION (WITH PERM SEEDING)		Ds3	Establishing a permanent vegetative cover such as trees, shrubs, vines, grasses, or legumes on disturbed areas.
Ss	SLOPE STABILIZATION		Ss	A protective covering used to prevent erosion and establish temporary or permanent vegetation on steep slopes, shore lines, or channels.

IMPERVIOUS AREA CALCULATIONS:

PROJECT SITE: 2.14 AC - 0.70 AC (BUFFERS) = **1.44 AC**
DISTURBED AREA (ON SITE): 0.86 AC
IMPERVIOUS AREA = 1400 SF -> 0.032 AC / 1.44 AC = **2.2%**

DISTURBED AREA (OFF SITE): 0.24 AC -> **NO IMPERVIOUS AREA**

<50% GOOD
<15% GOOD

NRCS WEB SOIL SURVEY

SYMBOL	NAME	HYDROLOGIC SOIL GROUP	UNIFIED SOIL CLASSIFICATION	DEPTH
ApC	APPLING SANDY LOAM	B	Ap	0"-8"
			BA	8"-15"
			Bt	15"-42"
			BC	42"-55"
			C	55"-60"
PuD2	PACOLET SOILS	B	H1	0"-3"
			H2	3"-29"
			H3	29"-52"
			H4	52"-70"

APPENDIX 1 - IMPAIRED STREAM BMPS:

1. REDUCE THE TOTAL PLANNED SITE DISTURBANCE TO LESS THAN 50% IMPERVIOUS SURFACES (EXCLUDING ANY STATE-MANDATED BUFFER AREAS FROM SUCH CALCULATIONS). ALL CALCULATIONS MUST BE INCLUDED ON THE PLAN.
2. CONTRACTOR SHALL PROVIDE A LARGE (4'x8'), DURABLE, WEATHERPROOF SIGN ON SITE AT THE CONSTRUCTION ENTRANCE IN ACCORDANCE WITH APPENDIX 1, ITEM "D" ON SHEET C7.0 (SEE SIGN DETAIL ON SHEET C7.1).
3. USE FLOCCULENTS OR COAGULANTS AND/OR MULCH TO STABILIZE AREAS LEFT DISTURBED FOR MORE THAN SEVEN (7) CALENDAR DAYS IN ACCORDANCE WITH PART III D.1 OF THE CURRENT NPDES PERMITS.
4. LIMIT THE TOTAL PLANNED SITE DISTURBANCE TO LESS THAN 15% IMPERVIOUS SURFACES (EXCLUDING ANY STATE MANDATED BUFFER AREAS FROM SUCH CALCULATIONS). ALL CALCULATIONS MUST BE INCLUDED IN THE PLAN.

GSWCC GEORGIA SOIL AND WATER CONSERVATION COMMISSION
Delmas S Crisp III
LEVEL II CERTIFIED DESIGN PROFESSIONAL
CERTIFICATION NUMBER: 0000100336
ISSUED: 11/08/2025 EXPIRES: 11/08/2028

GEORGIA811 www.Georgia811.com

20' 10' 0' 20'
GRAPHIC SCALE 1" = 20'

ESG ENGINEERING
6400 Peake Rd
Macon, GA 31210
Ph: (478) 474-4996
Fax: (478) 474-5045

GROUNDWATER WELLS #4 & #5

FOR THE
CITY OF FLOWERY BRANCH

NO.	REVISIONS DESCRIPTION	DATE
1	ESPC SHEETS	11-7-25
2	BID SET OF PLANS	12-1-25
3	REVISED WITH CITY COMMENTS	12-5-25
4	ADDENDUM #1	12-8-25
5	ADDENDUM #2	12-11-25
6	ADDENDUM #3	12-12-25
7	REVISED WITH CITY COMMENTS	12-17-25

CONFORMED SET

GEORGIA REGISTERED No. PE046341 PROFESSIONAL ENGINEER ANDREW D SWICEGOOD

DRAWN BY: DSC
CHECKED BY: ADS
DATE: OCT 2025
SCALE: SEE SCALE

CONTENT:

CIVIL:
FINAL EROSION, SEDIMENTATION, & POLLUTION CONTROL PLAN

SHEET NO: 2 3 7

C8.2

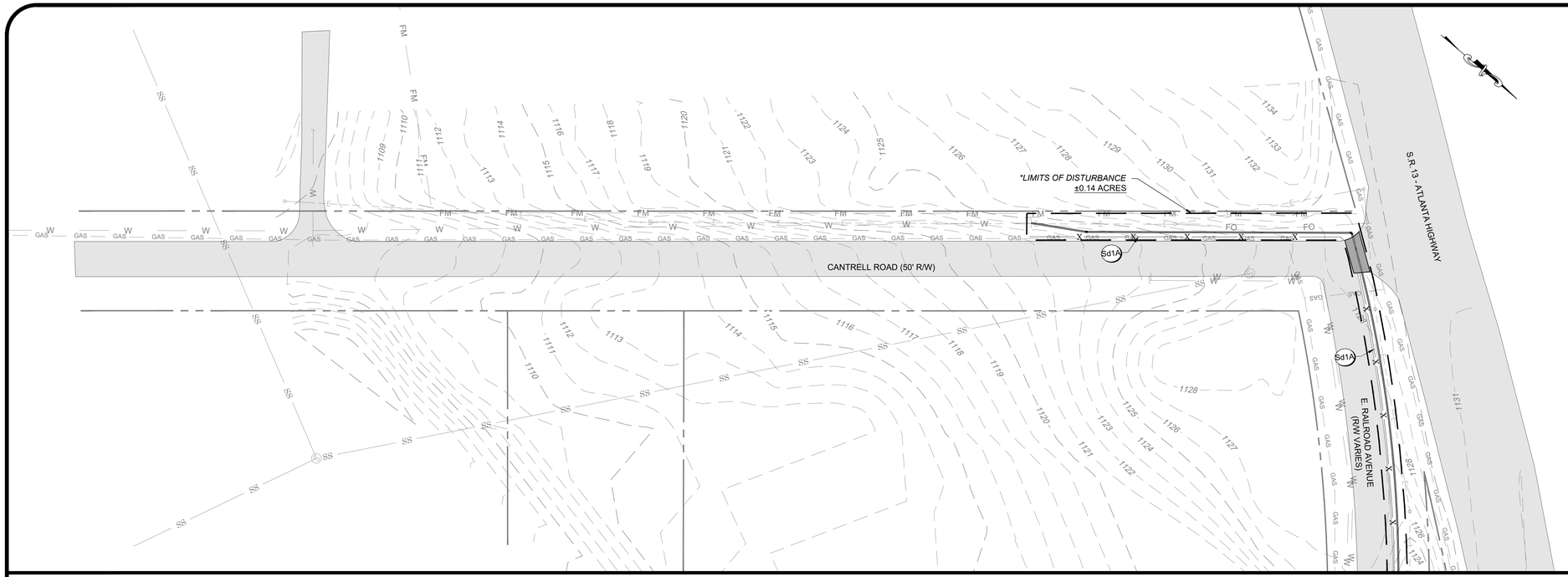

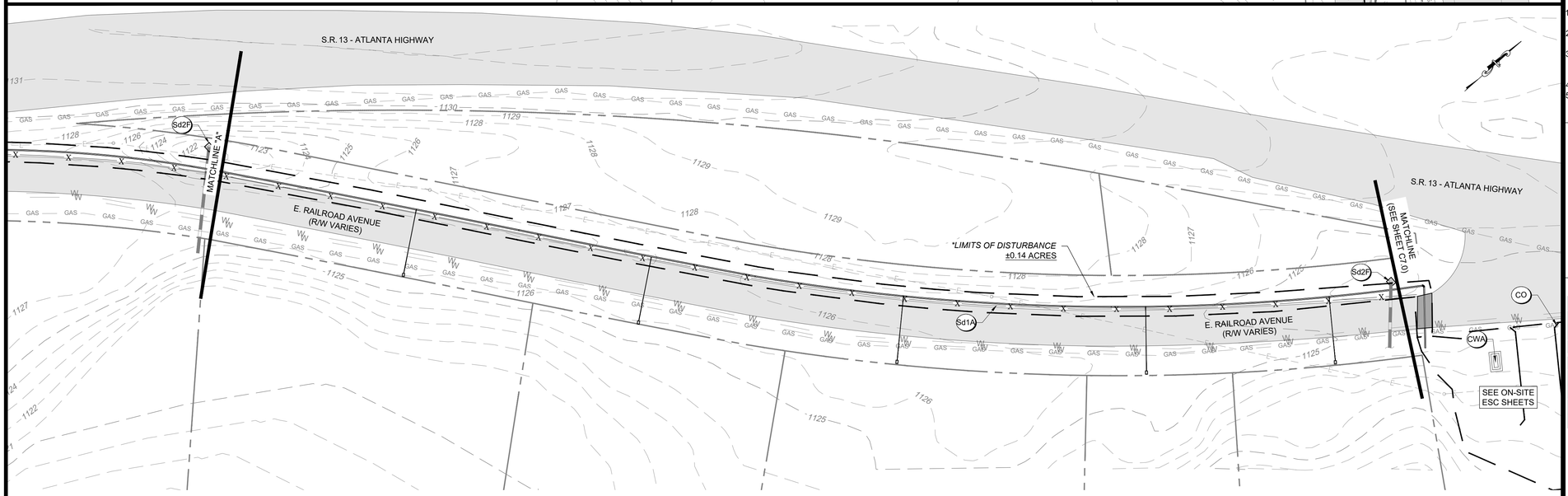

SITE INFORMATION	
PROJECT ADDRESS	4745 ATLANTA HWY
PARCEL NUMBER	08098 001001 THRU 08098 001004
PARCEL ZONING	H-B
PROJECT AREA	2.14 ACRES
BUILDING SETBACK	
FRONT	NONE
REAR	30'
SIDE	10'
LANDSCAPE SETBACK	
FRONT	10'
REAR	30'
SIDE	NONE

EROSION, SEDIMENTATION, & POLLUTION CONTROL STATEMENTS:

1. THE DESIGN PROFESSIONAL WHO PREPARED THE ES&PC PLAN IS TO INSPECT AND CERTIFY THE INSTALLATION OF THE INITIAL SEDIMENT STORAGE REQUIREMENTS AND PERIMETER CONTROL BMPS WITHIN 7 DAYS AFTER INSTALLATION.
2. NON-EXEMPT ACTIVITIES SHALL NOT BE CONDUCTED WITHIN THE 25 OR 50-FOOT UNDISTURBED STREAM BUFFERS AS MEASURED FROM THE POINT OF WRESTED VEGETATION OR WITHIN 25-FEET OF THE COASTAL MARSHLAND BUFFER AS MEASURED FROM THE JURISDICTIONAL DETERMINATION LINE WITHOUT FIRST ACQUIRING THE NECESSARY VARIANCES AND PERMITS.
3. AMENDMENTS/REVISIONS TO THE ES&PC PLAN WHICH HAVE A SIGNIFICANT EFFECT ON BMPS WITH A HYDRAULIC COMPONENT MUST BE CERTIFIED BY THE DESIGN PROFESSIONAL.
4. WASTE MATERIALS SHALL NOT BE DISCHARGED TO WATERS OF THE STATE, EXCEPT AS AUTHORIZED BY A SECTION 404 PERMIT.
5. THE ESCAPE OF SEDIMENT FROM THE SITE SHALL BE PREVENTED BY THE INSTALLATION OF EROSION AND SEDIMENT CONTROL MEASURES AND PRACTICES PRIOR TO LAND DISTURBING ACTIVITIES.
6. EROSION CONTROL MEASURES WILL BE MAINTAINED AT ALL TIMES. IF FULL IMPLEMENTATION OF THE APPROVED PLAN DOES NOT PROVIDE FOR EFFECTIVE EROSION CONTROL, ADDITIONAL EROSION AND SEDIMENT CONTROL MEASURES SHALL BE IMPLEMENTED TO CONTROL OR TREAT THE SEDIMENT SOURCE.
7. ANY DISTURBED AREA LEFT EXPOSED FOR A PERIOD GREATER THAN 14 DAYS SHALL BE STABILIZED WITH MULCH OR TEMPORARY SEEDING.

INITIAL EROSION & SEDIMENTATION CONTROL NOTES:

1. THE CONTRACTOR SHALL INSTALL ALL PERIMETER CONTROL BMPS AND CONSTRUCTION EXIT PRIOR TO ANY LAND DISTURBING ACTIVITIES.
2. THE CONTRACTOR SHALL PROVIDE DUST CONTROL FOR THE PROJECT AREA AS NEEDED BASED ON PROJECT CONDITIONS.
3. THE CONTRACTOR SHALL PERFORM DAILY INSPECTIONS / MAINTENANCE OF ALL EROSION CONTROL BMPS. SEDIMENT LADEN RUNOFF SHALL BE CONTAINED AND TREATED ON SITE.
4. THE TOTAL ON-SITE DISTURBED AREA FOR THE INITIAL PHASE IS 0.24 ACRES.
5. THE TOTAL PROJECT DISTURBED AREA (INCLUDING ON-SITE AREAS) IS 1.10 ACRES.

SEDIMENT STORAGE CALCULATIONS:

REQUIRED SEDIMENT STORAGE:
67 CUBIC YARD PER ACRE DRAINED = 67 CY/AC * 1.10 AC = 74.0 CY

PROVIDED SILT FENCE: 670 LF TYPE C SILT FENCE & 1,030 LF TYPE A
PROVIDED SEDIMENT STORAGE (Sd1): 3.75 SF*670 LF + 1.88 SF*1,030 LF = 118.0 CY

THE TOTAL REQUIRED SEDIMENT STORAGE FOR THE INTERMEDIATE PHASE IS 74.0 CY. THE SEDIMENT STORAGE WILL BE PROVIDED BY THE SILT FENCE (Sd1) AND ROCK FILTER OUTLETS.

STRUCTURAL PRACTICES

CODE	PRACTICE	DETAIL	MAP SYMBOL	DESCRIPTION
Co	CONSTRUCTION EXIT			A crushed stone pad located at the construction site exit to provide a place for removing mud from tires thereby protecting public streets.
CWA	CONCRETE WASHOUT AREA			A washdown area for tools, concrete mixer chutes, hoppers and rear of vehicles.
Sd1	SEDIMENT BARRIER			A barrier to prevent sediment from leaving the construction site. It may be sandbags, bales of straw or hay, brush, logs and poles, gravel, or a silt fence.
Sd2	INLET SEDIMENT TRAP			A temporary protective device formed at or around an inlet to a storm drain to trap sediment.

* DISTURBED AREA NOTES

1. THE TOTAL PROJECT SITE IS 2.14 ACRES.
2. THE TOTAL ON-SITE DISTURBED AREA IS 0.86 ACRES (WELL SITE PROJECT).
3. THE TOTAL OFF-SITE DISTURBED AREA IS 0.24 ACRES (WATER MAIN EXTENSION.
4. THE TOTAL PROJECT DISTURBED AREA (INCLUDING ON- AND OFF-SITE AREAS) IS 1.10 ACRES.
5. DUE TO THE PROPOSED ESC/BMP MEASURES AND THE TYPE OF CONSTRUCTION BEING LINEAR, SHALLOW TRENCHING WORK, THE 0.24 ACRES OF "OFF-SITE" AREA IS NOT BEING CONSIDERED AS PART OF THE ON-SITE HYDROLOGY ANALYSIS DUE TO THE INFINITE NUMBER OF FLOW PATHS FOR RUNOFF LEAVING THE LINEAR AREAS OF THE PROJECT. THEREFORE, THE TRUE "ON-SITE" DISTURBED AREA IS ONLY 0.86 ACRES AND DOES NOT REQUIRE WATER QUALITY MITIGATION.

IMPERVIOUS AREA CALCULATIONS:

PROJECT SITE: 2.14 AC - 0.70 AC (BUFFERS) = **1.44 AC**
DISTURBED AREA (ON SITE): 0.86 AC
IMPERVIOUS AREA = 1400 SF -> 0.032 AC / 1.44 AC = **2.2%**

DISTURBED AREA (OFF SITE): 0.24 AC -> **NO IMPERVIOUS AREA**

<50% GOOD
<15% GOOD

NRCS WEB SOIL SURVEY

SYMBOL	NAME	HYDROLOGIC SOIL GROUP	UNIFIED SOIL CLASSIFICATION	DEPTH
ApC	APPLING SANDY LOAM	B	Ap	0"-8"
			BA	8"-15"
			Bt	15"-42"
			BC	42"-55"
			C	55"-60"
PuD2	PACOLET SOILS	B	H1	0"-3"
			H2	3"-29"
			H3	29"-52"
			H4	52"-70"

APPENDIX 1 - IMPAIRED STREAM BMPS:

1. REDUCE THE TOTAL PLANNED SITE DISTURBANCE TO LESS THAN 50% IMPERVIOUS SURFACES (EXCLUDING ANY STATE-MANDATED BUFFER AREAS FROM SUCH CALCULATIONS). ALL CALCULATIONS MUST BE INCLUDED ON THE PLAN.
2. CONTRACTOR SHALL PROVIDE A LARGE (4'x8'), DURABLE, WEATHERPROOF SIGN ON SITE AT THE CONSTRUCTION ENTRANCE IN ACCORDANCE WITH APPENDIX 1, ITEM "D" ON SHEET C7.0 (SEE SIGN DETAIL ON SHEET C7.1).
3. USE FLOCCULENTS OR COAGULANTS AND/OR MULCH TO STABILIZE AREAS LEFT DISTURBED FOR MORE THAN SEVEN (7) CALENDAR DAYS IN ACCORDANCE WITH PART III D.1 OF THE CURRENT NPDES PERMITS.
4. LIMIT THE TOTAL PLANNED SITE DISTURBANCE TO LESS THAN 15% IMPERVIOUS SURFACES (EXCLUDING ANY STATE MANDATED BUFFER AREAS FROM SUCH CALCULATIONS). ALL CALCULATIONS MUST BE INCLUDED IN THE PLAN.

GRAPHIC SCALE 1" = 30'

GSWCC GEORGIA SOIL AND WATER CONSERVATION COMMISSION
Delmas S Crisp III
LEVEL II CERTIFIED DESIGN PROFESSIONAL
CERTIFICATION NUMBER: 0000100336
ISSUED: 11/08/2025 EXPIRES: 11/08/2028

GEORGIA811 www.Georgia811.com

ESG ENGINEERING
6400 Peake Rd
Macon, GA 31210
Ph: (478) 474-4996
Fax: (478) 474-5045

GROUNDWATER WELLS #4 & #5

FOR THE
CITY OF FLOWERY BRANCH

REVISIONS NO.	DESCRIPTION	DATE
1	ESPC SHEETS	11-7-25
2	BID SET OF PLANS	12-1-25
3	REVISED WITH CITY COMMENTS	12-5-25
4	ADDENDUM #1	12-8-25
5	ADDENDUM #2	12-11-25
6	ADDENDUM #3	12-12-25
7	REVISED WITH CITY COMMENTS	12-17-25

CONFORMED SET

GEORGIA REGISTERED No. PE046341 PROFESSIONAL ENGINEER ANDREW D SWICEGOOD

DRAWN BY: DSC
CHECKED BY: ADS
DATE: OCT 2025
SCALE: SEE SCALE

CONTENT:

CIVIL:
INITIAL ESPC - WATER MAIN EXTENSION

SHEET NO: 2 3 7

C8.3

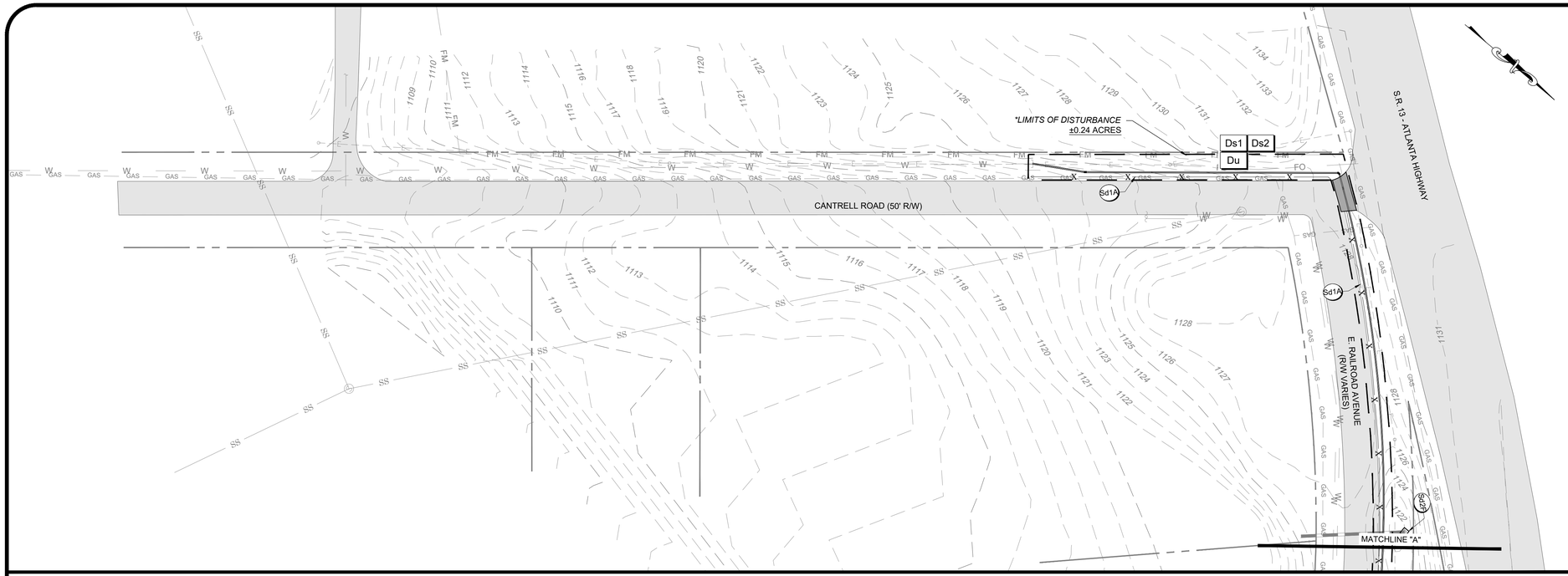

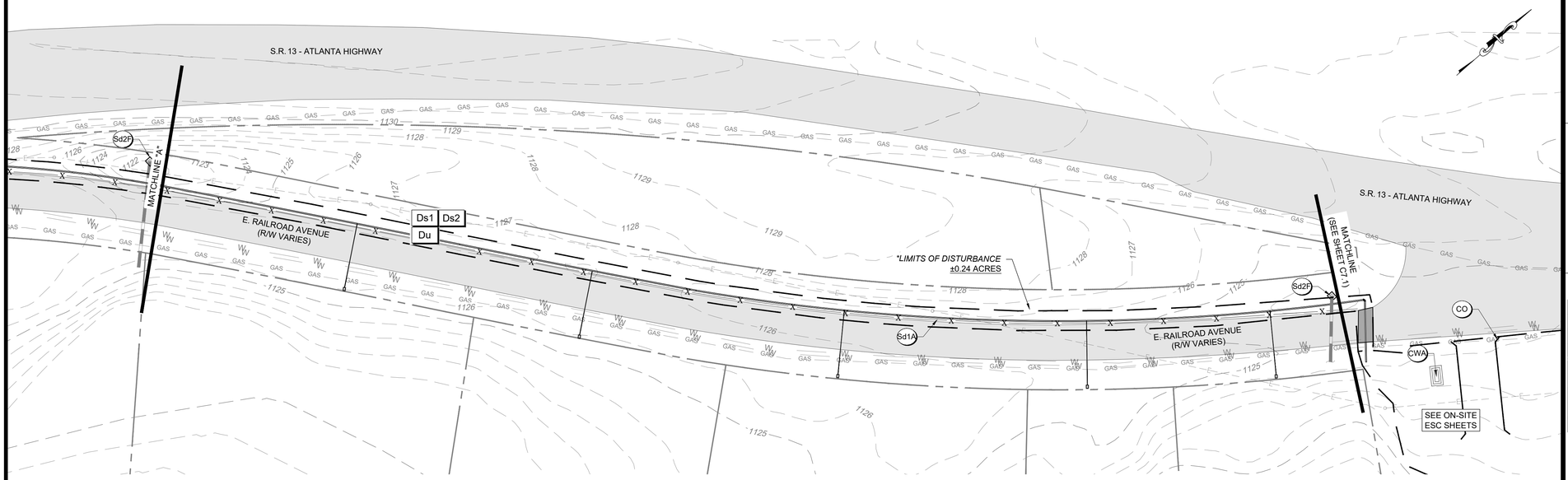

SITE INFORMATION	
PROJECT ADDRESS	4745 ATLANTA HWY
PARCEL NUMBER	08098 001001 THRU 08098 001004
PARCEL ZONING	H-B
PROJECT AREA	2.14 ACRES
BUILDING SETBACK	
FRONT	NONE
REAR	30'
SIDE	10'
LANDSCAPE SETBACK	
FRONT	10'
REAR	30'
SIDE	NONE

EROSION, SEDIMENTATION, & POLLUTION CONTROL STATEMENTS:

1. THE DESIGN PROFESSIONAL WHO PREPARED THE ES&PC PLAN IS TO INSPECT AND CERTIFY THE INSTALLATION OF THE INITIAL SEDIMENT STORAGE REQUIREMENTS AND PERIMETER CONTROL BMPS WITHIN 7 DAYS AFTER INSTALLATION.
2. NON-EXEMPT ACTIVITIES SHALL NOT BE CONDUCTED WITHIN THE 25 OR 50-FOOT UNDISTURBED STREAM BUFFERS AS MEASURED FROM THE POINT OF WRESTED VEGETATION OR WITHIN 25-FEET OF THE COASTAL MARSHLAND BUFFER AS MEASURED FROM THE JURISDICTIONAL DETERMINATION LINE WITHOUT FIRST ACQUIRING THE NECESSARY VARIANCES AND PERMITS.
3. AMENDMENTS/REVISIONS TO THE ES&PC PLAN WHICH HAVE A SIGNIFICANT EFFECT ON BMPS WITH A HYDRAULIC COMPONENT MUST BE CERTIFIED BY THE DESIGN PROFESSIONAL.
4. WASTE MATERIALS SHALL NOT BE DISCHARGED TO WATERS OF THE STATE, EXCEPT AS AUTHORIZED BY A SECTION 404 PERMIT.
5. THE ESCAPE OF SEDIMENT FROM THE SITE SHALL BE PREVENTED BY THE INSTALLATION OF EROSION AND SEDIMENT CONTROL MEASURES AND PRACTICES PRIOR TO LAND DISTURBING ACTIVITIES.
6. EROSION CONTROL MEASURES WILL BE MAINTAINED AT ALL TIMES. IF FULL IMPLEMENTATION OF THE APPROVED PLAN DOES NOT PROVIDE FOR EFFECTIVE EROSION CONTROL, ADDITIONAL EROSION AND SEDIMENT CONTROL MEASURES SHALL BE IMPLEMENTED TO CONTROL OR TREAT THE SEDIMENT SOURCE.
7. ANY DISTURBED AREA LEFT EXPOSED FOR A PERIOD GREATER THAN 14 DAYS SHALL BE STABILIZED WITH MULCH OR TEMPORARY SEEDING.

INTERMEDIATE EROSION & SEDIMENTATION CONTROL NOTES:

1. CONTRACTOR SHALL INSTALL CONCRETE WASH AREA. CONCRETE WASH AREA SHALL BE USED FOR WASHDOWN OF TOOLS, CONCRETE MIXER CHUTES, HOPPERS AND REAR OF THE VEHICLES ONLY. WASHOUT OF THE DRUM AT THE CONSTRUCTION SITE IS PROHIBITED.
2. THE CONTRACTOR SHALL PROVIDE DUST CONTROL FOR THE PROJECT AREA AS NEEDED BASED ON PROJECT CONDITIONS.
3. THE CONTRACTOR SHALL PERFORM DAILY INSPECTIONS / MAINTENANCE OF ALL EROSION CONTROL BMPS. SEDIMENT LADEN RUNOFF SHALL BE CONTAINED AND TREATED ON SITE.
4. THE PRIMARY PERMITTEE WILL RETAIN ESG (THE DESIGN PROFESSIONAL) DURING ALL PHASES OF ESPC.
4. THE TOTAL ON-SITE DISTURBED AREA FOR THE INITIAL PHASE IS 0.24 ACRES.
5. THE TOTAL PROJECT DISTURBED AREA (INCLUDING ON-SITE AREAS) IS 1.10 ACRES.

SEDIMENT STORAGE CALCULATIONS:

REQUIRED SEDIMENT STORAGE:
67 CUBIC YARD PER ACRE DRAINED = 67 CY/AC * 1.10 AC = 74.0 CY

PROVIDED SILT FENCE: 670 LF TYPE C SILT FENCE & 1,030 LF TYPE A
PROVIDED SEDIMENT STORAGE (Sd1): 3.75 SF*670 LF + 1.88 SF*1,030 LF = 118.0 CY

THE TOTAL REQUIRED SEDIMENT STORAGE FOR THE INTERMEDIATE PHASE IS 74.0 CY. THE SEDIMENT STORAGE WILL BE PROVIDED BY THE SILT FENCE (Sd1).

STRUCTURAL PRACTICES

CODE	PRACTICE	DETAIL	MAP SYMBOL	DESCRIPTION
Co	CONSTRUCTION EXIT			A crushed stone pad located at the construction site exit to provide a place for removing mud from tires thereby protecting public streets.
CWA	CONCRETE WASHOUT AREA			A washdown area for tools, concrete mixer chutes, hoppers and rear of vehicles.
Sd1	SEDIMENT BARRIER			A barrier to prevent sediment from leaving the construction site. It may be sandbags, bales of straw or hay, brush, logs and poles, gravel, or a silt fence.
Sd2	INLET SEDIMENT TRAP			A temporary protective device formed at or around an inlet to a storm drain to trap sediment.

VEGETATIVE PRACTICES

CODE	PRACTICE	DETAIL	MAP SYMBOL	DESCRIPTION
Du	DUST CONTROL ON DISTURBED AREAS		Du	Controlling surface and air movement of dust on construction site, roadways and similar sites.
Ds1	DISTURBED AREA STABILIZATION (WITH MULCHING ONLY)		Ds1	Establishing temporary protection for disturbed areas where seedlings may not have a suitable growing season to produce an erosion retarding cover.
Ds2	DISTURBED AREA STABILIZATION (WITH TEMP. SEEDING)		Ds2	Establishing a temporary vegetative cover with fast growing seedings on disturbed areas.

* DISTURBED AREA NOTES

1. THE TOTAL PROJECT SITE IS 2.14 ACRES.
2. THE TOTAL ON-SITE DISTURBED AREA IS 0.86 ACRES (WELL SITE PROJECT).
3. THE TOTAL OFF-SITE DISTURBED AREA IS 0.24 ACRES (WATER MAIN EXTENSION).
4. THE TOTAL PROJECT DISTURBED AREA (INCLUDING ON- AND OFF-SITE AREAS) IS 1.10 ACRES.
5. DUE TO THE PROPOSED ESC/BMP MEASURES AND THE TYPE OF CONSTRUCTION BEING LINEAR, SHALLOW TRENCHING WORK, THE 0.24 ACRES OF "OFF-SITE" AREA IS NOT BEING CONSIDERED AS PART OF THE ON-SITE HYDROLOGY ANALYSIS DUE TO THE INFINITE NUMBER OF FLOW PATHS FOR RUNOFF LEAVING THE LINEAR AREAS OF THE PROJECT. THEREFORE, THE TRUE "ON-SITE" DISTURBED AREA IS ONLY 0.86 ACRES AND DOES NOT REQUIRE WATER QUALITY MITIGATION.

Ds1 | Ds2
Du
ALL DISTURBED AREAS

IMPERVIOUS AREA CALCULATIONS:

PROJECT SITE: 2.14 AC - 0.70 AC (BUFFERS) = **1.44 AC**
DISTURBED AREA (ON SITE): 0.86 AC
IMPERVIOUS AREA = 1400 SF -> 0.032 AC / 1.44 AC = **2.2%**

DISTURBED AREA (OFF SITE): 0.24 AC -> **NO IMPERVIOUS AREA**

<50% GOOD
<15% GOOD

NRCS WEB SOIL SURVEY

SYMBOL	NAME	HYDROLOGIC SOIL GROUP	UNIFIED SOIL CLASSIFICATION	DEPTH
ApC	APPLING SANDY LOAM	B	Ap	0"-8"
			BA	8"-15"
			Bt	15"-42"
			BC	42"-55"
			C	55"-60"
PuD2	PACOLET SOILS	B	H1	0"-3"
			H2	3"-29"
			H3	29"-52"
			H4	52"-70"

APPENDIX 1 - IMPAIRED STREAM BMPS:

1. REDUCE THE TOTAL PLANNED SITE DISTURBANCE TO LESS THAN 50% IMPERVIOUS SURFACES (EXCLUDING ANY STATE-MANDATED BUFFER AREAS FROM SUCH CALCULATIONS). ALL CALCULATIONS MUST BE INCLUDED ON THE PLAN.
2. CONTRACTOR SHALL PROVIDE A LARGE (4'x8'), DURABLE, WEATHERPROOF SIGN ON SITE AT THE CONSTRUCTION ENTRANCE IN ACCORDANCE WITH APPENDIX 1, ITEM "D" ON SHEET C7.0 (SEE SIGN DETAIL ON SHEET C7.1).
3. USE FLOCCULENTS OR COAGULANTS AND/OR MULCH TO STABILIZE AREAS LEFT DISTURBED FOR MORE THAN SEVEN (7) CALENDAR DAYS IN ACCORDANCE WITH PART III D.1 OF THE CURRENT NPDES PERMITS.
4. LIMIT THE TOTAL PLANNED SITE DISTURBANCE TO LESS THAN 15% IMPERVIOUS SURFACES (EXCLUDING ANY STATE MANDATED BUFFER AREAS FROM SUCH CALCULATIONS). ALL CALCULATIONS MUST BE INCLUDED IN THE PLAN.

30' 15' 0' 30'
GRAPHIC SCALE 1" = 30'

GSWCC GEORGIA SOIL AND WATER CONSERVATION COMMISSION
Delmas S Crisp III
LEVEL II CERTIFIED DESIGN PROFESSIONAL
CERTIFICATION NUMBER: 0000100336
ISSUED: 11/08/2025 EXPIRES: 11/08/2028

GEORGIA811 www.Georgia811.com

ESG ENGINEERING
6400 Peake Rd
Macon, GA 31210
Ph: (478) 474-4996
Fax: (478) 474-5045

GROUNDWATER WELLS #4 & #5

FOR THE
CITY OF FLOWERY BRANCH

REVISIONS

NO.	DESCRIPTION	DATE
1	ESPC SHEETS	11-7-25
2	BID SET OF PLANS	12-1-25
3	REVISED WITH CITY COMMENTS	12-5-25
4	ADDENDUM #1	12-8-25
5	ADDENDUM #2	12-11-25
6	ADDENDUM #3	12-12-25
7	REVISED WITH CITY COMMENTS	12-17-25

CONFORMED SET

GEORGIA REGISTERED No. PE046341 PROFESSIONAL ENGINEER ANDREW D SWICEGOOD

DRAWN BY: DSC
CHECKED BY: ADS
DATE: OCT 2025
SCALE: SEE SCALE

CONTENT:

CIVIL:
INTERMEDIATE ESCP - WATER MAIN EXTENSION

SHEET NO: 23 7
C8.4

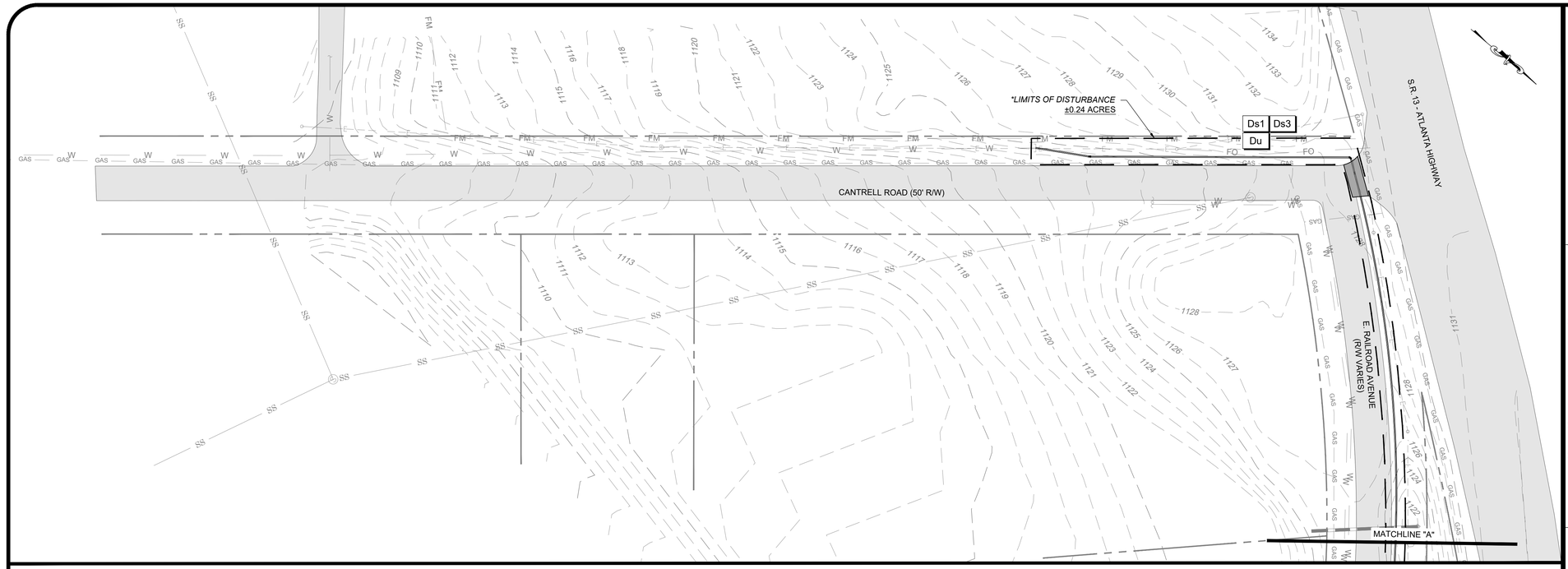

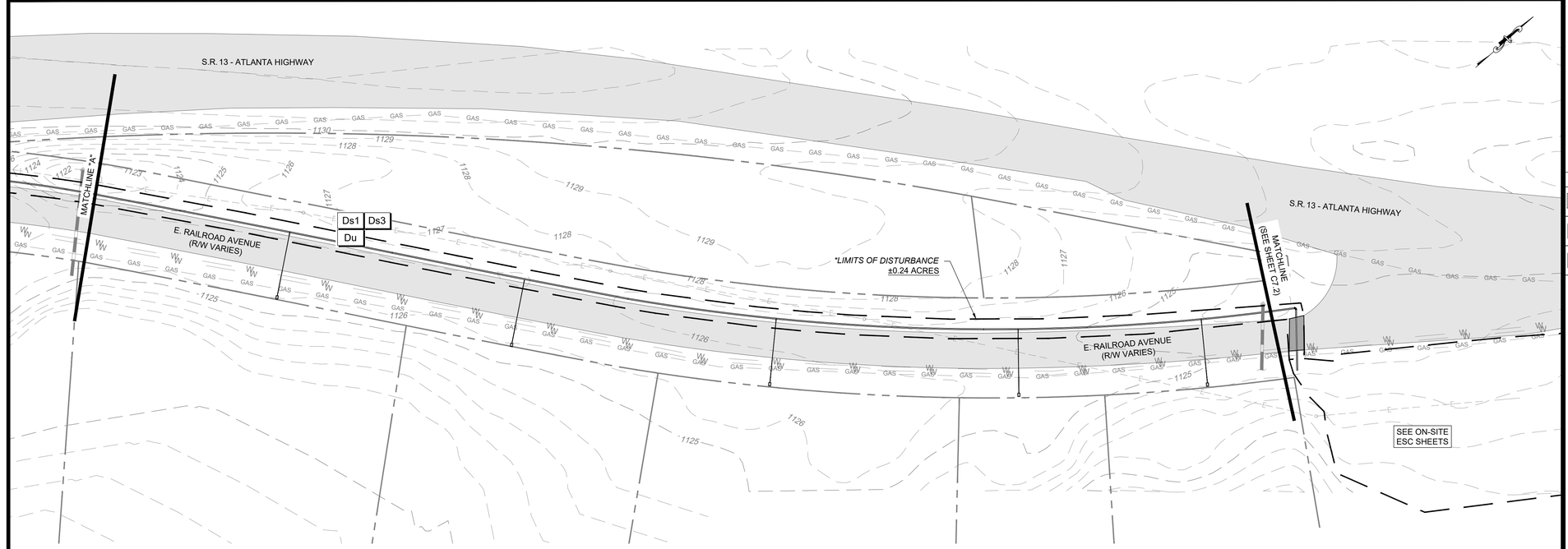

SITE INFORMATION	
PROJECT ADDRESS	4745 ATLANTA HWY
PARCEL NUMBER	08098 001001 THRU 08098 001004
PARCEL ZONING	H-B
PROJECT AREA	2.14 ACRES
BUILDING SETBACK	
FRONT	NONE
REAR	30'
SIDE	10'
LANDSCAPE SETBACK	
FRONT	10'
REAR	30'
SIDE	NONE

EROSION, SEDIMENTATION, & POLLUTION CONTROL STATEMENTS:

1. THE DESIGN PROFESSIONAL WHO PREPARED THE ES&PC PLAN IS TO INSPECT AND CERTIFY THE INSTALLATION OF THE INITIAL SEDIMENT STORAGE REQUIREMENTS AND PERIMETER CONTROL BMPS WITHIN 7 DAYS AFTER INSTALLATION.
2. NON-EXEMPT ACTIVITIES SHALL NOT BE CONDUCTED WITHIN THE 25 OR 50-FOOT UNDISTURBED STREAM BUFFERS AS MEASURED FROM THE POINT OF WRESTED VEGETATION OR WITHIN 25-FEET OF THE COASTAL MARSHLAND BUFFER AS MEASURED FROM THE JURISDICTIONAL DETERMINATION LINE WITHOUT FIRST ACQUIRING THE NECESSARY VARIANCES AND PERMITS.
3. AMENDMENTS/REVISIONS TO THE ES&PC PLAN WHICH HAVE A SIGNIFICANT EFFECT ON BMPS WITH A HYDRAULIC COMPONENT MUST BE CERTIFIED BY THE DESIGN PROFESSIONAL.
4. WASTE MATERIALS SHALL NOT BE DISCHARGED TO WATERS OF THE STATE, EXCEPT AS AUTHORIZED BY A SECTION 404 PERMIT.
5. THE ESCAPE OF SEDIMENT FROM THE SITE SHALL BE PREVENTED BY THE INSTALLATION OF EROSION AND SEDIMENT CONTROL MEASURES AND PRACTICES PRIOR TO LAND DISTURBING ACTIVITIES.
6. EROSION CONTROL MEASURES WILL BE MAINTAINED AT ALL TIMES. IF FULL IMPLEMENTATION OF THE APPROVED PLAN DOES NOT PROVIDE FOR EFFECTIVE EROSION CONTROL, ADDITIONAL EROSION AND SEDIMENT CONTROL MEASURES SHALL BE IMPLEMENTED TO CONTROL OR TREAT THE SEDIMENT SOURCE.
7. ANY DISTURBED AREA LEFT EXPOSED FOR A PERIOD GREATER THAN 14 DAYS SHALL BE STABILIZED WITH MULCH OR TEMPORARY SEEDING.

FINAL EROSION & SEDIMENTATION CONTROL NOTES:

1. CONTRACTOR SHALL INSTALL CONCRETE WASH AREA. CONCRETE WASH AREA SHALL BE USED FOR WASHDOWN OF TOOLS, CONCRETE MIXER CHUTES, HOPPERS AND REAR OF THE VEHICLES ONLY. WASHOUT OF THE DRUM AT THE CONSTRUCTION SITE IS PROHIBITED.
2. THE CONTRACTOR SHALL REMOVE ALL TEMPORARY BMPS ONCE FINAL STABILIZATION HAS BEEN MET.
3. THE CONTRACTOR SHALL PERFORM DAILY INSPECTIONS / MAINTENANCE OF ALL EROSION CONTROL BMPS. SEDIMENT LADEN RUNOFF SHALL BE CONTAINED AND TREATED ON SITE.
4. THE PRIMARY PERMITTEE WILL RETAIN THE DESIGN PROFESSIONAL DURING THE INTERMEDIATE GRADING AND DRAINAGE BMP PHASE, AS WELL AS THE FINAL BMP PHASE.
4. THE TOTAL ON-SITE DISTURBED AREA FOR THE INITIAL PHASE IS 0.24 ACRES.
5. THE TOTAL PROJECT DISTURBED AREA (INCLUDING ON-SITE AREAS) IS 1.10 ACRES.

VEGETATIVE PRACTICES

CODE	PRACTICE	DETAIL	MAP SYMBOL	DESCRIPTION
Ds1	DISTURBED AREA STABILIZATION (WITH MULCHING ONLY)		Ds1	Establishing temporary protection for disturbed areas where seedlings may not have a suitable growing season to produce an erosion retarding cover.
Ds3	DISTURBED AREA STABILIZATION (WITH PERM.SEEDING)		Ds3	Establishing a permanent vegetative cover such as trees, shrubs, vines, grasses, or legumes on disturbed areas.
Du	DUST CONTROL ON DISTURBED AREAS		Du	Controlling surface and air movement of dust on construction site, roadways and similar sites.

* DISTURBED AREA NOTES

1. THE TOTAL PROJECT SITE IS 2.14 ACRES.
2. THE TOTAL ON-SITE DISTURBED AREA IS 0.86 ACRES (WELL SITE PROJECT).
3. THE TOTAL OFF-SITE DISTURBED AREA IS 0.24 ACRES (WATER MAIN EXTENSION.
4. THE TOTAL PROJECT DISTURBED AREA (INCLUDING ON- AND OFF-SITE AREAS) IS 1.10 ACRES.
5. DUE TO THE PROPOSED ESC/BMP MEASURES AND THE TYPE OF CONSTRUCTION BEING LINEAR, SHALLOW TRENCHING WORK, THE 0.24 ACRES OF "OFF-SITE" AREA IS NOT BEING CONSIDERED AS PART OF THE ON-SITE HYDROLOGY ANALYSIS DUE TO THE INFINITE NUMBER OF FLOW PATHS FOR RUNOFF LEAVING THE LINEAR AREAS OF THE PROJECT. THEREFORE, THE TRUE "ON-SITE" DISTURBED AREA IS ONLY 0.86 ACRES AND DOES NOT REQUIRE WATER QUALITY MITIGATION.

Ds1 Ds3
Du
ALL DISTURBED AREAS

IMPERVIOUS AREA CALCULATIONS:

PROJECT SITE: 2.14 AC - 0.70 AC (BUFFERS) = **1.44 AC**
DISTURBED AREA (ON SITE): 0.86 AC
IMPERVIOUS AREA = 1400 SF -> 0.032 AC / 1.44 AC = **2.2%**

DISTURBED AREA (OFF SITE): 0.24 AC -> **NO IMPERVIOUS AREA**

<50% GOOD
<15% GOOD

NRCS WEB SOIL SURVEY

SYMBOL	NAME	HYDROLOGIC SOIL GROUP	UNIFIED SOIL CLASSIFICATION	DEPTH
ApC	APPLING SANDY LOAM	B	Ap	0"-8"
			BA	8"-15"
			Bt	15"-42"
			BC	42"-55"
			C	55"-60"
PuD2	PACOLET SOILS	B	H1	0"-3"
			H2	3"-29"
			H3	29"-52"
			H4	52"-70"

APPENDIX 1 - IMPAIRED STREAM BMPS:

1. REDUCE THE TOTAL PLANNED SITE DISTURBANCE TO LESS THAN 50% IMPERVIOUS SURFACES (EXCLUDING ANY STATE-MANDATED BUFFER AREAS FROM SUCH CALCULATIONS). ALL CALCULATIONS MUST BE INCLUDED ON THE PLAN.
2. CONTRACTOR SHALL PROVIDE A LARGE (4'x8'), DURABLE, WEATHERPROOF SIGN ON SITE AT THE CONSTRUCTION ENTRANCE IN ACCORDANCE WITH APPENDIX 1, ITEM "D" ON SHEET C7.0 (SEE SIGN DETAIL ON SHEET C7.1).
3. USE FLOCCULENTS OR COAGULANTS AND/OR MULCH TO STABILIZE AREAS LEFT DISTURBED FOR MORE THAN SEVEN (7) CALENDAR DAYS IN ACCORDANCE WITH PART III D.1 OF THE CURRENT NPDES PERMITS.
4. LIMIT THE TOTAL PLANNED SITE DISTURBANCE TO LESS THAN 15% IMPERVIOUS SURFACES (EXCLUDING ANY STATE MANDATED BUFFER AREAS FROM SUCH CALCULATIONS). ALL CALCULATIONS MUST BE INCLUDED IN THE PLAN.

30' 15' 0' 30'
GRAPHIC SCALE 1" = 30'

GSWCC GEORGIA SOIL AND WATER CONSERVATION COMMISSION
Delmas S Crisp III
LEVEL II CERTIFIED DESIGN PROFESSIONAL
CERTIFICATION NUMBER: 0000100336
ISSUED: 11/08/2025 EXPIRES: 11/08/2028

GEORGIA811 www.Georgia811.com

ESG ENGINEERING
6400 Peake Rd
Macon, GA 31210
Ph: (478) 474-4996
Fax: (478) 474-5045

GROUNDWATER WELLS #4 & #5

FOR THE
CITY OF FLOWERY BRANCH

REVISIONS

NO.	DESCRIPTION	DATE
1	ESPC SHEETS	11-7-25
2	BID SET OF PLANS	12-1-25
3	REVISED WITH CITY COMMENTS	12-5-25
4	ADDENDUM #1	12-8-25
5	ADDENDUM #2	12-11-25
6	ADDENDUM #3	12-12-25
7	REVISED WITH CITY COMMENTS	12-17-25

CONFORMED SET

GEORGIA REGISTERED No. PE046341 PROFESSIONAL ENGINEER ANDREW D SWICEGOOD

DRAWN BY: DSC
CHECKED BY: ADS
DATE: OCT 2025
SCALE: SEE SCALE

CONTENT:

CIVIL:
FINAL ESCP - WATER MAIN EXTENSION

SHEET NO: 2 3 7
C8.5

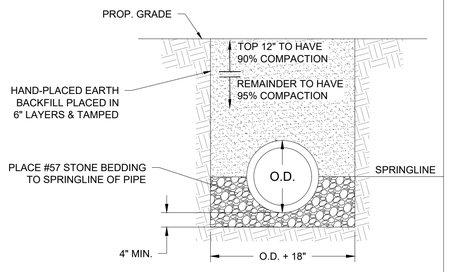

NOTES:

1. WHEN POOR BEDDING SOIL IS ENCOUNTERED, REMOVE UNSUITABLE SOIL TO REQUIRED DEPTH AND BACKFILL WITH AN APPROVED AGGREGATE MATERIAL PRIOR TO LAYING PIPE. BACKFILL SHALL BE PLACED IN 6" LIFTS WITH EACH LAYER TAMPED TO 95% COMPACTION.
2. TRENCH SHALL BE EXCAVATED TO THE DEPTH REQUIRED, PROVIDING A UNIFORM AND CONTINUOUS BEARING AND SUPPORT FOR THE PIPE ON SOLID, UNDISTURBED GROUND AT EVERY POINT.
3. IN PERVIOUS AREAS (SUCH AS ROAD SHOULDERS) EXTEND BACKFILL TO SURFACE AND PLACE SEEDING/GRASSING. SEE PAVEMENT REPLACEMENT DETAIL FOR INSTALLATION UNDER PAVEMENT.

TYPICAL PIPE BEDDING & BACKFILL DETAIL
NOT TO SCALE

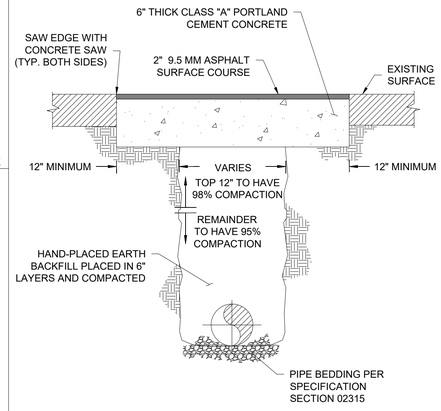

PAVEMENT REPLACEMENT DETAIL
NOT TO SCALE

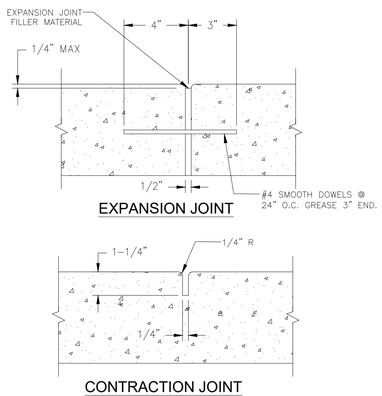

NOTES:

1. CONTRACTION JOINTS SHALL BE REQUIRED IN THE CONCRETE SIDEWALK AT 5' INTERVALS.

CONCRETE CONSTRUCTION JOINT DETAIL
NOT-TO-SCALE

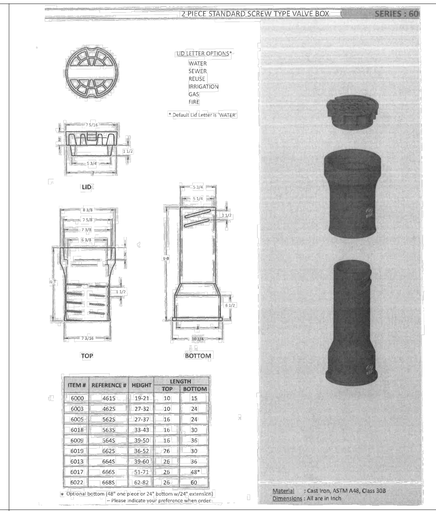

ITEM #	REFERENCE #	HEIGHT	LENGTH	
			TOP	BOTTOM
6000	4615	19-21	10	15
6003	4625	27-32	10	24
6005	5625	27-37	16	24
6018	5635	33-43	16	30
6009	5645	39-50	16	36
6015	6625	36-52	76	30
6013	6645	59-60	28	36
6017	6665	51-71	28	48"
6027	6685	62-82	26	60

* Optional bottom (48" one piece or 24" bottom w/24" extension) - Please indicate your preference when order.

VALVE RISER DETAIL
NOT-TO-SCALE

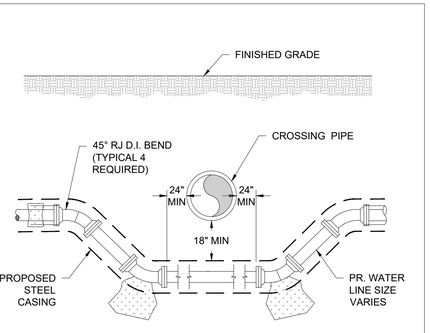

NOTES:

1. ALL FITTINGS SHALL BE PROPERLY BLOCKED OR TIE-RODDED AS REQUIRED TO ENSURE SUFFICIENT ANCHORAGE OF THE PIPING.
2. PROVIDE SUFFICIENT BACKFILL AND COMPACTION OVER WATER LINE TO ENSURE PROTECTION OF THE PIPE.

WATER LINE CONFLICT DETAIL
NOT TO SCALE

BOLLARD DETAIL
NOT TO SCALE

SERVICE CONNECTION DETAIL
NOT TO SCALE

GRAVEL SITE PAD & ACCESS DRIVE
NOT TO SCALE

SANITARY SEWER CLEANOUT DETAIL
NOT TO SCALE

2'-0" STANDARD CURB & GUTTER

1'-6" PLANTED CURB

TO BE USED WHEN SEPARATING DIFFERENT TYPES OF SURFACES OR PAVING TYPES AS SPECIFIED BY THE ENGINEER.

CURB AND GUTTER DETAILS
NOT TO SCALE

TIE ROD SCHEDULE		
PIPE DIAMETER (IN.)	TIE RODS DIAMETER (IN.)	NUMBER REQUIRED
3	3/4	2
4	3/4	2
6	3/4	3
8	3/4	3
10	3/4	4
12	3/4	4

DEADMAN THRUST BLOCK DETAIL
NOT TO SCALE

1. THRUST BLOCK BEARING AREAS SHALL BE POURED AGAINST UNDISTURBED MATERIALS WHERE TRENCH WALL HAS BEEN DISTURBED, EXCAVATE ALL LOOSE MATERIAL AND EXTEND TO UNDISTURBED MATERIAL.
2. EXTEND THRUST BLOCK FULL LENGTH OF FITTINGS. PUT BOARD IN FRONT OF PLUG BEFORE POURING CONCRETE. JOINTS SHALL NOT BE COVERED BY THRUST BLOCK.
3. ROUGH BLOCKING FORMS SHALL BE USED ALONG SIDES OF THRUST BLOCK.
4. THRUST BLOCKS SHALL BE USED IN COMBINATION, AS REQUIRED, TO SUIT THE SPECIFIC FITTINGS ARRANGEMENT.
5. ALTERNATE DESIGN RESTRAINING SYSTEM SHALL BE PROVIDED WHERE STANDARD THRUST BLOCKING IS NOT SUITABLE, AND/OR SOIL BEARING CAPACITY IS LESS THAN 2,000 P.S.F. OR PIPE IS 16 INCHES OR GREATER.
6. ALL WOOD BLOCKING SHALL BE PRESSURE TREATED WITH PRESERVATIVES.
7. THRUST BLOCK AND RESTRAINING SEWER AND WATER MAIN SCHEDULES SHALL BE COMPLETED BY THE ENGINEER, BASED ON ALL DESIGN CONSIDERATIONS INCLUDING, BUT NOT LIMITED TO THE FOLLOWING: PIPE TYPE, SOIL BEARING CAPACITY, SOIL TYPE, DEPTH OF COVER, TEST PRESSURE, LAYING CONDITIONS AND SAFETY FACTOR.
8. STEEL REINFORCEMENT FOR "DEAD-MAN" SHALL BE DETERMINED BY ENGINEER.
9. CONCRETE THRUST BLOCKING SHALL HAVE A MIN. COMPRESSION STRENGTH OF 2500 PSI.
10. CONCRETE SHALL BE PLACED AGAINST UNDISTURBED MATERIAL AND SHALL NOT COVER JOINTS, BOLTS OR NUTS OR INTERFERE WITH REMOVAL OF ANY JOINT. WOODEN SIDE FORMS SHALL BE PROVIDED FOR THRUST BLOCKS WHERE TRENCH CONDITIONS REQUIRE.
11. THRUST BLOCKS SHALL BE PROPERLY SET AND ADEQUATELY CURED PRIOR TO PRESSURIZING THE PIPE.
12. FITTINGS SHALL BE PROTECTED BY POLYETHYLENE FILM, MIN. 8 MIL. THICK, PRIOR TO PLACING CONCRETE THRUST BLOCK.

ANGLE	BENDS X	C	D	TEES AND DEAD ENDS X	C	D
90°	4"	6"	1'-2"	4"	8"	1'-6"
	6"	8"	1'-10"	6"	10"	1'-9"
	8"	9"	2'-4"	8"	12"	2'-0"
	10"	11"	3'-0"	10"	14"	2'-6"
	12"	12"	3'-6"	12"	16"	3'-0"
45°	4"	6"	1'-0"			
	6"	8"	1'-4"			
	8"	9"	1'-10"			
	10"	11"	2'-2"			
	12"	12"	2'-8"			
22-1/2°	4"	6"	1'-0"			
	6"	8"	1'-0"			
	8"	9"	1'-4"			
	10"	11"	1'-8"			
	12"	12"	1'-10"			
11-1/4°	4"	6"	1'-0"			
	6"	8"	1'-0"			
	8"	9"	1'-0"			
	10"	11"	1'-2"			
	12"	12"	1'-4"			

CONCRETE THRUST BLOCK DETAIL
NOT TO SCALE

ESG ENGINEERING
6400 Peake Rd
Macon, GA 31210
Ph: (478) 474-4996
Fax: (478) 474-5045

GROUNDWATER WELLS #4 & #5

FOR THE

CITY OF FLOWERY BRANCH

REVISIONS

NO.	DESCRIPTION	DATE
1	ESPC SHEETS	11-7-25
2	REVISED WITH CITY COMMENTS	12-1-25

CONFORMED SET

GEORGIA REGISTERED PROFESSIONAL ENGINEER No. PE046341 ANDREW D SWICEGOOD

DRAWN BY: DSC
CHECKED BY: ADS
DATE: OCT 2025
SCALE: N.T.S.

CONTENT:

CONSTRUCTION DETAILS

SHEET NO:

C9.0

Last Saved By: Eleonard
Plotted: 12/2/2025 9:21 AM
Drawing Path: Z:\Engineer Projects\F0002 - FLOWERY BRANCH, CITY OF\Fxxxx.xxx Groundwater Well Restoration\Base\CAD\C0-COVER & DETAILS.dwg

Flange supports are to be factory fabricated units. No contractor fabricated supports are allowed. Material to be A36 steel with a galvanized finish unless indicated otherwise in specifications. Support design shall have been tested to withstand a minimum of 10,000 pounds compressive load. Test certification must be available. Supports shall be STANDON MODEL S89 as manufactured by -MATERIAL RESOURCES INC., FOREST GROVE, OR.503-533-5256 p, 503-533-5501 f

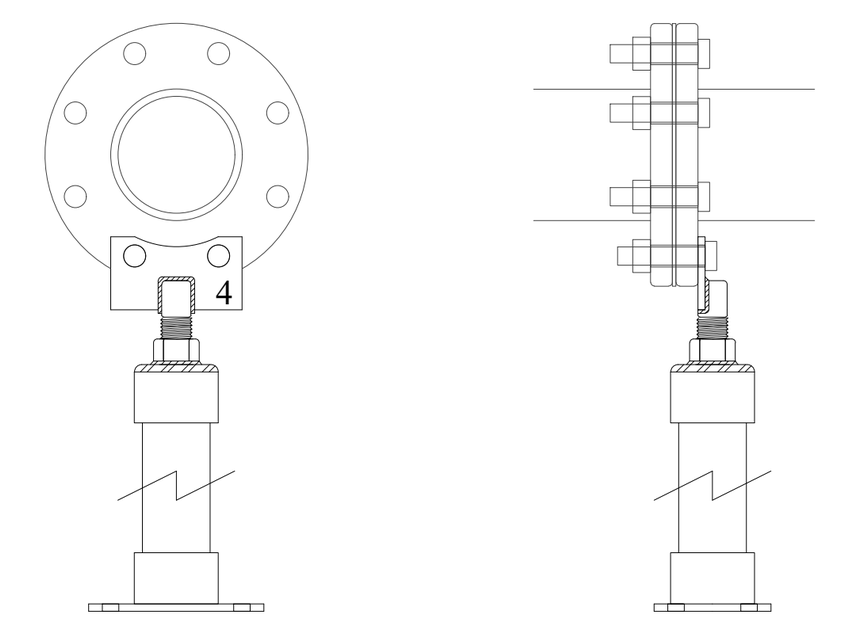

FLANGED PIPE SUPPORT DETAIL
NOT TO SCALE

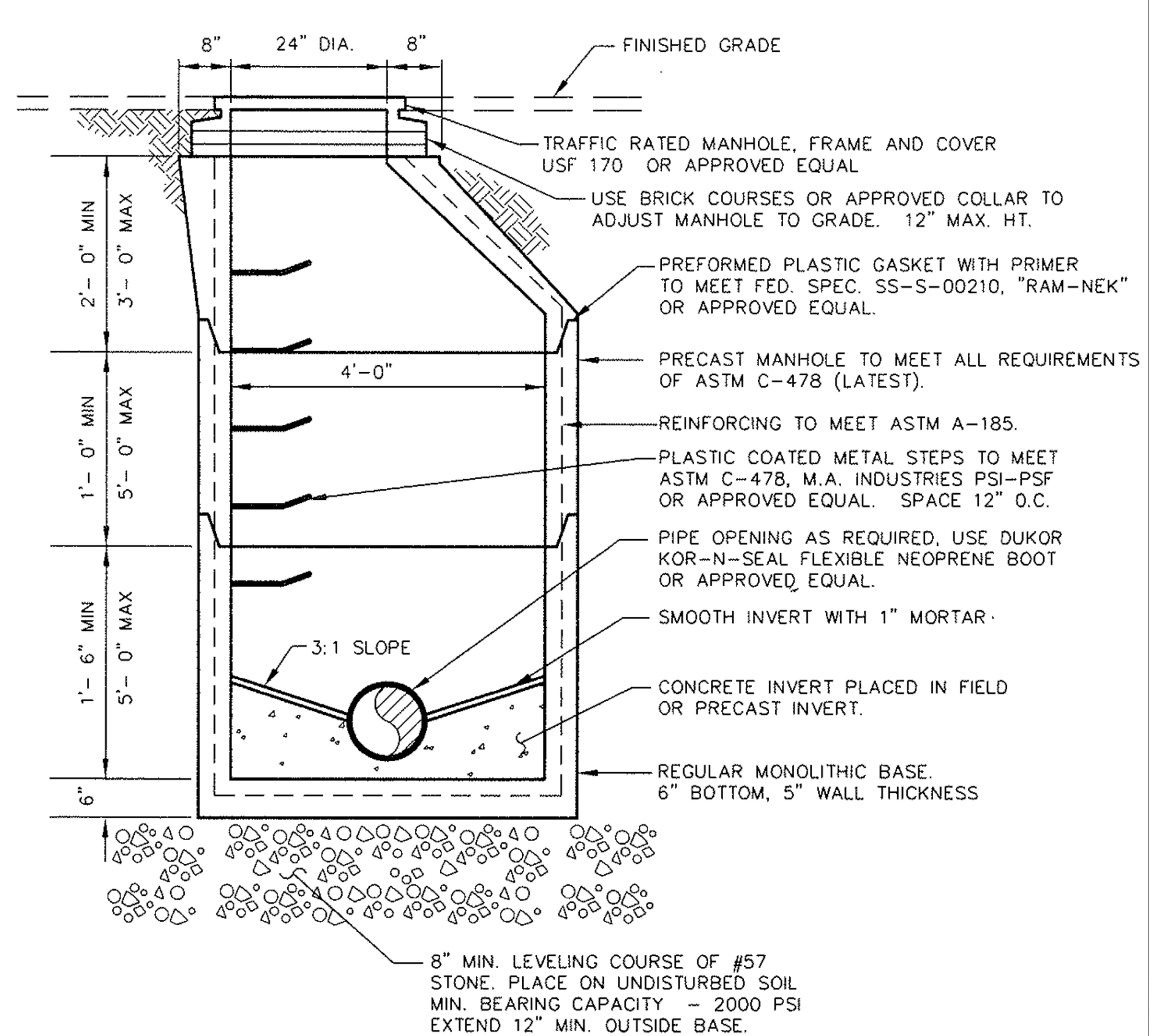

NOTE:
1. ALL MANHOLES SHALL BE ECCENTRIC CONE TYPE WITH VERITICAL SIDE. STEPS SHALL BE POSITIONED OVER INVERT SHELF AND AWAY FROM DROP CONNECTIONS.

STANDARD PRECAST MANHOLE DETAIL
NOT TO SCALE

ES-709DCDA

Engineering Specification

Job Name ________ Contractor ________
Job Location ________ Approval ________
Engineer ________ Contractor's P.O. No. ________
Approval ________ Representative ________

Series 709DCDA
Double Check Detector Assemblies
3" – 10"

Series 709DCDA Double Check Detector Assemblies are designed exclusively for use in accordance with water authority containment requirements. The series is mandatory to prevent the reverse flow of fire protection system substances, such as glycerin wetting agents, stagnant water, and water of non-potable quality from being pumped or siphoned into the potable water line. The valve body is fused with ArmorTek™ coating technology to resist corrosion due to microbial induced corrosion (MIC) or exposed metal substrate. All sizes are standardly equipped with resilient seated OSY shutoff valves, ⅝" x ¾" meter, and ball type test cocks.

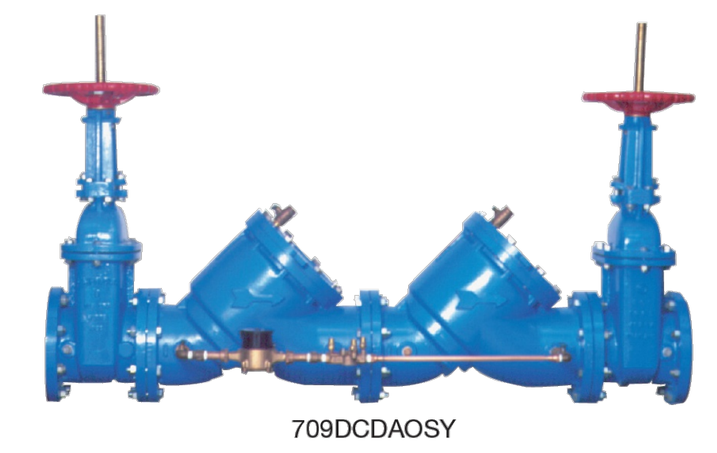

709DCDAOSY

Benefits
- Detects leaks, with emphasis on the cost of unaccountable water
- Incorporates a meter allowing the water utility to (1) detect leaks underground that historically create great annual cost due to waste and (2) provide a detection point for unauthorized use, helping locate illegal taps
- Modular check design concept facilitates maintenance and assembly access.

Features
- Body construction fused epoxy coated cast iron
- Replaceable bronze seats
- Maximum flow at low pressure drop
- Compact for economy combined with performance
- Design simplicity for easy maintenance
- Advanced ArmorTek™ coating technology to resist corrosion of internals
- Furnished with ⅝" x ¾" bronze meter
- No special tools required for servicing

Specification
A Double Check Detector Assembly shall be installed on fire protection systems when connected to a potable water supply. Degree of hazard present is determined by the local authority having jurisdiction. The unit shall be a complete assembly including UL Listed resilient seated OSY shutoff valves and test cocks. The unit shall be UL Classified and FM Approved with UL Classified and FM Approved OSY shutoff valves. The auxiliary line shall consist of an approved backflow preventer and water meter. The assembly shall meet the basic requirements of ASSE 1048; AWWA Std. C510 for Double Check Valves. The valve body shall utilize a coating system with built-in electrochemical corrosion inhibitor and microbial inhibitor. Approved by the Foundation for Cross-Connection Control and Hydraulic Research at the University of Southern California. Assembly shall be a Watts Series 709DCDA.

Check Assembly Module
The check assembly features a modular design concept that facilitates complete maintenance and assembly by retaining the spring load. The first and second check valve spring modules are not interchangeable.

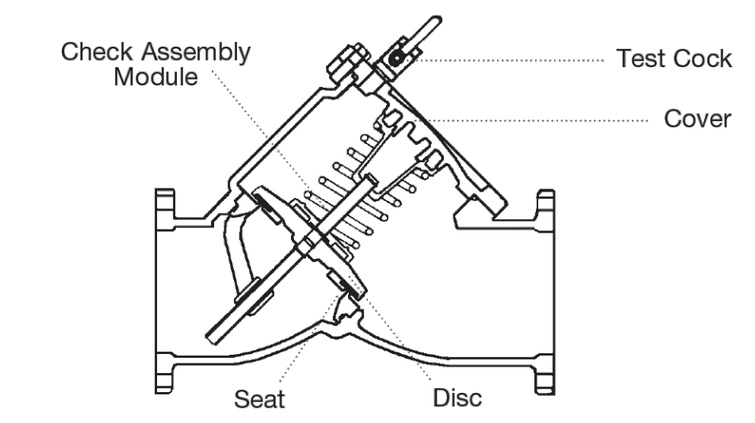

Now Available
WattsBox Insulated Enclosures
For more information, download ES-WB.

NOTICE

The information contained herein is not intended to replace the full product installation and safety information available or the experience of a trained product installer. You are required to thoroughly read all installation instructions and product safety information before beginning the installation of this product.

Inquire with governing authorities for local installation requirements.

Watts product specifications in U.S. customary units and metric are approximate and are provided for reference only. For precise measurements, please contact Watts Technical Service. Watts reserves the right to change or modify product design, construction, specifications, or materials without prior notice and without incurring any obligation to make such changes and modifications on Watts products previously or subsequently sold.

WATTS®

*IDENTICAL OR EQUIVALENT
QUALITY SUBSTITUTION ALLOWED

Materials
Body:	Epoxy coated cast iron
Seat:	Bronze
Disc Holder:	Bronze
Trim:	Stainless steel
Check Valve Discs:	Rubber
Test Cocks:	Bronze
Coating:	ArmorTek™

Models
Suffix:
- **OSY** UL Classified and FM Approved outside stem and yoke resilient seated gate valves
- **CFM** Cubic feet per minute meter
- **GPM** Gallons per minute meter
- **LF** 4" – 10" without shutoff valves

Pressure – Temperature
Temperature Range: 33°F – 110°F (0.5°C – 43°C) continuous, 140°F (60°C) intermittent

Maximum Working Pressure: 175 psi (12.1 bar)

Standards
AWWA Standard C510

Approvals
B.64 1048

Approved by the Foundation for Cross-Connection Control and Hydraulic Research at the University of Southern California. Sizes 4" – 10" approved for horizontal and vertical "flow up." Size 3" approved for horizontal only.

FM Approved 4" – 10" vertical "flow up."

Dimensions – Weights

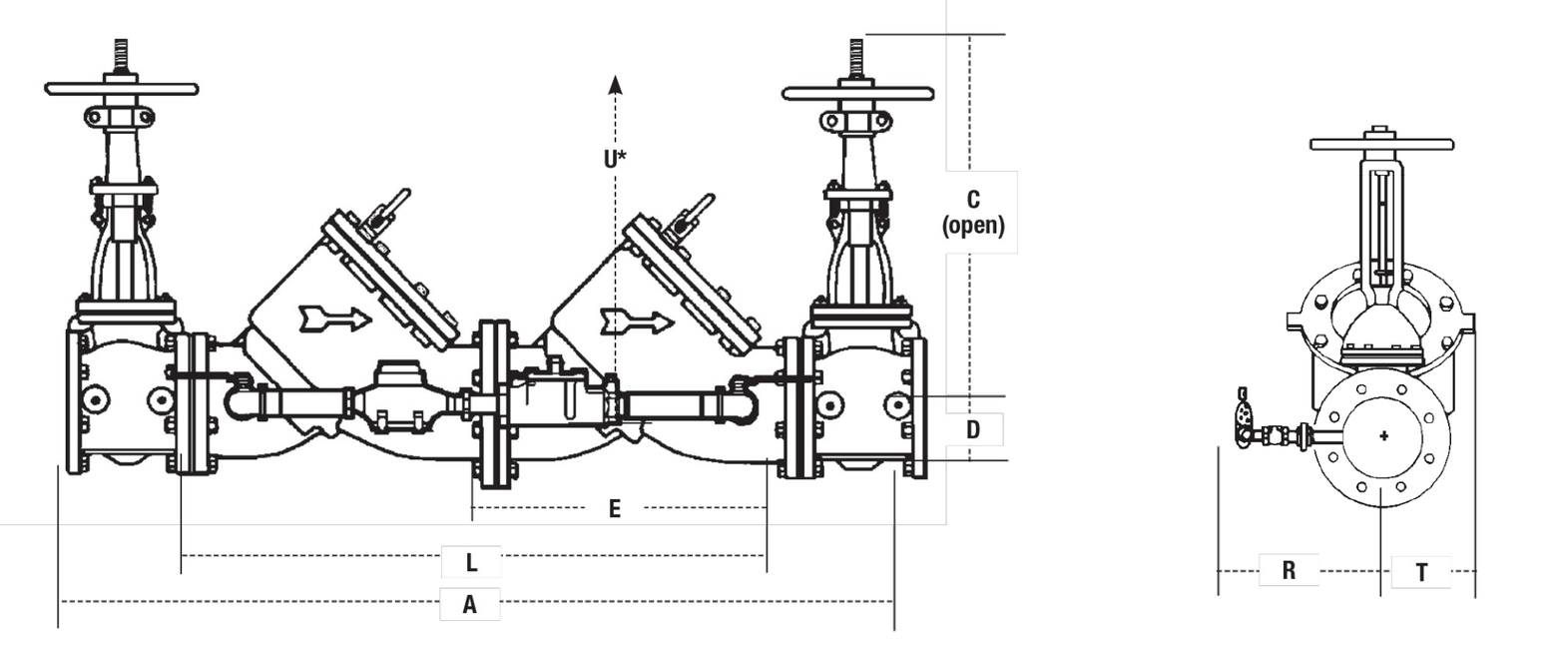

SIZE	DIMENSIONS																WEIGHT	
	A		C		D		E		L		R		T		U*		W/OSY† gates	
in.	in.	mm	in.	mm	in.	mm	in.	mm	in.	mm	in.	mm	in.	mm	in.	mm	lb	kg
3	40	1016	18⅞	479	3½	89	12	305	24	610	14	356	3	76	14	356	190	86
4	52	1321	22¾	578	3¾	95	17	432	34	864	15	381	6	152	14	356	403	183
6	62½	1588	30⅛	765	4½	114	21	533	41½	1054	16	406	7½	191	16	406	727	330
8	75	1905	37¾	959	5½	140	26	660	52	1321	17	432	9	229	21	533	1327	602
10	90	2286	45¾	1162	6½	165	32	813	64	1626	18	457	10¼	260	25	635	2093	949

* Service clearance for check assembly from center.
†UL Classified and FM Approved backflow preventers must include UL Classified and FM Approved OSY.

Capacity
*Rated flow
**UL rated flow

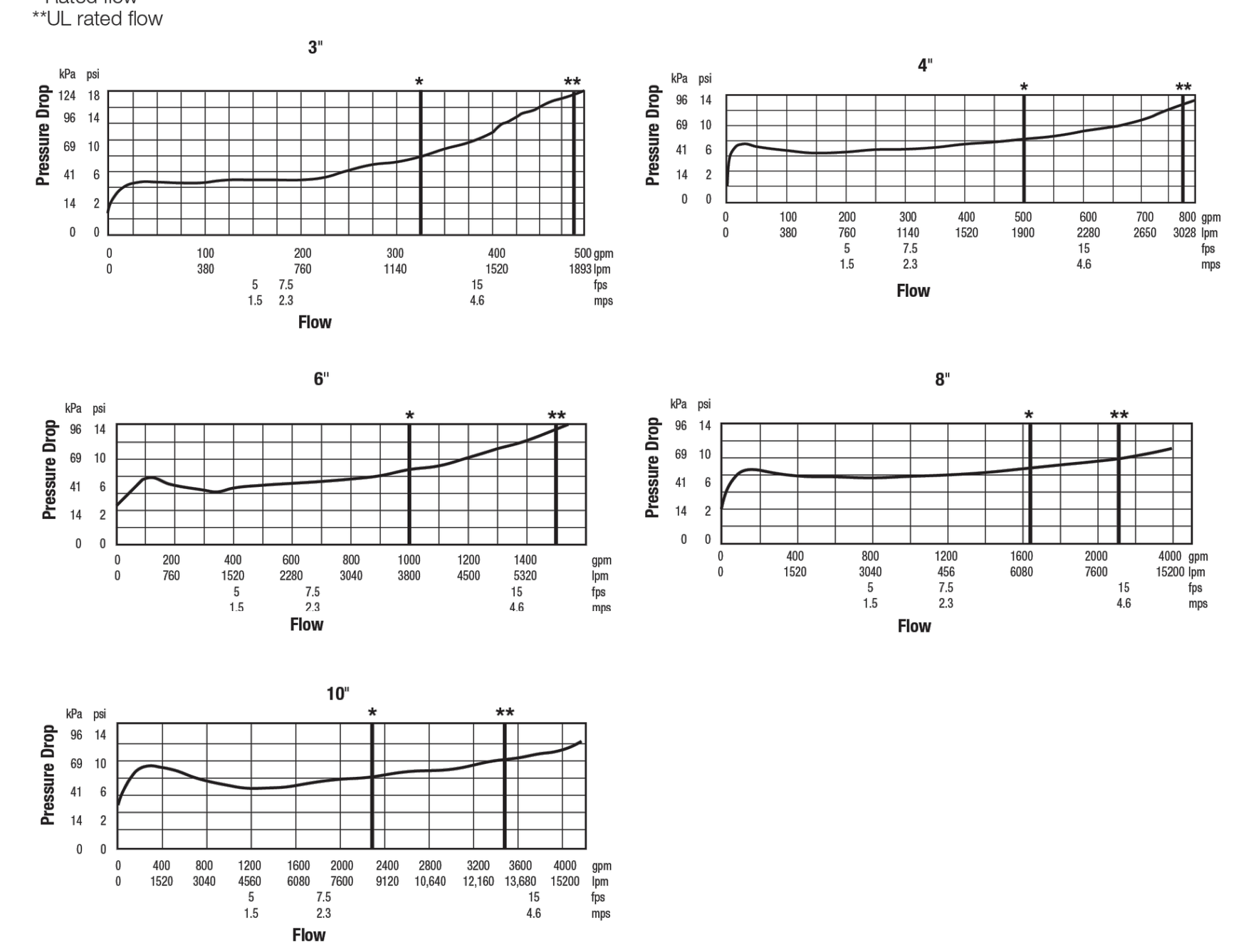

WATTS®

USA: T: (978) 689-6066 • Watts.com
Canada: T: (888) 208-8927 • Watts.ca
Latin America: T: (52) 55-4122-0138 • Watts.com

ES-709DCDA 2240

© 2022 Watts

BACKFLOW DETAIL
NOT TO SCALE

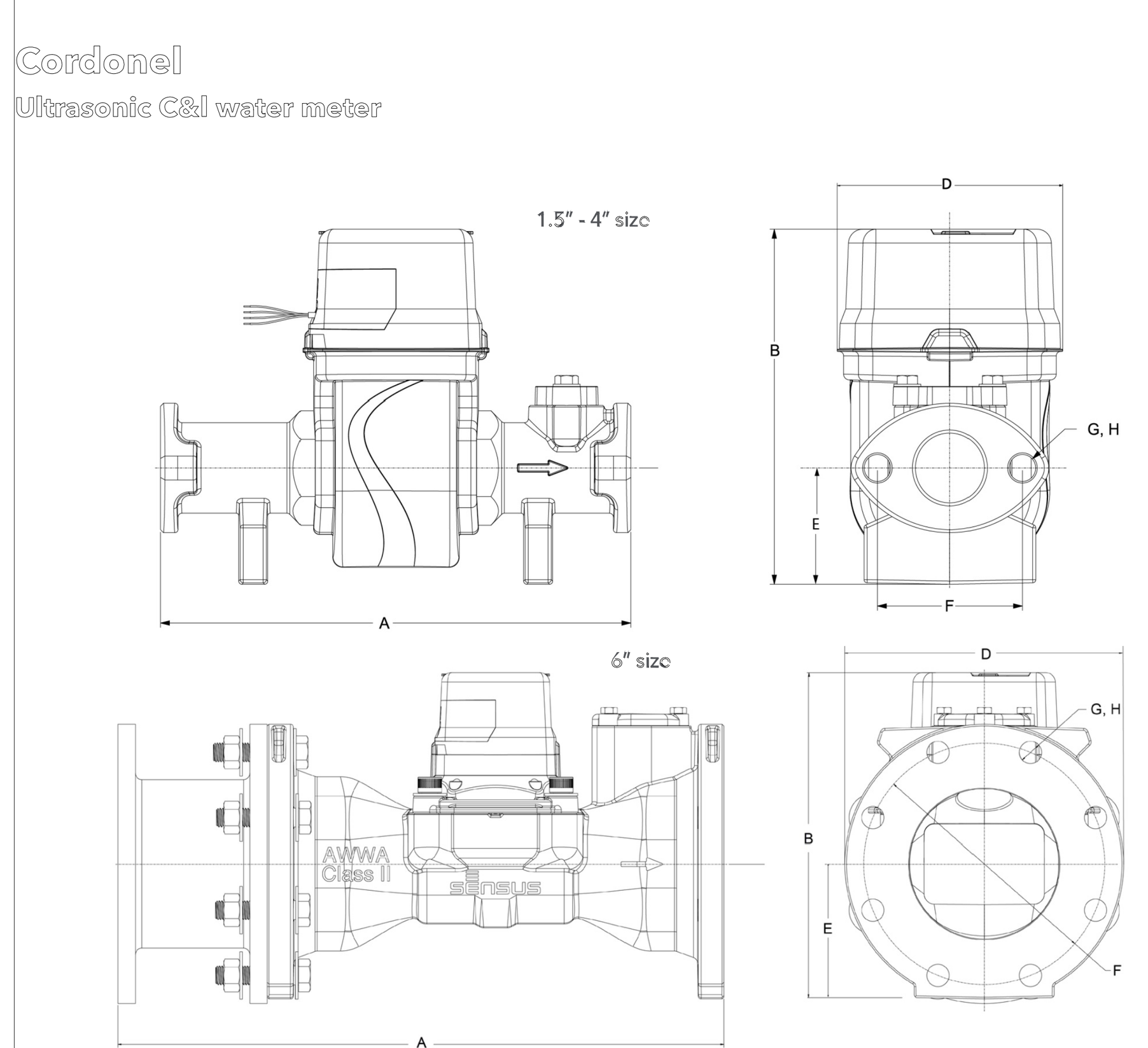

DIMENSIONS AND NET WEIGHTS

Size	A (lay length)	D (width)	B (Height)	E (Height to pipe axis)	F Bolt circle	G No. of bolts	H Bolt size	Net Weight
4" (DN 100 mm)	23" (584mm)	9" (229 mm)	12.2" (310mm)	4.37" (111 mm)	7.5" (191mm)	8	5/8"	79.81 lb (36.2 kg)
6" (150 mm)	27" (685mm)	11" (280 mm)	12.874" (327 mm)	5.31" (135 mm)	9.5" (241 mm)	8	3/4"	96.12 lb (43.6 kg)

FLOW METER DETAIL
NOT TO SCALE

ProSeries XTP™
Thermostatic Water Heater for Commercial and Industrial Applications

Specifications
Tankless Electric Water Heater

Applications
- Booster (up to 180°F)
- Recirculation loop*
- Washdown processes
- Commercial kitchens / utility sinks
- Kitchen, wet bar, utility sinks
- Mop sinks
- Dishwasher

Features
- Adaptive Stability Technology™ assesses the heater condition and shifts unit operation to ensure a consistent and reliable output
- Includes wall mounting bracket allowing for easy, flexible installation, reducing time and labor
- SafeStart™ engages upon start-up to avoid dry-fire occurrence
- 4-line, 20-character LED display delivers an enhanced user experience - display relays system status & operation feedback
- Built to last - constructed of powder-coated galvanized steel, stainless steel heat exchanger and sheathed copper heating elements, protecting the heater and minimizing the occurrence of rust and corrosion
- Self-diagnostics with intelligent controls actively protect heater in installed environment
- Flow activation at 0.5 GPM/ 1.89 LPM across product line
- Max flow of 20 GPM
- Fittings suit common plumbing connections (3/4" NPT)
- Temperature stability at +/- 1°F or +/- 0.6°C output
- High temperature limit switch enables safe operation
- Powered by three phase delta, capable of supporting locations serviced by three phase wye or three phase delta power
- Only one input water line, cold or hot, needed for installation
- Factory set to 120°F
- Compact size for flexible installation
- User adjustable turn on flow
- User adjustable temperature settings 60° - 180°F
- Inlet/outlet thermistors for precise temperature control
- Tamper resistant controls (hardware lockout)
- IP25-rated cover prevents water intrusion within the system (water run-off and minimal corrosion)

Optional Features (NEMA cabinet required)
- N4 (powder coated steel), N4X (304SS) N4X6 (316SS) enclosures
- Free standing legs
- Freeze protection for harsh climate, up to -30°F
- Non-fused or fused electrical disconnect
- GFCI
- Explosion proof – C1D2 Compliant, local certification required. Class Z purge and pressurization system provided with pressure switch for alarm controls. For classification other than C1D2 please contact the factory to discuss options.
- Siren and beacon - audible and visual alarm (C1D2 compliant when paired with explosion proof package)
- Display is visible regardless of NEMA cabinet selection

Product Specifications
Min. Operating Pressure:	35 PSI
Max. Operating Pressure:	150 PSI
Optimum Operating Pressure:	60-90 PSI

*When used in a recirculation application, please consult your Eemax representative for assistance from our Applications Engineering team.



Electrical configuration and requirements
All Eemax three phase units are custom made to order and as such, are non-returnable and non-refundable. Check your electrical supply, making sure all criteria for operating your Eemax water heater are met.

Eemax 480V and 208V Three Phase Units Delta Configuration
Requires: 3 Lives and 1 Ground (earth)

ProSeries XTP is compatible with both Delta and Wye electrical configuration requirements. When installing a ProSeries XTP to a Wye electrical configuration, the neutral leg is not used.

L1 L2 L3 / L1 L2 N L3

Intertek · NO LEAD* *The wetted surface of this product contacted by water contains less than 0.25% lead and meets NSF/ANSI 372 · Assembled In USA

Special Design Service
- Inquiries for units for unique applications are welcome. Call our Technical Service department at **1 800 543 6163.**
- Custom orders non-refundable

Suggested Specification
Tankless water heater shall be an Eemax model number ______________.

Factory installation in a ______(N4/N4X/N4X6) enclosure.

Enclosure to be fitted with the following features:
- ____ **FP** Freeze protection (-30°F)
- ____ **EDS** Non-fused disconnect
- ____ **FDS** Fused disconnect
- ____ **EP** Explosion proof (C1D2 compliant)
- ____ **GFCI** True RMS GFCI with digital display and reset
- ____ **SK** 24" legs for free standing applications
- ____ **SB** Siren and Beacon
- ____ **DC** Dry contact
- ____ **ES** Emergency stop - push button
- **EX68031-16** Disconnect Switch (see page 42-43) Note that this disconnect is applicable to NON-NEMA cabinet installations only

Tankless water heater must be constructed with NSF61 listed materials. Unit to accommodate vertical (upright) or horizontal mounting orientations. Heating element to be sheathed, copper cartridge style, designed for field replacement. Tankless water heater to use 4 line, 20 character LED digital display. Display to include selectable Celsius / Fahrenheit, inlet temperature, outlet temperature, and set point temperature. Display to be capable of relaying flow rate in gallons per minute or liters per minute. Diagnostic features to include error and fault code notifications via digital display. Control board to maintain error/fault history. Water heater must be protected by redundant safeties and to include integrated flow meter that will ensure accurate turn-on /turn-off flow rate. Unit shall have a 0.5 GPM turn on flow. Water heater shall modulate power to the heating elements to maintain a users elected output temperature between 60 - 180°F (subject to incoming water temperature). The unit shall be equipped with both computer controlled and electromechanical thermostat switches for high-limited temperature protection. Maximum operating pressure of 150 PSI. The water heater shall be fitted with 3/4" NPT fittings. Heater shall employ technology that engages upon start-up to avoid dry-fire occurrence. Unit shall be Eemax or approved equal.

Information and product specifications contained in this document are subject to change without notice. REV 2025

ProSeries XTP™
Thermostatic Water Heater for Commercial and Industrial Applications

Specifications
Tankless Electric Water Heater

MODEL NUMBER	kW	AMPS PER PHASE	TURN ON (GPM)	RECOMMENDED WIRE SIZE (90° C/CU)	TEMPERATURE RISE °F 1.0 GPM	2.0 GPM	3.0 GPM	4.0 GPM	5.0 GPM	6.0 GPM	7.0 GPM	8.0 GPM	9.0 GPM	10.0 GPM
VOLTS 208														
XTP018208	18	50	0.5	8 AWG	123°	60°	40°	30°	24°	20°	17°	15°	13°	12°
XTP024208	24	67	0.5	4 AWG	†	82°	55°	41°	33°	27°	23°	20°	18°	16°
XTP032208	31.2	87	0.5	3 AWG	†	107°	71°	53°	43°	36°	30°	27°	24°	21°
VOLTS 480														
XTP016480	16	19	0.5	12 AWG	109°	55°	36°	27°	22°	18°	16°	14°	12°	11°
XTP020480	20	24	0.5	10 AWG	137°	68°	46°	34°	27°	23°	20°	17°	15°	14°
XTP024480	24	29	0.5	10 AWG	†	82°	55°	41°	33°	27°	23°	20°	18°	16°
XTP027480	27	33	0.5	8 AWG	†	92°	61°	46°	37°	31°	26°	23°	20°	18°
XTP036480	36	43	0.5	8 AWG	†	126°	84°	63°	51°	42°	36°	32°	28°	25°
XTP048480	48	58	0.5	8 AWG	†	†	109°	82°	66°	55°	47°	41°	36°	33°
XTP054480	54	65	0.5	6 AWG	†	†	123°	92°	74°	61°	53°	46°	41°	37°

† Temperature electronically limited to factory preset temperature.
"C" indicates evaluation and compliance to either Underwriters Laboratories (UL) or Intertek (ETL) under CAN/CSA-22.2 No. 64/No. 88.

Base Model Dimensions
Est. weight 36 lb. Designed for wall mounted installation.

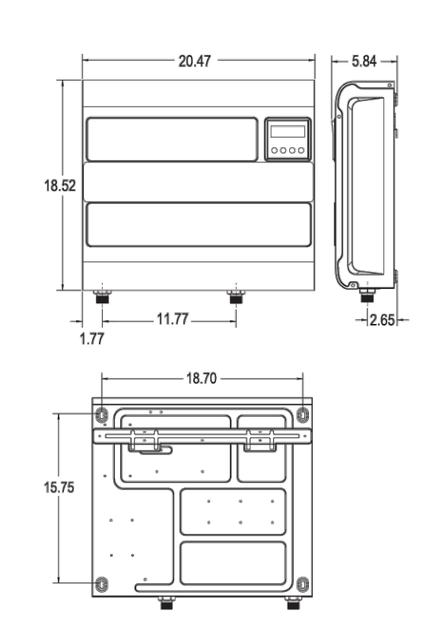

Wall Bracket Dimensions

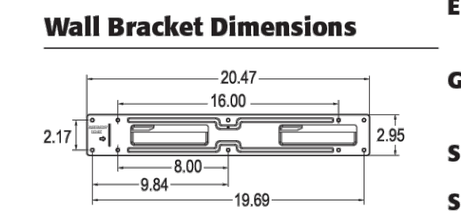

NEMA Cabinet Options*
Dimensions:	24"H x 30"W x 13.5"D
N4	Powder coated steel
N4X	Corrosion-resistant 304 stainless steel
N4X6	Corrosion-resistant 316 stainless steel

Est. total weight 130 lb. Designed for wall mounted installation.

NEMA Cabinet Options and Accessories
Dimensions:	36"H x 30"W x 17.3"D
N4	Powder coated steel
N4X	Corrosion-resistant 304 stainless steel
N4X6	Corrosion-resistant 316 stainless steel

These options require the large cabinet:

FP	Freeze protection (-30°F)
EDS	Non-fused disconnect
FDS	Fused disconnect
EP	Explosion proof purge kit and vent (C1D2 compliant)
GFCI	True RMS GFCI with digital display and reset
SK	24" legs for free standing applications
SB	Siren and Beacon
DC	Dry contact
ES	Emergency stop - push button

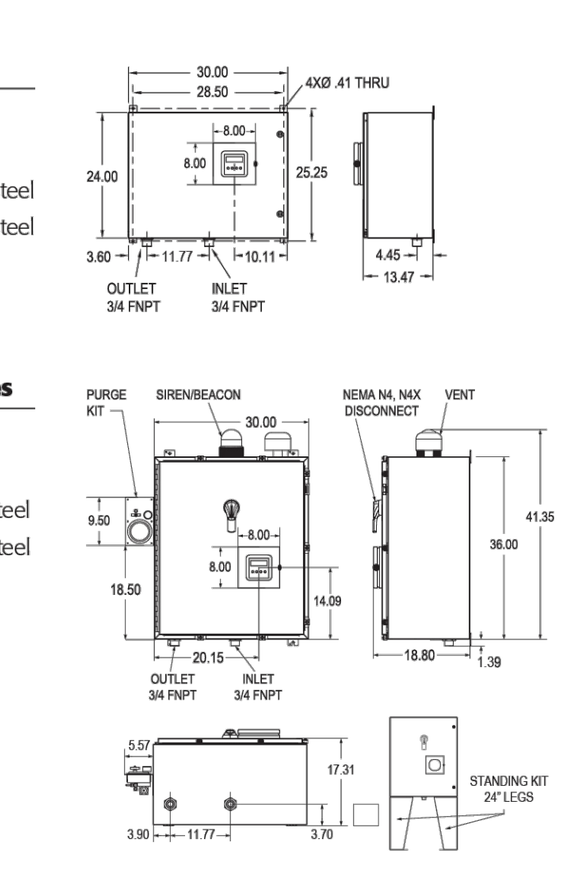

Est. total weight 195 lb, varies based on options. Designed for wall mounted installation. Free standing legs and other options available.

*Refer to page 47 of this specification guide for more details regarding selection.

Disconnect Switch Applications

EX68031-15	EX68031-16
XTP016480, XTP020480, XTP024480	XTP018208, XTP027480, XTP036480, XTP048480

Information and product specifications contained in this document are subject to change without notice. REV 2025

*IDENTICAL OR EQUIVALENT
QUALITY SUBSTITUTION ALLOWED

TANKLESS WATER HEATER DETAIL
NOT TO SCALE

ESG ENGINEERING
6400 Peake Rd
Macon, GA 31210
Ph: (478) 474-4996
Fax: (478) 474-5045

GROUNDWATER WELLS #4 & #5
FOR THE
CITY OF FLOWERY BRANCH

REVISIONS

NO.	DESCRIPTION	DATE
1	ESPC SHEETS	11-7-25
2	REVISED WITH CITY COMMENTS	12-1-25

CONFORMED SET

GEORGIA REGISTERED No. PE046341 PROFESSIONAL ENGINEER ANDREW D SWICEGOOD

DRAWN BY: DSC
CHECKED BY: ADS
DATE: OCT 2025
SCALE: N.T.S.

CONTENT:
CONSTRUCTION DETAILS

SHEET NO:
C9.1

Last Saved By: Eleonard Plotted: 12/2/2025 9:20 AM
Drawing Path: Z:\Engineer Projects\F0002 - FLOWERY BRANCH, CITY OF\Fxxxx.xxx Groundwater Well Restoration\Base\CAD\C0-COVER & DETAILS.dwg

Specifications
PFMB2424
Mop Basin

PROFLO

Product Features
· Molded, high-density composite basin
· Integral drain is molded into basin
· Gasket and stainless steel strainer included with the basin
· Designed to connect to 3" PVC drain pipe
· 10" Deep

Model Numbers

PFMB2424	24" x 24" Mop service basin with integral molded drain

Available Parts

PFMBSSDRN	3" Strainer and gasket for PFMB2424
PFBG24S	24" Stainless steel bumper guard
PFBG24V	24" Vinyl bumper guard
PFWG24S	24" Stainless steel wall guard set (Wall guard height: 12")
PF245	Mop hanger
PFSSHE	Service hose
PF296	Service hose bracket
PFMB32	QIC32. 3" x 2" pipe reducer gasket – for use with PFMB2424
PFMB3SN	QIC3SN. Gasket for 3" soil pipe – for use with PFMB2424


PFMB2424

Warranty and Codes
These products come complete with installation, operating, care and maintenance instructions. All PROFLO basins carry a 1-year limited warranty. These products meet or exceed ANSI Z124.2. In an effort to continually improve our products, we will make design changes from time to time. We reserve the right to ship newly designed product to fill any order unless we agree in writing to do otherwise.

FERGUSON.COM/PROFLO

*IDENTICAL OR EQUIVALENT QUALITY SUBSTITUTION ALLOWED

Specifications
PFMB2424
Mop Basin

PROFLO

Suggested Installation

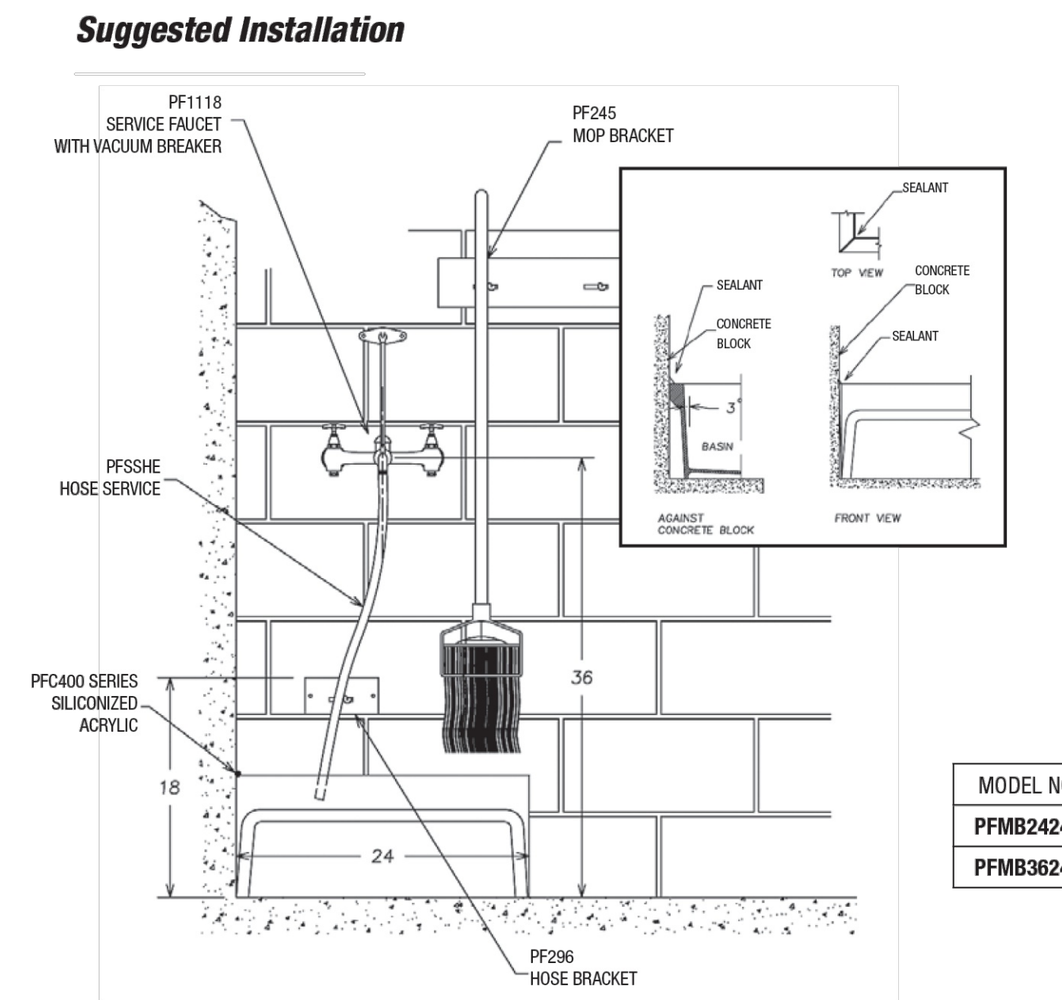

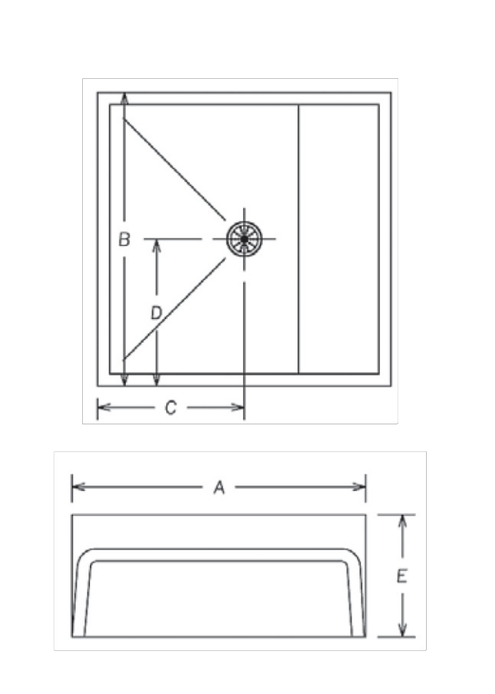

MODEL NO.	A	B	C	D	E
PFMB2424S	24-3/16"	24-3/16"	12"	12"	10"
PFMB3624S	36-3/16"	24-3/16"	18"	12"	10"

Rough-In Details Front View

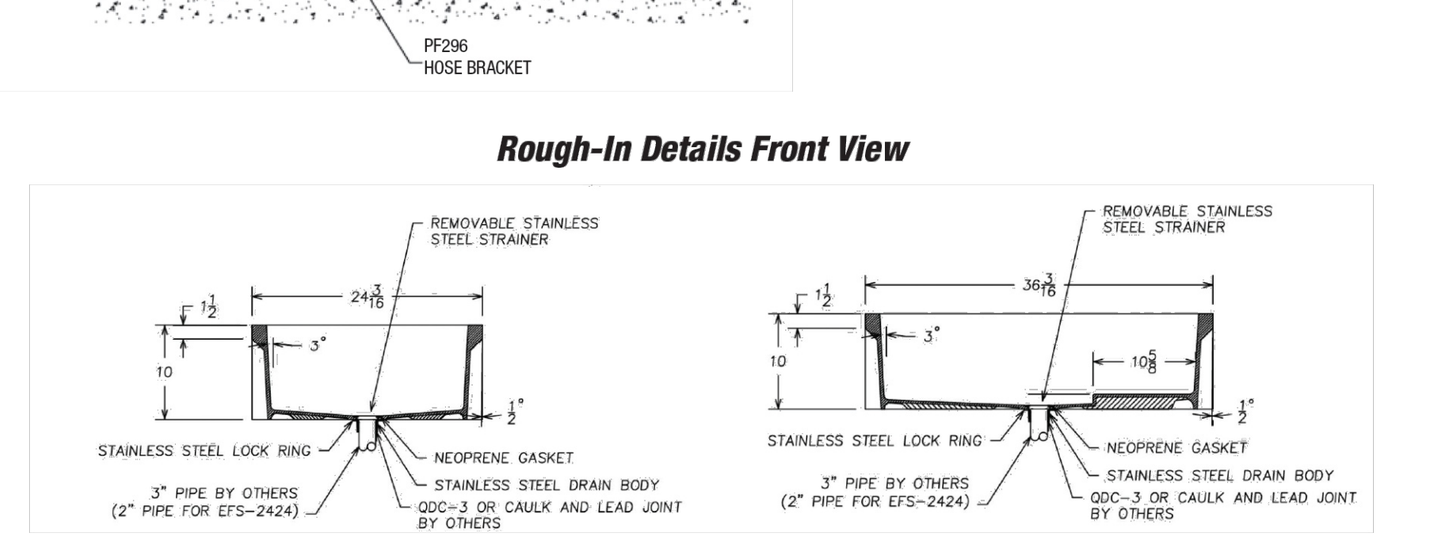

PFMB2424S PFMB3624S

©2024 Ferguson Enterprises, LLC 0124 6092747

FERGUSON.COM/PROFLO

MOP BASIN - SINK DETAIL
NOT TO SCALE

PRIER

C-634 Heavy Commercial Wall Hydrant

MasterSpec

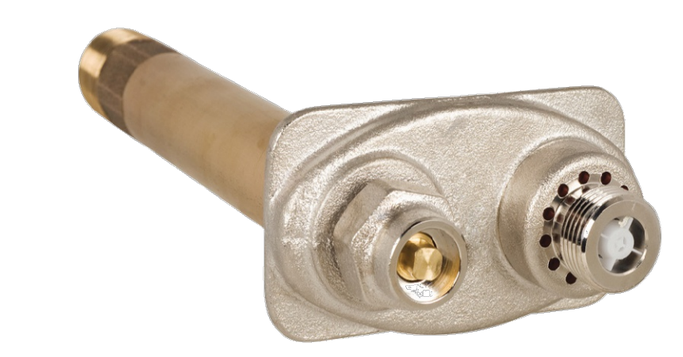

- Anti-Siphon
- Freezeless
- Commercial / Industrial
- Double Backflow Check Valve

With Integral P-004 Vacuum Breaker
PRIER C-634 provides a year round source of water to areas that are subject to freezing temperatures. The hydrant valve is connected to the supply piping in the heated portion of the structure, eliminating the possibility of freezing. To assure freeze protection, the hydrant will drain even with the hose attached and under pressure.

The integral vacuum breaker/backflow preventer provides protection against cross-connection with the potable water system, utilizing 2 check valves to prevent back pressure and a vacuum breaker to vent in the case of siphonage. This commercial wall hydrant is key operated, code approved, and flows up to 16 GPM. A removable operating key is provided to prevent unauthorized usage of the hydrant. No special installation tools are required.

FEATURES

- Field testable as required by ASSE 1052, pressure rated to 125 PSI, temperature to 140°
- Satin nickel plated body maintains an attractive finish
- Multiple vent holes ensure proper draining and reduce problems associated with insect nesting
- Patented PRIER "triple seal" positive shutoff system offers triple redundancy to assure shutoff
- High flow rate, 16 gallons per minute at 25 PSI differential
- Same key operates box lock and hydrant
- Tested to 250,000 cycles; designed to last the life of the plumbing system
- Heavy pattern cast brass hydrant for use with or without brass box or aluminum box
- Heavy duty brass piping, significantly stronger than copper, with threaded and sealed joints
- Simple, solderless design and solid non-ferrous operating rod for long wear life
- Design enables valve to be easily secured to any type of inner wall, utilizing the provided clamping ring
- Integral 3/8"-16 mounting lugs on box provide easy and secure installation.
- Round Box (RB1) installs through 6" hole or 6" Schedule 40 PVC sleeve
- Patented PRIER quick opening and modulating design requires less force and fewer turns to operate
- Gasket prevents water and air intrusion into the building

ORDERING

Wall Hydrant Only
C-634N10

Hose Thread Outlet: 4- ¾" Garden Hose; 6- 1" Hose
Inlet: N- 1" MPT x ¾" FPT; P- 1" Male SWT x ¾" Female SWT; V- ¾" Copper-Press Fitting Ready
Length: 04- 4" Insertion; 06- 6" Insertion; 08- 8" Insertion; 10- 10" Insertion; 12- 12" Insertion; 14- 14" Insertion; 16- 16" Insertion; 18- 18" Insertion; 20- 20" Insertion; 22- 22" Insertion; 24- 24" Insertion; XX- Special Size
Handle: Add -HDL to end of part number to order handle

Optional Hydrant Box
C-634BX1

Box Finish: BX1- Satin Nickel Plated; BX2- Rough Brass; BX3- Aluminum; RB1- Round Box (Satin Nickel Plated)
C-634 Gasket: Included with C-634 hydrant boxes
Cylinder Lock: Add -CL to end of part number to order cylinder lock

BX1 BX2 BX3 RB1

4515 E. 139th Street Grandview, MO 64030 | (800) 362-9055 | PRIER.com

C-634-V

*IDENTICAL OR EQUIVALENT QUALITY SUBSTITUTION ALLOWED

C-634 REPLACEMENT PARTS AND STEMS

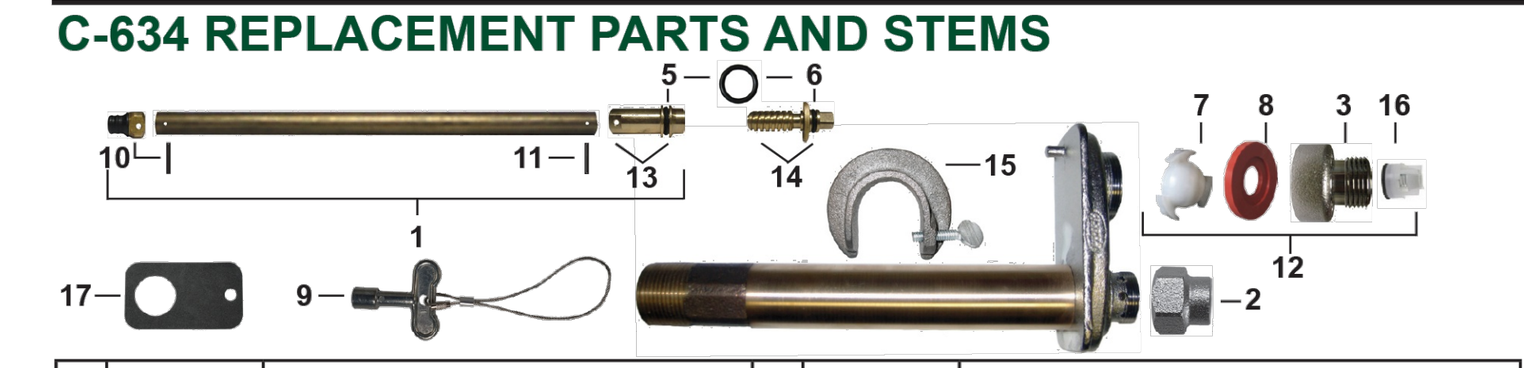

ID	Part No.	Description	ID	Part No.	Description
1	See Below	Stem Assembly, Contains: 5, 6, 10, 11, 13	5	336-0001	O-Ring Worm Sleeve
	P-231-0604	Stem for 4" C-634 Hydrant, 4 11/16" OAL	6	336-6001	O-Ring Worm Drive
	P-231-0606	Stem for 6" C-634 Hydrant, 6 11/16" OAL	7	337-6001	Check Spider-Vacuum Breaker
	P-231-0608	Stem for 8" C-634 Hydrant, 8 11/16" OAL	8	346-6001	Diaphragm-Vacuum Breaker
	P-231-0610	Stem for 10" C-634 Hydrant, 10 11/16" OAL	9	C-108KT-808	Loose Key on Lanyard
	P-231-0612	Stem for 12" C-634 Hydrant, 12 11/16" OAL	10	C-634KT-802	Stopper Kit, Includes Stopper and Pin, Contains: 5, 10
	P-231-0614	Stem for 14" C-634 Hydrant, 14 11/16" OAL	11	324-0004	Pin Only
	P-231-0616	Stem for 16" C-634 Hydrant, 16 11/16" OAL	12	C-634KT-806	Vacuum Breaker Assembly
	P-231-0618	Stem for 18" C-634 Hydrant, 18 11/16" OAL	13	C-634KT-808	Worm Sleeve with O-Ring, Pin and Tool
	P-231-0620	Stem for 20" C-634 Hydrant, 20 11/16" OAL	14	C-634KT-809	Worm Drive Assembly with O-Ring
	P-231-0622	Stem for 22" C-634 Hydrant, 22 11/16" OAL	15	C-634WCR	Wall Clamping Ring
	P-231-0624	Stem for 24" C-634 Hydrant, 24 11/16" OAL	16	399-0001	Secondary Check for ASSE 1052
2	300-6003	Valve Stem Cap (NP Brass)	17	346-0004	C-634 Gasket
3	300-6004	3/4" Hose Piece (NP Brass)		C-634KT-807	C-634 Overhaul Kit, Contains: 9, 10, 11, 12, 13, 14
	310-6009	1" Hose Piece for C-636 (NP Brass)			

**For the old style C-634 Series wall hydrant stems, see C-634 Series retired style spec sheet at PRIER.com.

ROUGH-IN DIMENSIONS

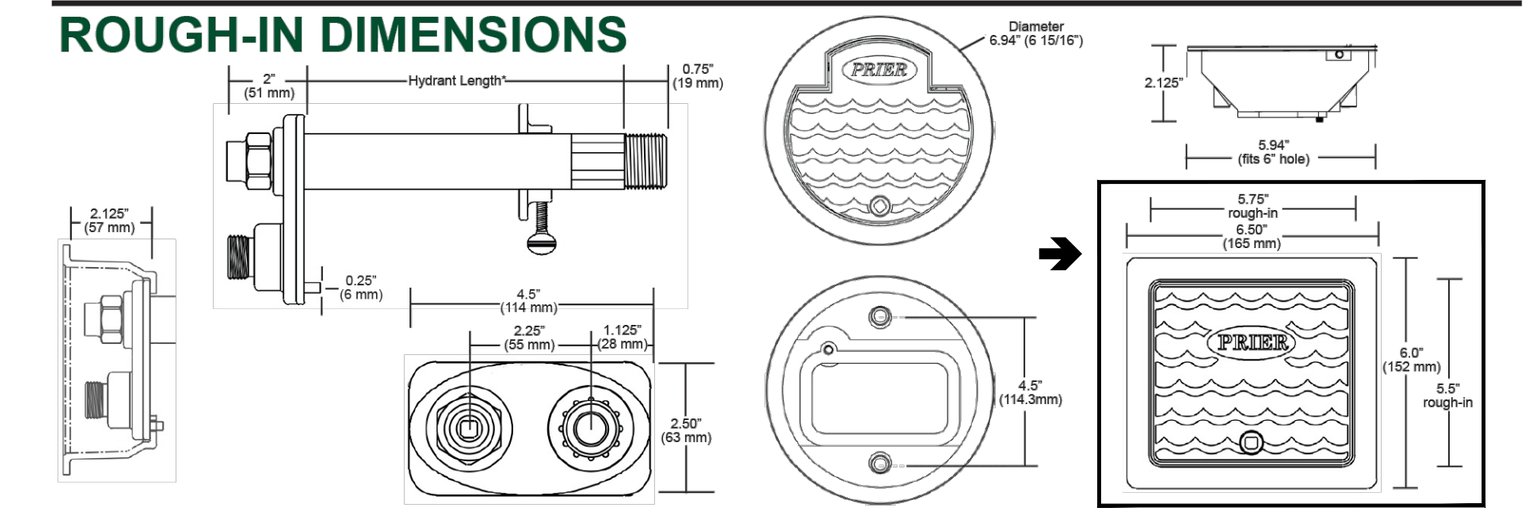

SPECS

Furnish and install Model C-634 Heavy Commercial Wall Hydrant manufactured by PRIER Products, Inc. Hydrant shall be surface mount and installed through 1 3/8" round opening. Hydrant shall have automatic draining capabilities with integral vacuum breaker/double backflow preventor. Hydrant shall flow 16 gallons per minute minimum at 25 PSI Differential and be at full flow in 2 handle rotations. Hydrant shaft shall be brass with connections. Hydrant shall have 3/4" or 1" (choose one) hose connection with freezeless water flow and self-draining functions, one piece valve plunger, satin nickel finish, brass operating rod with positive triple seal shutoff mechanism. Hydrant shall be approved under ASSE 1052 standard. Operating key & wall clamping ring to be furnished with each hydrant. Hydrant insertion length to be x inches. (Length minimum of 4" to choice length in 2" increments.)

Optional: Furnish and install flush-mount hydrant box for each valve. Hydrant box shall be manufactured of solid cast brass or aluminum with a rough brass, satin nickel plated brass or aluminum (choose one) finish. Box shape may be round or square and round box only comes with satin nickel finish. Box may be installed separately and hydrant be insertable and removable from front of the box. Access to the hydrant box shall be provided by the same operating key as the valve. A gasket shall be installed between the box and hydrant to prevent water intrusion into the structure.

4515 E. 139th Street Grandview, MO 64030 | (800) 362-9055 | PRIER.com

C-634-V

SINK HOSE BIBB AND BOX DETAIL
NOT TO SCALE

ZURN Z730
9 [229] TOP MEDIUM-DUTY DRAIN

SPECIFICATION SHEET
TAG ________

Dimensional Data (inches and [mm]) are Subject to Manufacturing Tolerances and Change Without Notice

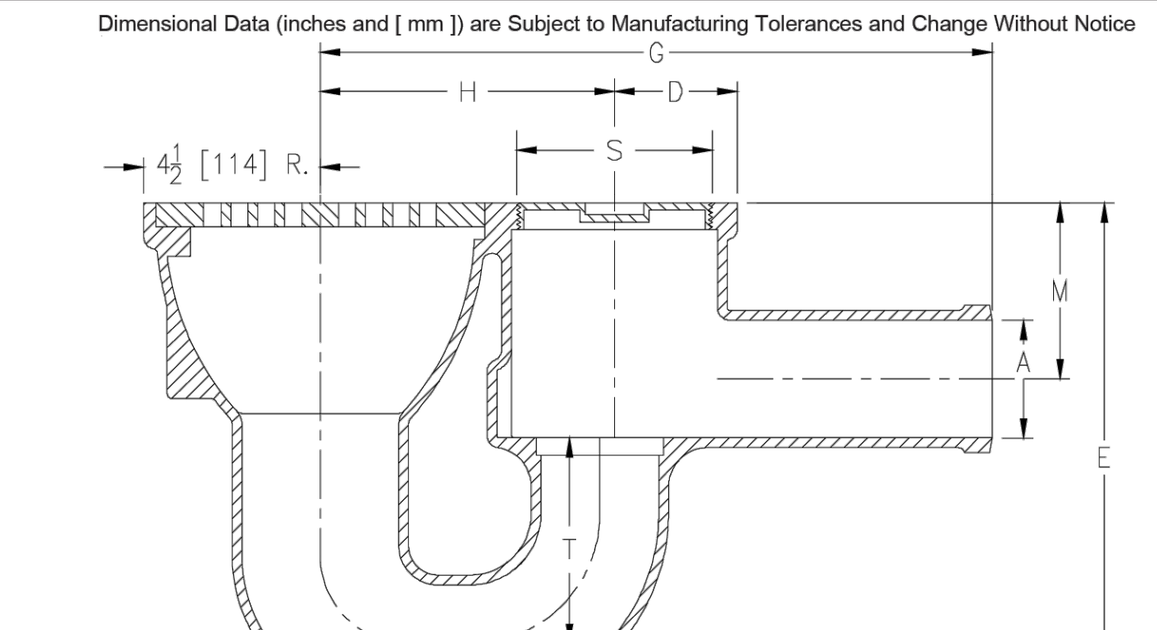

A Pipe Size	S Cleanout Plug Size	Rad D.	G	H	M	T	Approx. Wt. Lbs. [kg]	Grate Open Area Sq. In. [cm²]
3 [76]	4-1/2 NPT	3-1/8 [79]	17-1/8 [435]	7-1/2 [191]	4-1/4 [108]	4 [102]	54 [24]	23 [148]
4 [102]	5-1/2 NPT	3-5/8 [92]	19-3/8 [492]	7-1/2 [191]	4-3/4 [121]	5 [127]	79 [36]	

ENGINEERING SPECIFIC ATION ZURN Z730
9" [229mm] Diameter top drain, Dura-Coated cast iron body with integral double wall trap and side outlet, with bronze floor level cleanout plug and medium-duty loose slotted grate.

OPTIONS (Check/specify appropriate options)

PIPE SIZE: 3 [76]; 4 [102]
(Specify size/type) **OUTLET**: ____ SP Spigot; 4" SP Spigot
'E' BODY HT. DIM.: 13 [330]; 16 [406]

PREFIXES
✓ Z D.C.C.I. Body and Top*
____ ZN D.C.C.I. Body with Polished Nickel Bronze Top (Add 3/16 [5] to 'M' and 'E' Dim.)

SUFFIXES
____ -DG Duresist Grate
✓ -G Galvanized Cast Iron
____ -J Auxiliary Inlet Connection
____ -K Anchor Flange
____ -P Trap Primer Connection
____ -V Backwater Valve
____ -VP Vandal-Proof Secured Top
____ -Y Sediment Bucket
* Regularly furnished unless otherwise specified.

*IDENTICAL OR EQUIVALENT QUALITY SUBSTITUTION ALLOWED

Zurn Industries, LLC | Specification Drainage Operation
1801 Pittsburgh Avenue, Erie, PA U.S.A. 16502 · Ph. 855-663-9876, Fax 814-454-7929
In Canada | Zurn Industries Limited
3544 Nashua Drive, Mississauga, Ontario L4V 1L2 · Ph. 905-405-8272, Fax 905-405-1292
www.zurn.com

Rev. F
Date: 09/27/2017
C.N. No. 137944
Prod. | Dwg. No. Z730

FLOOR DRAIN DETAIL
NOT TO SCALE

ULINE H-10735
STAINLESS STEEL EYEWASH STATION
1-800-295-5510
uline.com

Para Español, vea páginas 5-9.
Pour le français, consulter les pages 10-14.

TOOLS NEEDED

Pipe Wrench, Needle Nose Pliers, Plumber's Tape, Pipe Joint Compound

PARTS

A	Base Plate
B	Bottom Drain Pipe
C	Basin Drain Set
D	Middle Pipe Section
E	Top Pipe Section
F	Square Head Plug
G	Long Shower Connection Pipe
H	Shower Head Elbow
I	Short Shower Connection Pipe
J	Shower Ball Valve
K	Shower Head
L	Pull Rod
M	Inner Basin Drain Screw
N	Eyewash Basin
O	Eyewash Bowl Arms
P	Twin Spray Heads
Q	Push Handle
R	Eyewash Dust Covers
S	Middle Horizontal Inlet
T	Top Vertical Inlet
U	Shower Ball Valve Lever

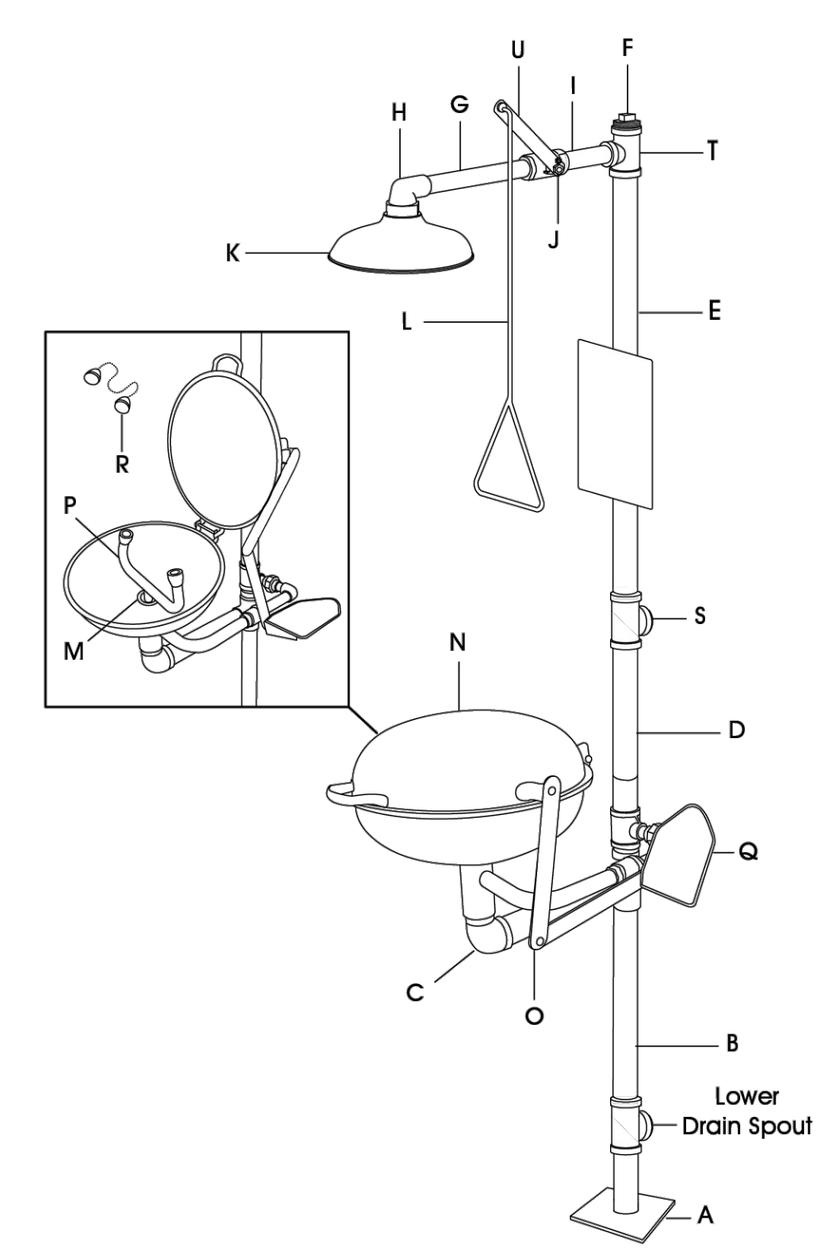

PAGE 1 OF 14 0624 IH-10735

ASSEMBLY

IMPORTANT! All pipes have tapered threads and require plumber's tape and/or joint compound to ensure watertight connection. When securing with plumber's tape, wrap tape 2-4 times around each thread for optimal seal. For best results, Uline recommends the use of plumber's tape followed by joint compound.

1. Secure base plate (A) to floor in desired location. Attach bottom drain pipe (B) to base plate (A) while ensuring lower drain spout is square with base plate. (See Figure 1)

NOTE: The tee-joint on bottom drain pipe (B) is pre-attached. It must be removed to add 2-4 layers of plumber's tape and/or joint compound in order to create a tight seal.

Figure 1
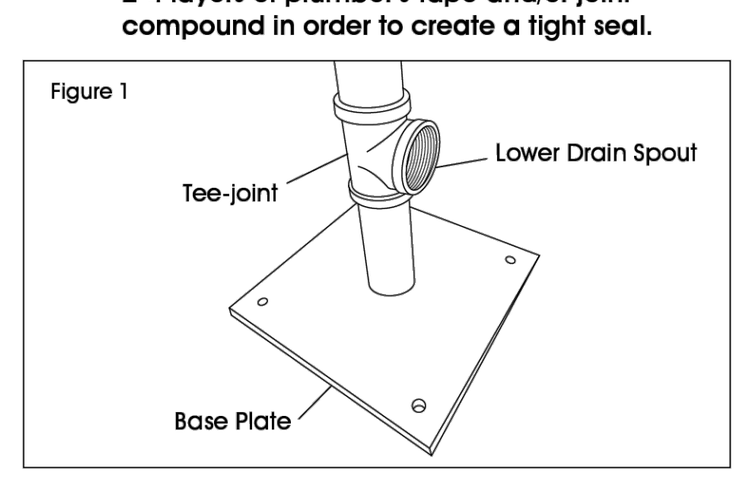

2. Reattach bottom drain pipe (B) to the tee-joint.
3. Attach basin drain set (C) to bottom drain pipe (B), ensuring that the basin drain set is protruding the opposite direction of the lower drain spout.
4. Connect middle pipe section (D) to basin drain set (C).
5. Unscrew top pipe section (E) from pre-attached top vertical (T) and middle horizontal (S) inlets. Wrap 2-4 layers of plumber's tape and/or joint compound, then reassemble with two tee-joints oriented in the opposite direction of each other.
6. Connect reassembled top pipe section (E) to middle pipe section (D), ensuring that the tee-joint with the larger female inlet makes the connection with the middle pipe section (D).

NOTE: Ensure middle horizontal inlet (S) is oriented in the same direction as the lower drain spout from step 1. Ensure top vertical inlet (T) is oriented towards the basin drain set (C).

7. Install the square head plug (F) at desired position on reassembled top pipe section (E).

NOTE: Water supply can be connected to top vertical inlet (T) or middle horizontal inlet (S). Install square head plug (F) into unused inlet.

8. Unscrew long shower connection pipe (G) from shower head elbow (H). Set shower head elbow (H) aside for step 11.
9. Unscrew short (I) and long (G) shower connection pipes from shower ball valve (J). Wrap threads with 2-4 layers of plumber's tape and/or joint compound, then reassemble.

NOTE: While disassembled, ensure shower ball valve (J) is in closed position.

10. Reassemble pipes from step 9. Connect short shower connection pipe (I) to tee-joint on top vertical inlet (T).

NOTE: The shower ball valve lever (U) must be pointing upward when in the closed position.

11. Connect shower head elbow (H) set aside in step 8 to long shower connection pipe (G), ensuring shower head elbow is pointing down.
12. Attach shower head (K) to shower head elbow (H).
13. Using pre-attached bolt and locknut, attach pull rod (L) to shower ball valve lever (U).
14. Unscrew inner basin drain screw (M) on basin drain set (C). (See Figure 2)

Figure 2
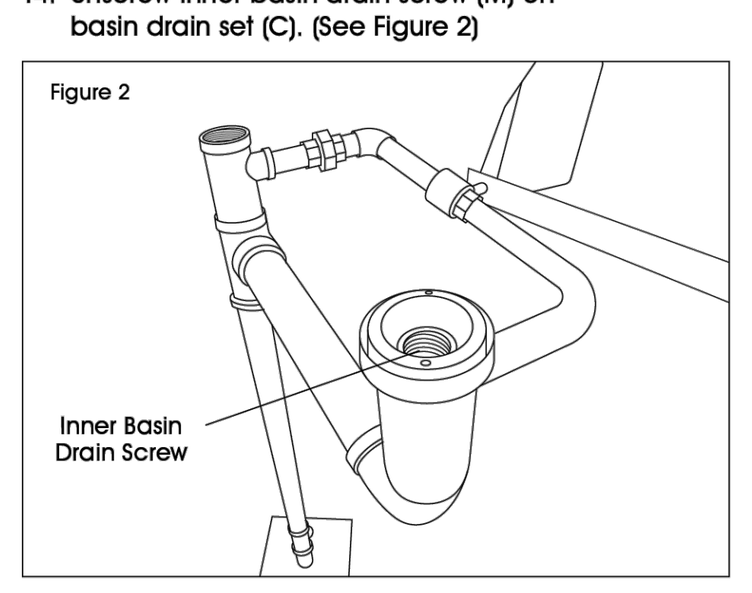

PAGE 2 OF 14 0624 IH-10735

*IDENTICAL OR EQUIVALENT QUALITY SUBSTITUTION ALLOWED

ASSEMBLY CONTINUED

15. Set eyewash basin (N) over the basin drain set (C). Use previously removed inner basin drain screw (M) to secure eyewash basin to basin drain set. Ensure basin handle points forward for final use.

NOTE: It is recommended to tighten inner basin drain screw with needle nose pliers. (See Figure 3)

Figure 3
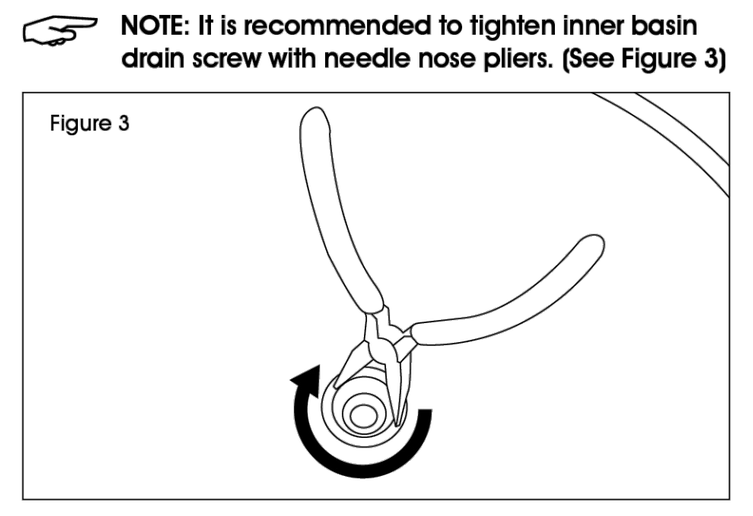

16. Assemble eyewash bowl arms (O). Loosen acorn nut, insert spacer between arms and replace acorn nut. (See Figure 4)

Figure 4
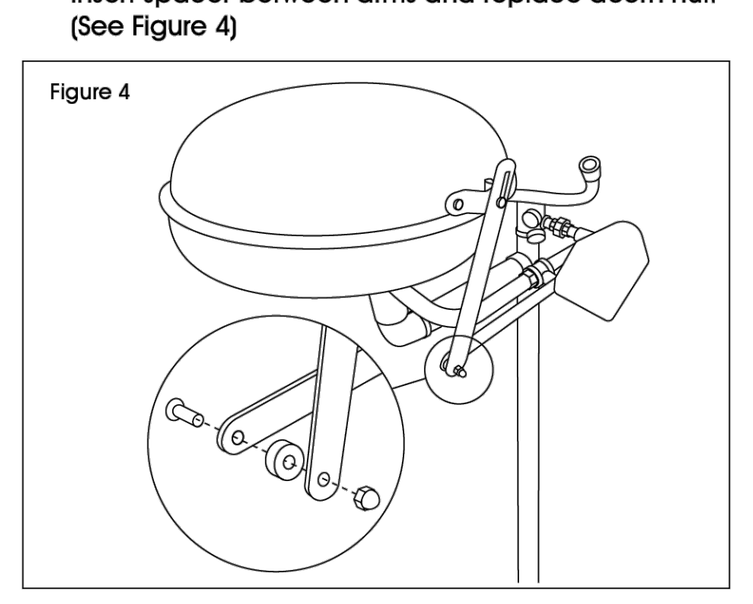

17. Thread twin spray heads (P) into eyewash basin (N) so that the twin spray heads are perpendicular to the basin drain set.

NOTE: Removing yellow eyewash dust covers (R) prior to installation may make this easier.

STOP! Performance should be verified after installation. Check for any leaks while all valves are in the closed position.

IMPORTANT! If leaking after assembly, tighten threaded connections. If leaking persists, disconnect affected connection point and add additional plumber's tape and/or joint compound.

18. Activate water by pulling down on pull rod (L). Run water through shower head to flush out any impurities.

NOTE: Water flow from the shower head should be a minimum of 20 gallons/min, as per ANSI Z358.1 standards.

19. Once flush is complete, push upward on pull rod (L) to close shower ball valve (J). Activate twin spray heads (P) by pressing push handle (Q) to test for proper connections.

NOTE: Water flow from the twin spray heads should be a minimum of 0.4 gallons/min, as per ANSI Z358.1 standards.

20. Mount eyewash sign in desired location using pre-attached bracket.
21. Locate inspection card in desired location using included cable tie.

MAINTENANCE

- All units should be tested on a weekly basis to clear supply lines and verify proper activation. Units must also be inspected annually to verify that they continue to meet conformance of required performance standards.
- Where freezing conditions exist, unit must be protected from freezing.

PAGE 3 OF 14 0624 IH-10735

ASSEMBLY CONTINUED

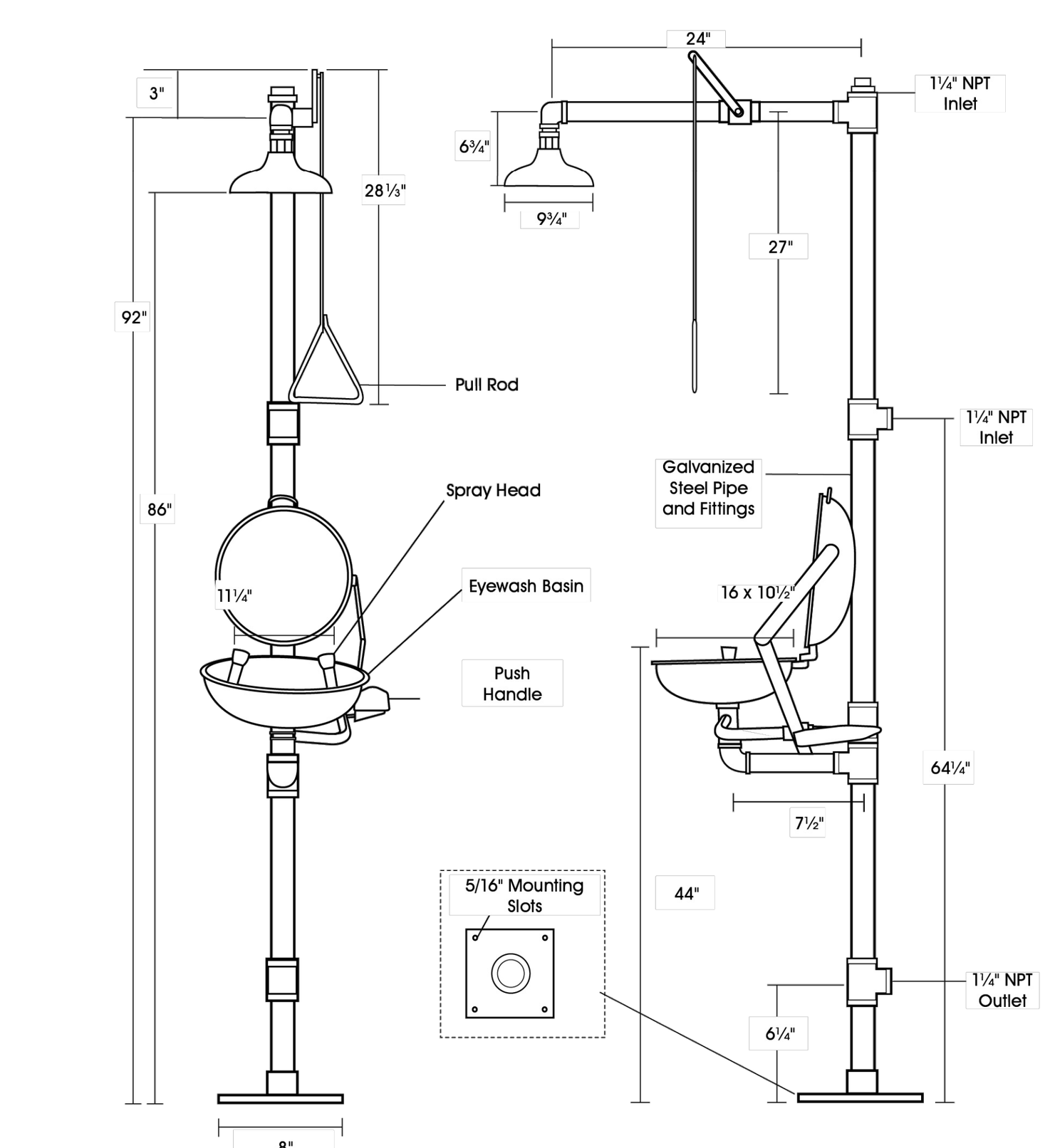

This unit complies with the requirements of ANSI Z358.1.

ULINE
1-800-295-5510
uline.com

PAGE 4 OF 14 0624 IH-10735

EYE WASH STATION DETAIL
NOT TO SCALE

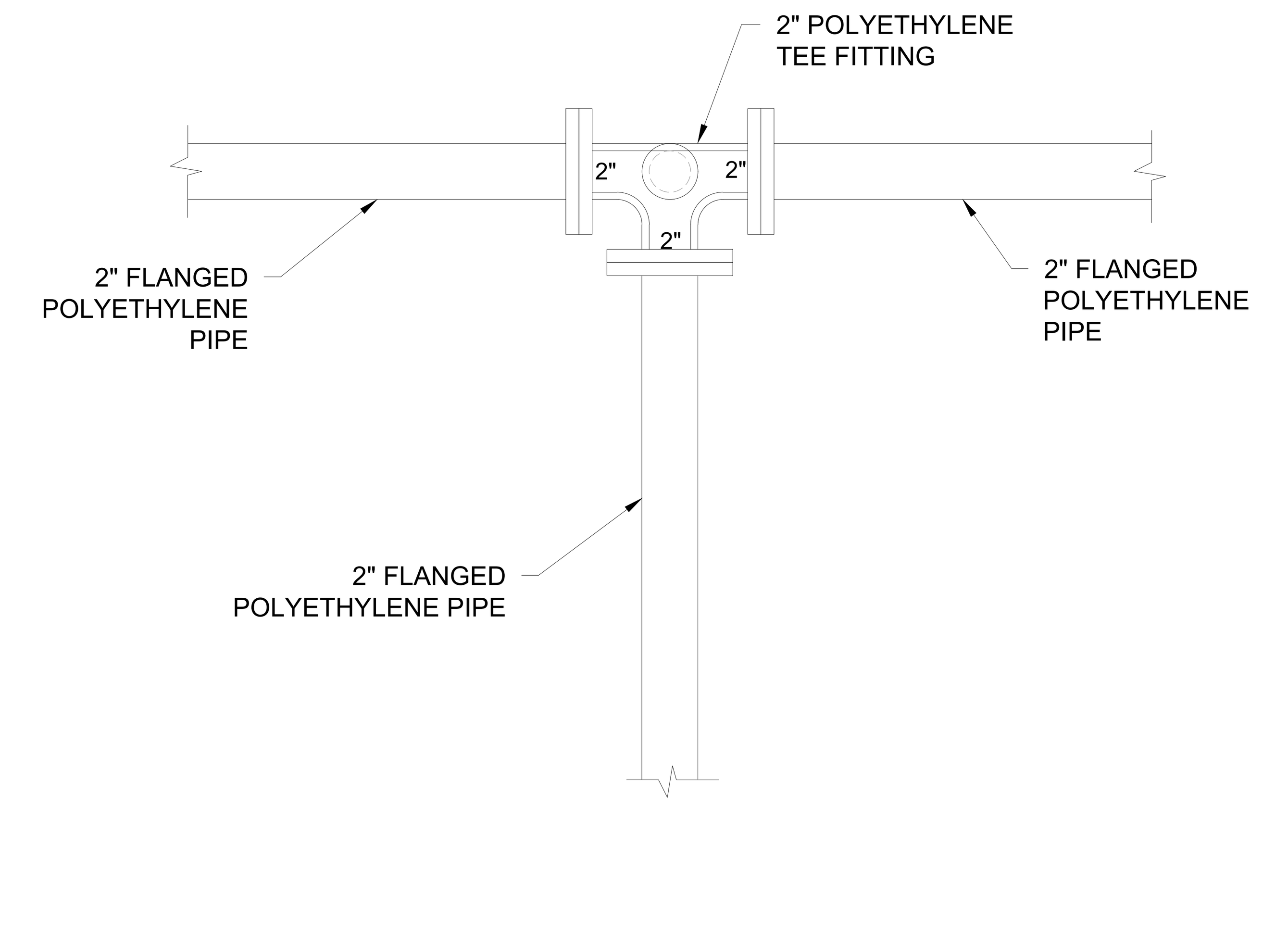

GAS SERVICE LINE DETAIL
NOT TO SCALE

CHS2 H-20 Rated Aluminum Hatch

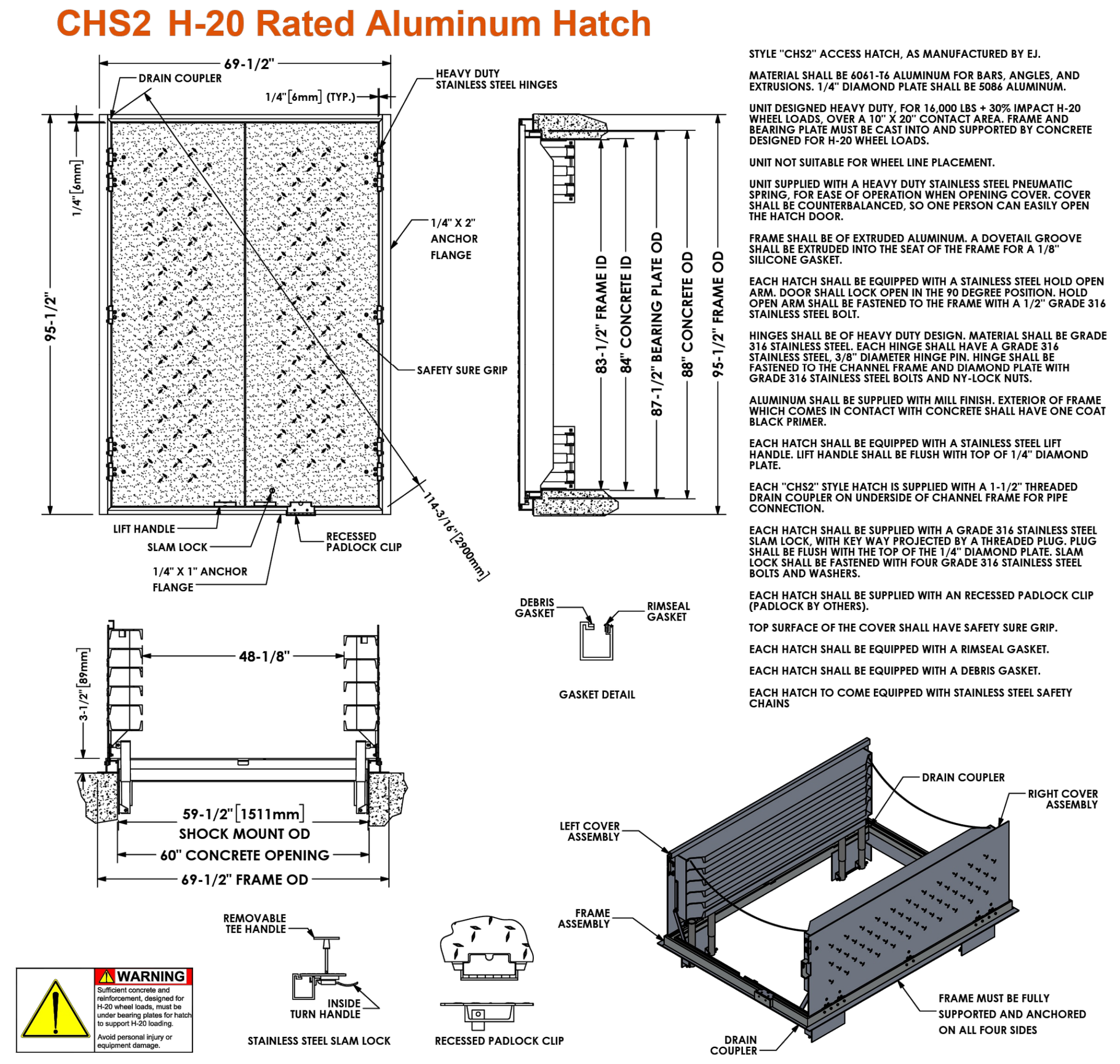

STYLE "CHS2" ACCESS HATCH, AS MANUFACTURED BY EJ.

MATERIAL SHALL BE 6061-T6 ALUMINUM FOR BARS, ANGLES, AND EXTRUSIONS. 1/4" DIAMOND PLATE SHALL BE 5086 ALUMINUM.

UNIT DESIGNED HEAVY DUTY, FOR 16,000 LBS + 30% IMPACT H-20 WHEEL LOADS, OVER A 10" X 20" CONTACT AREA. FRAME AND BEARING PLATE MUST BE CAST INTO AND SUPPORTED BY CONCRETE DESIGNED FOR H-20 WHEEL LOADS.

UNIT NOT SUITABLE FOR WHEEL LINE PLACEMENT.

UNIT SUPPLIED WITH A HEAVY DUTY STAINLESS STEEL PNEUMATIC SPRING, FOR EASE OF OPERATION WHEN OPENING COVER. COVER SHALL BE COUNTERBALANCED, SO ONE PERSON CAN EASILY OPEN THE HATCH DOOR.

FRAME SHALL BE OF EXTRUDED ALUMINUM. A DOVETAIL GROOVE SHALL BE EXTRUDED INTO THE SEAT OF THE FRAME FOR A 1/8" SILICONE GASKET.

EACH HATCH SHALL BE EQUIPPED WITH A STAINLESS STEEL HOLD OPEN ARM. DOOR SHALL LOCK OPEN IN THE 90 DEGREE POSITION. HOLD OPEN ARM SHALL BE FASTENED TO THE FRAME WITH A 1/2" GRADE 316 STAINLESS STEEL BOLT.

HINGES SHALL BE OF HEAVY DUTY DESIGN. MATERIAL SHALL BE GRADE 316 STAINLESS STEEL. EACH HINGE SHALL HAVE A GRADE 316 STAINLESS STEEL, 3/8" DIAMETER HINGE PIN. HINGE SHALL BE FASTENED TO THE CHANNEL FRAME AND DIAMOND PLATE WITH GRADE 316 STAINLESS STEEL BOLTS AND NY-LOCK NUTS.

ALUMINUM SHALL BE SUPPLIED WITH MILL FINISH. EXTERIOR OF FRAME WHICH COMES IN CONTACT WITH CONCRETE SHALL HAVE ONE COAT BLACK PRIMER.

EACH HATCH SHALL BE EQUIPPED WITH A STAINLESS STEEL LIFT HANDLE. LIFT HANDLE SHALL BE FLUSH WITH TOP OF 1/4" DIAMOND PLATE.

EACH "CHS2" STYLE HATCH IS SUPPLIED WITH A 1-1/2" THREADED DRAIN COUPLER ON UNDERSIDE OF CHANNEL FRAME FOR PIPE CONNECTION.

EACH HATCH SHALL BE SUPPLIED WITH A GRADE 316 STAINLESS STEEL SLAM LOCK, WITH KEY WAY PROJECTED BY A THREADED PLUG. PLUG SHALL BE FLUSH WITH THE TOP OF THE 1/4" DIAMOND PLATE. SLAM LOCK SHALL BE FASTENED WITH FOUR GRADE 316 STAINLESS STEEL BOLTS AND WASHERS.

EACH HATCH SHALL BE SUPPLIED WITH AN RECESSED PADLOCK CLIP (PADLOCK BY OTHERS).

TOP SURFACE OF THE COVER SHALL HAVE SAFETY SURE GRIP.

EACH HATCH SHALL BE EQUIPPED WITH A RIMSEAL GASKET.

EACH HATCH SHALL BE EQUIPPED WITH A DEBRIS GASKET.

EACH HATCH TO COME EQUIPPED WITH STAINLESS STEEL SAFETY CHAINS

ej

Product Number
H60841918

Design Features
-Materials: Aluminum
-Design Load: Heavy Duty (Not in Driving Lane)
-Open Area
-Coating
-√ Designates Machined Surface

Certification
- NPR21-003108
- 202107-30139
- Estimated Weight: 651 LBS
- Country of Origin: USA
- Revision Level: A

Drawing Revision
4/17/2023 Designer: PJC
04/17/2023 Revised By: TYM

Disclaimer
Weights (lbs/kg), dimensions (inches/mm) and drawings provided for your guidance. We reserve the right to modify specifications without prior notice.

Quality is very important for EJ, and it includes compliance to measurements and features in this drawing. We are constantly looking at innovation with optimized designs and materials. Please check our website ejco.com for more information. Technical information contained in this drawing represents intellectual property of EJ. If you are using it in other documents please contact EJ, us.sales@ejco.com. Copyright © 2017 EJ GROUP, Inc. All rights reserved.

Contact
800 626 4653
ejco.com

ej

59-1/2" x 83-1/2" Aluminum Access Hatch Assembly, 3-1/2" Tall Channel Frame, Gasketed, Safety Chains, SSG, 2 Doors, Lift Assist, RPC, Slam Lock, H-20 Unintended Traffic
Product: H60841918

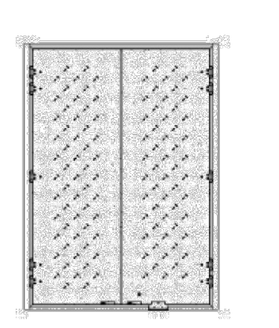

Classic Series:	600840
Product Type:	Hatch Assembly
Badging Classification:	Blank
Shape:	Rectangle
Cover Style:	Ribbed, Solid
Frame Style:	Top Flange, Channel
Clear Opening Length:	59.5 in
Clear Opening Width:	83.5 in
Flange Outer Length:	69.5 in
Flange Outer Width:	95.5 in
Flange Inner Length:	60 in
Flange Inner Width:	84 in
Frame Height:	3.5 in
Cover/Grate Quantity:	2
Hinge Type:	Stainless Steel Hinge
Hinged Quantity:	10
Load Rating:	H20 Loading
Material Specification:	Aluminum 6061-T6, Aluminum 5086
Material Type:	Aluminum
Fastener Material:	Stainless Steel
Gasket Installed:	Yes
Gasket Material:	Other
Gasket Style:	Other
Pick Options:	Lift Handle
Lift Assist:	Pneumatic Spring
Lock Type:	Recessed Padlock Clip, Slam Lock
Anchor Studs:	Yes
Safety Features:	Safety Chain, Hold Open Arm

ejco.com 800 626 4653

Copyright © 2025 EJ Group, Inc. All rights reserved.

BACKFLOW VAULT ALUMINUM HATCH DETAIL
NOT-TO-SCALE

ESG ENGINEERING
6400 Peake Rd
Macon, GA 31210
Ph: (478) 474-4996
Fax: (478) 474-5045

GROUNDWATER WELLS #4 & #5
FOR THE
CITY OF FLOWERY BRANCH

REVISIONS

NO.	DESCRIPTION	DATE
1	ESPC SHEETS	11-7-25
2	REVISED WITH CITY COMMENTS	12-1-25

CONFORMED SET



DRAWN BY: DSC
CHECKED BY: ADS
DATE: OCT 2025
SCALE: N.T.S.

CONTENT:
CONSTRUCTION DETAILS

SHEET NO:
C9.2

Last Saved By: Eleonard   Plotted: 12/2/2025 9:21 AM
Drawing Path: Z:\Engineer Projects\F0002 - FLOWERY BRANCH, CITY OF\Fxxxx.xxx Groundwater Well Restoration\Base\CAD\C0-COVER & DETAILS.dwg

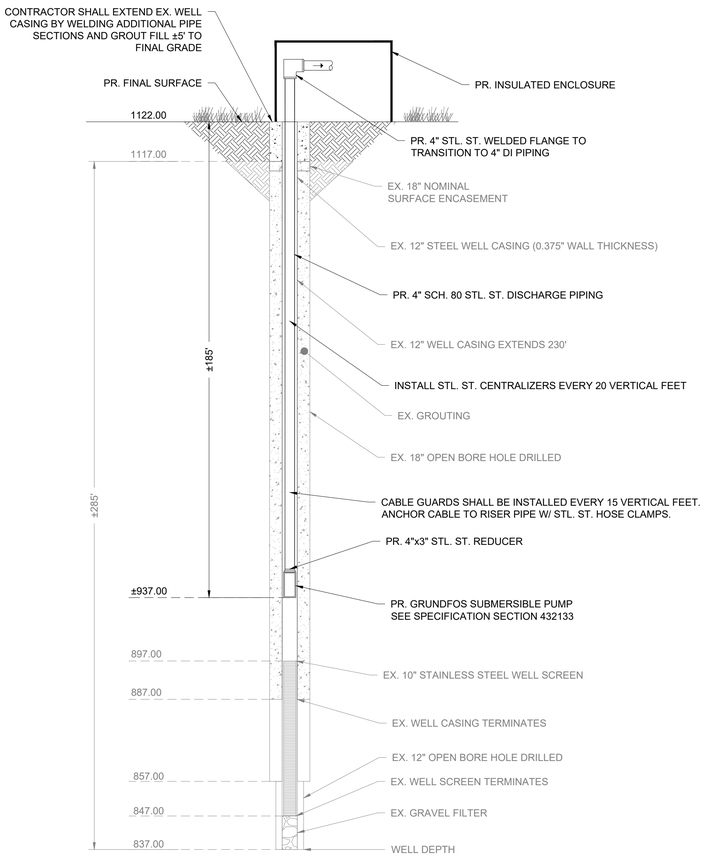

HENDERSON WELL SECTION
NOT TO SCALE

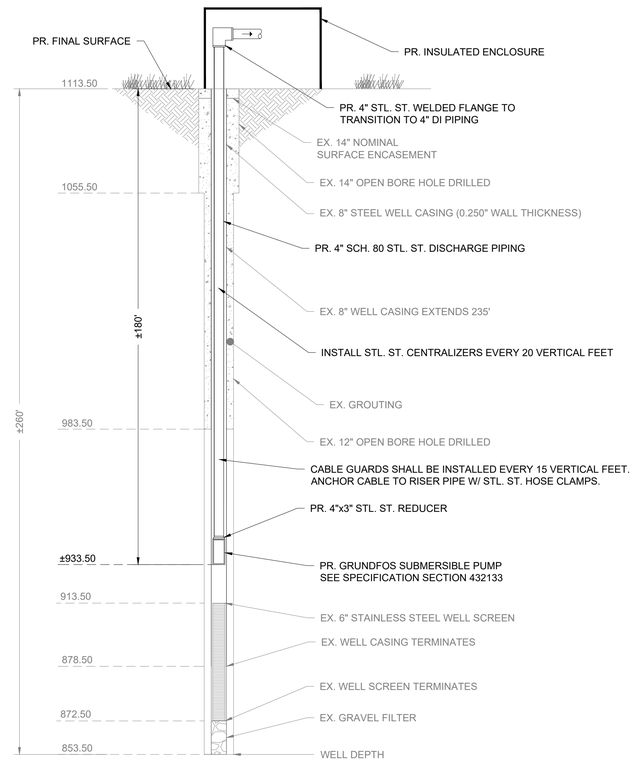

WATERSTONE WELL SECTION
NOT TO SCALE

NOTES:

1. PRECAST CONCRETE VAULT SHALL BE BY TINDALL OR APPROVED EQUIVALENT.
2. VAULT SHALL NOT BE LOCATED IN AREA SUBJECT TO GROUND WATER RUNOFF, STORM DRAIN COLLECTION AND DISCHARGE, OR AREAS PRONE TO CONSTANT WATER INFILTRATION. VAULT SHALL BE ABLE TO DRAIN BY GRAVITY OR BY ALTERNATE MEANS.
3. HATCH DOOR TO BE LOCATED OVER METER ASSEMBLY FOR EASE OF REMOVAL.
4. CONTRACTOR TO SEAL ALL OPENINGS IN VAULT WITH LS-200 LINK SEAL & NON-SHRINK GROUT.
5. FOR FINAL APPROVAL, ASSEMBLY MUST BE SET IN VAULT AS SPECIFIED. UNDER NO CONDITION WILL ANY CONNECTION BE ALLOWED BETWEEN THE SERVICE METER AND BACKFLOW PREVENTER USED FOR SYSTEM CONTAINMENT. BACKFLOW PREVENTER SHALL BE INSTALLED DOWNSTREAM OF ALL METERS.
6. ALL BACKFLOW PREVENTION DEVICES MUST BE SUCCESSFULLY TESTED PRIOR TO FINAL ACCEPTANCE BY THE ENGINEER.

MATERIALS		
ITEM	QTY	DESCRIPTION
1	1	6'x8' PRECAST CONCRETE VAULT
2	1	ALUMINUM HATCH W/ LOCKING HASP
3	1	WALL-MOUNTED STEEL LADDER
4	1	6" 709DCDA DOUBLE CHECK DETECTOR ASSEMBLY
5	1	#57 STONE BEDDING
6	3	STANDON S-89 FLANGED PIPE SUPPORT
7	2	6" FLxRJ DUCTILE IRON PIPE SPOOL PIECE
8	2	6" MECHANICAL JOINT W/ MEGALUG (OR EQUIVALENT)
9	2	LS-200 LINK SEAL
10	1	3" PVC DRAIN PIPING W/ FILTER FABRIC
11	1	1.5" DOMESTIC WATER LINE
12	1	CURB STOP / ISOLATION VALVE
13	1	WATER METER
14	1	BACKFLOW PREVENTER
15	1	METER BOX

BACKFLOW VAULT NOTES
NOT-TO-SCALE

7

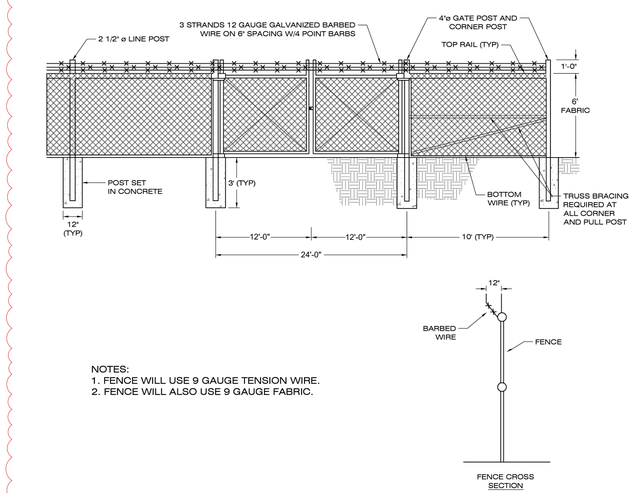

NOTES:
1. FENCE WILL USE 9 GAUGE TENSION WIRE.
2. FENCE WILL ALSO USE 9 GAUGE FABRIC.

CHAIN LINK FENCE & GATE DETAIL
NOT TO SCALE

INSULATED FIBERGLASS ENCLOSURE SIZING GRID



	OUTSIDE TOP	LOWER COVER	BOTTOM AT UPPER BASE	OUSIDE BASE FLANGE	COVER HEIGHT	OVERALL HEIGHT
MODEL #	A—B	C—D	E—F	G—H	I	J
D-103	20.75 x 6.00	27.25 x 12.25	30.25 x 14.75	33.75 x 18.25	21.5	23.25
D-104	31.75 x 5.75	38.25 x 12.25	41.25 x 15	44.25 x 18	20.75	23.5
D-102	22.25 x 15.75	26.5 x 20	29 x 22.25	33 x 26.25	25.75	28.5
D-102-39	22.25 x 15.75	25.75 x 19.25	31 x 25	34 x 27.75	25.75	39
D-105	41.25 x 17.50	47 x 22.75	49 x 25	53.5 x 29.5	23.5	25.5
D-105-36	41.25 x 17.50	47 x 22.75	52 x 28	55 x 31	23.5	36
D-100	30 x 20.75	41.5 x 32.5	44 x 35	48.5 x 39.75	34.75	37
D-106	39 x 31.25	49 x 40.5	50.75 x 42.5	54.75 x 46.5	40	43.5
D-207	48.75 x 32	55.5 x 37.5	59.5 x 40.5	65 x 46	35.5	37.25
D-207-48	48.75 x 32	55.5 x 37.5	63 x 44	65.5 x 47	35.5	48
D-108	64.5 x 31.5	68.5 x 34.5	70.5 x 36.5	74.5 x 40.5	44.25	46.25
D-301	74.63 x 46.5	82.5 x 54.5	86.5 x 59	90.5 x 63	26.75	33.75
D-303	74.63 x 46.5	82.5 x 54.5	86.5 x 59	90.5 x 63	46	53

GENERAL SPECIFICATIONS

The molded fiberglass enclosure shall be constructed with rigid thixotropic polyester resin and 30% chopped glass in 1-1/2 to 2-inch random patterns of 1/8 to 3/16 inch thick. The exterior finish shall be White isophthalic gel-coating .02 to .04 inches. The inside surface shall be insulated with 2 lb.-density sprayed-on polyurethane foam, producing an R-14 to R-19 composite value. The fiberglass base flange shall be hinged using 3-1/2-inch noncorrosive polycross link hinges or 3 x 4-inch stainless steel. A 30 lb. spring-loaded latch hooks to a 7-inch cast aluminum handle.

WELL HOUSE FIBERGLASS ENCLOSURE DETAIL
NOT-TO-SCALE

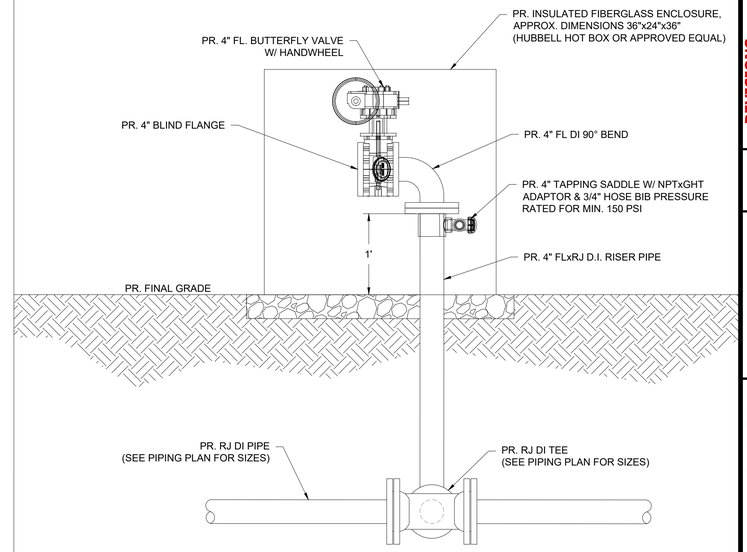

WELL BLOW-OFF VALVE DETAIL
NOT-TO-SCALE

ESG ENGINEERING
6400 Peake Rd
Macon, GA 31210
Ph: (478) 474-4996
Fax: (478) 474-5045

GROUNDWATER WELLS #4 & #5

FOR THE

CITY OF FLOWERY BRANCH

REVISIONS		
NO.	DESCRIPTION	DATE
1	ESPC SHEETS	11-7-25
2	BID SET OF PLANS	12-1-25
3	REVISED WITH CITY COMMENTS	12-5-25
4	ADDENDUM #1	12-8-25
5	ADDENDUM #2	12-11-25
6	ADDENDUM #3	12-12-25
7	REVISED WITH CITY COMMENTS	12-17-25

CONFORMED SET

GEORGIA REGISTERED No. PE046341 PROFESSIONAL ENGINEER ANDREW D SWICEGOOD

DRAWN BY: DSC
CHECKED BY: ADS
DATE: OCT 2025
SCALE: N.T.S.

CONTENT:

CONSTRUCTION DETAILS

SHEET NO: 3 6 7

C9.3

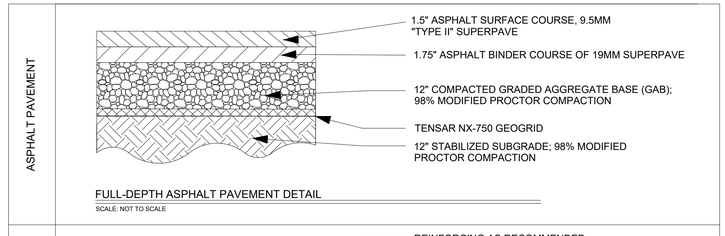

FULL-DEPTH ASPHALT PAVEMENT DETAIL

SCALE: NOT TO SCALE

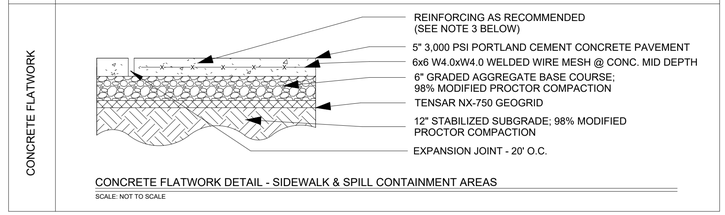

CONCRETE FLATWORK DETAIL - SIDEWALK & SPILL CONTAINMENT AREAS

SCALE: NOT TO SCALE

PAVEMENT NOTES:

1. THE SUBGRADE MATERIALS SHALL BE PROOF ROLLED AND/OR SCARIFIED AND COMPACTED PRIOR TO PLACEMENT OF BASE MATERIAL. WHERE EXISTING SUBGRADE MATERIALS ARE UNSUITABLE, THEY SHALL BE REMOVED AND REPLACED WITH COMPACTED SELECT MATERIAL IN ACCORDANCE WITH GEOTECHNICAL RECOMMENDATIONS.
2. PAVEMENTS SHOULD BE SEPARATED FROM THE HIGH PLASTICITY/ELASTICITY SOILS ENCOUNTERED AT THIS SITE WITH A MINIMUM OF 12" SUITABLE STRUCTURAL FILL. DUE TO THE DEEPER LOW CONSISTENCY SOILS ENCOUNTERED AT THIS SITE, A LAYER OF TENSAR NX-750 GEOGRID SHALL BE INCLUDED IN PAVEMENT DESIGN. AFTER UNDERCUTTING AND REPLACEMENT OF THE UPPER 12" OF HIGHLY PLASTIC OR ELASTIC SOILS, THE SUBGRADE SHALL BE PREPARED AS NOTED IN EARTHWORK.
3. ALL JOINTS MUST BE SEALED WITH AN APPROVED SEALANT. STEEL REINFORCING SHALL BE USED AT JOINTS. REFER TO ACI 330R (GUIDE FOR DESIGN AND CONSTRUCTION OF CONCRETE PARKING LOTS) FOR JOINT DESIGN AND LAYOUT.

PAVEMENT DETAILS

NOT TO SCALE

STRUCTURAL NOTES:

1. PAD SIZE SHALL BE MINIMUM INDICATED OR AS SHOWN ON THE PLANS OR AS INDICATED BY THE MANUFACTURER AND APPROVED BY THE ENGINEER.
2. THE SIZE, NUMBER, TYPE, LOCATION, AND THREAD PROJECTION OF THE ANCHOR BOLTS SHALL BE DETERMINED BY THE EQUIPMENT MANUFACTURER AND AS APPROVED BY THE ENGINEER. ANCHOR BOLTS SHALL BE HELD IN POSITION WITH A TEMPLATE OR OTHER ACCESSIBLE MEANS, MATCHING THE BASE PLATE, WHILE PAD IS BEING PLACED.
3. ANCHOR BOLT SLEEVES SHALL BE USED TO PROVIDE MINIMUM ANCHOR BOLT MOVEMENT OF 1/2" IN ALL HORIZONTAL DIRECTIONS. THE MINIMUM SLEEVE LENGTH SHALL BE 8 TIMES THE BOLT DIAMETER.
4. ANCHOR BOLT SLEEVES SHALL HAVE A MINIMUM INTERNAL DIAMETER 1" GREATER THAN BOLT DIAMETER AND A MAXIMUM INTERNAL DIAMETER 3" GREATER THAN ANCHOR BOLT DIAMETER. SLEEVES SHALL BE FILLED WITH NON-SHRINK GROUT AFTER BOLTS ARE ALIGNED.
5. EQUIPMENT BASES SHALL BE INSTALLED LEVEL UNLESS INDICATED OTHERWISE.
6. WEDGES, SHIMS, OR LEVELING NUTS SHALL BE USED TO SUPPORT THE BASE WHILE THE NON-SHRINK GROUT IS PLACED. WEDGES OR SHIMS THAT ARE LEFT IN PLACE SHALL NOT BE EXPOSED TO VIEW.
7. HEIGHT OF PADS SHALL BE MINIMUM REQUIRED FOR ANCHOR BOLT CLEARANCE TO KEEP ANCHOR BOLT ABOVE SUPPORTING SLAB (SEE TABLE BELOW). WHERE EQUIPMENT OR PIPING ELEVATION REQUIRE A PAD HEIGHT LESS THAN THE MINIMUM SHOWN, USE TYPE "B" EQUIPMENT PAD WITH BLOCKOUT.
8. AT CONTRACTOR'S OPTION, CONCRETE ANCHORS MAY BE USED IN LIEU OF CAST-IN-PLACE ANCHOR BOLTS FOR EQUIPMENT ANCHOR BOLTS LESS THAN 3/4" DIAMETER WHEN APPROVED BY THE EQUIPMENT MANUFACTURER AND ENGINEER. ANCHORS SHALL BE INSTALLED WITH THE 6 MINIMUM EDGE DISTANCE IN EACH DIRECTION.

AB DIA. (IN)	1/2	5/8	3/4	7/8	1	1-1/4	1-3/8	1-1/2	1-3/4	2
MIN. PAD HT (IN)	7	8-1/2	10	11	12-1/2	15	16-1/2	18	21	24

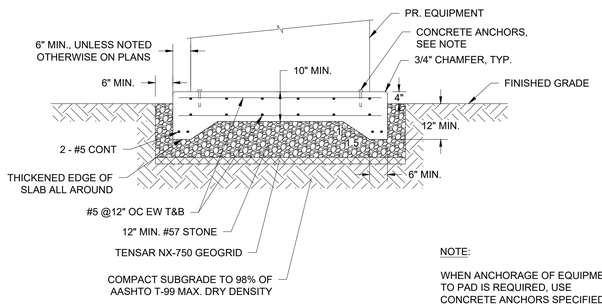

NOTE:

WHEN ANCHORAGE OF EQUIPMENT TO PAD IS REQUIRED, USE CONCRETE ANCHORS SPECIFIED

GENERATOR SLAB DETAIL

SCALE: N.T.S.

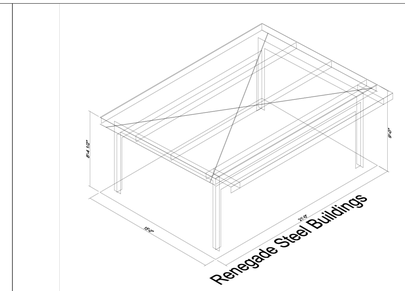

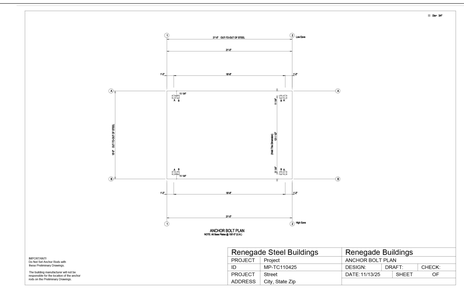

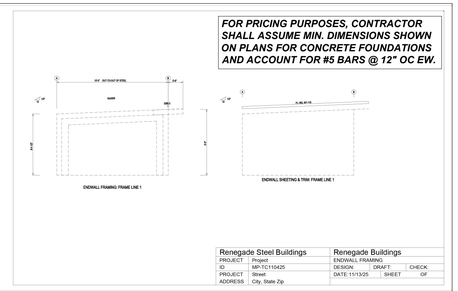

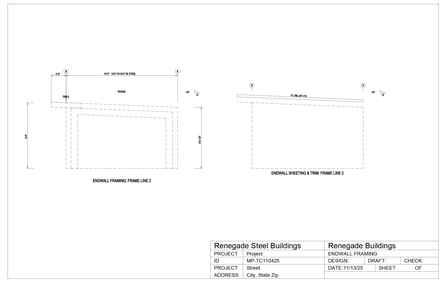

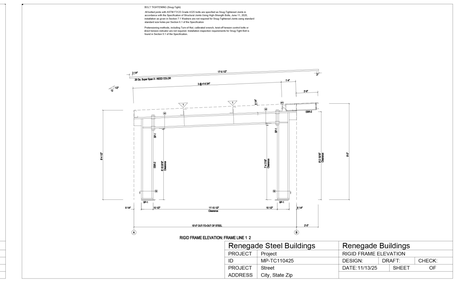

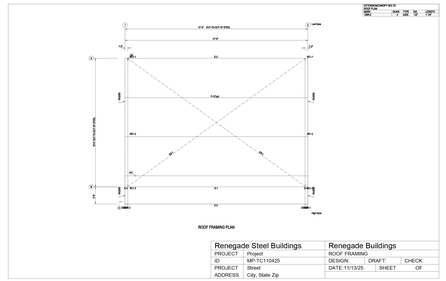

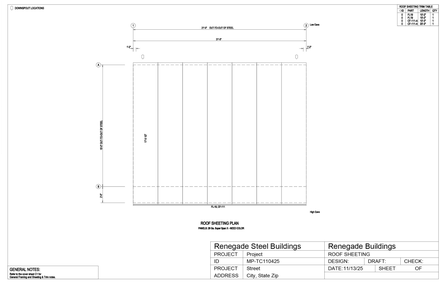

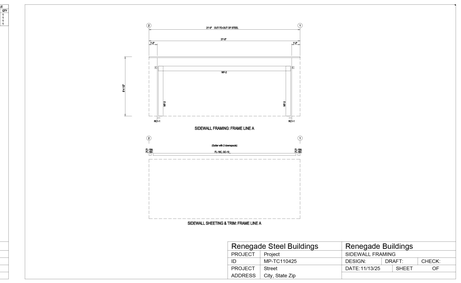

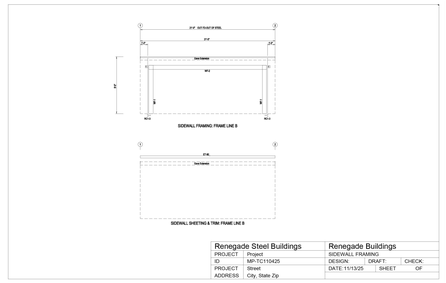

COVERED STEEL STRUCTURE DETAILS

NOT TO SCALE

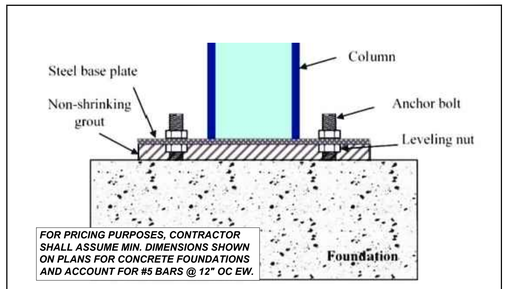

NOTE: RENEGADE STEEL WILL PROVIDE FINAL STRUCTURAL DESIGN OF COVERED AREA AND FOOTERS

COVERED STEEL STRUCTURE - COLUMN INSTALLATION INTO FOUNDATION DETAIL

NOT TO SCALE

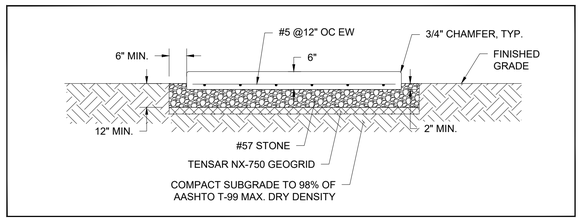

WELL PUMP & HVAC EQUIPMENT SLAB DETAIL

SCALE: N.T.S.

ESG ENGINEERING
6400 Peake Rd
Macon, GA 31210
Ph: (478) 474-4996
Fax: (478) 474-5045

GROUNDWATER WELLS #4 & #5

FOR THE

CITY OF FLOWERY BRANCH

REVISIONS

NO.	DESCRIPTION	DATE
1	ESPC SHEETS	11-7-25
2	REVISED WITH CITY COMMENTS	12-1-25

CONFORMED SET

GEORGIA REGISTERED No. PE046341 PROFESSIONAL ENGINEER ANDREW D SWICEGOOD

DRAWN BY: DSC
CHECKED BY: ADS
DATE: OCT 2025
SCALE: N.T.S.

CONTENT:

CONSTRUCTION DETAILS

SHEET NO:

C9.4

Last Saved By: Eleonard
Plotted: 12/2/2025 9:21 AM
Drawing Path: Z:\Engineer Projects\F0002 - FLOWERY BRANCH, CITY OF\Fxxxx.xxx Groundwater Well Restoration\Base\CAD\C0-COVER & DETAILS.dwg

USABlueBook GET THE BEST TREATMENT™

‹ Back to overview



Chemical Injection Quill, PVC, 3/4" NPT(M) x 3/4" NPT(M)

Item number 350546

Catalog Page	162
Net weight	0.2
Condition	New
Special Savings	Standard Pricing

+ Hover to zoom | Click to enlarge

Product Details

- **Built-in check valve prevents backflow**

These chemical injection quills feature a built-in spring-loaded check valve that prevents backflow. Quills are 2-3/4" long. Longer lengths (up to 24") are available as special order; contact us for details.

Tech Specs:

Connection: 3/4" NPT(M) x 3/4" NPT(M)	
Body: PVC	
Ball: ceramic	
Spring: Hastelloy C-276	
PSI: 150	

Our Business
› Home
› About Us
› Careers
› Catalog Request

Resources
› Return Policy
› Se habla español
› World Service
› Terms & Conditions

4" & 6" CHEMICAL INJECTORS AND SADDLE TAP
NOT TO SCALE

USABlueBook GET THE BEST TREATMENT™



Koflo Injection Quill, 1", 5" Stinger, PVC, QP-1.0-5

Item number 351708

Brand Name	Koflo Corporation
Catalog Page	164
Net weight	1
Condition	New
Special Savings	Standard Pricing

+ Hover to zoom | Click to enlarge

Product Details

- **NSF-61 Certified**
- **PVC body quills are great with chlorine**
- **1" NPT(F) x 1" NPT(M) Connection**

These non-metallic injection quills are suitable for a wide range of chemicals. Use PVC quills for chlorine. PVC is rated to 100°F

and 150 psi. They have a cracking pressure of 5 psi.

Tech Specs:

Connection Size: 1" NPT(F) x 1" NPT(M)
Material: PVC/Ceramic
Quill Length: 5"
PSI: 150

ESG ENGINEERING
6400 Peake Rd
Macon, GA 31210
Ph: (478) 474-4996
Fax: (478) 474-5045

GROUNDWATER WELLS #4 & #5
FOR THE
CITY OF FLOWERY BRANCH

REVISIONS

NO.	DESCRIPTION	DATE
1	ESPC SHEETS	11-7-25
2	REVISED WITH CITY COMMENTS	12-1-25

CONFORMED SET

GEORGIA REGISTERED No. PE046341 PROFESSIONAL ENGINEER ANDREW D SWIGERT

DRAWN BY: DSC
CHECKED BY: ADS
DATE: OCT 2025
SCALE: N.T.S.

CONTENT:
CONSTRUCTION DETAILS

SHEET NO:
C9.5

Last Saved By: Eleonard
Plotted: 12/2/2025 9:21 AM
Drawing Path: Z:\Engineer Projects\F0002 - FLOWERY BRANCH, CITY OF\Fxxxx.xxx Groundwater Well Restoration\Base\CAD\C0-COVER & DETAILS.dwg

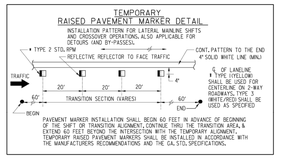

STANDARD LEGEND

- STRIPED DRUM
- TYPE III BARRICADES
- SPECIAL BARRICADE WITH BI-DIRECTIONAL, TYPE "C" STEADY BURNING LIGHT OR HIGHWAY SIGN AS SPECIFIED (SEE DETAIL)
- SEQUENTIAL OR FLASHING ARROW
- PORTABLE CHANGEABLE MESSAGE SIGN
- PERMANENT TYPE POST MOUNTED SIGN
- TEMPORARY POST MOUNTED SIGN
- PORTABLE MOUNTED SIGN - FLAGS NOT REQUIRED
- WORK AREA
- TRAFFIC CONE - 28" MIN. - (DAYTIME USE ONLY)
- FLAGGER WITH STOP-SLOW PADDLE
- TRAFFIC IMPACT ATTENUATOR (CRASH CUSHION)
- TYPE I (CLEAR (WHITE) DELINEATOR - SINGLE FACE
- TYPE I YELLOW DELINEATOR - SINGLE FACE
- TYPE I (CLEAR (WHITE) DELINEATOR DOUBLE FACE
- TYPE I YELLOW DELINEATOR DOUBLE FACE

GENERAL NOTES :

1. ALL TRAFFIC CONTROL DEVICES SHALL BE MADE AND ERECTED IN ACCORDANCE WITH THE DETAILS SHOWN ON THE PLANS, THE MUTCD, THE GEORGIA STANDARD SPECIFICATIONS, AND/OR SPECIAL PROVISIONS. (SEE SECTION 150)
2. ALL TRAFFIC CONTROL DEVICES SHALL BE AS SHOWN, OR AS DIRECTED BY THE ENGINEER. ADDITIONAL DEVICES MAY BE REQUIRED AS DIRECTED BY THE ENGINEER.
3. ALL PORTABLE SIGNS SHALL BE MOUNTED A MINIMUM OF 1FOOT ABOVE THE LEVEL OF PAVEMENT EDGE FOR DIRECTIONAL TRAFFIC OF TWO (2)-LANES OR LESS AND A MINIMUM OF 7 FEET FOR DIRECTIONAL OF THREE (3)-OR MORE LANES. ALL PORTABLE SIGNS AND SIGN MOUNTING DEVICES UTILIZED IN THE WORK SHALL BE NCHRP 350 COMPLIANT. PORTABLE SIGNS MAY BE USED WHEN THE DURATION OF THE WORK IS LESS THAN 3 DAYS.
4. WHEN THE CONSTRUCTION AREA HAS ENTRANCE/EXIT RAMPS OR INTERSECTIONS, WORK WILL BE PERFORMED IN SUCH A MANNER TO PERMIT TRAFFIC TO OPERATE WITH THE LEAST AMOUNT OF INCONVENIENCE AS POSSIBLE. ADDITIONAL CHANNELIZATION AND SIGNING SHALL BE INSTALLED, AS REQUIRED, TO ALLOW TRAFFIC TO REMAIN AS OPERATIONAL AS POSSIBLE. WHEN ENTRANCE RAMPS/INTERSECTIONS ARE INOPERABLE, FLAGGERS WILL BE UTILIZED TO CONTROL AND PROHIBIT MOVEMENT INTO THE PROJECT AT THAT POINT UNTIL CONSTRUCTION HAS CLEARED THE RESTRICTION SUFFICIENT TO RETURN TO OPERATIONAL STATUS.
5. FOR NIGHT TIME OPERATIONS, DRUMS SHALL HAVE, FOR THE LENGTH OF THE TAPER ONLY, A SIX (6") INCH ORANGE REFLECTIZED TOP STRIPE ON EACH DRUM IN THE TAPER AS REQUIRED IN SECTION 150, SPACING OF DEVICES SHALL BE AS SHOWN, DURING DAYLIGHT HOURS, CONES (28" MIN) MAY BE USED IN ADVANCE OF AND THROUGHOUT WORK AREA.
6. SIGN LOCATIONS ARE APPROXIMATE AND MAY BE ADJUSTED TO MEET FIELD CONDITIONS BUT MUST BE WITHIN THE LIMITATIONS SET FORTH IN THE MUTCD.
7. A PORTABLE SELF-SUSTAINED SEQUENTIAL OR FLASHING ARROW SIGN SHALL BE USED AT THE BEGINNING OF EACH LANE CLOSURE ON MULTI-LANE HIGHWAYS. ARROW PANELS SHALL NOT BE USED ON TWO-LANE TWO-WAY HIGHWAYS EXCEPT IN CAUTION MODE.
8. WHEN NOT IN USE, PORTABLE SIGNS SHALL BE REMOVED FROM THE TRAVELWAY SO THAT THE MESSAGE IS NOT VISIBLE TO THE MOTORIST. INTERIM SIGNS THAT ARE PERMANENTLY MOUNTED SHALL BE COVERED WHEN NOT APPLICABLE. SEE SECTION 150.
9. PROJECT SIGNS W20-1, G20-1 & G20-2 FOR THIS PROJECT SHALL BE COORDINATED WITH ADJACENT CONSTRUCTION PROJECTS. ONLY ONE SET OF SIGNS IS REQUIRED IN EACH DIRECTION FOR THE TOTAL LENGTH OF ALL PROJECTS-STONE MOUNTAIN FREEWAY TO I-285. THE SIGNS SHALL BE ERECTED AT THE BEGINNING AND ENDING CONSTRUCTION. ADVANCE CONSTRUCTION SIGNS ARE REQUIRED ON INTERMEDIATE PROJECTS, UNLESS CONSTRUCTED FOR ADJACENT PROJECTS AT COMPLETED BEFOREHAND. WHEN PROJECT CONSTRUCTION SIGNS WILL BE ADDED AS NECESSARY.
10. ALL THE COST OF THE MATERIALS, LABOR AND EQUIPMENT NECESSARY TO COMPLETE THE WORK SHALL BE INCLUDED IN THE PRICE BID FOR THE VARIOUS ITEMS OF WORK INVOLVED AND NO SEPARATE PAYMENT ITEM IN THE PROPOSAL, OTHERWISE, ALL THE COST WILL BE INCLUDED IN THE UNIT PRICE BID FOR THE ITEM, EXCEPT ON CERTAIN PROJECTS SOME ITEMS MAY BE PAID FOR SEPARATELY BY THE UNIT WHEN SPECIFIED ON THE PLANS AND IN THE PROPOSAL.
11. FOR FREEWAY CONSTRUCTION THE CONTRACTOR SHALL ARRANGE HIS WORK SO THAT THERE IS AN EXIT GORE SIGN AND AN EXIT DIRECTION SIGN IN PLACE FOR ALL EXIT RAMPS AT ALL TIMES.
12. ALL CROSSROADS, SIDEROADS, RAMPS, OR OTHER ENTRANCES TO MAINLINE CONSTRUCTION SHALL REQUIRE W20-1 SIGNS LOCATED AS SHOWN IN THE PLANS, OR AS DIRECTED BY THE ENGINEER.
13. MARKINGS AND/OR SIGNS IN CONFLICT WITH INTERIM TRAFFIC CONTROL SHALL BE REMOVED, RELOCATED OR COVERED. APPLICABLE EXISTING AND INTERIM MARKINGS AND/OR SIGNING SHALL BE MAINTAINED PER SECTION 150.
14. ANY CHANNELIZING DEVICES (DRUMS OR BARRICADES) IN CONFLICT WITH CONCRETE BARRIERS SHALL BE OMITTED.
15. CONTRACTOR SHALL PROVIDE THE NECESSARY TRAFFIC CONTROL DURING THE TIE-IN OPERATION.
16. THE TRAFFIC CONTROL DEVICES SHOWN FOR ANY STAGE OF CONSTRUCTION SHALL REMAIN IN PLACE AND BE UTILIZED SO LONG AS NECESSARY FOR THE FOLLOWING STAGES AND SHALL BE REMOVED IMMEDIATELY WHEN NO LONGER REQUIRED. THE DEVICES MAY OR MAY NOT BE SHOWN ON THE PLANS FOR THESE FOLLOWING STAGES. REFER TO THE PLAN SHEET FOR THE INITIAL STAGE FOR THESE TRAFFIC CONTROLS.
17. EXISTING GUIDE SIGNS SHALL REMAIN IN PLACE SO LONG AS THEY DO NOT CONFLICT WITH THE CONSTRUCTION TRAFFIC CONTROL. WHEN THE CONSTRUCTION TRAFFIC CONTROL CONFLICTS WITH THE EXISTING SIGN LOCATION AS DIRECTED BY THE ENGINEER, ANY DISTANCE SHOWN ON THE 1ST SIGN SHALL BE ADJUSTED ACCORDINGLY. IF THE SIGNS CANNOT BE RELOCATED, THEN THE SIGN SHALL BE REMOVED AND STORED AT A PLACE DESIGNATED BY THE ENGINEER. IF NEITHER OF THE ABOVE CAN BE DONE, THEN THE CONTRACTOR SHALL PROVIDE INTERIM GUIDE SIGNS AS COVERED IN SECTION 150.
18. (a) ON PROJECTS WITH LOW OR SOFT SHOULDERS, THE CONTRACTOR SHALL ERECT IMMEDIATELY AHEAD OF CONSTRUCTION OPERATIONS, "LOW/SOFT SHOULDER" WARNING SIGNS AT THE PROJECT TERMINI, AT INTERVALS NOT TO EXCEED 1 MILE AND IMMEDIATELY PAST EACH CROSSROAD.
(b) WHERE THE CONTRACTOR IS NOT RESPONSIBLE FOR SHOULDER CONSTRUCTION, THE DEPARTMENT WILL FURNISH THESE SIGNS FOR THE CONTRACTOR TO PICK UP, TRANSPORT, AND ERECT. THE DEPARTMENT WILL LATER REMOVE AND RETAIN THE SIGNS.

STATE	PROJECT NUMBER	SHEET NO.	TOTAL SHEETS
GA.			

* DISTURBED AREA NOTES

1. THE TOTAL PROJECT SITE IS 2.14 ACRES.
2. THE TOTAL ON-SITE DISTURBED AREA IS 0.86 ACRES (WELL SITE PROJECT).
3. THE TOTAL OFF-SITE DISTURBED AREA IS 0.24 ACRES (WATER MAIN EXTENSION.
4. THE TOTAL PROJECT DISTURBED AREA (INCLUDING ON- AND OFF-SITE AREAS) IS 1.10 ACRES.
5. DUE TO THE PROPOSED ESC/BMP MEASURES AND THE TYPE OF CONSTRUCTION BEING LINEAR, SHALLOW TRENCHING WORK, THE 0.24 ACRES OF "OFF-SITE" AREA IS NOT BEING CONSIDERED AS PART OF THE ON-SITE HYDROLOGY ANALYSIS DUE TO THE INFINITE NUMBER OF FLOW PATHS FOR RUNOFF LEAVING THE LINEAR AREAS OF THE PROJECT. THEREFORE, THE TRUE "ON-SITE" DISTURBED AREA IS ONLY 0.86 ACRES AND DOES NOT REQUIRE WATER QUALITY MITIGATION.

STATE ROUTE 13
(100' RIGHT-OF-WAY)

RAILROAD AVENUE

AMERICAN HOLLY (TYP.)

FLOWERING DOGWOOD (TYP.)

EASTERN REDBUD (TYP.)

10' LANDSCAPING BUFFER

10' BUILDING SETBACK

CHEMICAL FEED BUILDING
FFE: 1122.20
AREA: 392 SF

HENDERSON WELL

WATERSTONE WELL

VIREO DR

AREA
2.141 ACRES
PARCEL ID: 08098 001001, 08098 001002 ,
08098 001003, 08098 001004
CITY OF FLOWERY BRANCH GEORGIA
DEED BOOK 9253, PAGE 463
PLAT BOOK 876, PAGE 1

*LIMITS OF DISTURBANCE
0.86 AC (ON-SITE)
0.24 AC (OFF-SITE)
±1.10 AC (TOTAL)

75' IMPERVIOUS BUFFER

50' LOCAL STREAM BUFFER

25' STREAM BUFFER

30' BUILDING SETBACK

EX. STREAM CENTERLINE

EX. WETLANDS (APPROX.)

EX. WETLANDS (APPROX.)

EX. TOWNHOUSE

PARCEL ID: 08098A000206
WATER STONE CROSSING COMMUNITY ASSOC INC
DEED BOOK 4312, PAGE 80
PLAT BOOK 816, PAGE 154A

PARCEL ID: 08098 01009
KOSWIRE INC.
4600 CANTRELL ROAD
FLOWERY BRANCH, GA 30542
26.72 ACRES

PARCEL ID: 08098 A000206
WATER STONE CROSSING COMMUNITY ASSOCIATION
4611 BEACON RIDGE LANE
FLOWERY BRANCH, GA 30542
15.52 ACRES

18" RCP IE:1124.92
18" RCP IE:1123.17
18" RCP IE:1122.91
15" CMP IE:1121.22
15" CMP IE:1121.03
15" RCP IE:1118.06
15" RCP IE:1117.34
18" RCP IE:1118.84
18" RCP IE:1111.93
96" CMP IE:1107.85
96" CMP IE:1107.73
96" CMP IE:1108.39
96" CMP IE:1108.52
DWCB TOP: 1119.00 IE: 1114.12 18" RCP
DWCB TOP: 1119.29 IE: 1113.93 18" RCP IE: 1113.85 18" CMP
18" CMP IE:1116.56
SWCB TOP: 1122.40 IE: 1116.80 18" CMP

LANDSCAPING NOTES:

1. THE CONTRACTOR SHALL LOCATE AND VERIFY THE EXISTENCE OF ALL UTILITIES PRIOR TO STARTING WORK.
2. THE CONTRACTOR SHALL SUPPLY ALL PLANT MATERIALS IN QUANTITIES SUFFICIENT TO COMPLETE THE PLANTING SHOWN ON ALL DRAWINGS.
3. ALL MATERIAL SHALL CONFORM TO THE GUIDELINES ESTABLISHED BY THE CURRENT AMERICAN STANDARD FOR NURSERY STOCK, PUBLISHED BY THE AMERICAN ASSOCIATION OF NURSERYMEN.
4. NO PLANT SHALL BE PUT INTO THE GROUND BEFORE ROUGH GRADING HAS BEEN COMPLETED AND APPROVED BY THE ENGINEER.
5. ALL PLANTS SHALL BE BALLED AND WRAPPED OR CONTAINER GROWN AS SPECIFIED. NO CONTAINER GROWN STOCK WILL BE ACCEPTED IF IT IS ROOT BOUND. ALL ROOT WRAPPING MATERIAL MADE OF SYNTHETICS OR PLASTICS SHALL BE REMOVED AT TIME OF PLANTING.
6. WITH CONTAINER GROWN STOCK, THE CONTAINER SHALL BE REMOVED AND THE CONTAINER BALL SHALL BE CUT THROUGH THE SURFACE IN TWO VERTICAL LOCATIONS.
7. ALL PLANTS AND STAKES SHALL BE SET PLUM UNLESS OTHERWISE SPECIFIED.
8. ALL PLANTS SHALL BE WATERED THOROUGHLY TWICE DURING THE FIRST 24-HOUR PERIOD AFTER PLANTING. ALL PLANTS SHALL THEN BE WATERED WEEKLY, IF NECESSARY, DURING THE FIRST GROWING SEASON.
9. THE LANDSCAPE CONTRACTOR SHALL REFER TO THE CONTRACT SPECIFICATIONS FOR ADDITIONAL REQUIREMENTS.
10. THE LANDSCAPE CONTRACTOR SHALL REFER TO THE PLANT LIST FOR SEASONAL REQUIREMENTS RELATED TO THE TIME OF PLANTING.
11. THE LANDSCAPE CONTRACTOR IS RESPONSIBLE FOR FULLY MAINTAINING ALL PLANTINGS INCLUDING BUT NOT LIMITED TO WATERING, SPRAYING, MULCHING, FERTILIZING, ETC. OF PLANTING AREAS & LAWNS UNTIL THE WORK IS ACCEPTED IN FULL BY THE OWNER.
12. ALL PLANTS AND PLANTING AREAS MUST BE COMPLETELY MULCHED AT A MINIMUM DEPTH OF 4" USING A SHREDDED HARDWOOD MULCH.
13. ALL SOIL USED FOR PLANTING SHALL CONSIST OF REGIONALLY APPROPRIATE SOILS.
14. TILL SOIL TO A DEPTH OF 4" MINIMUM.
15. REMOVE ALL ROCKS LARGER THAN 1" MEASURED IN LARGEST DIRECTION.

PLANT SCHEDULE

KEY	QTY	BOTANICAL NAME	COMMON NAME	SIZE	NOTES
SMALL TREES					
AG	6	ILEX OPACA	AMERICAN HOLLY	B&B	6-10' TALL AT INSTALLATION
MC	3	CORNUS FLORIDA	FLOWERING DOGWOOD	B&B	4-8' TALL AT INSTALLATION
MC	3	CERCIS CANADENSIS	EASTERN REDBUD	B&B	6-10' TALL AT INSTALLATION
TOTAL	12				

GRAPHIC SCALE 1" = 20'

GEORGIA811 www.Georgia811.com

ESG ENGINEERING
6400 Peake Rd
Macon, GA 31210
Ph: (478) 474-4996
Fax: (478) 474-5045

GROUNDWATER WELLS #4 & #5

FOR THE
CITY OF FLOWERY BRANCH

REVISIONS

NO.	DESCRIPTION	DATE
1	ESPC SHEETS	11-7-25
2	BID SET OF PLANS	12-1-25
3	REVISED WITH CITY COMMENTS	12-5-25
4	ADDENDUM #1	12-8-25
5	ADDENDUM #2	12-11-25
6	ADDENDUM #3	12-12-25
7	REVISED WITH CITY COMMENTS	12-17-25

CONFORMED SET

GEORGIA REGISTERED No. PE046341 PROFESSIONAL ENGINEER ANDREW D SWICEGOOD

DRAWN BY: DSC
CHECKED BY: ADS
DATE: OCT 2025
SCALE: SEE SCALE

CONTENT:

LANDSCAPING:
LANDSCAPING PLAN

SHEET NO: 3 / 7

L1.0

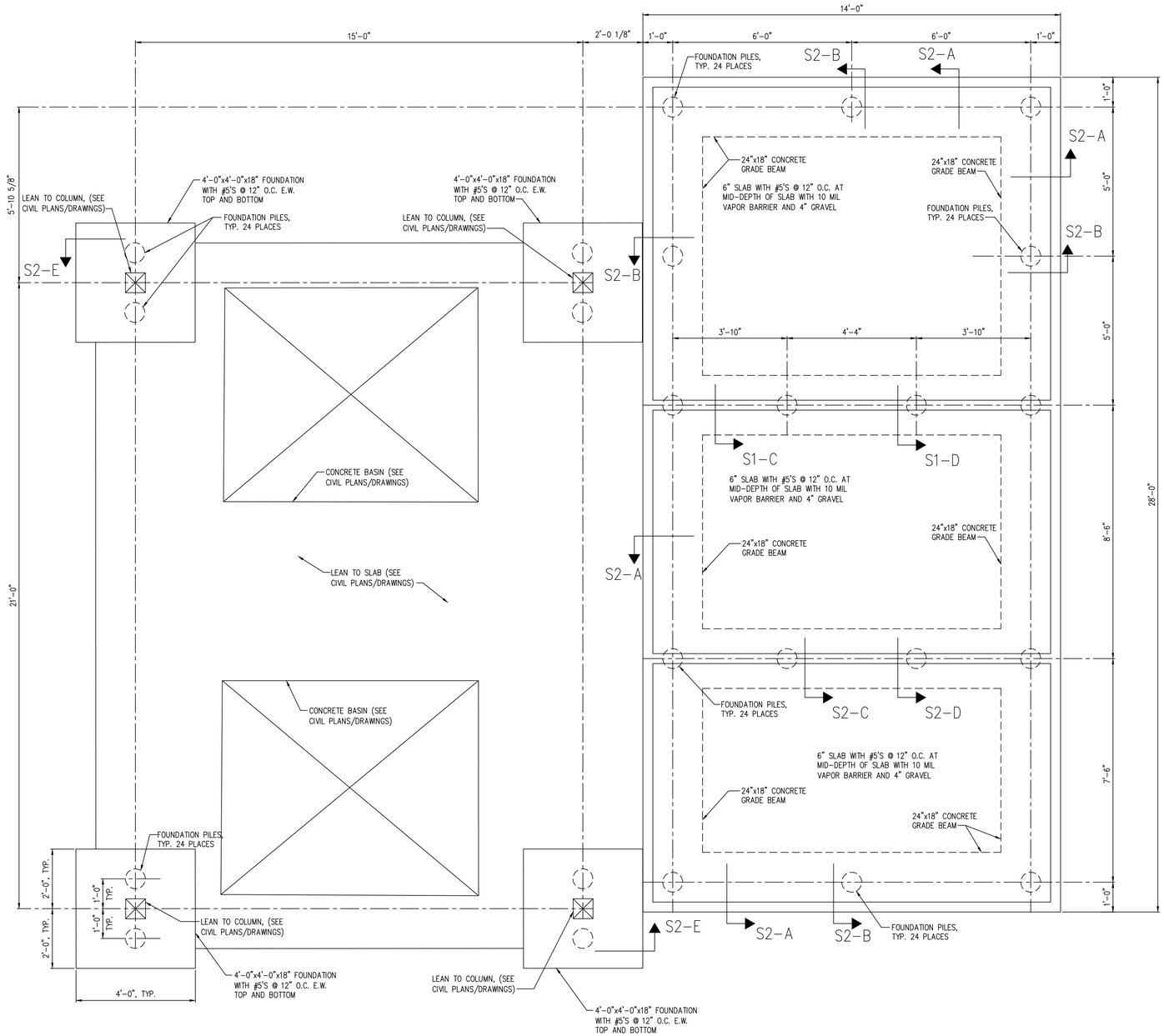

FOUNDATION PLAN

NO SCALE

NOTE: COORDINATE BUILDING ANCHORAGE REQUIREMENTS WITH MANUFACTURER'S DRAWINGS

REINFORCED CONCRETE GENERAL NOTES

1. ALL CONCRETE WORK SHALL CONFORM TO ACI 301, "SPECIFICATIONS FOR STRUCTURAL CONCRETE FOR BUILDINGS". DESIGN IS BASED ON ACI 318, "BUILDING CODE REQUIREMENTS FOR STRUCTURAL CONCRETE."
2. CONCRETE SHALL BE NORMAL WEIGHT (150 PCF) AND SHALL DEVELOP A MINIMUM COMPRESSIVE STRENGTH OF 4500 PSI AT 28 DAYS.
3. SUBMIT CONCRETE MIX DESIGNS FOR REVIEW, IN ACCORDANCE WITH ACI 318 TO THE EOR AND TESTING AGENCY.
4. THE PROPOSED MATERIALS AND MIX DESIGN SHALL BE FULLY DOCUMENTED AND REVIEWED. RESPONSIBILITY FOR OBTAINING THE REQUIRED DESIGN STRENGTH IS THE CONTRACTOR'S.
5. USE OF CALCIUM CHLORIDE, CHLORIDE IONS, OR OTHER SALTS IN CONCRETE IS NOT PERMITTED.
6. THE AIR CONTENT AT THE POINT OF PLACEMENT SHALL BE PER ACI 318 TABLE 4.2.1 FOR MODERATE EXPOSURE.
7. THE TESTING AGENCY SHALL SAMPLE AND TEST EACH 100 CU. YARDS OR FRACTION THEREOF OF EACH CLASS OF CONCRETE PLACED EACH DAY. SAMPLE CONCRETE IN ACCORDANCE WITH ASTM C172. PERFORM THE FOLLOWING TESTS IN ACCORDANCE WITH THE INDICATED STANDARD:

   SLUMP: ASTM C143

   AIR CONTENT: ASTM C231 (NORMAL WEIGHT CONCRETE) ASTM C173 (LIGHT WEIGHT CONCRETE)

   COMPRESSIVE STRENGTH: ASTM C39, WITH ONE CYLINDER AT 7 DAYS, 2 CYLINDERS AT 28 DAYS, AND ONE SPECIMEN HELD IN RESERVE.

   CONCRETE TEMPERATURE: ASTM C1064

   UNIT WEIGHT: ASTM C567
8. MOIST CURE CONCRETE WITH MOISTURE PROTECTIVE COVER FOR A MINIMUM OF 7 DAYS. CURING COMPOUNDS PERMITTED IF COMPATIBLE WITH ANY PLANNED FLOOR FINISHES
9. REINFORCING STEEL SHALL CONFORM TO ASTM A615, GRADE 60, UNLESS NOTED OTHERWISE.
10. TIE ALL REINFORCING STEEL AND EMBEDMENTS SECURELY IN PLACE PRIOR TO PLACING CONCRETE. PROVIDE SUFFICIENT SUPPORTS TO MAINTAIN THE POSITION OF REINFORCEMENT WITHIN SPECIFIED TOLERANCES DURING ALL CONSTRUCTION ACTIVITIES. "STICKING" DOWELS INTO WET CONCRETE IS NOT PERMITTED.
11. REINFORCING STEEL SHALL HAVE THE FOLLOWING CONCRETE COVER UNLESS NOTED OTHERWISE:

    CONCRETE CAST AGAINST EARTH (NOT FORMED): 3"

    FORMED CONCRETE EXPOSED TO EARTH OR WEATHER
    #6 BARS THROUGH #12 BARS 2"
    #5 BARS AND SMALLER 2"

    CONCRETE NOT EXPOSED TO EARTH OR WEATHER
    SLABS AND WALLS 1"
12. DO NOT WELD OR TACK WELD REINFORCING STEEL UNLESS APPROVED OR DIRECTED BY THE STRUCTURAL ENGINEER.

SOIL PARAMETERS

1. SOIL PARAMETERS
   A. SHALLOW FOUNDATIONS WERE ASSUMED TO BE INSUFFICIENT TO SUPPORT BUILDING DUE TO POOR SOIL CONDITIONS. DEEP FOUNDATION ELEMENTS ARE REQUIRED TO SUPPORT THE BUILDING.
   B. RECOMMENDATION IS BASED ON THE FOLLOWING SOILS REPORT:
      DRINKING WATER SITE
      GEOTECHNICAL ENGINEERING REPORT
      TERRACON PROJECT NO. HN255025
      DATED APRIL 3, 2025
2. IF SITE CONDITIONS DIFFER FROM THOSE INDICATED, THE DESIGN PROFESSIONAL SHALL BE NOTIFIED IMMEDIATELY.
3. ALL FOUNDATION WORK SHALL BE DONE 'IN THE DRY'.

GENERAL NOTES

1. DESIGN LOADS
   A. BUILDING LOAD ..... 120,000 LBS.
   B. SLAB LIVE LOAD ..... 100 PSF
   C. ROOF LIVE LOAD ..... 20 PSF
2. CODES:
   A. INTERNATIONAL BUILDING CODE, 2018 ED. WITH LATEST GEORGIA AMENDMENTS.
   B. REINFORCED CONCRETE: ACI 318-14.
3. FOUNDATION DESIGN ASSUMES ALL INTERIOR WALLS ARE LOAD BEARING AND BUILDING WEIGHT IS UNIFORMLY DISTRIBUTED TO FOUNDATION.
4. SHOP DRAWINGS GENERAL NOTES: THE PLANS, SECTIONS, AND DETAILS PROVIDED AS PART OF THE CONTRACT DOCUMENTS SHALL NOT BE USED IN A REPRODUCIBLE FORM AS PART OF THE SHOP DRAWINGS. ALL FABRICATORS & SUPPLIERS SHALL ANTICIPATE THAT REVISIONS TO SUBMITTALS MAY BE REQUIRED. THIS INCLUDES MODIFICATIONS TO DETAILS THAT ARE CHANGED FOR COORDINATION PURPOSES. NO ADDITIONAL FEES ARE PERMITTED FOR REVISING SUBMITTALS FOR WORK DESCRIBED IN THE CONTRACT DOCUMENTS.
5. CONTRACTOR TO FIELD VERIFY ALL DIMENSIONS AND ELEVATIONS BEFORE BEGINNING CONSTRUCTION.
6. SEE ESG DRAWINGS AND SPECIFICATIONS FOR REQUIREMENTS ON FLOOR AND WALL COATINGS

FOUNDATION PILE NOTES (PER UNIT)

1. IT IS THE INTENT OF THIS CONTRACT REQUIREMENT TO PROVIDE:
   A. VERTICAL FOUNDATION PILES (24 TOTAL) OF SIZE AND DETAIL THAT WILL ACHIEVE NOT LESS THAN 50,000 POUNDS ULTIMATE (25,000 POUNDS WORKING) COMPRESSION CAPACITY, AND 10,000 POUNDS ULTIMATE (5,000 POUNDS WORKING) TENSION CAPACITY, BEFORE FAILURE.
2. INSTALLATION OF PILES IS TO BE PERFORMED BY A PILE CONTRACTOR APPROVED BY THE OWNER.
3. MINIMUM VERTICAL PILE LENGTH SHALL BE 28 FEET REGARDLESS OF FIELD DETERMINED EXCESS CAPABILITY, EXCEPT THAT, IF DURING CONSTRUCTION PROGRESS, IT IS DETERMINED THAT ANY EXCESSIVE CAPACITY ACHIEVED DURING INSTALLATION IS CAUSING DELAYS OR UNDUE HARDSHIP, THE OWNER RESERVES THE RIGHT TO WAIVE THIS REQUIREMENT (BUT NOT BELOW SPECIFIED ULTIMATE CAPACITY) WITH APPROPRIATE CONTRACT AND CONTRACT PRICE CHANGES AGREED UPON BY OWNER AND CONTRACTOR.
4. PILE CONTRACTOR SHALL HAVE ALL REASONABLE ACCESS TO THE SITE, BOTH BEFORE AND AFTER SUCCESSFUL BIDDING, BUT SCHEDULING SHALL BE COORDINATED WITH THE EOR/OWNER. ALL INSURANCE, SAFETY, LEGAL, AND OTHER AGREED UPON REQUIREMENTS SHALL BE MET BY THE PILE CONTRACTOR BEFORE PERFORMING ANY WORK. IT SHALL BE THE RESPONSIBILITY OF THE PILE CONTRACTOR TO REVIEW THE SITE TO THEIR SATISFACTION PRIOR TO BIDDING. NO CONTRACT CHANGES ARE PERMISSIBLE BECAUSE OF LACK OF KNOWLEDGE OF REASONABLY ACCESSIBLE FEATURES ON THE SITE.
5. SOIL TEST REPORTS ARE INCLUDED IN THE BID PACKAGE. ANY INFERENCE DRAWN FROM THE REPORT, EXCEPT WHERE THE REPORT MIGHT BE FOUND ERRONEOUS, SHALL BE THE RESPONSIBILITY OF THE PILE CONTRACTOR.
6. DESIGN OF ALL PILE COMPONENTS TO MEET REQUIREMENTS SHALL BE PERFORMED BY A PROFESSIONAL ENGINEER REGISTERED IN THE STATE OF GEORGIA, EITHER EMPLOYED BY, OR RETAINED BY THE CONTRACTOR, WHO IS QUALIFIED AND EXPERIENCED IN THE EVALUATION OF THE PILE SYSTEM. SIGNED AND SEALED CALCULATIONS SHALL BE PROVIDED TO THE EOR/OWNER FOR REVIEW. CALCULATIONS SHALL INCLUDE AN ANALYSIS OF THE PILE FOR BUCKLING.
7. PILE CONTRACTOR SHALL PROVIDE WITH THEIR BID A RESUME OF JOBS OF SIMILAR DETAIL AND QUANTITY THAT THEY HAVE PERFORMED.
8. WORK SHALL BE PERFORMED IN AN ORDERLY AND WORKMANLIKE FASHION. SCHEDULING SHALL BE MAINTAINED. PILES SHALL BE LOCATED WITHIN APPROXIMATELY 3" OF THEIR SHOWN LOCATION, AND SHALL BE BATTERED AS SHOWN. PILE CONTRACTOR SHALL PROVIDE ALL LABOR AND MATERIALS AS REQUIRED AND SHALL HAVE A FULL-TIME SUPERINTENDENT ON SITE FOR THE DURATION OF CONSTRUCTION. DAILY RECORDS SHALL BE MADE AND MAINTAINED ON SITE. RECORDS SHALL BE MADE AVAILABLE TO EOR UPON REQUEST. RECORDS SHALL INCLUDE PILE DEPTH TORQUE LOG AND ESTIMATED CAPACITY.
9. AT THE END OF EACH WORK DAY, THE AREA AROUND THE FOUNDATION SITE SHALL BE LEFT IN A CONDITION THAT WILL NOT INTERFERE WITH OTHER TRADES OR THAT WILL NOT POSE A DANGER TO OTHERS ON SITE.
10. CONTRACTOR SHALL PROPOSE AN ALTERNATIVE ADDITIVE TEST PILE PROGRAM AT THE BEGINNING OF THE PROJECT. THE PROGRAM SHALL CONFIRM THE PILE DESIGN MEETS THE REQUIRED COMPRESSION AND TENSION CAPACITY. TESTING SHALL BE OBSERVED BY THE OWNER AND/OR THE OWNER'S REPRESENTATIVE.

CONFORMED SET

NO.	DESCRIPTION	DATE	BY
1	LEAN TO ADDITION	12.10.25	MNE
0	ISSUED FOR CONSTRUCTION	12.4.25	MNE

GEORGIA REGISTERED No. PEF003000 STRUCTURAL MATTHEW N. ELLIS ENGINEER

12.4.25
Pi-Tech, Inc. COA#PEF003000
COA Expiration: 6.30.2026

DRAWN BY: PEJ
CHECKED BY: MNE
DATE: 12.4.2025
SCALE: AS SHOWN

PI-TECH, INC.
115 FOREST HILL RD
MACON, GA 31210
478.743.5600
www.pi-techinc.com

FLOWERY BRANCH CHEM. BUILDING
FOR
ESG ENGINEERING
MACON, GA

SHEET NO. S1
SHEET 1 OF 2

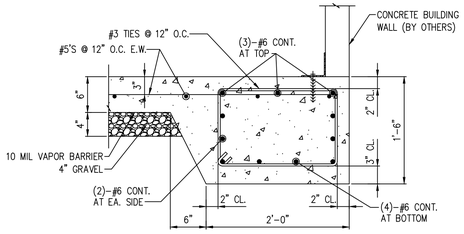

S2-A

NO SCALE

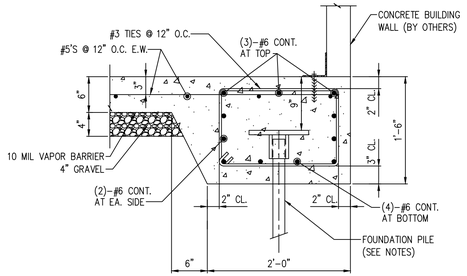

S2-B

NO SCALE

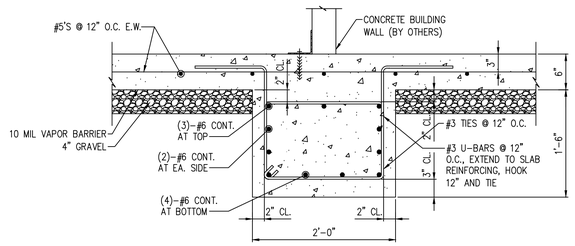

S2-C

NO SCALE

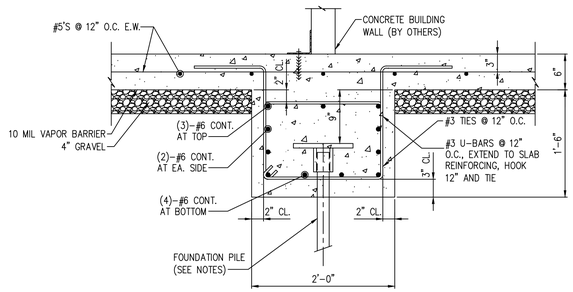

S2-D

NO SCALE

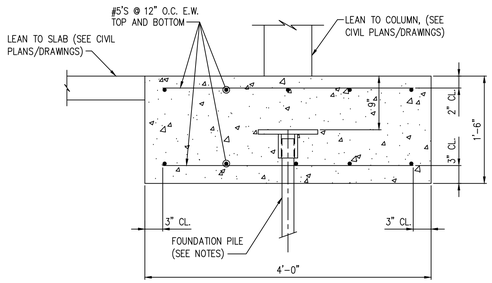

S2-E

NO SCALE

CONFORMED SET

NO.	DESCRIPTION	DATE	BY
1	LEAN TO ADDITION	12.10.25	MNE
0	ISSUED FOR CONSTRUCTION	12.4.25	MNE

GEORGIA REGISTERED No. SE000062 STRUCTURAL ENGINEER MATTHEW N. ELLIS

12.4.25
Pi-Tech, Inc. COA#PEF003000
COA Expiration: 6.30.2026

DRAWN BY: PEJ
CHECKED BY: MNE
DATE: 12.4.2025
SCALE: AS SHOWN

PI-TECH, INC.
115 FOREST HILL RD
MACON, GA 31210
478.743.5600
www.pi-techinc.com

FLOWERY BRANCH CHEM. BUILDING
FOR
ESG ENGINEERING
MACON, GA

SHEET NO. S2
SHEET 2 OF 2

MECHANICAL SPECIFICATIONS

1) Provide all heating, ventilation and air conditioning items indicated on the drawings, described in this specification or required for a complete and proper installation.

2) Comply with all pertinent codes, ordinances and regulations. Refer to website for Dept. of Community Affairs for current Codes Editions.

3) The contractor shall not attempt to precisely scale dimensions from these drawings to obtain construction dimensions and clearances. The contractor shall verify all actual dimensions and clearances. Although these plans are diagrammatic in nature, they shall be followed as closely as site conditions, new construction, and work by other trades shall permit. Deviations from these drawings, which are required to conform to the available space or the actual building construction, shall be made at no additional cost to the owner.

4) Furnish without extra charge, any additional material and labor required to comply with the above codes and standards, even though the work may not be described in the contract documents. Where the requirements of the contract documents exceed the requirements of the above codes and standards, the contract documents shall take precedence.

5) All equipment and material shall be new and of first quality. Equipment and material shall be the same or equal to the basis of design listed on these drawings and shall be UL listed.

6) Cooperate and coordinate with other trades in order that all systems in the work may be installed in the best arrangement.

7) Examine the areas and conditions under which work of this section will be installed. Correct conditions detrimental to the proper and timely completion of the work. Notify Architect of any discrepancies. Do not proceed until unsatisfactory conditions have been corrected.

8) Avoid interference with structure, and with work of other trades. Install all equipment per manufacturer's instructions. Install accessible parts, including equipment, coils, valves, dampers, controls, and filters with adequate clearance for inspection, adjustments, repair and replacement.

9) All other materials not specifically described but required for a complete and proper installation shall be as selected by the contractor subject to acceptance by the Engineer.

10) All ductwork shall be fabricated from galvanized sheet metal duct and conform to SMACNA "HVAC Duct Construction Standards–Metal and Flexible. Seal all joints in ductwork with mastic sealant.

11) Refrigerant piping shall conform to manufacturer's recommendations and installation instructions. Refrigerant piping shall be ASTM B280 Type ACR or ASTM B88 Type L drawn copper tubing with wrought copper fittings. Insulate suction line with ½" thick flexible foamed plastic cellular foam (Armaflex or equivalent). All piping shall be adequately supported. Insulation installed outdoors shall be painted with two coats of Armacell WB coating or equivalent. Refrigerant pipes shall be installed in accordance with ASHRAE standard 15–2022 section 9.12 and shall be tested in accordance with ASHRAE standard 15–2022 section 9.13. Contractor shall issue a letter to design team stating that refrigerant pipes has been installed and tested under the referenced sections. Contractor shall refer to ASHRAE standard 15–2022 sections 9.10 and 9.11 for additional information regarding refrigerant piping. Penetration of refrigerant pipes shall be protected with a through penetration protection means. The through penetration protection shall be the same or higher rating than the assembly.

12) Thermostats: Provide 24 volt, programmable 24–hour, 7–day thermostat to control heating stages in sequence with delay between stages and supply fan to maintain temperature setting. For Heat Pumps include system selection switch heat–off–cool and fan control switch (auto–on), emergency heat switch (auxiliary/emergency heat indicator lights).

13) Provide fire and smoke rated flexible connections between fans and ducts. Material shall comply with NFPA 90A requirements for material in supply air stream.

14) Install all equipment in accordance with manufacturer's instructions and recommendations including clearances recommended for proper operation or service. All filters and serviceable parts shall be readily accessible.

15) Do not cut into or reduce the size of any structural member without the permission of the Architect.

16) Provide weather–proof flashing at all duct and pipe penetrations through the building walls and roof. As a minimum, flashings shall be designed and installed in accordance with SMACNA standards. Flashings shall be guaranteed weatherproof.

17) Support all HVAC units, ductwork, piping and other appurtenances from structure, provide vibration isolation at all fans which are not internally isolated. Provide hanger rod with built in rubber–in–shear isolator. Between drain pan and unit provide 4 each rubber–in–shear isolator. Do not attach vibration isolator to drain pan. Do not screw or drive fasteners into non–structural components such as roof decks or non–load bearing walls.

18) Thoroughly clean all components and remove all dirt, scale, oil, and other foreign substances. Provide clean air filters for all equipment.

19) Perform all tests necessary to demonstrate the integrity of the complete installation to the approval of the Engineer and all other authorities having jurisdiction. Make all adjustments necessary and balance the completed system in accordance with the data shown. Balance the systems in accordance with NEBB or AABC standards. Acceptable tolerances shall be minus ten percent to plus five percent of all measurements. Balancing shall be done by an independent licensed (by NEBB or AABC) TAB contractor. Make the following tests and submit reports to the Architect:
   a) Airflow rate at each supply, return and exhaust outlet or inlet.
   b) Total airflow rate and total static pressure for each supply and exhaust fan. Test exhaust fans with room doors closed.
   c) Motor speed, for multiple speed fans (e.g. high, medium, low).
   d) For direct drive fans, provide speed settings and actual rpm, including ECM motor driven fans
   e) Provide fan and motor rpm for belt driven fans. Provide sheave sizes.
   f) Outside airflow rate to each HVAC unit and supply fan.
   g) Motor current (and compare with nameplate data) at all motors.
   h) Entering and leaving air dry–bulb and wet–bulb conditions at all cooling coils.
   i) Heat output capacity for unit heaters, heating devices and coils (kW or MBH).
   j) Manufacturer, model and serial number for each piece of HVAC equipment scheduled on drawings.
   k) Calibrate thermostats to be within one degree of actual temperature at thermostat.
   l) Verify that all HVAC devices operate as scheduled or indicated (i.e. ON–OFF, 2–stage, variable output (SCR heaters), etc.

20) The entire system shall be warranted for a period of one (1) year beginning with Owner's acceptance of the work. Compressors shall include a minimum of five (5) year parts only warranty from the manufacturer. All labor and materials necessary to repair or replace the system or portions thereof, during that time shall be warranted for a period of one (1) year from the repair of replacement.

21) Up Blast fan (direct drive): Side wall mounted exhaust fans shall be upblast centrifugal direct drive type. The fan wheel shall be centrifugal backward inclined, constructed of aluminum and shall include a wheel cone carefully matched to the inlet cone for precise running tolerances. Wheels shall be statically and dynamically balanced. The fan housing shall be constructed of heave gauge aluminum with a rigid internal support structure. Wind bands shall have a rolled bead for added strength and shall be joined to curb caps with a leak–proof, continuously welded seam. Motors shall be mounted out of the airstream on vibration isolators. Fresh air for motor cooling shall be drawn into the motor compartment from an area free of discharge contaminants. Motors shall be readily accessible for maintenance. A disconnect switch shall be factory installed and wired from the fan motor to a junction box within the motor compartment. A conduit chase shall be provided through the curb cap to the motor compartment for ease of electrical wiring. All fans shall bear the AMCA Certified Ratings Seal for sound and air performance. Each fan shall bear a permanently affixed manufacturer's nameplate containing the model number and individual serial number for future identification. Refer to schedule for further requirement.

22) Louvers: 4" deep, 12 gauge (0.081) etched and 30–minute clear anodized extruded aluminum, drainable blades and frame; back mounted 1/2" mesh 19–gauge screen; flange frame. Louver shall be rated for no water carry–through at 900 face velocity, 0.15" maximum pressure drop for 4–foot square sample tested according to AMCA Standard 500, 1973.

23) SUBMITTALS AND SUBMITTAL PROCEDURES:
   a. Contractor shall review the submittal data and check for the purpose of compliance with safety requirements, verification of dimensions, contract documents and methods and means prior to submitting to design professional. Contractor shall indicate approval by indicating such on the submittal.
   b. Transmit each submittal electronically in PDF format.
   c. Sequentially number submittal files and transmittal form. Revise submittals with original number and a sequential alphabetic suffix. File names shall describe item included in file.
   d. Identify Project, the Contractor, Subcontractor or supplier; pertinent drawing and detail number, and specification section number, as appropriate on each copy. Each file shall include an index of items included in file.
   e. Apply the Contractor's stamp, signed or initialed certifying that review, approval, verification of Products required, field dimensions, adjacent construction Work, and coordination of information is in accordance with the requirements of the Work and Contract Documents.
   f. Submittal data for all items in project shall be submitted at one time. Submittal shall be divided into groups with file sizes not exceeding 6 MB. If there is unavailable data such as control submittal, etc., these may be submitted later if not doing so would delay project progress. Data shall include capacities, complete installation instructions, dimensional data and electrical data, BHP, motor HP, operating weights and load distribution at mounting points.
   g. Deliver submittals electronically to the Design Professional.
   h. Schedule submittals to expedite the Project, and coordinate submission of related items.
   i. For each submittal for review, allow 15 days excluding delivery time to and from the Contractor.
   j. Identify variations from Contract Documents and Product or system limitations that may be detrimental to successful performance of the completed Work.
   k. Provide space for the Contractor and the Architect/ review stamps.
   l. When revised for resubmission, identify all changes made since previous submission.
   m. Distribute copies of reviewed submittals as appropriate. Instruct parties to promptly report any inability to comply with requirements.
   n. Submittals not requested will not be recognized or processed.
   o. Provide files containing only related items (such as piping, equipment, air distribution, etc.)

24) Instruct Owner's representative in the operation of the systems, using the operation and maintenance manual as a teaching aid.

25) Provide an operation and maintenance manual. As a minimum, the manual shall contain:
   a. A complete list of all equipment and appurtenances with equipment designations (per Drawings), manufacturers, and catalog numbers.
   b. Copies of manufacturers' brochures and instructions for operation and maintenance of all mechanical equipment, including replacement parts lists.
   c. Typed system operation and maintenance instructions, including inspection, lubrication, and service instructions and schedules.
   d. List of names, addresses and phone numbers of distributors of all equipment and appurtenances.
   e. Manufacturers' warranties.

26) Indoor, direct–expansion, wall–mounted fan coil unit (ACU). Unit shall be complete with cooling/heating coil, fan, fan motor, piping connectors, electrical controls, microprocessor control system, and integral temperature sensing. Unit shall be furnished with integral wall mounting bracket and mounting hardware. Cabinet discharge and inlet grilles shall be attractively styled, high–impact polystyrene. Cabinet shall be fully insulated for improved thermal and acoustic performance. Fan shall be tangential direct–drive blower type with air intake at the top of the unit and discharge at the bottom front. Automatic, motor–driven vertical air sweep shall be provided standard. Air sweep operation shall be user selectable. The vertical sweep may be adjusted (using the remote control) and the horizontal air direction may be set manually. Coil shall be copper tube with aluminum fins and galvanized steel tube sheets. Fins shall be bonded to the tubes by mechanical expansion and golden hydrophilic pre–coated. A drip pan under the coil shall have a drain connection for hose attachment to remove condensate. Condensate pan shall have internal trap. Motors shall be open drip–proof, permanently lubricated ball bearing with inherent overload protection. Fan motors shall be 4–speed. Controls shall consist of a microprocessor–based control system which shall control space temperature, determine optimum fan speed, and run self–diagnostics. The temperature control range shall be from 62F to 86F (17C to 30C) in increments of 1F or 1C, and have 46F Heating Mode (Heating Setback). The wireless or wired remote controller shall have the ability to act as the temperature sensing location for room comfort. Refer to schedule for preference on wired or wireless thermostat. The unit shall have the following functions as a minimum: An automatic restart after power failure at the same operating conditions as at failure. A timer functions to provide a minimum 24–hour timer cycle for system Auto Start/Stop. Temperature–sensing controls shall sense return air temperature. Indoor coil freeze protection. Wireless infrared remote control and/or wired remote control as scheduled to enter set points and operating conditions. Automatic air sweep control to provide on or off activation of air sweep louvers. Dehumidification mode shall provide increased latent removal capability by modulating system operation and set point temperature. Fan–only operation to provide room air circulation when no cooling is required. Diagnostics shall provide continuous checks of unit operation and warn of possible malfunctions. Error messages shall be displayed at the unit. Fan speed control shall be user–selectable: high, medium, low, or microprocessor controlled automatic operation during all operating modes. Automatic heating–to–cooling changeover in heat pump mode. Control shall include deadband to prevent rapid mode cycling between heating and cooling. Indoor coil high temperature protection shall be provided to detect excessive indoor discharge temperature when unit is in heat pump mode. Unit shall have filter track with factory–supplied cleanable filters. Indoor fan motor to operate on 115V on model size 12 and on 208–230V on model sizes 09–36, as specified. Power is supplied from the outdoor unit. All units should have refrigerant lines that can be oriented to connect from the left, right or back of unit. Both refrigerant lines need to be insulated. The condensate pump shall remove condensate from the drain pan when gravity drainage cannot be used. Pump shall be designed for quiet operation. Pump shall consist of two parts: an internal reservoir/sensor assembly, and a remote sound–shielded pump assembly. A liquid level sensor in the reservoir shall stop cooling operation if the liquid level in the reservoir is unacceptable. Refer to schedule for providing condensate pump. Only provide condensate pump were indicated on schedule.

27) Small Split Condensing unit: Casing (HPU): House components in welded steel frame with galvanized steel panels with weather resistant, baked enamel finish. Mount contactors and controls in weatherproof panel provided with full opening access doors. Provide removable access doors or panels with quick fasteners. Compressor: Hermetically sealed, 3600 rpm maximum, resiliently mounted with positive lubrication and internal motor protection. Compressor: Hermetic reciprocating type or Hermetic scroll type. Condenser Coils: Aluminum fins mechanically bonded to seamless copper tubing or all aluminum fins and tube. Air test under water to 425 psig, and vacuum dehydrate. Seal with holding charge of refrigerant. Coil Guard: Louvered or PVC coat steel wire. Fans and motors: Direct driven propeller type condenser fans with fan guard on discharge. Weatherproof motors suitable for outdoor use, single phase permanent split capacitor with permanent lubricated ball bearings and built in thermal overload protection. Fan Guard: PVC coat steel wire. Refrigerant circuit: For each refrigerant circuit, provide: Filter dryer liquid line. Suction accumulator. Suction and liquid line service valves and gage ports. Charging valve. Condenser pressure relief mechanism. Factory wired with single point power connection. Factory wired controls shall include contactor, high– and low–pressure cutouts, internal winding thermostat for compressor, control circuit transformer, non–cycling reset relay. Provide a surge capacitor and lightning arrestor in unit cabinet for protection from power surges due to lightning and switching transients. Provide controls to permit operation down to 0 degrees F ambient temperature were scheduled to include: Crankcase heater with thermostat. Head pressure switch to cycle fan motors in response to refrigerant condensing pressure. Solid state control to vary speed of one condenser fan motor in response to refrigerant condensing pressure. Refer to Schedule on Drawings for additional specifications.

28) Corrosion Resistance Coating (ACU–1 & 2): Evaporator coil serving the fluoride and sodium hypochlorite chemical room shall be factory–coated or field–coated with a corrosion–resistant HVAC coil coating (Heresite P–413, Blygold PolurAl XT, or equal). Coil shall be cleaned, dried, and protected prior to coating. Apply two thin, even coats to all exposed coil surfaces, copper tubing, headers, and U–bends. Coating shall be compatible with chlorine and fluoride vapors and rated for severe chemical environments. Refrigerant piping associated with this system shall be fully coated for corrosion protection and installed within a concealed guard or protective enclosure to prevent chemical exposure and mechanical damage. Contractor shall protect all electrical components during coating and restore system operation after curing.

29) Basic motor requirements: basic requirements apply to mechanical equipment motors, unless otherwise indicated. Motors 1/2 hp and larger: Polyphase, unless otherwise scheduled. Motors smaller than 1/2 hp: single phase. Frequency rating: 60 Hz. Service factor: according to NEMA MG 1, general purpose continuous duty, design type "B." Enclosure: open drip–proof, unless otherwise indicated. Efficiency: motors shall have a higher efficiency rating than industry standard average motor as delineated in IEEE Standard 112, test method 13. Thermal protection: where indicated or required, internal protection automatically opens power supply circuit to motor when winding temperature exceeds a safe value calibrated to temperature rating of motor insulation. Thermal protection device automatically resets when motor temperature returns to normal range, unless otherwise indicated.

30) Hangers and supports: Building attachments: concrete inserts or structural–steel fasteners appropriate for building materials, and beam clamps. Hanger materials: galvanized, sheet steel or round, threaded steel rod. Hangers installed in corrosive atmospheres: electrogalvanized, all–thread rod or galvanized rods with threads painted after installation. Straps and rod sizes: comply with SMACNA's "HVAC Duct Construction Standards––Metal and Flexible" for sheet steel width and thickness and for steel rod diameters. Duct attachments: sheet metal screws, blind rivets, or self–tapping metal screws; compatible with duct materials. Trapeze and riser support galvanized steel shapes and plates: steel shapes complying with ASTM A 36/A 36M.

31) Sealant materials: joint and seam sealants, general: the term "sealant" is not limited to materials of adhesive or mastic nature but includes tapes and combinations of open–weave fabric strips and mastics. Joint and seam tape: 2 inches wide; glass–fiber fabric reinforced. Joint and seam sealant: one–part, nonsag, solvent–release–curing, polymerized butyl sealant, formulated with a minimum of 75 percent solids. Flanged joint mastics: one–part, acid–curing, silicone, elastomeric joint sealants, complying with ASTM C 920, type S, grade NS, class 25, use O.

32) All HVAC equipment such as AH, CU, EF, AC, HP, and RTU shall have visible nameplates with their associated marks on them.

33) Acceptable Manufacturers are:

Small Split Units:	Mitsubishi, Daikin, Hitachi, Toshiba
Grilles, Registers & Diffusers:	Titus, Nailor, Price, Tuttle & Bailey, Kruger, Metal Aire (Color selection submitted to Architect)
Fans:	Twin–City, Cook, Greenheck, Penn Barry, Acme, American Cool Air, Captive Air, Solar & Palau
Louvers/Dampers/Fire Dampers:	United Enertech, Greenheck, Ruskin, Arrow United, Lloyd Industries, Air Balance (Color selection submitted to Architect)
Controls–provided with unit:	Provide thermostats by same manufacturer as equipment

TOTAL ENGINEERS
169 New Street, Macon, GA 31201
(478)741–4632 - T.E. project # 25–101
www.totalengineers.com
GA COA NO # PEF009195 EXP: 06/30/2026

ESG ENGINEERING

GROUNDWATER WELLS #4 & #5
FOR THE
CITY OF FLOWERY BRANCH

REVISIONS

NO.	DESCRIPTION	DATE
2	ADDENDUM 2	

CONFORMED SET

GEORGIA REGISTERED PROFESSIONAL ENGINEER
No. PE009664
KRUNAL M PATEL

DRAWN BY: KMP
CHECKED BY: KMP
DATE:
SCALE:

CONTENT:
MECHANICAL SPECIFICATIONS

SHEET NO:
M0.1

Last Saved By: Owner Plotted: 12/11/2025 10:58 AM
Drawing Path: Z:\2025\101 Well Project Chem Feed Building Flowery Branch, GA\DRAWINGS\TE25-101 HVAC.dwg

FAN SCHEDULE

MARK	CFM	EXT. SP IN W.G.	DRIVE TYPE	MOTOR HP/W	MAX. FAN (RPM)	MAX TIP SPEED FPM	POWER/ PHASE	LAY-OUT BASIS: GREENHECK	NOTES
EF-1	350	0.20	DIRECT	1/10 HP	1425	4055	115/1	CUE-080-VG	1; 2; 3; 4; 5
EF-2	350	0.20	DIRECT	1/10 HP	1425	4055	115/1	CUE-080-VG	1; 2; 3; 4; 5
EF-3	600	0.20	DIRECT	1/10 HP	1590	4525	115/1	CUE-090-VG	1; 2; 3; 4; 5

1. VERIFY ELECTRIC POWER REQUIREMENTS WITH ELECTRICAL PLANS, WHICH TAKE PRECEDENCE OVER THIS INFORMATION. BOTTOM OF FAN AT 8' AFF. COORDINATE EXACT ELEVATION WITH ARCHITECT.
2. CENTRIFUGAL WALL MOUNT FAN. PROVIDE WALL MOUNTING BRACKET, GRAVITY SHUTTER WITH BUG SCREEN, EC MOTOR, AND SPEED CONTROLLER. ALL PARTS SHALL BE INTERNALLY AND EXTERNALLY COATED(INCLUDING WHEEL AND ALL SURFACES IN AIR STREAM)
3. PROVIDE ALL INTERNALLY AND EXTERNALLY COATED(INCLUDING WHEEL AND ALL SURFACES IN AIR STREAM) SUITABLE FOR SEVERELY CORROSIVE ATMOSPHERES(POTASSIUM PERMANGANATE & SODA ASH). COATING SHALL BE FACTORY APPLIED HI-PRO POLYESTER COATING.
4. POLYSTER COATING SHALL BE GREENHECK HI-PRO POLYSTER OR EQUAL. PROVIDE MANUFACTURER'S WALL GRILL.
5. FAN SHALL BE CONTROLLED BY WALL SWITCH TO ENERGIZE THE FAN PRIOR TO ENTERING ROOM. WALL SWITCH SHALL BE PROVIDED BY ELECTRICAL.

LOUVER SCHEDULE

MARK	SIZE W X H (INCHES)	MIN. FREE AREA (SQ. FT.)	MAXIMUM PRESS. DROP (IN. W.G.)	FINISH (COLOR BY ARCHITECT)	MOTOR OPERATOR	INTERLOCK TO OPEN WITH	LAY-OUT BASIS: GREENHECK	NOTES
L-1	18"X18"	0.73	0.08	ENAMEL	YES	EF-1	GREENHECK ECD-401	1; 2
L-2	18"X18"	0.73	0.08	ENAMEL	YES	EF-2	GREENHECK ECD-401	1; 3
L-3	24"X18"	1.02	0.08	ENAMEL	YES	EF-3	GREENHECK ECD-401	1; 3

1. STATIONARY EXTRUDED ALUMINUM LOUVER. PROVIDE CORROSION RESISTANCE KYNER FINISH. PROVIDE BIRD AND INSECT SCREEN. COORDINATE COLOR WITH ARCHITECT (PROVIDE COLOR SAMPLES WITH SUBMITTAL).
2. BOTTOM OF LOUVER AT 24-INCHES AFF.

MINI SPLIT & COOLING ONLY FAN COIL SYSTEM SCHEDULE

OUTDOOR UNIT MARK	INDOOR UNIT MARK	MIN COOLING MBH	MIN HEATING MBH	SUPPLY AIR CFM HI-LO	POWER VAC/PH	CARRIER MODEL #		NOTES
						OUTDOOR	INDOOR	
HPU-1	ACU-1	18.0	18.0	380-840	208/1	37MARAQ18AA3	45MAHAQ18XA3	1; 2; 3; 4; 5; 6; 7; 8
HPU-2	ACU-2	18.0	18.0	380-840	208/1	37MARAQ18AA3	45MAHAQ18XA3	1; 2; 3; 4; 5; 6; 7; 8
HPU-3	ACU-3	36.0	36.0	380-840	208/1	37MARAQ36AA3	45MAHAQ36XA3	1; 2; 3; 4; 5; 6; 7

1. VERIFY ELECTRICAL POWER REQUIREMENTS WITH ELECTRICAL PLANS WHICH TAKES PRECEDENCE OVER THIS INFORMATION.
2. MINI SPLIT SYSTEM MOUNTED ON WALL (SEE PLANS). PROVIDE MANUFACTURER'S WIERED THERMOSTAT
3. ROUTE CONDENSATE TO OUTSIDE. REFER TO DRAWING FOR FURTHER INFORMATION. PROVIDE RECTOR SEAL COIL MOUNTED(CLIPPED TO COIL) SATE-T-SWITCH SS610E.
4. WIRE SWITCH TO SHUT UNIT DOWN IN CASE OF CONDENSATE OVERFLOW. PROVIDE SELF CLEANING IONIZATION SYSTEM FOR UNIT. REFER TO SCHEDULE FOR FURTHER INFORMATION.
5. PROVIDE DISCONNECT AND ELECTRICAL CONNTECTION TO OUTDOOR UNIT PER MANUFACTURER'S INSTRUCTIONS.
6. COOLING RANGE SHALL BE BETWEEN -22 F TO 122F. HEATING RANGE SHALL BE -22F TO 86F.
7. PROVIDE CONDENSATE PUMP LOCATED WITHIN ACU CABINET TO PUMP CONDENSATE TO DRAIN OUTSIDE WHERE REQUIRED. OMIT PUMP WHERE GRAVITY DRAIN IS POSSIBLE.
8. PROVIDE CORROSION RESISTANCE COATING FOR THE UNIT AND ITS ACCESSORIES. REFER TO SPECIFICATIONS FOR FURTHER INFORMATION.

SELF-CLEANING IONIZATION SYSTEM SCHEDULE

AIRFLOW CAPACITY MIN-MAX CFM	BASIS OF DESIGN GLOBAL PLASMA SOLUTIONS	NOTES
0-1200	GPS-FC	1; 2; 3; 4; 5

1. ONE SELF CLEANING IONIZATION SYSTEM SHALL BE INSTALLED PER SYSTEM.
2. ONE SELF CLEANING IONIZATION SYSTEM SHALL BE INSTALLED PER DUCTLESS MINI SPLIT UNIT.
3. SYSTEM SHALL BE USE FOR DUCTLESS MINI SPLITS.
4. SYSTEM SHALL BE EQUIPPED WITH CARBON FIBER BRUSHES AND LED OPERATION STATUS.
5. INTERLOCK IONIZATION SYSTEM TO RUN WITH EVAPORATOR FAN.

MECHANICAL SYMBOLS & ABBREVIATIONS LEGEND

	NEW PIPE, DUCTWORK OR EQUIPMENT
24x12 24x12	DUCT SIZE: FIRST DIMENSION IS SIDE DRAWN
	FLEXIBLE ROUND DUCTWORK
F SCD SD	FIRE DAMPER, SMOKE DAMPER, SMOKE DETECTOR
	CEILING SUPPLY DIFFUSER
	CEILING RETURN OR EXHAUST AIR
	S.A DUCT OUT OF TU BOX WITH DUCT LINER FOR THR FIRST FIVE FEET OF DUCT OUT OF TU BOX
	SIDEWALL REGISTER OR GRILLE
	CHANGE IN PIPE OR DUCT SIZE OR SHAPE
R	REFRIGERANT PIPING
D	CONDENSATE OR OTHER DRAIN PIPING
	ELBOW TURNED DOWN OR TURNED UP IN PIPING
T	THERMOSTAT, ARROW SHOWS CONTROL WIRING PATH
TC	TIME CLOCK
ø	DIAMETER
U.C.	UNDER-CUT DOOR 3/4", UNLESS OTHER SIZE NOTED
20 24	INDICATES EQUIPMENT ON PLANS; TOP ITEM SHOWS TYPE OF EQUIPMENT AND BOTTOM ITEM SHOWS SPECIFIC MARK NUMBER
4 S1 8"ø 300	ITEM IN HEXAGON SHOWS AIR DEVICE MARK NUMBER, ITEM ABOVE LINE SHOWS NECK SIZE, ITEM BELOW LINE SHOWS AIR FLOW THROUGH DEVICE, AND NUMBER IN FRONT SHOWS QUANTITY IF MORE THAN ONE
AFF	ABOVE FINISHED FLOOR
AH	AIR HANDLING UNIT
BTUH, MBH	BRITISH THERMAL UNITS, THOUSAND BRITISH THERMAL UNITS
CAP	CAPACITY
CFM	CUBIC FEET PER MINUTE
CLG	CEILING
CU	CONDENSING UNIT
DB, WB	DRY BULB TEMPERATURE, WET BULB TEMPERATURE
EA, EG	EXHAUST AIR, EXHAUST GRILLE
EF	EXHAUST FAN
EXT SP	EXTERNAL STATIC PRESSURE (USUALLY EXPRESSED IN INCHES OF WATER IN GAGE)
HP	HEAT PUMP UNIT
MVD, VD	MANUAL VOLUME DAMPER
OA	OUTSIDE AIR
RA, RG	RETURN AIR, RETURN GRILLE
SA	SUPPLY AIR
VAC, PH	VOLTS ALTERNATING CURRENT, NUMBER OF PHASES
W, KW	WATTS, KILOWATTS
UH	UNIT HEATER

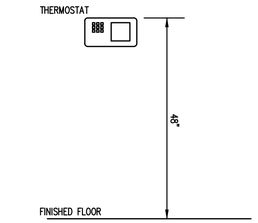

1 T-STAT DETAIL
SCALE: N.T.S.

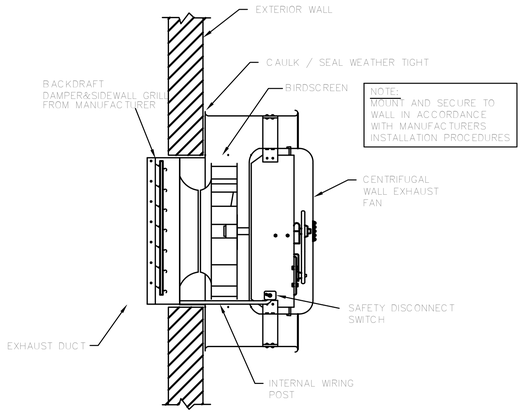

2 SIDEWALL CENTRIFUGAL EXHAUST FAN MOUNTING-DETAIL
SCALE: NTS

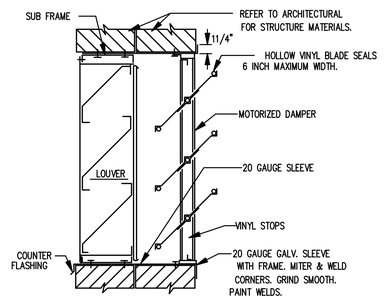

3 WALL MOUNTED LOUVER WITH DAMPER IN MASONRY WALL
SCALE: N.T.S.

TOTAL ENGINEERS
169 New Street, Macon, GA 31201
(478)741-4632 - T.E. project # 25-101
www.totalengineers.com
GA COA NO # PEF009195 EXP: 06/30/2026

ESG ENGINEERING

GROUNDWATER WELLS #4 & #5

FOR THE
CITY OF FLOWERY BRANCH

REVISIONS

NO.	DESCRIPTION	DATE
2	ADDENDUM 2	

CONFORMED SET

GEORGIA REGISTERED PROFESSIONAL ENGINEER KRUNAL M PATEL

DRAWN BY: KMP
CHECKED BY: KMP
DATE:
SCALE:

CONTENT:
MECHANICAL SCHEDULES

SHEET NO:
M0.2

Last Saved By: Owner
Plotted: 12/11/2025 10:58 AM
Drawing Path: Z:\2025\101 Well Project Chem Feed Building Flowery Branch, GA\DRAWINGS\TE\25-101 HVAC.dwg

KEY NOTES(THIS SHEET ONLY):

(1) ROUTE CONDENSATE DRAIN TO OUTSIDE 12-INCHES AFF. PROVIDE 45-DEGREE ELBOW AT END OF PIPE TO GUIDE CONDENSATE AWAY FROM EXTERIOR WALL. PROVIDE SPLASH BLOCK AT DISCHARGE.

(2) ROUTE CONDENSATE TO MOP SINK.

(3) LOUVER SHALL BE 4-INCH DEEP AT MAXIMUM.

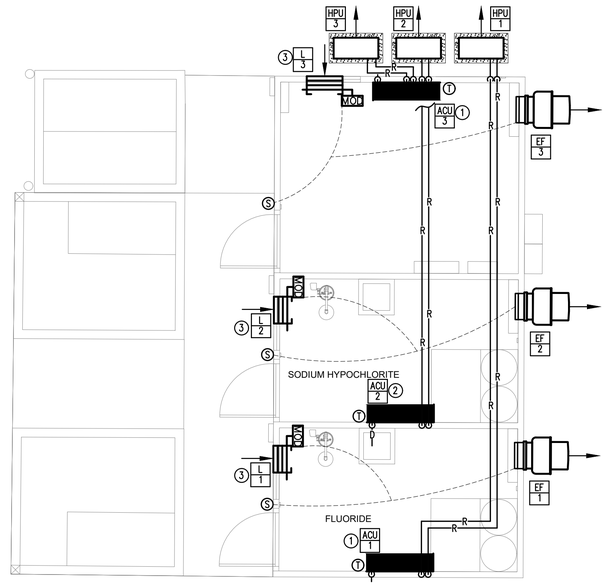

1 MECHANICAL PLAN
SCALE: 1/4"=1'-0"

TOTAL ENGINEERS
169 New Street, Macon, GA 31201
(478)741-4632 - T.E. project # 25-101
www.totalengineers.com
GA COA NO # PEF009195 EXP: 06/30/2026

ESG ENGINEERING

GROUNDWATER WELLS #4 & #5
FOR THE
CITY OF FLOWERY BRANCH

REVISIONS

NO.	DESCRIPTION	DATE
2	ADDENDUM 2	

CONFORMED SET

GEORGIA REGISTERED PROFESSIONAL ENGINEER
KRUNAL M PATEL

DRAWN BY: KMP
CHECKED BY: KMP
DATE:
SCALE:

CONTENT:

MECHANICAL PLAN

SHEET NO:

M1.0

Last Saved By: Owner
Plotted: 12/11/2025 10:58 AM
Drawing Path: Z:\2025\101 Well Project Chem Feed Building Flowery Branch, GA\DRAWINGS\TE\25-101 HVAC.dwg

LEGEND

	LIGHTING AND POWER
	CONDUIT RUN CONCEALED ABOVE CEILING OR IN WALL CONTAINING 3 NUMBER 12 CONDUCTORS UNLESS SHOWN OTHERWISE. HASH MARKS, IF SHOWN, INDICATE QUANTITY OF NUMBER 12 CONDUCTORS. WHERE DRAWING SPACE PROHIBITS HASH MARKS BEING SHOWN REFER TO CIRCUIT NUMBERS AND PROVIDE REQUIRED NUMBER OF CONDUCTORS PER CIRCUIT TYPE.
	CONDUIT RUN CONCEALED IN OR BELOW FLOOR SLAB, OR UNDERGROUND.
A-2,4,6	HOMERUN TO PANELBOARD, LETTER OR LETTERS INDICATE PANELBOARDS, NUMBERS INDICATE CIRCUIT NUMBERS.
	L.E.D. FIXTURE, SURFACE OR STEM MOUNTED.
	L.E.D. LIGHTING FIXTURE, SURFACE WALL BRACKET MOUNTED. MOUNTING HEIGHT AS NOTED.
J	JUNCTION BOX LOCATED ABOVE CEILING OR BELOW GRADE.
	DUPLEX CONVENIENCE OUTLET MOUNTED ABOVE COUNTER, AT +48" TO CENTERLINE OF OUTLET.
	DUPLEX CONVENIENCE OUTLET, GFI TYPE. +18" TO CENTER LINE UNLESS OTHERWISE NOTED. "WP" WHERE SHOWN INDICATES WEATHER-RESISTENT DEVICE WITH METAL IN-USE WEATHERPROOF COVER.
	DUPLEX CONVENIENCE OUTLET, GFI TYPE. MOUNTED ABOVE COUNTER AT +46" TO CENTERLINE OF RECEPTACLE UNLESS NOTED OTHERWISE, "WP" WHERE SHOWN INDICATES WEATHER-RESISTENT DEVICE WITH METAL IN-USE WEATHERPROOF COVER.
	SINGLE POLE TOGGLE SWITCH, +46" TO CENTER LINE MOUNTING HEIGHT.
	PANELBOARD, SEE SCHEDULE.
	DISCONNECT SWITCH, SIZE AS NOTED ON DRAWINGS. FUSED PER MANUFACTURER'S NAME PLATE DATA OF EQUIPMENT SERVED.
GA	GENERATOR REMOTE ANNUNCIATOR. FLUSH RECESSED MOUNTED.

GENERAL NOTES:

1. DO NOT SCALE DRAWINGS TO LOCATE EQUIPMENT OR OUTLETS.
2. MOUNTING HEIGHTS AS INDICATED ON THE DRAWINGS SHALL BE FROM THE FINISHED FLOOR TO THE CENTER LINE OF THE OUTLET BOX.
3. THE ELECTRICAL DRAWINGS ARE ONLY A PART OF THE CONTRACT DOCUMENTS. ALL OF THE DRAWINGS AND SPECIFICATIONS MUST BE REVIEWED FOR THEIR INTERRELATIONSHIP AND REQUIRED COORDINATION BETWEEN DISCIPLINES.
4. ALL CONDUIT ROUTED FROM DISCONNECT TO EXTERIOR HVAC UNITS SHALL BE ROUTED UNDERGROUND. TURN UP ADJACENT TO UNIT AND MAKE TRANSITION TO SEALTITE TO SERVE UNIT. CONDUIT SHALL BE. ROUTED CONCEALED IN WALL.
5. ALL FLUSH RECESSED OUTLET BOXES SHALL BE INSTALLED SUCH THAT FRONT EDGE OF BOX WILL NOT BE SET BACK OF THE FINISHED SURFACE MORE THAN 1/4" IN ORDER TO COMPLY WITH N.E.C. 314-20. SUPPORT OF OUTLET BOX BY RECEPTACLE AND COVERPLATE IS NOT ACCEPTABLE.
6. ALL CONDUIT, OUTLET BOXES, AND LOW VOLTAGE CABLING SHALL BE APPROPRIATELY SUPPORTED THROUGHOUT THE PROJECT. SUPPORT OF THESE ITEMS BY CEILING GRID OR GRID SUPPORT WIRES IS NOT ACCEPTABLE.
7. ALL RECEPTACLES LOCATED WITHIN 6'-0"TO THE EDGE SINK OR OTHER WATER SOURCE SHALL BE GFCI TYPE DEVICE IN ACCORDANCE WITH N.E.C 210-8.A.7. COORDINATE LOCATIONS WITH ARCHITECTURAL AND PLUMBING DRAWINGS PRIOR TO ROUGH-IN.
8. COORDINATE EXACT LOCATION OF ALL MECHANICAL AND PLUMBING EQUIPMENT WITH DIVISION 23 PRIOR TO ROUGH IN. ADJUST LOCATION OF DISCONNECTING MEANS AND BRANCH CIRCUITRY AS REQUIRED.
9. ALL UNISTRUT MATERIAL SHALL BE MADE OF GRADE 304 OR 316 STAINLESS STEEL.
10. ALL FASTENERS USED IN THE CONSTRUCTION OF CHEMICAL FEED SYSTEM SHALL BE 304 OR 316 STAINLESS STEEL (INSTALLED WITH ANTI-GALLING COMPOUND ON FASTENERS 5/6 OR 8MM AND LARGER).
11. ALL FIELD DEVICES WITH A VISIBLE DISPLAY SHALL BE MOUNTED IN A NEMA 4X LOCKABLE ENCLOSURE.
12. ALL FIELD ENCLOSURES AND JUNCTION BOXES SHALL BE SEALED WITH GROMMET TYPE REUSABLE SEALS.
13. ALL EXTERIOR JUNCTION BOXES SHALL BE NEMA 4X RATED.
14. ALL EXTERIOR ELECTRICAL PANELBOARDS, TRANSFORMERS, DISCONNECTS, RECEPTACLES, AND SWITCHES SHALL BE NEMA 4X RATED.
15. CONTRACTOR SHALL PROVIDE CONDUIT AND BACKBOXES FOR ALL DEVICES AND WIRING. COORDINATE ALL CONTROL CABLING CONNECTIONS AND REQUIREMENTS WITH CONTROLS INSTALLER PRIOR TO ROUGH IN.
16. ALL EXPOSED EXTERIOR CONDUIT, RACEWAYS, AND SUPPORTS MEMBERS SHALL BE ALUMINUM.
17. COORDINATE EXACT LOCATION OF ALL DEVICES THAT REQUIRE CONTROL CABLING WITH MANUFACTURER PRIOR TO INSTALLATION.
18. ENSURE CONDUIT CONNECTIONS TO JUNCTION BOXES ARE MADE IN SUCH A WAY AS TO MAINTAIN THE 4X RATING OF THE JUNCTION BOX.
19. CONTRACTOR SHALL REFER TO DETAIL SHEETS FOR ALL MOUNTING REQUIREMENTS FOR ALL DEVICES AND EQUIPMENT. ALL EQUIPMENT LOCATED OUTDOORS SHALL BE PROVIDED WITH STAINLESS STEEL RACK AND ALL OTHER REQUIRED MOUNTING HARDWARE AS OUTLINED IN DETAILS AS REQUIRED FOR MOUNTING OF EQUIPMENT AND DEVICES.

LIGHTING FIXTURE SCHEDULE

TYPE	DESCRIPTION	WATTS	LUMENS	COLOR TEMP	MANUFACTURERS	NOTES
A	LED 4' STRIP LIGHT FIXTURE SURFACE MOUNTED WITH RIBBED FROSTED ACRYLIC ENCLOSED AND GASKETED LENS, NEMA 4X HOUSING AND WHITE FINISH.	34 W	3900	4000 K	COLUMBIA "LXEM" SERIES OR EQUAL	
B	L.E.D. WALL MOUNTED FIXTURE, DIE-CAST WALL PACK, GLASS REFRACTOR. TYPE III DISTRIBUTION.	30 W	4370	4000 K	HUBBELL"WGH2" SERIES OR EQUAL	
C	LED SURFACED MOUNTED FLOOD LIGHT WITH TWO DIE-CAST ALUMINUM HEADS, TEMPER GLASS LENSES, AND WHITE FINISH.	27 W	2100	4000 K	HUBBELL "MARSHAL" SERIES OR EQUAL	

GENERAL NOTES:

A. ALL LUMENS LISTED ARE DELIVERED LUMENS. ALL EQUALS TO SPECIFIED SHALL NOT BE ANY LOWER THAN 5% OF SPECIFIED LUMENS NOR WATTAGE BE HIGHER THAN 15% OF SPECIFIED WATTAGE.

B. LISTING OF MANUFACTURERS DOES NOT EQUAL AUTOMATIC APPROVAL. ALL CHARACTERISTICS NOTED IN DESCRIPTION SECTION MUST BE MET IN ORDER TO BE APPROVED. WHERE VENDOR / REP DOES NOT HAVE ONE OF MANUFACTURERS LISTED, PRIOR APPROVAL IS REQUIRED TO BE SUBMITTED TO ENGINEER TEN (10) DAYS PRIOR TO BID.

C. ALL FIXTURE VOLTAGES SHALL BE MULTIVOLT TYPE UNLESS OTHERWISE NOTED.

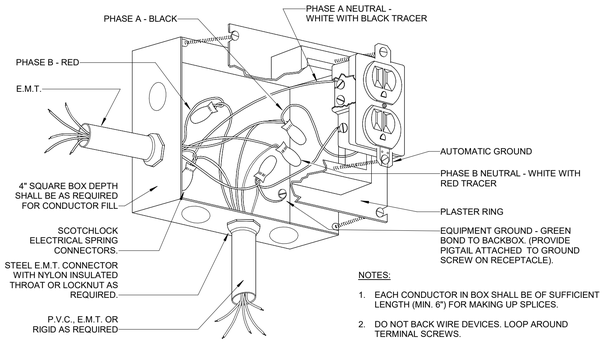

NOTES:

1. EACH CONDUCTOR IN BOX SHALL BE OF SUFFICIENT LENGTH (MIN. 6") FOR MAKING UP SPLICES.
2. DO NOT BACK WIRE DEVICES. LOOP AROUND TERMINAL SCREWS.
3. FACE OF PLASTER RING SHALL BE FLUSH WITH WALL.

1 / E1.0 DETAIL - RECEPTACLE CONNECTION
NO SCALE

PANELBOARD: MDP

LOCATION:
MOUNTING: SURFACE NEMA 1
MAIN DEVICE: 225.0 A MAIN CB
BUS AMPS: 225 AMPS
VOLTAGE: 480Y/277 V. 3 ø 4 W.
A.I.C. RATING: 42,000 AMPS SYMMETRICAL
SPECIAL:
FED FROM: ATS-MDP

LOAD NAME	NOTE	BKR	P	CKT	A	B	C	CKT	P	BKR	NOTE	LOAD NAME
SPARE		20 A	1	1	0.0 0.5			2	1	20 A		LIGHTING
SPARE		20 A	1	3	0.0 0.0			4	1	20 A		SPARE
SPARE		20 A	1	5		0.0 0.0		6	1	20 A		SPARE
SPARE		20 A	1	7	0.0 0.0			8	1	20 A		SPARE
SPARE		20 A	1	9	0.0 0.0			10	1	20 A		SPARE
SPARE		20 A	1	11		0.0 0.0		12	1	20 A		SPARE
TRANSFORMER T-LA		30 A	3	13	5.4 0.0			14				
				15	6.1 0.0			16	3	50 A		SPARE
				17		6.2 0.0		18				
WW CONTROL PANEL		30 A	3	19	3.0 9.5			20				
				21	3.0 9.5			22	3	50 A		HW CONTROL PANEL
				23		3.0 9.5		24				
IWH-1		125 A	3	25	22.5 0.0			26				
				27	22.5 0.0			28	3	40 A		SPD
				29		22.5 0.0		30				
		TOTAL LOAD:			40 kVA	40 kVA	40 kVA					
		TOTAL AMPS:			144 A	145.9 A	146 A					

LOAD CLASSIFICATION	CONNECTED	DEMAND	ESTIMATED	PANEL TOTALS	
HVAC	41779 VA	100.00%	41779 VA		
RECEPTACLES	4320 VA	100.00%	4320 VA	CONNECTED LOAD:	120750 VA
MTR	77174 VA	121.96%	94118 VA	ESTIMATED DEMAND:	137575 VA
LITES	474 VA	125.00%	592 VA	CONNECTED CURRENT:	145.2 A
				EST. DEMAND CURRENT:	165.5 A

NOTES:

PANELBOARD: LA

LOCATION:
MOUNTING: SURFACE NEMA 1
MAIN DEVICE: 100.0 A MAIN CB
BUS AMPS: 100 AMPS
VOLTAGE: 208Y/120 V. 3 ø 4 W.
A.I.C. RATING: 10,000 AMPS SYMMETRICAL
SPECIAL:
FED FROM: T-LA

LOAD NAME	NOTE	BKR	P	CKT	A	B	C	CKT	P	BKR	NOTE	LOAD NAME
SCADA PANEL		20 A	1	1	0.0 1.7			2	2	25 A		HPU/ACU-1
RECEPTACLES		20 A	1	3		0.5 1.7		4				
SH-(1-4)		20 A	1	5			0.8 1.7	6	2	25 A		HPU/ACU-2
EF-(1-3)		15 A	1	7	0.5 1.7			8				
FL-(1-4)		20 A	1	9		0.8 3.0		10	2	40 A		HPU/ACU-3
RECEPTACLES		20 A	1	11			0.4 3.0	12				
RECEPTACLES		20 A	1	13	0.4 0.1			14	2	30 A		DATA RECEPTACLE
BATTERY CHARGER		20 A	1	15		0.0 0.1		16				
BLOCK HEATER		30 A	1	17			0.0 0.4	18	1	20 A		CF-CP
SPARE		20 A	1	19	0.0 0.0			20	1	20 A		SPARE
SPARE		20 A	2	21		0.0 0.0		22	1	20 A		SPARE
				23			0.0 0.0	24	1	20 A		SPARE
SPARE		30 A	3	25	0.0 0.0			26				
				27		0.0 0.0		28	3	40 A		SPD
				29			0.0 0.0	30				
		TOTAL LOAD:			4 kVA	6 kVA	6 kVA					
		TOTAL AMPS:			37 A	52.9 A	54 A					

LOAD CLASSIFICATION	CONNECTED	DEMAND	ESTIMATED	PANEL TOTALS	
HVAC	13179 VA	100.00%	13179 VA		
RECEPTACLES	3240 VA	100.00%	3240 VA	CONNECTED LOAD:	16659 VA
MTR	504 VA	108.33%	546 VA	ESTIMATED DEMAND:	16701 VA
				CONNECTED CURRENT:	46.2 A
				EST. DEMAND CURRENT:	46.4 A

NOTES:

ESG ENGINEERING
6400 Peake Rd
Macon, GA 31210
Ph: (478) 474-4600
Fax: (478) 474-5045

GROUNDWATER WELLS #4 & #5

FOR THE
CITY OF FLOWERY BRANCH

REVISIONS NO.	DESCRIPTION	DATE
3	REV 3	12-10-25

CONFORMED SET

GEORGIA REGISTERED NO. 038816 PROFESSIONAL ENGINEER BRIAN W. NEWLAND

DRAWN BY: CT
CHECKED BY: BN
DATE: OCT 2025
SCALE: AS SHOWN

CONTENT:
LEGEND, NOTES, DETAILS, AND FIXTURE SCHEDULE

SHEET NO:
E1.0

EDC ELECTRICAL DESIGN CONSULTANTS
ELECTRICAL ENGINEERS
AUGUSTA OFFICE - PROJECT #: 25173
edc1973.com

GENERAL NOTES:

1. DIVISION 26 TO COORDINATE EXACT LOCATION OF UTILITY TRANSFORMER WITH POWER COMPANY PRIOR TO BID. DIVISION 26 SHALL COORDINATE EXACT ROUTING OF UNDERGROUND PRIMARY CONDUCTORS WITH POWER COMPANY PRIOR TO BID. NO ADDITIONAL COST SHALL BE INCURRED BY THE OWNER DUE TO THE LACK OF COORDINATION BY THE CONTRACTOR.
2. PROVIDE MARKING TAPE OVER ALL CONDUITS OUTSIDE OF BUILDING FOOTPRINT.
3. SURVEY AND SITE INFORMATION PROVIDED BY OTHERS. VERIFY ALL CONDITIONS ON SITE AND WITH OFFICIAL SURVEYS AND OTHERS TRADE.
4. CALL UNDERGROUND UTILITY CENTER AND VERIFY ALL UNDERGROUND UTILITIES.
5. UNDERGROUND CONDUIT SHALL BE SCHEDULE 40 PVC, UNLESS NOTED OTHERWISE.
6. CONTRACTOR SHALL STAKE-OFF ALL EXISTING UTILITIES PRIOR TO ROUGH-IN. ALL NEW INSTALLATION SHALL BE COORDINATION WITH EXISTING UTILITY LOCATIONS.
7. PROVIDE HANDHOLES AS REQUIRED BY NEC.

KEYED NOTES:

1. STUB OUT (2) 2" EMPTY CONDUITS WITH PULL STRINGS FOR FIBER. COORDINATE EXACT LOCATION AND REQUIREMENTS WITH TELCO COMPANY.
2. PROVIDE GROUND ROD AT LOCATION SHOWN. CONNECT GROUND ROD TO BUILDING STEEL AT CORNER. NUMBER AS REQUIRED FOR TOTAL RESISTANCE OF 25 OHMS. GROUND RODS SHALL BE 3/4" X 10'-0" COPPER CLAD STEEL. CONNECTION TO ALL GROUND RODS SHALL BE BY EXOTHERMIC WELD.
3. PROVIDE GROUND RING 30" BELOW GRADE WITH WARNING TAPE LOCATE 12" BELOW GRADE. CONSTRUCT GROUND RING WITH 1/0 AWG BARE COPPER WIRE.
4. MAKE GROUNDING CONNECTION WITH 1/0 AWG COPPER WIRE TO EQUIPMENT AS SHOWN. TYPICAL FOR ALL GROUNDING CONNECTIONS SHOWN.
5. COORDINATE EXACT GROUND RING BURIAL PATHING WITH CIVIL.
6. PROVIDE GROUND ROD ENCLOSURE WITH REMOVABLE CAP.
7. APPROXIMATE LOCATION OF GEORGIA POWER POLE MOUNTED TRANSFORMER. COORDINATE EXACT LOCATION WITH CIVIL PLANS.
8. APPROXIMATE LOCATION OF ELECTRICAL SERVICE DISCONNECT. SEE SHEET E3.1 FOR EXACT LOCATION AND SHEET E5.1 FOR CONDUIT AND CONDUCTOR REQUIREMENTS. COORDINATE EXACT ROUTING WITH CIVIL PLANS PRIOR TO ROUGH IN.

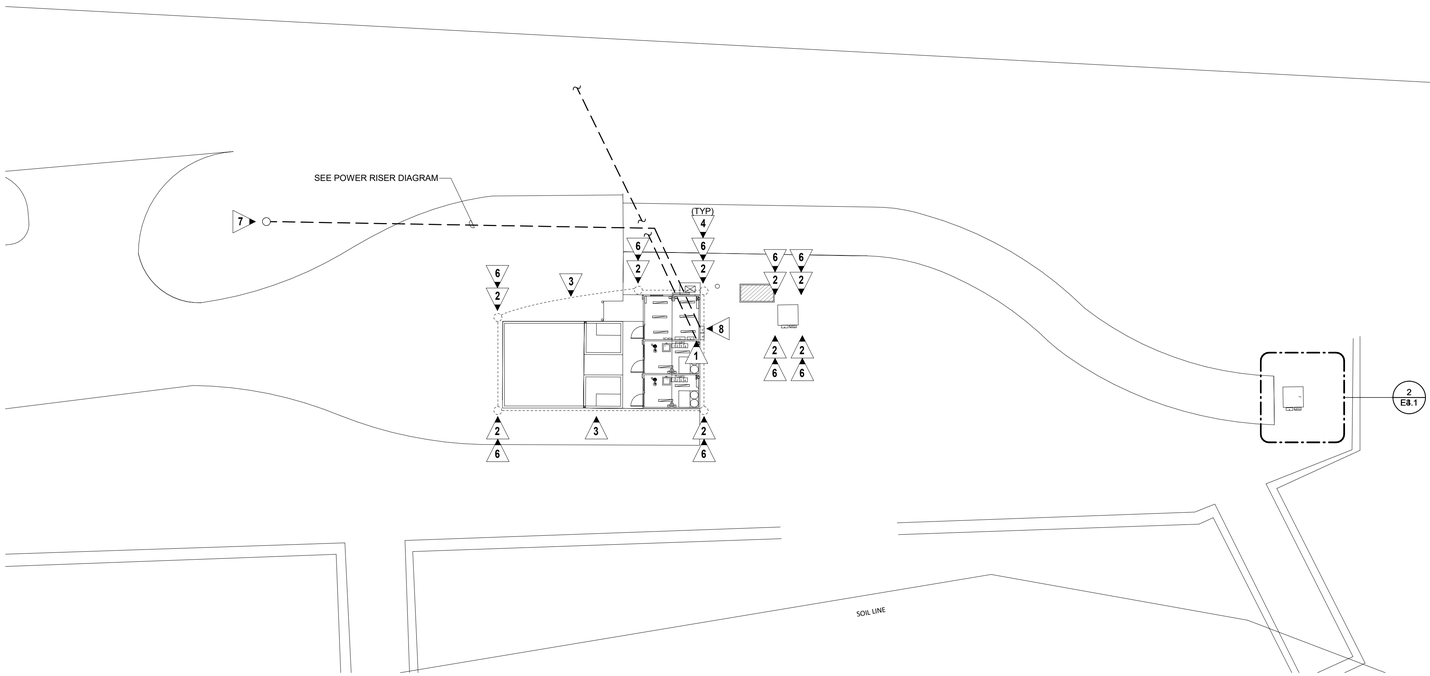

1 E1.1 ELECTRICAL SITE PLAN
SCALE: 1/16" = 1'-0"

ESG ENGINEERING
6400 Peake Rd
Macon, GA 31210
Ph: (478) 474-4496
Fax: (478) 474-5045

GROUNDWATER WELLS #4 & #5

FOR THE
CITY OF FLOWERY BRANCH

REVISIONS

NO.	DESCRIPTION	DATE
3	REV 3	12-10-25

CONFORMED SET

GEORGIA REGISTERED NO. 038816 PROFESSIONAL ENGINEER BRIAN W. NEWLAND

DRAWN BY: CT
CHECKED BY: BN
DATE: OCT 2025
SCALE: AS SHOWN

CONTENT:
ELECTRICAL SITE PLAN

SHEET NO:
E1.1

EDC
ELECTRICAL DESIGN CONSULTANTS
ELECTRICAL ENGINEERS
AUGUSTA OFFICE - PROJECT #: 25173
edc1973.com

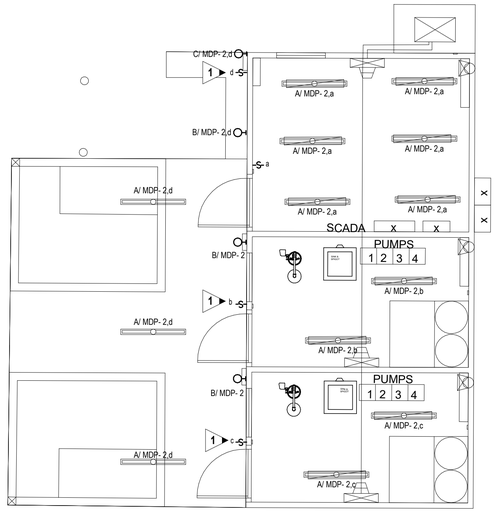

1 / E2.1 LIGHTING PLAN
SCALE: 1/4" = 1'-0"

GENERAL NOTES:

1. ALL EQUIPMENT/RACEWAYS SHALL BE SUITABLE FOR THE ENVIRONMENT IN WHICH IT IS INSTALLED.

KEYED NOTES:

1 ▶ PROVIDE DIE-CAST WEATHERPROOF JUNCTION BOX WITH LIGHT SWITCH AND WEATHERPROOF COVER TO CONTROL DESIGNATED LIGHT FIXTURE.

LIGHT FIXTURE DESIGNATION DESCRIPTION

EXAMPLE: B/HA1-1,b

- PANEL DESIGNATION: B/
- FIXTURE TYPE: TYPE "A" IF NO CAPITAL LETTER SHOWN: HA1
- CIRCUIT NUMBER: -1,
- SWITCH LEG DESIGNATION WHEN MULTIPLE SWITCHES ARE IN SAME SPARE/AREA: b

ESG ENGINEERING
6400 Peake Rd
Macon, GA 31210
Ph: (478) 474-4995
Fax: (478) 474-5045

GROUNDWATER WELLS #4 & #5

FOR THE
CITY OF FLOWERY BRANCH

REVISIONS

NO.	DESCRIPTION	DATE
3	REV 3	12-10-25

CONFORMED SET

GEORGIA REGISTERED NO. 038816 PROFESSIONAL ENGINEER BRYAN W. NEWLAND

DRAWN BY: CT
CHECKED BY: BN
DATE: OCT 2025
SCALE: AS SHOWN

CONTENT:
LIGHTING PLAN

SHEET NO:
E2.1

EDC
ELECTRICAL DESIGN CONSULTANTS
ELECTRICAL ENGINEERS
AUGUSTA OFFICE - PROJECT #: 25173
edc1973.com

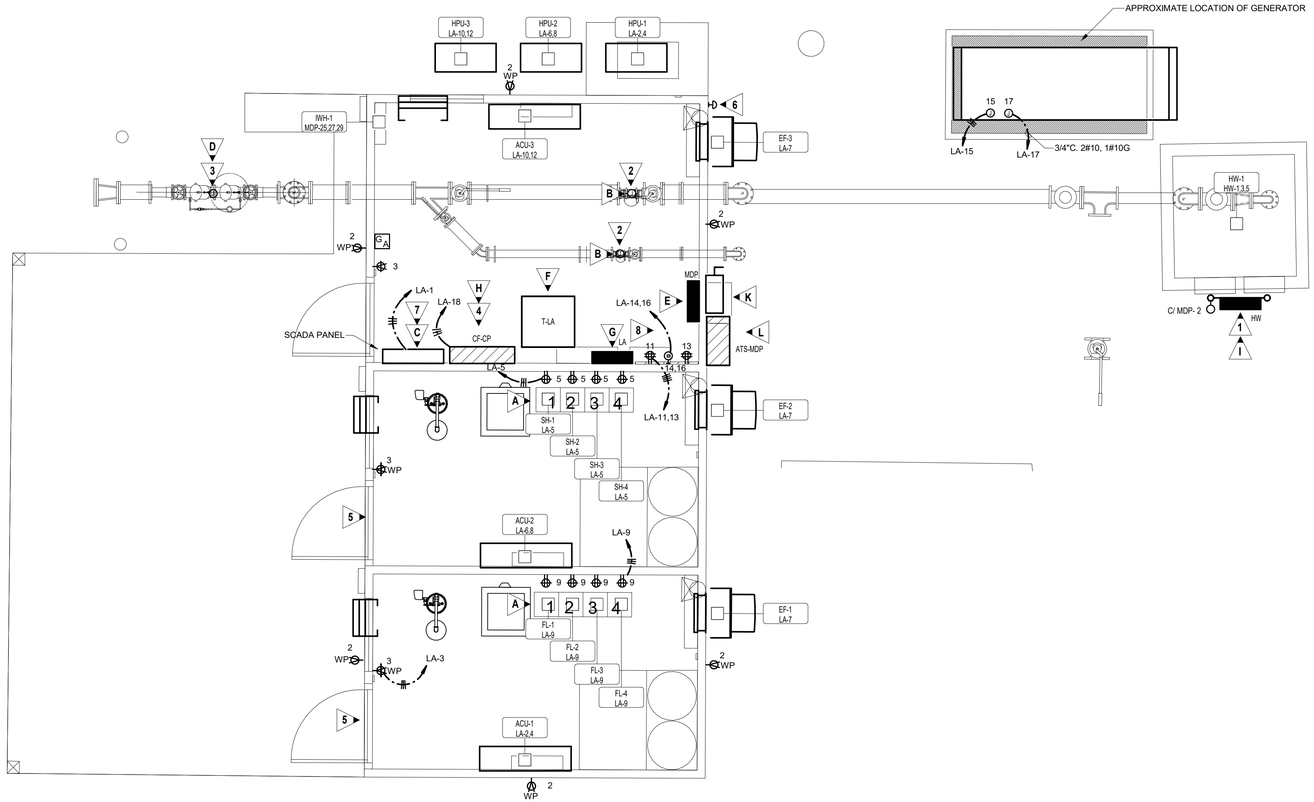

1 E3.1 POWER PLAN
SCALE: 3/8" = 1'-0"

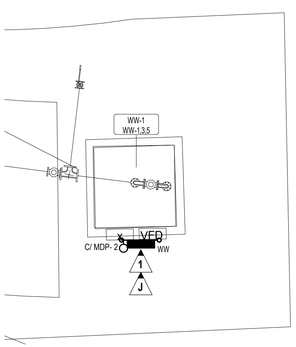

2 E3.1 ELECTRICAL SITE PLAN - WATERSTONE WELL
NO SCALE

MECHANICAL EQUIPMENT TAG DESCRIPTION

EXAMPLE: RAC-1 HR-7,9,11

EQUIPMENT ID:

PANEL - CIRCUIT NUMBER:

MECHANICAL/ PLUMBING EQUIPMENT

RAC-1 HR-7,9,11

NOTE: REFER TO MECHANICAL CONNECTION SCHEDULES FOR CIRCUITING INFORMATION

MECHANICAL CONNECTION SCHEDULE

ID	EQUIPMENT INFORMATION VOLT	PH	MCA	MOCP	CIRCUIT INFORMATION PANEL	NO.	APPARENT LOAD	CONDUIT & WIRE SIZE	NOTES	DISC TYPE	REMARKS
FANS											
EF-1	120 V	1	1.8 A	20.0 A	LA	7	168 VA	3/4"C,2#12,1#12G	A	MRS	-
EF-2	120 V	1	1.8 A	20.0 A	LA	7	168 VA	3/4"C,2#12,1#12G	A	MRS	-
EF-3	120 V	1	1.8 A	20.0 A	LA	7	168 VA	3/4"C,2#12,1#12G	A	MRS	-
HENDERSON WELL PUMP											
HW-1	480 V	3	43.0 A	45.0 A	HW	1,3,5	28600 VA	1"C,3#6,1#10G		CP	-
SPLIT SYSTEM OUTDOOR AIR UNITS											
HPU-1	208 V	1	21.0 A	25.0 A	LA	2,4	3494 VA	3/4"C,2#10,1#10G		FS	30/2/4X
HPU-2	208 V	1	21.0 A	25.0 A	LA	6,8	3494 VA	3/4"C,2#10,1#10G		FS	30/2/4X
HPU-3	208 V	1	36.0 A	40.0 A	LA	10,12	5990 VA	3/4"C,2#8,1#10G		FS	60/2/4X
SPLIT SYSTEMS INDOOR UNITS											
ACU-1	208 V	1	0.0 A	0.0 A	LA	2,4	0 VA		B	MRS	-
ACU-2	208 V	1	0.0 A	0.0 A	LA	6,8	0 VA		B	MRS	-
ACU-3	208 V	1	0.0 A	0.0 A	LA	10,12	0 VA		B	MRS	-
WATER HEATER											
IWH-1	480 V	3	101.6 A	125.0 A	MDP	25,27,29	67575 VA	1 1/2"C,3#1,1#6G		FS	200/3/3R
WATERSTONE WELL PUMP											
WW-1	480 V	3	13.8 A	20.0 A	WW	1,3,5	9145 VA	3/4"C,3#12,1#12G		CP	-

SCHEDULE NOTES:

A. INTERLOCK WITH WALL SWITCH (PROVIDED BY DIVISION 26). LOUVER SHALL FULLY OPEN PRIOR TO UNIT BEING ENERGIZED COORDINATE WITH DIVISION 23. COORDINATE ASSOCIATED LOUVERS WITH MECHANICAL PLANS PRIOR TO ROUGH IN. PROVIDE ALL RACEWAY AND CONDUCTORS FOR A COMPLETE AND OPERATIONAL SYSTEM.

B. "ACU" UNIT IS POWERED FROM "HPU" UNIT. PROVIDE 3/4"C., WITH PULLSTRING FROM "HPU" UNIT TO "ACU" UNIT FOR CONTROLS CABLING. PROVIDE MOTOR RATED SWITCH AT "ACU" UNIT IF POWERED AT 208VAC. IF POWERED AT 24VDC, MOTOR RATED SWITCH IS NOT REQUIRED. COORDINATE WITH MECHANICAL CONTRACTOR PRIOR TO ROUGH IN.

GENERAL NOTES:

1. ALL NEW CONDUIT, BOXES, AND SUPPORTS SHALL BE SCHEDULE 40 PVC, UNLESS NOTED OTHERWISE.
2. ALL FEEDER CONDUCTORS ARE BASED ON COPPER UNLESS OTHERWISE NOTED. CONTRACTOR SHALL BE RESPONSIBLE FOR PROVIDING LUGS ON ALL PANELS, BREAKERS, TRANSFORMERS, ETC. TO ACCOMMODATE CONDUCTOR SIZE SHOWN.
3. ALL EQUIPMENT/RACEWAYS SHALL BE SUITABLE FOR THE ENVIRONMENT IN WHICH IT IS INSTALLED.
4. PROVIDE CONTROLS TO ACTIVATE BOOSTER AND FLUORIDE PUMP WHEN WELL PUMP IS STARTED.
5. PRIOR TO PURCHASE COORDINATE CONTROLS WITH CITY OF FLOWERY BRANCH.

KEYED NOTES:

1. PROVIDE NEMA 4X CONTROL PANEL ON STAINLESS STEEL UNISTRUT RACK AS SHOWN. COORDINATE EXACT RACK REQUIREMENTS WITH CONTROL PANEL MANUFACTURER. REFER TO DETAIL 6/E5.1 FOR TYPICAL CONTROL PANEL RACK MOUNTING DETAIL.
2. PROVIDE (2) SHIELDED TWISTED PAIR CABLE IN 1/2"C. TO CONTROL PANEL FOR ULTRASONIC FLOW METER, EQUAL TO BELDEN 3043A OR AS PER CONTROL PANEL MANUFACTURER INSTALLATION DRAWINGS AND DETAILS.
3. PROVIDE (2) SHIELDED TWISTED PAIR CABLE IN 1/2"C. TO CONTROL/SCADA PANEL FOR DETECTOR ASSEMBLY, EQUAL TO BELDEN 3043A OR AS PER CONTROL/SCADA PANEL MANUFACTURER INSTALLATION DRAWINGS AND DETAILS.
4. SEE RISER DIAGRAM 2/E5.1 FOR CONNECTION REQUIREMENTS.
5. ALL CONDUIT, BOXES, AND SUPPORTS IN THIS SPACE SHALL BE SCHEDULE 40 PVC. SEAL ALL CONDUITS ENTERING THIS SPACE AGAINST MIGRATION OF ALL GAS WITH ELECTRICAL DUCT SEAL.
6. EMERGENCY SHUT OFF PUSH BUTTON FOR GENERATOR. PROVIDE NEMA 4X ENCLOSURE.
7. SCADA PANEL SHALL HAVE THE CAPABILITY TO COMMUNICATE WITH MAIN WATER PLANT VIA RADIO SIGNAL. COORDINATE EXACT SCADA REQUIREMENTS WITH THE CITY OF FLOWERY BRANCH STANDARDS.
8. PROVIDE 3/4"C. 2#10, 1#10G. FOR CIRCUIT

EQUIPMENT LIST:

- A CHEMICAL INJECTOR PUMPS
- B ULTRASONIC FLOW METER
- C SCADA PANEL
- D DETECTOR ASSEMBLY
- E PANEL MDP
- F TRANSFORMER T-LA
- G PANEL LA
- H CHEMICAL INJECTOR CONTROL PANEL
- I HENDERSON WELL CONTROL PANEL
- J WATERSTONE WELL CONTROL PANEL
- K SERVICE DISCONNECT
- L ATS-MDP

DISCONNECT TYPES

TYPE	FURNISH	DESCRIPTION
CP	-	CONTROL PANEL
CB	DIV. 26	DIV. 26 - CIRCUIT BREAKER
FS	DIV. 26	DIV. 26 - FUSED SWITCH
MRS	DIV. 26	DIV. 26 - MOTOR RATED SWITCH
NFS	DIV. 26	DIV. 26 - NON-FUSED SWITCH
NFS (M)	MANUF.	MANUF - NON-FUSED SWITCH

EDC
ELECTRICAL DESIGN CONSULTANTS
ELECTRICAL ENGINEERS
AUGUSTA OFFICE - PROJECT #: 25173
edc1973.com

ESG ENGINEERING
6400 Peake Rd
Macon, GA 31210
Ph: (478) 474-4406
Fax: (478) 474-5045

GROUNDWATER WELLS #4 & #5

FOR THE
CITY OF FLOWERY BRANCH

REVISIONS

NO.	DESCRIPTION	DATE
3	REV. 3	12-10-25

CONFORMED SET

GEORGIA REGISTERED NO. 038816 PROFESSIONAL ENGINEER BRIAN W. NEWMAN

DRAWN BY: CT
CHECKED BY: BN
DATE: OCT 2025
SCALE: AS SHOWN

CONTENT:
POWER PLAN

SHEET NO:
E3.1

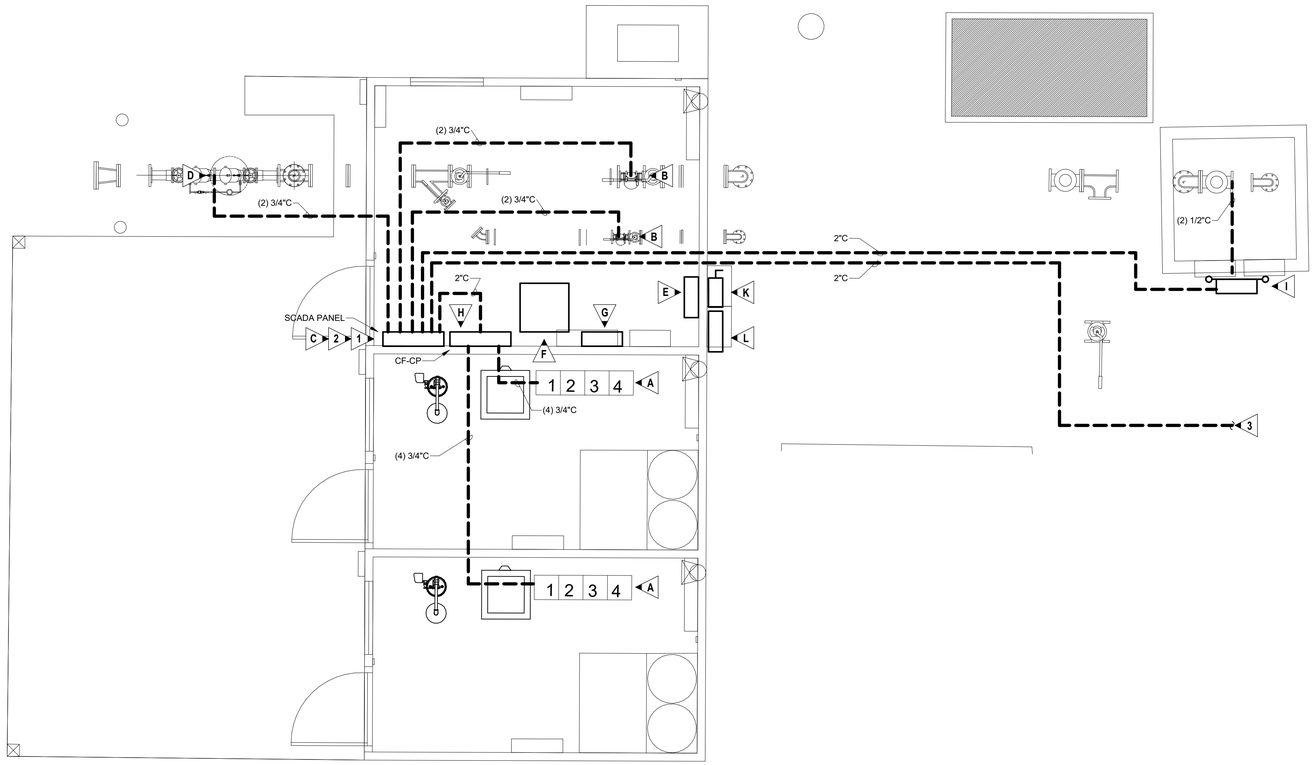

1 E4.1 SYSTEMS/CONTROL PLAN
SCALE: 3/8" = 1'-0"

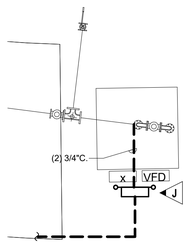

2 E4.1 SYSTEMS/CONTROL PLAN - WATERSTONE WELL
NO SCALE

EQUIPMENT LIST:

- A ➤ CHEMICAL INJECTOR PUMPS
- B ➤ ULTRASONIC FLOW METER
- C ➤ SCADA PANEL
- D ➤ DETECTOR ASSEMBLY
- E ➤ PANEL MDP
- F ➤ TRANSFORMER T-LA
- G ➤ PANEL LA
- H ➤ CHEMICAL INJECTOR CONTROL PANEL
- I ➤ HENDERSON WELL CONTROL PANEL
- J ➤ WATERSTONE WELL CONTROL PANEL
- K ➤ SERVICE DISCONNECT
- L ➤ ATS-MDP

GENERAL NOTES:

1. ALL EQUIPMENT/RACEWAYS SHALL BE SUITABLE FOR THE ENVIRONMENT IN WHICH IT IS INSTALLED.
2. PROVIDE CONTROLS TO ACTIVATE BOOSTER AND FLUORIDE PUMP WHEN WELL PUMP IS STARTED.
3. PRIOR TO PURCHASE COORDINATE CONTROLS WITH CITY OF FLOWERY BRANCH.

KEYED NOTES:

1 ➤ ALL CONDUIT ROUTINGS SHOWN ARE FOR DIAGRAMMATIC PURPOSES ONLY. COORDINATE EXACT ROUTING WITH CIVIL PLAN PRIOR TO ROUGH IN.

2 ➤ ROUTING SHOWN ARE TO PROVIDE CONDUIT SIZES AND CONNECTION POINTS ONLY. REFER TO RISER DIAGRAM ON SHEET E5.1 FOR CONDUCTOR/CABLING REQUIREMENTS FOR EACH CONDUIT.

3 ➤ CONDUIT TO CONTINUE TO WATERSTONE WELL. REFER TO 2/E4.1 FOR WELL LOCATION.

SCADA/CONTROLS NOTE:

CONTRACTOR SHALL EMPLOY THE SERVICES OF AN EXPERIENCED CONTROL SYSTEMS INTEGRATOR (CSI) TO PROVIDE SCADA IMPROVEMENTS AT THE NEW WELL SITE PLC AND WITHIN THE EXISTING CITY SCADA SYSTEM (AT THE WASTEWATER TREATMENT PLANT) AND IN THE EXISTING RTU/PANEL AT THE EXISTING/OFFSITE BOOSTER STATION. THE CITY'S CURRENT BOOSTER PUMPS RUN OFF A SCADA-READ, PRESSURE GAUGE SIGNAL TRANSMITTED VIA RADIO THAT IS CORRELATED TO ELEVATED TANK LEVEL (BOOSTER PUMPS TURN ON WHEN TANK LEVEL = 7' BELOW FULL AND TURN OFF WHEN TANK LEVEL = 1' BELOW FULL).

AT THE NEW WELL SITE THE CONTRACTOR SHALL UTILIZE SOUTHERN FLOW INC. FROM ALPHARETTA, GA TO PROVIDE A NEW REMOTE TELEMETRY UNIT WITH A PROGRAMMABLE LOGIC CONTROLLER (PLC) CAPABLE OF RECEIVING I/O'S AND RELAYS FROM THE NEW SUBMERSIBLE WELL PUMPS, NEW FLOW METERS, AND FROM THE OFFSITE PRESSURE GAUGE SIGNAL (RADIO). THE NEW SYSTEM SHALL BE CAPABLE OF STARTING THE NEW WELL PUMPS AT AN OPERATOR-SPECIFIED TANK LEVEL (SUCH AS 6' BELOW FULL), AND THE PUMPS SHALL RUN FOR EITHER A SET DURATION, TIME OF DAY, OR UNTIL A TOTALIZED FLOW HAS BEEN ACCUMULATED (SUCH AS 50,000 GPD, PER THE PROPOSED FLOW METERS). THE NEW WELL PUMPS SHALL ALTERNATE OPERATIONS SUCH THAT BOTH THE WATERSTONE AND HENDERSON PUMPS DO NOT RUN CONCURRENTLY, AND THE NEW WELL PUMPS SHALL NOT RUN WHILE THE EXISTING OFFSITE BOOSTER PUMPS ARE RUNNING. CONTRACTOR/CSI SHALL INCORPORATE NEW RELAYS FROM THE NEW WELL PUMPS, NEW FLOW METERS, AND NEW RELAYS FROM THE EXISTING BOOSTER STATION INTO THE CITY'S EXISTING SCADA SYSTEM.

THE NEW RTU SHALL BE BASED ON MODICON M340 AND COMMUNICATE VIA CELLULAR TO THE WASTEWATER TREATMENT PLANT. THE RTU SHALL BE COMPRISED OF ALL ITEMS OUTLINED IN THE REMOTE TELEMETRY UNIT REQUIREMENTS.
PROVIDE ALL EQUIPMENT, CABLING, DEVICES, ETC. FOR A COMPLETE AND OPERATIONAL SCADA SYSTEM.

REMOTE TELEMETRY UNIT (RTU) REQUIREMENTS:

- THE NEW RTU SHALL BE BASED ON MODICON M340 AND COMMUNICATE VIA CELLULAR TO THE WASTEWATER TREATMENT PLANT. THE RTU SHALL BE COMPRISED OF THE FOLLOWING BELOW.
- ENCLOSURE:
  a. NEMA 12 PAINTED CARBON STEEL ENCLOSURE
  b. ENCLOSURE SUBPANEL
  c. CUSTOM SHELF FOR CELLULAR MODEM
- PLC:
  a. MODICON M340 CPU
  b. 24VDC POWER SUPPLY
  c. ETHERNET PORT
  d. 6-SLOT RACK (RECOMMENDED FOR EXPANSION)
  e. 8-CHANNEL ANALOG INPUT
  f. 4-CHANNEL ANALOG OUTPUT
  g. 16-CHANEL DISCRETE INPUT
  h. 16-CHANEL DISCRETE OUTPUT
- POWER SUPPLY AND UPS:
  a. 24VDC PANEL POWER SUPPLY AND UPS
- COMMUNICATION EQUIPMENT
  a. SIERRA WIRELESS CELLULAR MODEM XR60 MODEM PROVISIONING INCLUDING MODEM SETUP WITH CARRIER ACTIVATION, TESTING AND LABELING
- MISC:
  a. ISOLATION RELAYS AND SOCKETS ON ALL DISCRETE INPUTS AND OUTPUT
  b. SURGE BOARD ARRESTORS FOR ANALOG SIGNALS
  c. FUSE BLOCKS WITH INDICATORS
  d. CIRCUIT BREAKERS
  e. WIRE TERMINALS
  f. WIRE DUCT
  g. INTRUSION SWITCH

EXISTING BOOSTER PUMP STATION MODIFICATIONS:

AT THE EXISTING BOOSTER PUMP STATION (ROBERTS DR GROUND STORAGE TANK SITE), THE SYSTEM INTEGRATOR SHALL MODIFY THE PROGRAMMING AND PHYSICAL I/O IF NECESSARY TO INCORPORATE THE REQUIRED INTERLOCKS DESCRIBED ABOVE TO PREVENT THE DIFFERENT WELL SITES FROM OPERATING AT THE SAME TIME AS DESCRIBED IN SCADA/CONTROL NOTES.

EXISTING SCADA SYSTEM MODIFICATIONS AT THE WASTEWATER TREATMENT PLANT

THE SYSTEM INTEGRATOR SHALL PROVIDE AND INSTALL A SIERRA WIRELESS CELLULAR MODEM AT THE WASTEWATER TREATMENT PLANT, AS WELL AS ANY OTHER ANTENNAS AND ACCESSORIES NECESSARY TO COMMUNICATE TO THE NEW WELL SITE RTU. THE EXISTING WONDERWARE HMI SHALL BE MODIFIED TO INCLUDE THE WELL SITE AND THE FUNCTIONALITY ABOVE INCLUDING THE INTERLOCKS AND THE PRESSURE TRANSMITTER AT THE EXISTING BOOSTER PUMP STATION.

COMPATIBILITY

THE SYSTEM INTEGRATOR SHALL ENSURE THE NEW CELLULAR BASED RTU IS COMPATIBLE WITH THE EXISTING RADIO BASED TELEMETRY SYSTEM AND EXISTING SCADA HMI TO PROVIDE RELIABLE CONTROL AND OPERATOR INTERFACE FOR THE FLOWERY BRANCH.

EDC
ELECTRICAL DESIGN CONSULTANTS
ELECTRICAL ENGINEERS
AUGUSTA OFFICE - PROJECT #: 25173
edc1973.com

ESG ENGINEERING
6400 Peake Rd
Macon, GA 31210
Ph: (478) 474-4995
Fax: (478) 474-5045

GROUNDWATER WELLS #4 & #5
FOR THE
CITY OF FLOWERY BRANCH

REVISIONS

NO.	DESCRIPTION	DATE
3	REV 3	12-10-25

CONFORMED SET

GEORGIA REGISTERED NO. 033816 PROFESSIONAL ENGINEER BRIAN W. NEWLAND

DRAWN BY: CT
CHECKED BY: BN
DATE: OCT 2025
SCALE: AS SHOWN

CONTENT:
SYSTEMS/CONTROLS PLAN

SHEET NO:
E4.1

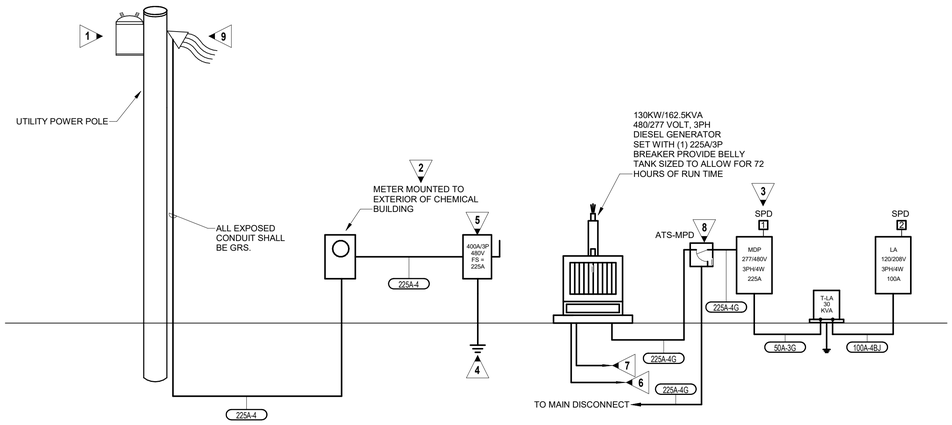

1 E5.1 POWER RISER DIAGRAM
NO SCALE

2 E5.1 POWER RISER DIAGRAM - CF CONTROL PANEL
NO SCALE

3 E5.1 POWER RISER DIAGRAM - CONTROL PANEL
NO SCALE

KEYED NOTES:

1. NEW UTILITY POLE MOUNTED TRANSFORMERS TO BE PROVIDED AND INSTALLED BY UTILITY COMPANY.
2. METER BY UTILITY COMPANY, INSTALLED BY CONTRACTOR.
3. CONTRACTOR SHALL FIELD MARK SERVICE EQUIPMENT IN ACCORDANCE WITH NEC 110.24 IN REGARD TO MAXIMUM AVAILABLE FAULT CURRENT. MARKING SHALL CLEARLY DENOTE MAXIMUM AVAILABLE FAULT CURRENT AND INCLUDE THE DATE THE FAULT CURRENT CALCULATION WAS PERFORMED. DIVISION 26 SHALL BE RESPONSIBLE FOR OBTAINING AVAILABLE FAULT CURRENT AT TRANSFORMER FROM LOCAL UTILITY. PERFORM CALCULATIONS BASED ON SUCH.
4. SEE DETAIL 1/E6.0 FOR SERVICE GROUNDING AND BONDING PLATE DETAIL.
5. 400A, 3 POLE SERVICE ENTRANCE RATED DISCONNECT FUSED DOWN TO 225A. DISCONNECT SHALL BE NEMA 4X RATED. PROVIDE WITH NEUTRAL BAR AND EQUIPMENT GROUND BAR. INSTALL BONDING JUMPER AT DISCONNECT.
6. 1 1/4"C., TO REMOTE GENERATOR ANNUNCIATOR SEE MANUFACTURER'S PUBLISHED DATA FOR NUMBER OF CONDUCTORS REQUIRED. SEE SHEET E3.1 FOR LOCATION OF ANNUNCIATOR.
7. 2-1"C., TO AUTOMATIC TRANSFER SWITCH FOR CONTROL WIRES
8. 225A, 3 POLE, NEMA 4X, SOLID NEUTRAL TIME DELAYED AUTOMATIC TRANSFER SWITCH.
9. NEW WEATHERHEAD TO BE PROVIDED AND INSTALLED BY DIVISION 26. 10' OF SLACK CONDUCTORS SHALL BE PROVIDED FOR UTILITY COMPANY TO CONNECT TO POLE MOUNTED UTILITY TRANSFORMER.
10. CHEMICAL INJECTOR PUMP TO BE POWERED BY 120V RECEPTACLE. SEE SHEET E3.1 FOR CONNECTION REQUIREMENTS. TYPICAL FOR ALL PUMPS CONNECTED TO CONTROL PANEL.

SPD SCHEDULE

TYPE	DESCRIPTION	NOTES
1	MAIN DISTRIBUTION PANEL (277/480 VOLTS, 3 PHASE) - 300,000 AMP RATED	1
2	DISTRIBUTION PANEL (120/208 VOLTS, 3 PHASE) - 80,000 AMP RATED	1

SCHEDULE NOTES:

1. SEE SPECIFICATIONS FOR DETAILS.

FEEDER SCHEDULE

DESIGNATION	CONDUIT & CONDUCTORS
20A-3G	3/4" C - 2#12, 1#12G
20A-4G	3/4" C - 3#12, 1#12G
30A-4G	1" C - 4#10, 1#10G
50A-3G	1" C - 3#8, 1#10G
50A-4G	1" C - 4#8, 1#10G
100A-4BJ	2" C - 4#2, 1#8G
225A-4	2.5" C - 4#4/0
225A-4G	2.5" C - 4#4/0, 1#4G
CAT6	2" C - CAT6 CABLE
STP - 1	3/4" C -SHIELDED TWISTED PAIR
STP - 2	[2] 3/4" C -SHIELDED TWISTED PAIR

200A - 4 G - N — FEEDER DESIGNATION

- (N) - INDICATES 200% NEUTRAL CONDUCTOR
- GROUND CONDUCTORS:
  - (0) - NO GROUND
  - (G) - EQUIPMENT OR ISOLATED GND
  - (BJ) - GROUNDING ELECTRODE
  - (BJIG) - GROUNDING ELECTRODE AND ISOLATED GND
- SYSTEM DESCRIPTION:
  - (3) - 1Ø 3W OR 3Ø 3W
  - (4) - 3Ø, 4W
- CONDUCTOR AMPACITY:
  - (AL) - INDICATES ALUMINUM CONDUCTORS

EDC
ELECTRICAL DESIGN CONSULTANTS
ELECTRICAL ENGINEERS
AUGUSTA OFFICE - PROJECT #: 25173
edc1973.com

ESG ENGINEERING
6400 Peake Rd
Macon, GA 31210
Ph.: (478) 474-4696
Fax: (478) 474-5045

GROUNDWATER WELLS #4 & #5

FOR THE
CITY OF FLOWERY BRANCH

REVISIONS

NO.	DESCRIPTION	DATE
3	REV 3	12-10-25

CONFORMED SET

GEORGIA REGISTERED NO. 038816 PROFESSIONAL ENGINEER JONATHAN W. NEWLIN

DRAWN BY: CT
CHECKED BY: BN
DATE: OCT 2025
SCALE: AS SHOWN

CONTENT:
POWER RISER DIAGRAM

SHEET NO:
E5.1

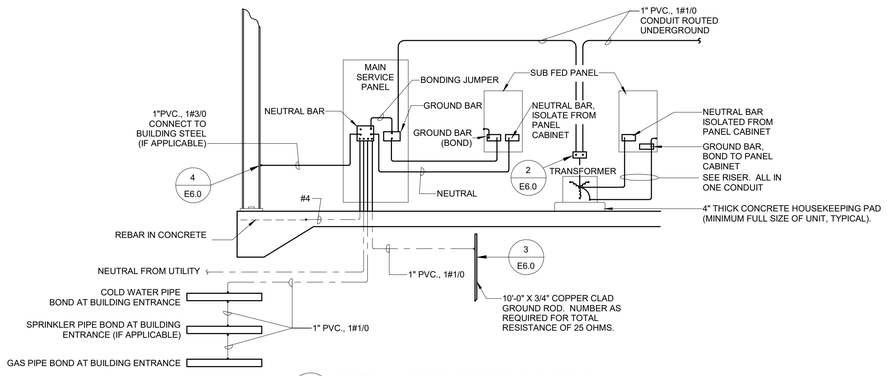

1 E6.0 DETAIL - SERVICE GROUNDING
NO SCALE

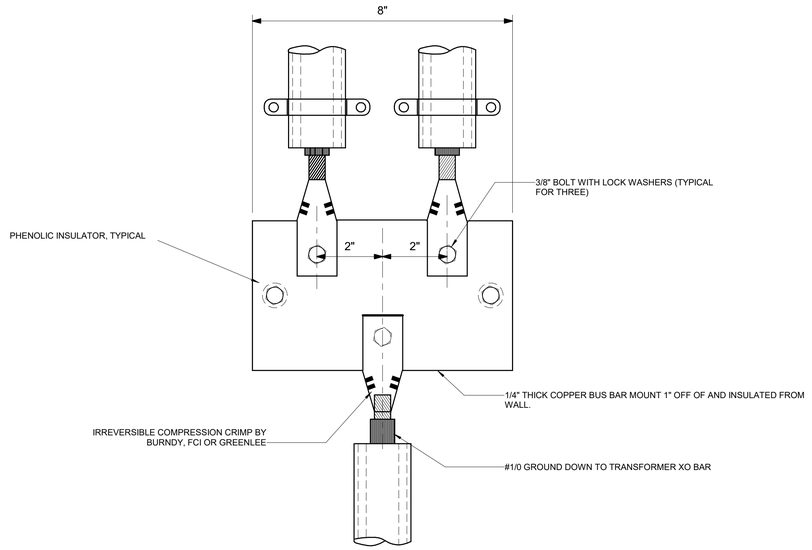

2 E6.0 DETAIL - GROUND CABLE TO BUS BAR
NO SCALE

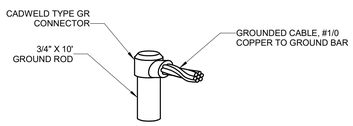

3 E6.0 DETAIL - CABLE CONNECTION TO GROUND ROD
NO SCALE

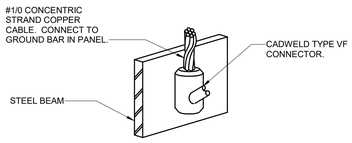

4 E6.0 DETAIL - CABLE CONNECTION TO STEEL BEAM
NO SCALE

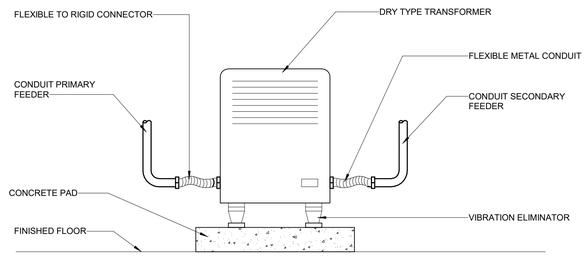

5 E6.0 DETAIL - FLOOR MOUNTED TRANSFORMER
NO SCALE

ESG ENGINEERING
6400 Peake Rd
Macon, GA 31210
Ph.: (478) 474-4996
Fax: (478) 474-5045

GROUNDWATER WELLS #4 & #5

FOR THE
CITY OF FLOWERY BRANCH

REVISIONS

NO.	DESCRIPTION	DATE
3	REV 3	12-10-25

CONFORMED SET

GEORGIA REGISTERED NO. 038816 PROFESSIONAL ENGINEER BRYAN W. NEWLAND

DRAWN BY: CT
CHECKED BY: BN
DATE: OCT 2025
SCALE: AS SHOWN

CONTENT:
ELECTRICAL DETAILS

SHEET NO:
E6.0

EDC
ELECTRICAL DESIGN CONSULTANTS
ELECTRICAL ENGINEERS
AUGUSTA OFFICE - PROJECT #: 25173
edc1973.com

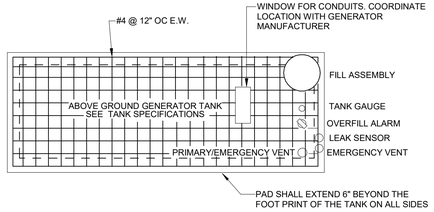

1 E6.1 DETAIL - GENERATOR CONCRETE PAD AND FUEL TANK - PLAN VIEW
NO SCALE

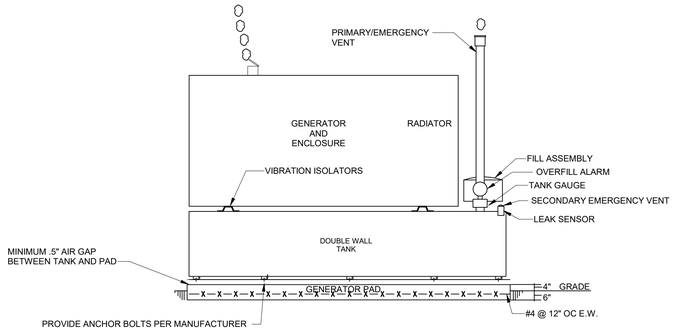

TANK SPECIFICATIONS

PRIMARY TANK SHALL BE MINIMUM 10 GAUGE STEEL, UL142 LABEL AND HAVE THE FOLLOWING:

- FUEL SUPPLY AND FUEL RETURN OPENINGS (1" NPT MINIMUM EACH)
- *NORMAL (PRIMARY) TANK VENT OPENING ON PRIMARY TANK (2" NPT MINIMUM)
- *EMERGENCY PRESSURE RELIEF (SECONDARY) VENT OPENING SIZED PER NFPA 30
- OPENING FOR LOW LEVEL AND HIGH LEVEL FUEL ALARM SWITCHES (2"NPT MINIMUM)
- MECHANICAL FUEL GAUGE OPENING (1.5" NPT MINIMUM)
- STICK PORT OPENING (1.5" NPT MINIMUM)
- TANK FILL BUNG (2" NPT MINIMUM)

SECONDARY TANK SHALL HAVE THE FOLLOWING:

- MONITORING PORT ON INTERSTICE OF SECONDARY TANK (2" NPT MINIMUM)
- *EMERGENCY PRESSURE RELIEF (SECONDARY) VENT OPENING SIZED PER NFPA 30

* PRIMARY AND EMERGENCY SECONDARY TANK VENTS SHALL BE EXTENDED OUTSIDE OF THE GENERATOR ENCLOSURE AND TERMINATE AT A MINIMUM HEIGHT OF (12) FEET ABOVE GRADE

FILL ASSEMBLY:

- TANK FILL CONNECTION SHALL BE A CAM LOCK STYLE TIGHT FILL WITH AN OVERFILL PREVENTION VALVE (CLAY & BAILEY MINO #1228 OR APPROVED ALTERNATE) SET TO STOP FLOW OF FUEL WHEN THE TANK REACHES 95% OF TANK CAPACITY. THE FILL SHALL ALSO INCLUDE A SPILL CONTAINMENT BUCKET (EBW MODEL # 706-420-01) AND SHALL BE LOCATED SUCH THAT THE DELIVERY OPERATOR HAS DIRECT ACCESS TO THE TANK GAUGE

TANK GAUGING:

- A MECHANICAL DIRECT READING TYPE OF FUEL LEVEL GAUGE INDICATOR SHALL BE PROVIDED IN ADDITION TO ANY ELECTRONIC MONITORING SYSTEM. THE FUEL LEVEL INDICATOR SHALL BE A ROCHESTER GAUGES SERIES 6500 SENIOR GAUGE OR APPROVED ALTERNATE AND SHALL BE MOUNTED SO THAT THE DELIVERY OPERATOR HAS DIRECT ACCESS TO IT

LEAK AND OVERFILL ALARMS:

- A LIQUID SENSOR SHALL BE MOUNTED INSIDE THE SECONDARY TANK AND WIRED TO THE GENERATOR CONTROL PANEL. SENSOR SHALL BE INCON TSP-ULS OR APPROVED ALTERNATE
- A REMOTE OVERFILL BATTERY OPERATED ALARM HORN (MORRISON BROTHERS 918TCP OR APPROVED ALTERNATE) SHALL BE PROVIDED AND ALARM WHEN TANK REACHES 90% CAPACITY AND SHALL BE MOUNTED SO THAT THE DELIVERY OPERATOR HAS DIRECT ACCESS TO IT

SIGNAGE:

- TANK SHALL BE LABELED WITH FUEL TYPE AND CAPACITY. LABEL SHALL BE 2" WHITE LETTERS ON BLACK BACKGROUND AND ATTACHED TO THE TANK WITH ADHESIVE

ACCESSORIES:

- EMERGENCY VENT SHALL BE OPW 202 OR EQUAL SIZED BY TANK MANUFACTURER PER NFPA 30
- DIELECTRIC COUPLINGS AND/OR FLANGED KITS SHALL BE PROVIDED AT ALL COPPER TO STEEL CONNECTIONS AND AS REQUIRED TO ISOLATE THE PIPING FROM THE TANK.

2 E6.1 DETAIL - GENERATOR CONCRETE PAD - SIDE VIEW
NO SCALE

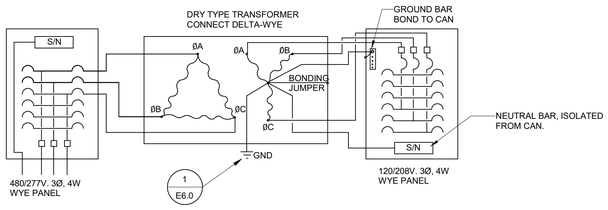

4 E6.1 DETAIL - DRY TYPE TRANSFORMER CONNECTION
NO SCALE

FOR 120/208V PANELS:

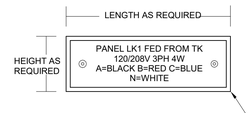

NOTE: DESIGNATIONS ARE FOR REFERENCE ONLY. LABELING SHALL BE OF EQUIPMENT BEING SERVED.

FOR 277/480V PANELS:

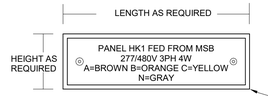

FOR TRANSFORMERS:

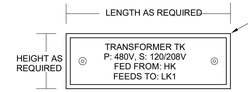

FOR DISCONNECTS:

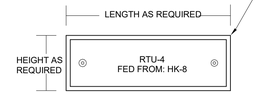

POWER LABEL SHALL BE: BLACK PHENOLIC PLATE WITH ENGRAVED WHITE LETTERING, POP RIVETED TO EQUIPMENT

3 E6.1 IDENTIFICATION TAG DETAIL
NO SCALE

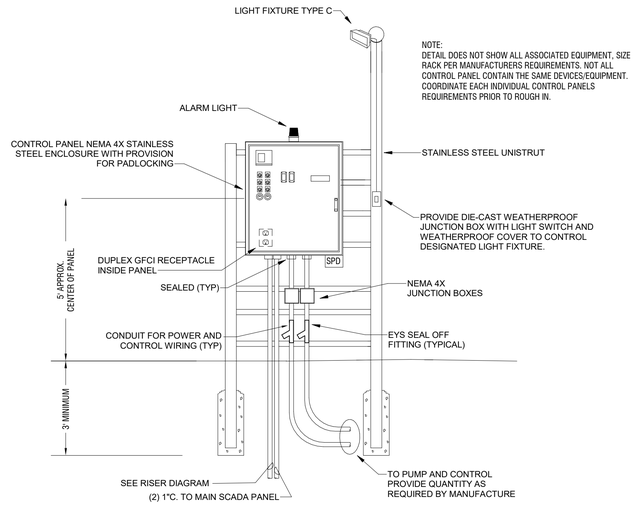

5 E6.1 DETAIL - TYPICAL CONTROL PANEL RACK DETAIL
NO SCALE

EDC
ELECTRICAL DESIGN CONSULTANTS
ELECTRICAL ENGINEERS
AUGUSTA OFFICE - PROJECT #: 25173
edc1973.com

ESG ENGINEERING
6400 Peake Rd
Macon, GA 31210
Ph: (478) 474-4995
Fax: (478) 474-5045

GROUNDWATER WELLS #4 & #5
FOR THE
CITY OF FLOWERY BRANCH

REVISIONS

NO.	DESCRIPTION	DATE
3	REV 3	12-10-25

CONFORMED SET

GEORGIA REGISTERED NO. 038816 PROFESSIONAL ENGINEER BRYAN W. NEWLAND

DRAWN BY: CT
CHECKED BY: BN
DATE: OCT 2025
SCALE: AS SHOWN

CONTENT:
ELECTRICAL DETAILS

SHEET NO:
E6.1

PLUMBING SPECIFICATIONS

Provide all plumbing items indicated on the drawings, described herein or otherwise required for a complete and proper installation, including:
A. Plumbing fixtures, fittings and equipment.
B. Hot and cold water systems.
C. Drain waste and vent piping systems.
D. Indirect waste piping, including all valves, traps, piping and accessories for all equipment. Size per equipment requirements.

Comply with all applicable codes, standards and ordinances, including requirements of the Georgia State Minimum Standard Plumbing Code (2018 International Plumbing Code with all Georgia State Amendments), Georgia State Minimum Standard Gas Code (2018 International Gas Code with all Georgia State Amendments), Georgia State Minimum Standard Energy Code (2015 International Energy Conservation Code with all Georgia State supplements and Amendments), and the DOJ 2010 ADA Standards for Accessible Design with Georgia Amendments of Rule 120-3-20.

The contractor should not attempt to precisely scale dimensions from these drawings to obtain construction dimensions and clearance. The contractor shall verify all actual dimensions and clearances. Although these plans are diagrammatic in nature, they shall be followed as closely as site conditions, new construction, and work by other trades shall permit. Deviations from these drawings, which are required to conform to the available space or to actual building construction, shall be made at no additional cost to the owner.

The submission of a bid or proposal will be construed as evidence that the contractor has familiarized himself with the plans and building site. Claims made subsequent to the proposal for materials and/or labor due to difficulties encountered will not be recognized unless these difficulties could not have been foreseen, even though proper examination had been made.

Fabrication or ordering of any material or equipment prior to verification of site conditions shall be done at the contractor's risk.

All equipment and material shall be new and of first quality. Equipment and material shall be the same or equal to the basis of design listed on these drawings.

Coordinate with all trades and verify all equipment rough-in items and locations with the equipment supplier or contractor. All re-work and corrections required due to lack of coordination shall be the contractor's responsibility, and done at no cost to the owner.

Submit shop drawings and material data submittals to the engineer for approval before installation. No substitutions shall be allowed without prior approval by the engineer. Product data for piping, insulation, valves, specialties and all fixtures and equipment scheduled and specified here. For each submittal for review, allow 15 days excluding delivery time to and from the Contractor.

All equipment and flue materials shall be U.L. listed.

Installation shall comply with manufacturer requirements including all clearances recommended for proper operation of service. All serviceable parts shall be readily accessible.

Sanitary drain, roof drainage and vent piping shall be ASTM D2665 schedule 40 PVC with PVC Socket Fittings (ASTM D 2665, made to ASTM D 3311, drain, waste, and vent patterns and to fit Schedule 40 pipe). Slope pipe sizes 6" and under at 1/8 inch per foot continuously toward public sewer. Slope pipe sizes 8" and larger at 1/16 inch per foot continuously toward public sewer. All aboveground piping shall be adequately supported. Install underground, PVC plastic drainage piping according to ASTM D2321. Install aboveground PVC piping according to ASTM D 2665. Cellular Core PVC (Foam Core PVC) not acceptable. Provide PVC IPEX type 1 expansion joints on alternating floors on horizontal sewer, storm, and vent risers over 30 feet tall.

Insulate aboveground floor drains, traps, and sanitary drain piping within 10 feet of drain receiving condensate and equipment drain water below 60° with 1" thick type i performed glass-fiber pipe insulation, 1-1/2" cellular glass, or 1" flexible elestomeric.

All above ground domestic water distribution piping shall be ASTM D 2846, SDR11, schedule 40 CPVC with socket fittings. All piping shall be adequately supported. Disinfect all domestic water piping after installation. All underground domestic water distribution piping 1" and smaller shall be ASTM D 876 & ASTM F 877 PEX with no fittings underground. All underground domestic water distribution piping 1-1/4" and larger shall be ASTM D 1785 schedule 40 PVC with ASTM D 2466 PVC socket fittings. Wrap piping larger than 2" in return air plenums with fire barrier plenum rated wrap.

Chemical waste piping shall be Charlotte pipe Chemdrain CPVC chemical waste schedule 40 drainage dipe and fittings.

DOMESTIC WATER PIPING CLEANING

A. Clean and disinfect potable domestic water piping as follows:
   1. Purge new piping and parts of existing piping that have been altered, extended, or repaired before using.
   2. Use purging and disinfecting procedures prescribed by authorities having jurisdiction; if methods are not prescribed, use procedures described in either AWWA C651 or AWWA C652 or follow procedures described below:
      a. Flush piping system with clean, potable water until dirty water does not appear at outlets.
      b. Fill and isolate system according to either of the following:
         1) Fill system or part thereof with water/chlorine solution with at least 50 ppm (50 mg/L) of chlorine. Isolate with valves and allow to stand for 24 hours.
         2) Fill system or part thereof with water/chlorine solution with at least 200 ppm (200 mg/L) of chlorine. Isolate and allow to stand for three hours.
      c. Flush system with clean, potable water until no chlorine is in water coming from system after the standing time.
      d. Repeat procedures if biological examination shows contamination.
      e. Submit water samples in sterile bottles to authorities having jurisdiction.
B. Prepare and submit reports of purging and disinfecting activities. Include copies of water-sample approvals from authorities having jurisdiction.
C. Clean interior of domestic water piping system. Remove dirt and debris as work progresses.

Domestic water piping shall be insulated with Owens Corning type ASJ/SSL-II heavy density fiber glass with all service jacket. Insulation shall have a flame spread rating not to exceed 25 and a smoke density not to exceed 50 when tested in accordance with U.B.C. standard 42-1. Provide mastic on all joints and exposed ends of insulation. Insulate domestic Cold water piping in unconditioned spaces such as exterior corridors, attic, basements, etc with 1/2" thick insulation for piping 1-1/4" & smaller and 1" thick insulation for piping 1-1/2" & larger. Insulate all domestic Hot water supply and return piping with 1" thick insulation for piping 1-1/4" & smaller and 1-1/2" thick insulation for piping 1-1/2" & larger.

HW & CW Valves: Use pipe size valves, as shown below:
A. Ball: Spears CPVC True Union.
B. Check: Spears CPVC True Union.

Lavatory/ Sink supply fittings: NSF Standard: Comply with NSF/ANSI 61 Annex G, "Drinking Water System Components – Health Effects," for supply-fitting materials that will be in contact with potable water. Standard: ASME A112.18.1/CSA B125.1. Supply Stops: Chrome-plated-brass, one-quarter-turn, ball-type valve with inlet connection matching supply piping. Wheel handle operation. Risers: Chrome-plated, soft-copper flexible tube for exposed applications and ASME A112.18.6, braided- or corrugated-stainless-steel, flexible hose for conceal behind cabinet applications.

Provide ADA Supply and Drain Protective Shielding Guards on ADA fixtures that piping is exposed. Supply and Drain Protective Shielding Guards shall comply with ICC A117.1 and Americans with Disabilities Act (ADA) requirements. Manufactured plastic wraps shall cover hot and cold water supplies, trap, and drain piping.

All pipe hangers, clamps and channels shall be adequately sized to carry pipe loads and prevent sagging.

All other materials not specifically described but required for a complete and proper installation of work of this section, shall be new, first quality of their respective kinds, and as selected by the contractor subject to acceptance by the engineer.

Lay out the plumbing system in careful coordination with the drawings, determining proper elevations for all components of the system and using only the minimum number of bends to produce a satisfactorily functioning system. Follow the general layout shown on the drawings in all cases except where other work may interfere. Unless shown otherwise, lay out all pipes to fall within partition, wall floor, or roof cavities, and to not require furring other than as shown on the drawings.

Do not cut into or reduce the size of any load-carrying member without the prior approval of the architect. Install all pipes to clear all beams and obstructions.

Extend all plumbing vents above roof to parapet height.

Permanently close and make weatherproof any openings or penetrations of the building envelope made for plumbing systems. All wall and floor penetrations shall be sleeved. All exterior wall or foundation wall penetrations shall use a mechanical seal.

Coordinate all roof penetrations with architectural plans and building and roofing trades.

Provide shut-off balls valves and unions at all water connections to equipment and appliances.

Isolate all dissimilar metals with "EPCO" dielectric unions, except for brass or bronze valves with steel pipe.

Protect the potable water supply against backflow and siphonage from equipment, fixtures, etc., using approved backflow and anti-siphon devices.

Thoroughly clean all piping and equipment. Removing all dirt, rust, oil, and plaster.

Test Sanitary and storm drainage piping by plugging all openings and filling with water to a height equal to a 10 foot head. Allow to stand one hour or longer as required. Repair leaking joints and then re-test.

No work shall be covered until it has been inspected and accepted by the local authority.

Domestic water piping tests: Fill domestic water piping. Check components to determine that they are not air bound and that piping is full of water. Test for leaks and defects in new piping and parts of existing piping that have been altered, extended, or repaired. Leave new, altered, extended, or replaced domestic water piping uncovered and unconcealed until it has been tested and approved. Expose work that was covered or concealed before it was tested. Cap and subject piping to static water pressure of 50 psig (345 kPa) above operating pressure, without exceeding pressure rating of piping system materials. Isolate test source and allow it to stand for four hours. Leaks and loss in test pressure constitute defects that must be repaired. Repair leaks and defects with new materials, and retest piping or portion thereof until satisfactory results are obtained.

The entire system shall be warranted for a period of one (1) year beginning with Owner's acceptance of the work. All labor and materials necessary to repair or replace the system, or portions thereof, during that time shall be warranted for a period of one (1) year from the repair or replacement.

Install piping in concealed locations, unless otherwise indicated and except in equipment rooms, and service areas. Install piping indicated to be exposed and piping in equipment rooms and service areas at right angles or parallel to building walls. Diagonal runs are prohibited unless specifically indicated otherwise. Install piping above accessible ceilings to allow sufficient space for ceiling panel removal. Install piping to permit valve servicing. Install piping at indicated slopes. Install piping free of sags and bends. Install fittings for changes in direction and branch connections. Install piping to allow application of insulation. Select system components with pressure rating equal to or greater than system operating pressure. Install escutcheons for penetrations of walls, ceilings, and floors. Verify final equipment locations for roughing-in.

Confirm that millwork is constructed with adequate provision for the installation of counter top lavatories and sinks.

Seal fixtures to wall and floor surfaces with sealant, color to match fixture.

All vents thru roof (VTR) shall be offset a minimum of 10'-0" from all outside air intakes.

Provide Plastic Pipe Markers on all aboveground plumbing piping that Comply with ASME A13.1. Minimum information indicating flow direction arrow and identification of fluid being conveyed. Install labeling on pipe at intervals of not more than 20 feet and at least once in each room.

Provide a complete through penetration fire stopping assembly for fire resistance rated wall assemblies. The through penetration assembly must be listed by an approved third-party test agency (UL), and include the entire listed assembly with all notations. Refer to architectural drawings for fire wall locations.

Approved manufactures: (Items submitted shall be approved by architect and engineer. Architect and engineer reserve the right to reject any item substituted for basis of design item for any reason.)

Supplies & Traps: Engineered Brass CO., Mcguire, Charlotte Pipe, Brasscraft, IPS, Watts, Zurn
Floor Drains & Cleanouts: Zurn, Jay R Smith, Proset, Watts, Mifab, Wade, Josam, Sioux Chief, Oatey
Tankless Electric Water Heaters: A.O. Smith, Rheem, EEmax, Chronomite
Wall Hydrants/ Hose Bibbs: MIFAB, Jay R. Smith, Wade, Watts, Woodford, Zurn
CPVC Valves: American, NIBCO, Spears
Mop Sinks: Stern Williams, Acorn, Fiat
Wash Fountains: Acorn, Willoughby, Bradley
Eyewash: Stingray, Guardian, Acorn, Bradley, Haws, Speakman

FIXTURE AND EQUIPMENT SCHEDULE

#	FIXTURE TYPE	WASTE		WATER SUPPLY		WATER FIX. CONN.		MODEL NUMBER
		BELOW FLOOR	FIXTURE CONN.	COLD	HOT	COLD	HOT	
ESS	COMBINATION DRENCH SHOWER AND EYE/FACE WASH				1-1/4"		1-1/4"	ULINE H-10735
NFWH1	BACKFLOW PROTECTED AUTOMATIC DRAINING FREEZELESS HOSE BIBB			3/4"		3/4"		PRIER C-634
NFWH2	BACKFLOW PROTECTED AUTOMATIC DRAINING FREEZELESS HOSE BIBB				3/4"		3/4"	PRIER C-634
RPZ	REDUCED PRESSURE ZONE ASSEMBLIES			SEE DWGS.		SEE DWGS.		WATTS LF009.
FD	FLOOR DRAIN WITH WATERLESS TRAP PRIMER	SEE DWGS	SEE DWGS					ZURN Z730
GCO	GRADE CLEANOUT	SEE DWGS	SEE DWGS					WATTS CO-200-RX-4-60.
MOP	MOLDED HIGH-DENSITY COMPOSITE BASIN							PFMB2424

CONTRACTOR SHALL COORDINATE WITH CIVIL SHEET C9.2 & C9.1 AND ARCHITECT BEFORE ORDERING FIXTURES

WATER HEATER SCHEDULE

MARK	MANUFACTURER	MODEL NUMBER	TYPE	TURN ON (GPM)	KW	PHASE	VOLTAGE
WH	EEMAX	PRO SERIES XTP054480	TANKLESS ELECTRIC	0.5	54.0	3	480

NOTE: PROVIDE CORROSION RESISTANCE N4X6 CABINET

LEGEND

—⋈—	BALL VALVE	— — —	COLD WATER
—⋈—	CHECK VALVE	— - - - —	HOT WATER
—○—	PIPE UP	———	SEWER
—⊖—	PIPE DOWN	CW	COLD WATER
F.F.E.	FINISHED FLOOR ELEVATION	HW	HOT WATER
(TYP)	TYPICAL	—▽—	STRAINER
N.T.S.	NOT TO SCALE	PDI-B(H)	PDI UNIT WATER HAMMER ARRESTOR

TOTAL ENGINEERS
169 New Street, Macon, GA 31201
(478)741-4632 - T.E. project # 25-101
www.totalengineers.com
GA COA NO # PEF009195 EXP: 06/30/2026

ESG ENGINEERING

GROUNDWATER WELLS #4 & #5

FOR THE
CITY OF FLOWERY BRANCH

REVISIONS

NO.	DESCRIPTION	DATE
2	ADDENDUM 2	

CONFORMED SET

GEORGIA REGISTERED PROFESSIONAL ENGINEER KRUNAL M PATEL

DRAWN BY: KMP
CHECKED BY: KMP
DATE:
SCALE:

CONTENT:

PLUMBING SCHEDULES & SPECIFICATIONS

SHEET NO:

P0.1

Last Saved By: Owner
Plotted: 12/12/2025 10:41 AM
Drawing Path: Z:\2025\101 Well Project Chem Feed Building\Flowery Branch, GA\DRAWINGS\TE\25-101 PLUMBING.dwg

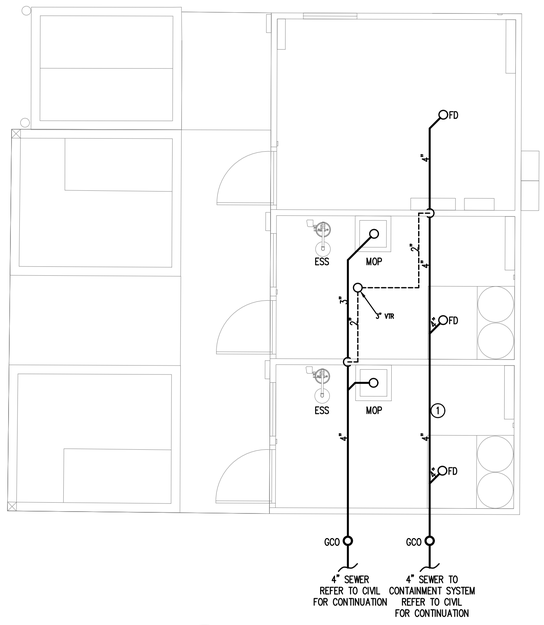

1 PLUMBING PLAN - SEWER
SCALE: 1/4"=1'-0"

KEY NOTES(THIS SHEET ONLY):

1. CONTRACTOR SHALL AVOID ALL HELICAL PILES AND FOOTERS FOR UNDERGROUND PLUMBING. TYPICAL FOR ALL UNDERGROUND PLUMBING.
2. DOMESTIC WATER LINES SHALL BE AFFIXED TO WALL OR HUNG FROM CEILING. TYPICAL FOR ALL PLUMBING PIPES.

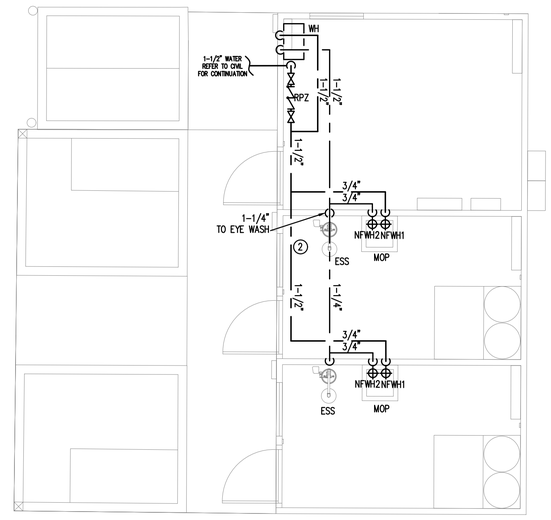

2 PLUMBING PLAN - WATER
SCALE: 1/4"=1'-0"

TOTAL ENGINEERS
169 New Street, Macon, GA 31201
(478)741-4632 - T.E. project # 25-101
www.totalengineers.com
GA COA NO # PEF009195 EXP: 06/30/2026

ESG ENGINEERING

GROUNDWATER WELLS #4 & #5

FOR THE
CITY OF FLOWERY BRANCH

REVISIONS

NO.	DESCRIPTION	DATE
2	ADDENDUM 2	

CONFORMED SET

GEORGIA REGISTERED PROFESSIONAL ENGINEER KRUNAL M PATEL

DRAWN BY: KMP
CHECKED BY: KMP
DATE:
SCALE:

CONTENT:

PLUMBING PLANS

SHEET NO:

P1.0

Last Saved By: Owner
Plotted: 12/12/2025 10:41 AM
Drawing Path: Z:\2025\101 Well Project Chem Feed Building Flowery Branch, GA\DRAWINGS\TE\25-101 PLUMBING.dwg

ADDENDUM #1
December 9, 2025

PROJECT: ***Groundwater Wells #4 & #5***

OWNER: City of Flowery Branch

BID DATE: Thursday, December 18, 2025 at 2:00 P.M.

The Bidder is hereby provided the following information:

1. **MISCELLANOUS INFORMATION**

   a. The City will require a Building Permit to be filed/applied for and obtained prior to beginning work on the chemical feed building structure. The Contractor shall be responsible for all coordinating/administration/overhead required to conduct such work. All costs associated with such work should be included under the line item of the Contractor's choosing in the Bid Form.

   b. Henderson Well pump to be Grundfos 300S250-6 (Product Name), 14B73506 (Product #), 3" NPT discharge, 6" Motor 3x440/460/480 V, 60 Hz.

2. **CONTRACT DOCUMENTS, SECTION 00410 – BID FORM**

   a. A new Bid Form has been issued – see attached.

3. **TECHNICAL SPECIFICATIONS, SECTION 01020 – ALLOWANCES**

   a. A new Section 01020 – Allowances has been issued – see attached.

4. **TECHNICAL SPECIFICATIONS, SECTION 01025 – MEASUREMENT & PAYMENT**

   a. A new Section 01025 – Measurement & Payment has been issued – see attached.

5. **REVISED CONSTRUCTION PLANS (SEE ATTACHED)**

   a. C0.0 – Cover Sheet
   b. C0.1 – General Notes
   c. C1.0 – Existing Conditions & Demolition Plan
   d. C2.0 – Site Plan
   e. C2.1 – Building Piping Plan

f. C2.2 – Building Detail Plan
g. C3.0 – Grading Plan
h. C4.0 – Utility Plan
i. C4.1 – Water Main Extension Plan
j. C5.0 & C5.2 – Building Sections
k. C5.3 – Utility Profile
l. C6.0 – Hydrology Plan
m. C7.0 & C7.1 – ESC Details
n. C8.0 – C8.5 – ESC Plan Sheets
o. C9.3 – Construction Details

6. CONSTRUCTION PLANS, SHEET L1.0

a. A Landscaping Plan sheet has been added – see attached.

7. CONSTRUCTION PLANS, SHEET S1

a. A Structural Plan sheet has been added – see attached.

b. Contractor shall include all costs associated with construction of the building foundation under the line item in the Bid Form for "Groundwater Wells #4 & #5 Improvements Complete", including but not limited to concrete/steel reinforcement work, grade beams, procuring helical pile engineer & obtaining stamped pile design drawings, helical pile foundation installation/construction, and all other work required for a complete and functional project as shown and described in the Construction Plans, Specifications, and Addenda.

All bidders shall acknowledge receipt of all addenda issued where indicated on the bid sheets. (Section 00410 – Bid Form, Page 2)

ATTENTION

ALL BIDDERS SHALL ACKNOWLEDGE RECEIPT OF ALL ADDENDA ISSUED WHERE INDICATED ON THE BID SHEETS. (SECTION 00410 – BID FORM, PAGE 2)

BIDDERS ARE MADE AWARE THAT IT IS THEIR RESPONSIBILITY TO VERIFY THAT ANY AND ALL ADDENDA HAVE BEEN RECEIVED PRIOR TO THE SUBMISSION OF THEIR BID. IN THE EVENT ANY BIDDER FAILS TO ACKNOWLEDGE RECEIPT OF ANY SUCH ADDENDA IN THE SPACE PROVIDED ON THE BID FORM, THEIR BID WILL BE CONSIDERED NONRESPONSIVE.

END ADDENDUM

SECTION 00410
BID FORM

PROJECT IDENTIFICATION:

Groundwater Wells #4 & #5

CONTRACT IDENTIFICATION AND NUMBER:

F0002.018

THIS BID IS SUBMITTED TO:

City of Flowery Branch
5410 Pine Street
Flowery Branch, GA 30542

THIS BID IS SUBMITTED FROM:

Bidder: _____

Address: _____

_____

Phone: _____

State of Georgia Business License No.: _____

1. The undersigned Bidder proposes and agrees, if this Bid is accepted, to enter into an agreement with Owner in the form included in the Contract Documents to perform and furnish all Work as specified or indicated in the Contract Documents for the Contract Price and within the Contract Time indicated in this Bid and in accordance with the other terms and conditions of the Contract Documents.

2. Bidder accepts all of the terms and conditions of the Advertisement or Invitation to Bid and Instructions to Bidders, including without limitation those dealing with the disposition of Bid security. This Bid will remain subject to acceptance for 60 days after the day of Bid opening. Bidder will sign and submit the Agreement with the Bonds and other documents required by the Bidding Requirements within fifteen days after the date of Owner's Notice of Award.

3. In submitting this Bid, Bidder represents, as more fully set forth in the Agreement, that:

(a) Bidder has examined copies of all the Bidding Documents and of the following Addenda (receipt of all which is hereby acknowledged):

Date	Addendum Number

(b) Bidder has familiarized itself with the nature and extent of the Contract Documents, Work, site, locality, and all local conditions and Laws and Regulations that in any manner may affect cost, progress, performance or furnishing of the Work.

(c) Bidder has studied carefully all reports and drawings of subsurface conditions and drawings of physical conditions which are identified in the Supplementary Conditions as provided in Paragraph 4.2 of the General Conditions, and accepts the determination set forth in Paragraph 4.2.1 of the Supplementary Conditions of the extent of the technical data contained in such reports and drawings upon which Bidder is entitled to rely.

(d) Bidder has obtained and carefully studied (or assumes responsibility for obtaining and carefully studying) all such examinations, investigations, explorations, tests and studies (in addition to or to supplement those referred to in (c) above) which pertain to the subsurface or physical conditions at the site or otherwise may affect the cost, progress, performance or furnishing of the Work as Bidder considers necessary for the performance or furnishing of the Work at the Contract Price, within the Contract Time and in accordance with the other terms and conditions of the Contract Documents, including specifically the provisions of Paragraph 4.2 of the General Conditions; and no additional examinations, investigations, explorations, tests, reports or similar information or data are or will be required by Bidder for such purposes.

(e) Bidder has reviewed and checked all information and data shown or indicated on the Contract Documents with respect to existing Underground Facilities at or contiguous to the site and assumes responsibility for the accurate location of

said Underground Facilities. No additional examinations, investigations, explorations, tests, reports or similar information or data in respect of said Underground Facilities are or will be required by Bidder in order to perform and furnish the Work at the Contract Price, within the Contract Time and in accordance with the other terms and conditions of the Contract Documents, including specifically the provisions of Paragraph 4.3 of the General Conditions.

(f) Bidder has correlated the results of all such observations, examinations, investigations, explorations, tests, reports and studies with the terms and conditions of the Contract Documents.

Bidder has given Engineer written notice of all conflicts, errors or discrepancies that it has discovered in the Contract Documents and the written resolution thereof by Engineer is acceptable to Bidder.

(g) This Bid is genuine and not made in the interest of or on behalf of any undisclosed person, firm or corporation and is not submitted in conformity with an agreement or rules of any group, association, organization or corporation; Bidder has not directly or indirectly induced or solicited any other corporation to refrain from bidding; and Bidder has not sought by collusion to obtain for itself any advantage over any other Bidder or over Owner.

(h) Bidder agrees to commence work under this Agreement on or before a date to be specified in a written "Notice to Proceed" of the Owner.

(i) Bidder accepts the provisions of the Agreement as to liquidated damages in the event of failure to complete the Work on time.

4. Bidder will complete the Work in accordance with the Contract Documents for the following price(s):

The Contractor is directed to Section 01025 “Measurement and Payment” for the methods and limits for payment to the Contractor for the pay items listed below:

(A) BASE BID: Groundwater Wells #4 & #5

BID FORM BEGINS ON PAGE 4

BID FORM					
ITEM NO	QTY	UNIT	DESCRIPTION	UNIT PRICE	TOTAL PRICE
1	80	CY	Rock Removal - Base	$ 75.00	$ 6,000.00
2	80	CY	Rock Removal - Premium		
3	1	LS	Clearing & Grubbing		
4	1	LS	Demolition		
5	1	LS	Groundwater Wells #4 & #5 Improvements Complete (see Section 01025 for limits and extents of payment under this line item)		
6	1	LS	Diesel Generator Installation		
7	1	EA	3-Way Fire Hydrant Assembly		
8	1	EA	8” Gate Valve w/ Box & Cover		
9	50	LF	4" RJ DIP Water Main - Open Cut		
10	70	LF	4" RJ DIP Water Main - Horizontal Directional Drill		
11	1,580	LF	8" RJ DIP Water Main - Open Cut Cross-Country		
12	45	LF	8" RJ DIP Water Main - Open Cut Roads		
13	145	LF	8" DR-11 (DIPS) HDPE Water Main - Horizontal Directional Drill		
14	1	EA	2" Tapping Sleeve & Valve (incl. Valve Box & Cover)		
15	1	EA	6" Tapping Sleeve & Valve (incl. Valve Box & Cover)		
16	1	EA	Cut, Cap, & Abandon Ex. 2" Water Line		
17	5	EA	Longside Water Service Transfer		
18	1	LS	Traffic Control		
19	1	LS	Erosion & Sediment Control Complete		
20	1	LS	Landscaping Complete		

21	1	LS	Electrical Service Allowance	$ 40,000.00	$ 40,000.00
22	1	LS	Groundwater Wells #4 & #5 Rehabilitation Allowance	$ 115,000.00	$ 115,000.00
23	1	LS	Supplemental Work Allowance (SWA)	$ 100,000.00	$ 100,000.00
				TOTAL BASE BID AMOUNT:	

Bidder agrees to furnish all labor, materials, and equipment necessary to construct the **Groundwater Wells #4 & #5** for the City of Flowery Branch for the sum of

_____Dollars

($_____).

6. Bidder agrees that the Work will be substantially complete and ready for final payment in accordance with the completion time/dates provided in the Contract and any Addenda.

7. Bidder accepts the provisions of the Agreement as to liquidated damages in the event of failure to complete the Work within the times specified in the Agreement.

8. The following documents are attached to and made a condition of this Bid:
   a. Required Bid Security in the form of 5% of the Bid Total Price.

9. The undersigned further agrees that in case of failure on his part to execute the said contract and the Bond within fifteen (15) consecutive calendar days after written notice being given of the award of the contract, the check or bid bond accompanying this bid, and the monies payable thereon shall be paid into the funds of the Owner as liquidated damages for such failure, otherwise, the check or bid bond accompanying this proposal shall be returned to the undersigned.

10. Communications concerning this Bid shall be addressed to:
    ESG Engineering, LLC
    6400 Peake Rd
    Macon, GA 31210
    Attn: Rachael Crowell
    rcrowell@esgengineering.com

11. Terms used in this Bid which are defined in the General Conditions or Instructions to Bidders will have the meanings indicated in the General Conditions or Instructions to Bidders.

SUBMITTED on _____, 20____.

BIDDER: _____

BY: _____

TITLE: _____

STATE CONTRACTOR
LICENSE NO. _____

ADDRESS: _____

_____

_____

PHONE: _____

Seal: (if bid by a Corporation)

END OF SECTION

SECTION 01020
ALLOWANCES

PART 1 – GENERAL

A. The Contractor shall include in his bid proposal the allowances stated herein. The final amount of any allowance item listed herein shall be adjusted accordingly by change order to reflect actual cost.

PART 2 – PRODUCTS

A. The Contractor shall allow the sum indicated in the Bid Form for Supplemental Work Allowance (SWA). SWA shall be utilized to incorporate cost changes for any additional authorized work into the scope of work up to the amount in the Bid Form. Contract change orders shall be enforced for contract changes over and above this amount. These SWA's shall authorize the Contractor to perform additions to the work, but the Contractor shall perform no work until written authorization has been delivered to the Contractor by the Owner/Engineer. Contractor should not expect that any SWA's will be issued; SWA's shall be issued at the discretion of the Owner only.

The value of any work covered by a SWA shall be determined in one of the following ways:

1. Where the work involved is covered by unit prices contained in the Contract Documents, by application of unit prices to the quantities of the item involved (subject to the provisions of the General Conditions).

2. By mutual acceptance of a lump sum by Contractor and the Owner.

3. On the basis of the cost of the work plus a Contractor's Fee for overhead and profit. This basis shall be as established for Change Orders in General Conditions.

B. The Contractor shall allow the sum indicated in the Bid Form for Electrical Service Allowance. The Electrical Service Allowance shall be utilized to reflect the actual cost of installation/establishment of utility power at the site, including any fees associated with establishing service. Georgia Power will be responsible for bringing power to the site and establishing a metered service. Should the Contractor require any overhead or profit for allowing such a sum within his/her bid, that amount should be added into the line item of their choosing. Any additional cost associated with coordinating the work with Georgia Power shall be included under the line item

of the Contractor's choosing.

C. The Contractor shall allow the sum indicated in the Bid Form for Groundwater Wells #4 & #5 Rehabilitation Allowance. The Groundwater Wells #4 & #5 Rehabilitation Allowance shall be utilized to engage the services of a hydrogeologist to provide testing oversight/inspection and to prepare and submit final water quality/pump test report for each well; allowance shall also be used to engage a laboratory and sub-contractor(s) in conjunction with hydrogeologist to provide sediment removal, air burst cleaning, post-cleaning CCTV, 72-hr pump test, data reporting/record keeping, water quality laboratory testing, and all associated and ancillary work required per Spec. Section 80001. Should the Contractor require any overhead or profit for allowing such a sum within his/her bid, that amount should be added into the line item of their choosing. Any additional cost associated with coordinating the work shall be included under the line item of the Contractor's choosing.

PART 3 – EXECUTION

A. Amounts stated shall include all taxes, coordination and handling that may be required to provide the equipment to the owner. Owner may choose to delay the purchase of equipment to the end of the Contract.

END OF SECTION

SECTION 01025
MEASUREMENT AND PAYMENT

PART 1 – GENERAL

1.01 SCOPE OF WORK

A. This Section describes the methods by which measurement will be made of the quantities for which payment will be made for the Project.

B. The Bid lists each item of the Project for which payment will be made. No payment will be made for any items other than those listed in the Bid.

C. Required items of work and incidentals necessary for the satisfactory completion of the work which are not specifically listed in the Bid, and which are not specified in this Section to be measured or to be included in one of the items listed in the Bid, shall be considered as incidental to the work and whose cost shall be included in the item of the Bidder's choice. All costs thereof, including Contractor's overhead costs and profit, shall be considered as included in the lump sum or unit prices bid for the various Bid items. The Contractor shall prepare the Bid accordingly.

D. Work includes furnishing all labor, equipment, tools and materials, which are not furnished by the Owner and performing all operations required to complete the work satisfactorily, in place, as specified and as indicated on the Drawings.

1.02 MEASUREMENT OF WORK

A. Measurement methods delineated in the individual specification sections complement the criteria of this section. In the event of conflict, the requirements of the individual specification section govern.

B. Work shall be measured by the Engineer or his representative with assistance from the Contractor prior to preparation of a payment request by the Contractor.

C. Unit quantities that are measured in place shall be measured as they are placed. The Contractor shall give the Engineer a minimum of two days' notice for making all required measurements.

D. Materials that must be measured as delivered shall be measured at the time of delivery by the Engineer or his representative; the Contractor shall provide sufficient advance notice so that such measurements can be made.

E. Work necessary for a complete and operational job, such as relocation of mailboxes

or fences, removal of trees, relocation of utilities, graveling / maintaining driveways and driving lanes, field engineering, clearing and grubbing, traffic control, etc., not specifically identified as a pay item shall be included in the unit price bid of the Bidder's choosing. No additional payments will be made for such activities.

1.03 ESTIMATED QUANTITIES

All estimated quantities for unit price items, stipulated in the BID FORM, or other Contract Documents, are approximate and are to be used as a basis for comparing the bids submitted for the Project. The actual amounts of work done and materials furnished under unit price items may differ from the estimated quantities. The basis of payment for work and materials will be the actual amount of work done and materials furnished. The Contractor agrees to make no claim for damages, anticipated profits or otherwise on account of any difference between the amounts of work actually furnished and the estimated amounts included in the BID FORM. The Contractor will not be paid for any work which exceeds the quantity set forth in the BID FORM without a change order issued before the work is performed unless specifically ordered in writing by the Engineer. The Contractor will provide assistance to the Engineer to check quantities and elevations when so requested.

1.04 MEASUREMENT OF QUANTITIES

A. Measurement by Weight – Concrete reinforcing steel, rolled or formed steel or other metal shapes will be measured by handbook weights. Welded assemblies will be measured by handbook or scale weight.

B. Measurement by Volume – Measured by cubic dimension using mean length, width and height or thickness.

C. Measurement by Area – Measured by square dimension using mean length and width or radius.

D. Linear Measurement – Measured by linear dimension, at the item centerline or mean chord.

E. Stipulated Sum/Price Measurement – Items measured by weight, volume, area, or linear means or combination, as appropriate, as a completed item or unit of the Work.

1.05 PROGRESS PAYMENTS

A. Progress payments shall be based on percentage of work complete for lump sum pay items and units installed for unit price pay items.

B. All items of Work not specifically listed in the Bid Schedule shall be considered incidental to the construction, and the cost of all such work and material shall be

included in the item of the Contractors choice.

C. All items listed for measurement and payment shall include all materials, labor, and equipment necessary to successfully and satisfactorily complete Work specified.

D. Payment – The Contractor will receive payment only for the items listed in the Bid Schedule of his contract, and no separate payments will be made for the work under any section of the Contract Documents except as provided for in the Bid Form. Where measurements are required to be made by the Engineer, for the payment of a pay item, the failure of the Contractor to give the adequate notification or failure of the Contractor to give the engineer assistance for the measurement shall result in the forfeiture of payment for the work or item which was not measured.

PART 2 – PRODUCTS

2.01 STORED MATERIALS

A. Partial payment shall be made for approved materials stored at the project site, provided invoices for said materials are furnished in accordance with payment request submittal and shop drawings for said materials have been approved.

PART 3 – EXECUTION

3.01 CLEARING & GRUBBING

A. Measurement: Measurement for Clearing & Grubbing shall be on a lump sum basis and shall include all clearing & grubbing required for the project site, including the wells site & along the proposed water main alignment.

B. Payment: Payment for Clearing & Grubbing shall be on the basis of the lump sum price provided in the BID FORM and includes clearing and grubbing for all areas shown in the plans where the proposed work conflicts with existing vegetation/trees, and includes all trimming, tree removal, clearing, grubbing, root raking, hauling, disposal, and all labor, materials, tools, and equipment required.

3.02 DEMOLITION

A. Measurement: Measurement for Demolition shall be on a lump sum basis.

B. Payment: Payment for Demolition shall be on the basis of the lump sum price provided in the BID FORM and includes the demolition/removal of all existing site features in conflict with the proposed improvements as shown on the Plans, and includes hauling, disposal, and all labor, materials, tools, and equipment required.

3.03 GROUNDWATER WELLS #4 & #5 IMPROVEMENTS COMPLETE

A. Measurement: Measurement for Groundwater Wells #4 & #5 Improvements

Complete shall be on a lump sum basis.

B. Payment: Payment for Groundwater Wells #4 & #5 Improvements Complete shall be on the basis of the lump sum price provided in the BID FORM. Payment shall include all ancillary labor, materials, tools, testing, hauling/transportation, mobilization, and equipment required for a complete and functional project, including but limited to:

- Site grading, including all import fill material and removal, hauling, and disposal of excess materials
- Landscaping
- Gravel access drive & well site pad (incl. Tensar geogrid & GAB)
- Concrete sidewalk/walking areas and external chemical storage areas
- Protective bollards
- Yard hydrant installation (incl. all valves, fittings, etc.)
- Asphalt parking area (incl. Tensar geogrid & GAB)
- Chain link security fencing & gates
- Two (2) Groundwater Wells construction
    - Grundfos submersible pumps
    - Cables, supports, brackets, centralizers, hardware, etc.
    - Electrical & controls improvements
    - Discharge piping, fittings, transitions/connections, valves, & well casing pipe
    - Pressure gauges
    - Well pump enclosures
    - Support slabs (incl. reinforcement, concrete, Tensar geogrid, & crushed stone)
    - All other ancillary and miscellaneous work required to install the groundwater wells in accordance with the Construction Plans and Spec. Sections 432133 & 02514
- Chemical feed building
    - Building foundation
        - Foundation installation per Structural plan
        - Pile design & stamped drawing per helical pile engineer
        - Helical pile installation
    - Prefabricated concrete structure installed per drawings
    - Interior & exterior wall and floor coating system per construction drawings
    - All Mechanical/HVAC improvements shown on the mechanical plan
    - All Electrical improvements (incl. wiring, conduits, equipment, etc.)
    - All interior/exterior lighting improvements
    - Domestic water service tap w/ meter, backflow preventer, & box

    - All plumbing fixtures/appurtenances/piping/fittings as shown in the plumbing plans
    - Discharge piping pressure gauge
    - Chemical feed system for fluoride & chlorine
        - Eight (8) Grundfos chemical feed pumps per Spec. Section 70001
        - Feed line tubing/piping, valves, fittings, saddle taps, injection quills, hardware, etc. per Section 70001
        - Raceway/chase box installation
    - Building sewer lines, cleanouts, and connection to existing san. sewer main
    - Chemical containment pallets & ramps
    - Ultrasonic flow meters
    - Flanged DI piping, fittings, & valves
    - Pipe supports
    - All pipe/conduit cores/penetrations (incl. coring, link seals, & grouting)
    - Gutters & downspouts
    - All other ancillary and miscellaneous work required to install the chemical feed building in accordance with Spec. Section 02513 & the applicable drawings
- Covered steel structure
    - Stamped engineering design plans and applicable fees
    - Foundation/footers per detail & note on Sheet C9.4
    - Steel structure/shelter installed per detail drawings
    - Gutters & downspouts
    - All other ancillary and miscellaneous work required to install the steel structure in accordance with Section 90001 and the applicable drawings (provided by Renegade)
- Isolated chemical spill containment system (incl. floor drains, piping, fittings, precast structures, and coatings/linings)
- All restrained joint & flanged ductile iron yard piping, fittings, & valves located up to and including the 8”x6” reducer located outside of the backflow vault (see Sheets C4.0 & C4.1)
- Riser blowoff/sampling piping
    - Tapping saddle, spigot, fittings/adaptors, etc.
    - Insulated enclosure
    - Crusher run bedding
- Exterior pipe insulation system
- All pipe coating/lining and painting
- Backflow installation
    - Double Check Detector Assembly (DCDA)
    - Pressure gauge

    - Pipe supports & blocking
    - Precast concrete vault
    - Access hatch
    - Ladder
    - Stone bedding & Tensar geogrid
    - Pipe, fittings, and valves (incl. coring, link seals, & grouting)
    - Drainage piping
- Electrical/Controls & SCADA improvements, implementation, and ancillary items not furnished & installed by the utility provider (GA Power)
- All other ancillary and miscellaneous items required to provide a complete and functional project as shown and described in the Construction Plans, Details, and Specifications.

3.04 DIESEL GENERATOR INSTALLATION

A. Measurement: Measurement for Diesel Generator Installation shall be on a lump sum basis.

B. Payment: Payment for Diesel Generator Installation shall be on the basis of the lump sum price provided in the BID FORM and shall include the cost of the generator, concrete support slab, steel reinforcement, Tensar geogrid, crushed stone, grading of local area, all required electrical work/connections, transfer switch integration and all labor, materials, tools, testing, and hauling/freight required for a complete and functional installation.

3.05 FIRE HYDRANT ASSEMBLY

A. Measurement: Measurement for Fire Hydrant Assembly shall be based on the number of fire hydrants that are installed.

B. Payment: Payment for Fire Hydrant Assembly shall be on the basis of the unit price provided in the BID FORM and shall include the cost of excavation, bedding, backfill, restrained hydrant tee, restrained hydrant lead pipe, 3-way fire hydrant, fittings/couplings, restraint/blocking, and all labor, materials, tools, testing, and hauling/freight required for a complete and functional installation.

3.06 GATE VALVE

A. Measurement: Measurement for Gate Valve shall be based on the number of valves that are installed.

B. Payment: Payment for Gate Valve shall be on the basis of the unit price provided in the BID FORM for valves of various sizes and shall include the cost of the gate valve, box, stem, cover, and all labor, materials, tools, testing, freight/hauling, and

equipment required to install the gate valves where shown in the plans.

3.07 WATER MAIN – OPEN CUT

A. Measurement: Measurement for Water Main – Open Cut shall be on a per linear foot basis.

B. Payment: Payment for Water Main – Open Cut shall be on the basis of the unit price provided in the BID FORM and shall include the cost of pipe of various materials and sizes, excavation, bedding, & backfill, all adaptors/transitions/couplings, thrust blocking, restrained joint glands/gaskets, fittings (bends, tees, crosses, reducers, etc.), **connecting to existing water lines (where applicable)**, pipe cutting, and all freight/hauling, labor, materials, tools, testing, and equipment required.

3.08 WATER MAIN – HORIZONTAL DIRECTIONAL DRILL

A. Measurement: Measurement for Water Main – Horizontal Directional Drill shall be on a per linear foot basis.

B. Payment: Payment for Water Main – Horizontal Directional Drill shall be on the basis of the unit price provided in the BID FORM and shall include the cost of various sizes and materials of pipe, excavation, bedding, & backfill, pipe cutting, fusing/welding, directional drill operation, drilling fluid, excavation of launching & receiving pits, and all freight/hauling, labor, materials, tools, testing, and equipment required.

3.09 WATER MAIN – OPEN CUT ROADS

A. Measurement: Measurement for Water Main – Open Cut Roads shall be on a per linear foot basis.

B. Payment: Payment for Water Main – Open Cut Roads shall be on the basis of the unit price provided in the BID FORM and shall include the cost of pipe of various materials and sizes, excavation, bedding, & backfill, Class “A” concrete, asphalt surface course, all adaptors/transitions/couplings, thrust blocking, restrained joint glands/gaskets, fittings (bends, tees, crosses, reducers, etc.), connecting to existing water lines, pipe cutting, and all freight/hauling, labor, materials, tools, testing, and equipment required.

3.10 TAPPING SLEEVE & VALVE INSTALLATION

A. Measurement: Measurement for Tapping Sleeve & Valve Installation shall be based on the number of hot-tap connections made to existing water lines/mains.

B. Payment: Payment for Tapping Sleeve & Valve Installation shall be on the basis of the unit price provided in the BID FORM and shall include the cost of the tapping sleeve & valve assembly of various sizes, tapping/connecting to existing water mains, valve riser & box/cover, and all freight/hauling, labor, materials,

tools, testing, and equipment required.

3.11 CUT, CAP, & ABANDON WATER LINES

A. Measurement: Measurement for Cut, Cap, & Abandon Water Lines shall be on a per each basis.

B. Payment: Payment for Cut, Cap, & Abandon Water Lines shall be on the basis of the unit price provided in the BID FORM and shall include the cost of all excavations, isolating lines, pipe cutting, installation of two (2) ductile iron caps, backfill, and all freight/hauling, labor, materials, tools, testing, and equipment required.

3.12 WATER SERVICE TRANSFER

A. Measurement: Measurement for Water Service Transfer shall be on a per each basis.

B. Payment: Payment for Water Service Transfer shall be on the basis of the unit price provided in the BID FORM and shall include the cost of disconnecting the existing pipe, tapping saddle, corporation stop, installing new piping/tubing to match existing size, directional drill operation (if required), couplings/adapters, and all labor, materials, tools, testing, freight/hauling, and equipment required to transfer existing water service lines to the new main.

3.13 TRAFFIC CONTROL

A. Measurement: Measurement for Traffic Control shall be on a lump sum basis for the entire project, including the wells site and along the proposed water main alignment shown in the BID FORM.

B. Payment: Payment for Traffic Control shall be at the lump sum price provided in the BID FORM and shall include all traffic control operations, labor, materials, signage, procedures, devices, and equipment required to adhere to the latest MUTCD, GDOT, and local standards and recommendations throughout construction.

3.14 EROSION CONTROL

A. Measurement: Measurement for Erosion Control shall be on a lump sum basis for the entire project, including at the wells site and along the proposed water main alignment.

B. Payment: Payment for Erosion Control shall be on the basis of the lump sum price provided in the BID FORM and shall include all NPDES permitting, NOI filing,

inspection, sampling, record keeping, reporting, ES&PC signage, silt fence, check dams, temporary & permanent grassing, NOT filing, and all labor, materials, tools, testing, freight/hauling, and equipment required.

3.15 LANDSCAPING COMPLETE

A. Measurement: Measurement for Landscaping Complete shall be on a lump sum basis.

B. Payment: Payment for Landscaping Complete shall be on the basis of the lump sum price provided in the BID FORM and shall include the cost of providing and installing landscaping trees/shrubbery in accordance with the landscaping plan, as well as replacing/relocating any disturbed landscaping and landscaping features for the entire project site, including fencing, shrubbery, trees, planter beds, irrigation systems, specific grassing, planter beds, and all labor, materials, tools, testing, freight/hauling, and equipment required.

END OF SECTION

GROUNDWATER WELLS #4 & #5

FOR THE

CITY OF FLOWERY BRANCH

HALL COUNTY, GA

DECEMBER 2025

F0002.018

CITY COUNCIL

OLIVER McCLELLAN	MAYOR
CHRIS MUNDY	POST 1 COUNCIL MEMBER
JOSEPH MEZZANOTTE	POST 2 COUNCIL MEMBER
WILLIAM McDANIEL	POST 3 COUNCIL MEMBER
CHARLES VANDERBILT	POST 4 COUNCIL MEMBER
PETER LENA	POST 5 COUNCIL MEMBER
TONYA PARRISH	CITY MANAGER

EST 1874 FLOWERY BRANCH *Always Blooming!*

PROJECT CONTACTS:

1. OWNER / DEVELOPER:
   CITY OF FLOWERY BRANCH
   5410 PINE STREET
   FLOWERY BRANCH, GEORGIA 30542
   PHONE: 770-967-6371

2. PROJECT MANAGER:
   ANDREW SWICEGOOD, PE
   ESG ENGINEERING, LLC
   6400 PEAKE ROAD
   MACON, GEORGIA 31210
   PHONE: 478-718-4426
   ANDREW.SWICEGOOD@ESGENGINEERING.COM

3. 24-HOUR EROSION, SEDIMENTATION, & POLLUTION CONTROL CONTACT:
   TREY CRISP
   478-335-4612

I CERTIFY THAT THE PERMITTEE'S EROSION, SEDIMENTATION AND POLLUTION CONTROL PLAN PROVIDES FOR AN APPROPRIATE AND COMPREHENSIVE SYSTEM OF BEST MANAGEMENT PRACTICES REQUIRED BY THE GEORGIA WATER QUALITY CONTROL ACT AND THE DOCUMENT "MANUAL FOR EROSION AND SEDIMENT CONTROL IN GEORGIA" (MANUAL) PUBLISHED BY THE GEORGIA SOIL AND WATER CONSERVATION COMMISSION AS OF JANUARY 1 OF THE YEAR IN WHICH THE LAND-DISTURBING ACTIVITY WAS PERMITTED, PROVIDES FOR THE SAMPLING OF THE RECEIVING WATER(S) OR THE SAMPLING OF THE STORMWATER OUTFALLS AND THAT THE DESIGNED SYSTEM OF BEST MANAGEMENT PRACTICES AND SAMPLING METHODS IS EXPECTED TO MEET THE REQUIREMENTS CONTAINED IN THE GENERAL NPDES PERMIT NO. GAR100001.

I CERTIFY UNDER PENALTY OF LAW THAT THIS PLAN WAS PREPARED AFTER A SITE VISIT TO THE LOCATIONS DESCRIBED HEREIN BY MYSELF OR MY AUTHORIZED AGENT, UNDER MY SUPERVISION.

DELMAR S. CRISP	0000100336	OCTOBER 3, 2025
LEVEL II DESIGN PERSONNEL	LEVEL II CERTIFICATION NO.	DATE

CONSTRUCTION EXIT
LATITUDE - 34° 11' 25.36" N
LONGITUDE - 83° 55' 8.45" W

GSWCC GEORGIA SOIL AND WATER CONSERVATION COMMISSION

Delmas S Crisp III
LEVEL II CERTIFIED DESIGN PROFESSIONAL

CERTIFICATION NUMBER: 0000100336
ISSUED: 11/08/2025 EXPIRES: 11/08/2028

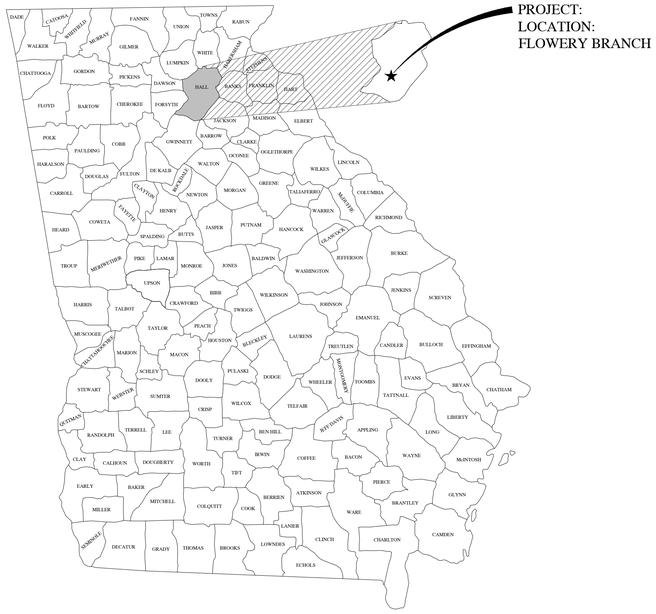

PROJECT LOCATION

INDEX TO DRAWINGS

Sheet List Table	
SHEET NUMBER	SHEET TITLE
C0.0	COVER SHEET
C0.1	GENERAL NOTES
C1.0	EXISTING CONDITIONS & DEMOLTION PLAN
C2.0	SITE PLAN
C2.1	BUILDING PIPING PLAN
C2.2	BUILDING DETAIL PLAN
C3.0	GRADING & DRAINAGE PLAN
C4.0	UTILITY PLAN
C4.1	WATER MAIN EXTENSION PLAN
C5.0 - C5.2	BUILDING ELEVATIONS
C5.3	SANITARY SEWER PROFILES
C6.0	HYDROLOGY PLAN
C7.0 - C7.2	EROSION, SEDIMENTATION, & POLLUTION CONTROL DETAILS
C8.0 - C8.2	EROSION, SEDIMENTATION, & POLLUTION CONTROL PLAN (WELL SITE IMPROVEMENTS)
C8.3 - C8.5	EROSION, SEDIMENTATION, & POLLUTION CONTROL PLAN (WATER MAIN EXTENSION)
C9.0 - C9.5	CONSTRUCTION DETAILS
L1.0	LANDSCAPING PLAN
S1	STRUCTURAL PLAN
MX.X	MECHANICAL PLAN SHEETS (TO BE ISSUED VIA ADDENDUM)
EX.X	ELECTRICAL PLAN SHEETS (TO BE ISSUED VIA ADDENDUM)
PX.X	PLUMBING PLAN SHEETS (TO BE ISSUED VIA ADDENDUM)

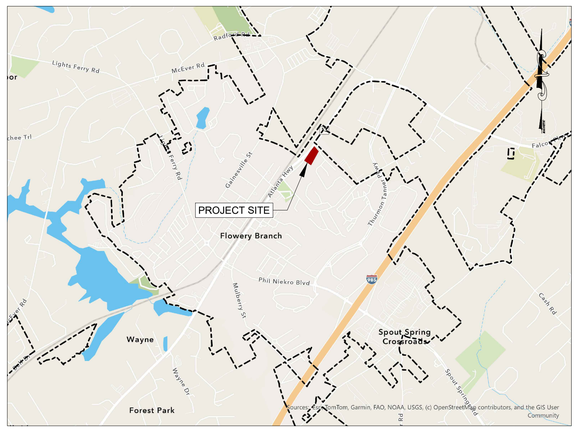

PROJECT VICINITY MAP
N.T.S.

ESG ENGINEERING
6400 Peake Rd
Macon, GA 31210
Ph: (478) 474-4996
Fax: (478) 474-5045

GROUNDWATER WELLS #4 & #5
FOR THE
CITY OF FLOWERY BRANCH

REVISIONS

NO.	DESCRIPTION	DATE
1	ESPC SHEETS	11-7-25
2	BID SET OF PLANS	12-1-25
3	REVISED WITH CITY COMMENTS	12-5-25
4	ADDENDUM #1	12-8-25

BID SET

GEORGIA REGISTERED No. PE046341 PROFESSIONAL ENGINEER ANDREW D SWICEGOOD

DRAWN BY: DSC
CHECKED BY: ADS
DATE: DEC 2025
SCALE: N.T.S.

CONTENT:
COVER SHEET

SHEET NO: 2 3 4
C0.0

UTILITY PROVIDERS	
POWER	CITY OF FLOWERY BRANCH - 770-967-6371
	GEORGIA POWER - 888-660-5890
NATURAL GAS	ATLANTA GAS LIGHT - 800-427-5463
	GAS SOUTH - 877-472-4932
	GEORGIA NATURAL GAS - 800-427-5463
	SCANA ENERGY - 877-467-2262
WATER SERVICE & SANITARY SEWER	CITY OF FLOWERY BRANCH - PETER WOERNER - 706-982-0751
	GAINESVILLE WATER - 770-535-6878
TELECOMMUNICATIONS	EARTHLINK FIBER - 833-906-6020
	AT&T - 877-516-2469
	CHARTER (SPECTRUM) - 770-628-5918
	CENTURY LINK (LUMEN) - 877-453-8353
	COMCAST (XFINITY) - 770-628-5960

PROPOSED LINE LEGEND	PROPOSED SYMBOL LEGEND
PROPERTY LINE	LIGHT POLE / POWER POLE (LP) (PP)
RIGHT-OF-WAY	GAS METER / WATER METER (GM) (WM)
SETBACK / BUFFER	GAS VALVE / WATER VALVE (GV) (WV)
EASEMENT	SANITARY/STORM CLEANOUT (SS CO) (ST CO)
LIMITS OF DISTURBANCE	SANITARY/STORM MANHOLE (SS) (ST)
SURFACE MAJOR CONTOUR	BACK FLOW PREVENTION (RPZ) (DDCV)
SURFACE MINOR CONTOUR	FIRE DEPARTMENT CONNECTION / POST INDICATOR VALVE (FDC) (PIV)
SWALE / DITCH	FIRE HYDRANT / HOSE BIB (HYD) (HB)
SILT FENCE	WELL HEAD (W)
OVERHEAD ELECTRIC	STORM GRATE/COMBO INLET (2'x2') (2'x3')
UNDERGROUND POWER	STORM CURB INLET
NATURAL GAS	FLARED/SAFETY END SECTION
SAN. FORCE MAIN	STRAIGHT/WINGED HEADWALL
SANITARY LATERAL	OUTLET CONTROL STRUCTURE
SAN. SEWER GRAVITY MAIN	
TELECOMMUNICATIONS	
WATER SERVICE	
WATER MAIN	
STORM SEWER	

SITE INFORMATION	
OWNER / DEVELOPER	CITY OF FLOWERY BRANCH 5410 PINE STREET FLOWERY BRANCH, GA, 30542 770-967-6371 EXT. 106 tonya@flowerybranchga.com
PROJECT ADDRESS	4745 ATLANTA HWY FLOWERY BRANCH, GA, 30542
TAX MAP & PARCEL NUMBER	08098 001001 THRU 08098 001004
ZONING / LAND USE	H-B
PROJECT AREA	2.14 ACRES
DISTURBED AREA	0.92 ACRES
BUILDING AREA	400 SQUARE FEET
IMPERVIOUS AREA	0.032 ACRES
PROPOSED USE	GROUNDWATER WELL RESTORATION

2

SITE INFORMATION	
PROJECT ADDRESS	4745 ATLANTA HWY
PARCEL NUMBER	08098 001001 THRU 08098 001004
PARCEL ZONING	H-B
PROJECT AREA	2.14 ACRES
BUILDING SETBACK	
FRONT	NONE
REAR	30'
SIDE	10'
LANDSCAPING BUFFER	
FRONT	10'
REAR	30'
SIDE	NONE

GENERAL NOTES

1. CONTRACTOR SHALL ADHERE TO ALL LOCAL, STATE, AND FEDERAL REGULATIONS.
2. CONTRACTOR SHALL COORDINATE ALL CONSTRUCTION WITH THE OWNER.
3. THE CONTRACTOR SHALL PROVIDE 72 HOUR NOTICE TO THE UTILITIES PROTECTION CENTER PRIOR TO CONSTRUCTION COMMENCEMENT OR EXCAVATION.
4. THE CONTRACTOR IS SPECIFICALLY CAUTIONED THAT THE LOCATIONS AND/OR ELEVATIONS OF EXISTING INFRASTRUCTURE AS SHOWN ON THESE PLANS ARE BASED ON EXISTING RECORDS AND WHERE POSSIBLE, MEASUREMENTS TAKEN IN THE FIELD. THIS INFORMATION IS NOT TO BE RELIED ON AS BEING EXACT OR COMPLETE. IT SHALL BE THE RESPONSIBILITY OF THE CONTRACTOR TO EVALUATE ALL EXISTING INFRASTRUCTURE WHICH MAY CONFLICT WITH THE PROPOSED IMPROVEMENTS SHOWN ON THE PLANS AND COORDINATE WITH THE ENGINEER FOR ADJUSTMENT OF THE WORK AS NECESSARY TO MAINTAIN ADEQUATE SEPARATION SHOULD A CONFLICT ARISE. CONTRACTOR SHALL FIELD-VERIFY (BY POT HOLING) ALL EXISTING UTILITIES PRIOR TO AND DURING CONSTRUCTION.
5. ALL IN-PLACE ITEMS WILL BE PROTECTED BY THE CONTRACTOR DURING CONSTRUCTION. ANY DAMAGES WILL BE REPAIRED TO THE RESPECTIVE OWNER'S SATISFACTION BY THE CONTRACTOR AT HIS/HER EXPENSE. CONTRACTOR SHALL MATCH EXISTING GRASS WHEN REPAIRING DISTURBED AREAS.
6. CONTRACTOR SHALL PROTECT ALL EXISTING UTILITIES. CONTRACTOR SHALL, AT HIS OWN EXPENSE, REPAIR OR REPLACE ANY DAMAGED UTILITIES TO THE RESPECTIVE OWNER'S SATISFACTION.
7. THE CONTRACTOR SHALL BE RESPONSIBLE FOR THE DESIGN, PERMITTING, AND IMPLEMENTATION OF ALL SHEETING, SHORING, BRACING, DE-WATERING, AND SPECIAL EXCAVATION MEASURES REQUIRED TO MEET OSHA, FEDERAL, STATE, AND LOCAL REGULATIONS PURSUANT TO THE INSTALLATION OF THE WORK INDICATED ON THESE DRAWINGS, AS WELL AS SUBSEQUENT WORK AGREED TO BETWEEN THE OWNER AND CONTRACTOR. THE OWNER AND THE DESIGN ENGINEER ACCEPT NO RESPONSIBILITY FOR THE DESIGN(S) TO INSTALL SAID ITEMS.
8. ALL CONSTRUCTION STAKING SHALL BE BY THE CONTRACTOR AT HIS EXPENSE.
9. CONTRACTOR SHALL NOT DISTURB AREAS OUTSIDE OF THE PROJECT SITE/RIGHT OF WAY WITHOUT THE NECESSARY PERMITS/EASEMENTS.
10. EXISTING ROAD SHOULDERS SHALL BE BACKFILLED AND GRASSED. ANY DISTURBED SIDEWALK OR CURB & GUTTER SHALL BE REPAIRED TO MATCH EXISTING.
11. CONTRACTOR SHALL REPLACE ALL DISTURBED TRAFFIC STRIPING, PAVEMENT MARKINGS, MAILBOXES, AND SIGNAGE TO MATCH EXISTING.
12. NO WORK SHALL BEGIN ON THIS PROJECT WITHOUT AT LEAST 24 HOURS ADVANCE NOTIFICATION TO THE OWNER AND THE ENGINEER. IN ADDITION, NO WORK IS TO TAKE PLACE WITHOUT AN APPROVED SET OF PLANS AND SPECIFICATIONS ON THE JOB SITE. WORK IS TO BE COORDINATED WITH ALL OTHER OPERATIONS ACTIVITIES.
13. IT IS THE RESPONSIBILITY OF THE CONTRACTOR TO ENSURE THAT ALL REQUIRED PERMITS ARE OBTAINED AND IN HAND PRIOR TO THE COMMENCEMENT OF CONSTRUCTION.
14. THE CONTRACTOR SHALL BE RESPONSIBLE FOR FURNISHING ALL FILL MATERIAL. FILL MATERIAL SHALL BE CLEAN AND FREE OF ALL DEBRIS AND ORGANIC MATERIAL.
15. THE CONTRACTOR SHALL MAKE HIS OWN DETERMINATION OF ALL SURFACE AND SUBSURFACE CONDITIONS. THE CONTRACTOR WITH CONSULTATION FROM THE ENGINEER SHALL TOGETHER DETERMINE WHAT MATERIAL, IF ANY, IS TO BE WASTED.
16. ALL FIELD CHANGES SHALL BE AUTHORIZED BY THE OWNER IN WRITING IN ADVANCE OF THE WORK. IF CHANGES ARE MADE BY THE CONTRACTOR WITHOUT PRIOR WRITTEN CONSENT FROM THE OWNER, CONTRACTOR SHALL BEAR FULL RESPONSIBILITY FOR MAKING THE NECESSARY CHANGES TO BRING THE CONSTRUCTION INTO CONFORMANCE WITH APPROVED PLANS AND SPECIFICATIONS AT NO COST TO THE OWNER.
17. THE AREAS DISTURBED BY THE CONTRACTOR SHALL BE RESTORED TO THEIR ORIGINAL CONDITION UNLESS OTHERWISE NOTED ON THE PLANS.
18. ALL WATER UTILIZED DURING CONSTRUCTION SHALL BE METERED THROUGH A CONSTRUCTION WATER METER (OBTAINED FROM THE UTILITY OWNER) EQUIPPED WITH AN APPROVED BACKFLOW DEVICE.
19. IT SHALL BE THE RESPONSIBILITY OF THE CONTRACTOR TO FIELD VERIFY ALL PROPOSED CONSTRUCTION FOR FEASIBILITY AND FUNCTION. THE CONTRACTOR SHALL IMMEDIATELY NOTIFY THE ENGINEER OF ANY DISCREPANCIES OR WARRANTED CONCERNS PERTAINING TO DESIGN AND CONSTRUCTION.
20. CONSTRUCTION LAYDOWN AREAS AND STAGING TO BE AT LOCATIONS APPROVED OF BY THE OWNER.
21. THE CONTRACTOR SHALL PLAN, COORDINATE, AND EXECUTE THE WORK SUCH THAT DISRUPTION TO PERSONAL PROPERTY AND BUSINESS IS HELD TO A PRACTICAL MINIMUM.
22. All CONSTRUCTION AREAS ABUTTING LAWNS AND YARDS OF RESIDENTIAL OR COMMERCIAL PROPERTY SHALL BE RESTORED PROMPTLY. BACKFILLING OF UNDERGROUND FACILITIES, DITCHES, AND DISTURBED AREAS SHALL BE ACCOMPLISHED ON A DAILY BASIS.
23. HANDWORK, INCLUDING RAKING AND SMOOTHING, SHALL BE REQUIRED TO ENSURE THAT THE REMOVAL OF ROOTS, STICKS, ROCKS, AND OTHER DEBRIS IS ACCOMPLISHED IN ORDER TO PROVIDE A NEAT AND PLEASING APPEARANCE. GRASSING, WHEN IN SEASON, SHALL IMMEDIATELY FOLLOW IN ORDER TO ESTABLISH PERMANENT COVER AT THE EARLIEST DATE. IF GRASSING IS NOT IN SEASON, PROPER EROSION CONTROL SHALL BE INSTALLED AND MAINTAINED.
24. THE CONTRACTOR SHALL BE ORDERED TO STOP ALL WORK BY THE ENGINEER WHEN RESTORATION AND CLEANUP ARE UNSATISFACTORY, AND TO REQUIRE APPROPRIATE REMEDIAL MEASURES.

AS-BUILT RECORD DRAWINGS

1. AFTER THE FINAL INSPECTION HAS BEEN PERFORMED AND ALL ITEMS ARE SATISFACTORY TO THE CITY, AS-BUILTS SHALL BE SUBMITTED TO THE ENGINEER ALONG WITH A LETTER OF TRANSMITTAL. ACCEPTABLE SUBMITTALS WILL BE APPROVED IN WRITING. SUBMITTALS REQUIRING CORRECTIONS BEFORE BEING ACCEPTABLE WILL BE SO NOTED. AS-BUILTS MUST BE RESUBMITTED FOR REVIEW AND APPROVAL PRIOR TO THE LETTER OF ACCEPTANCE BEING ISSUED BY THE ENGINEER(S).
2. CONTRACTOR SHALL MAINTAIN FIELD "AS-BUILT" DRAWINGS AND SHALL MEASURE AND SHOW LOCATIONS OF ALL PROPOSED INFRASTRUCTURE. AS-BUILT DRAWINGS SHALL PROVIDE RIM AND INVERT ELEVATIONS OF ALL MANHOLES & PIPES.
3. CONTRACTOR SHALL PROVIDE THE ENGINEER WITH DIGITAL AND PAPER AS-BUILT RECORD DRAWINGS OF THE CONSTRUCTED IMPROVEMENTS.

TRAFFIC CONTROL NOTES

1. CONTRACTOR SHALL BE RESPONSIBLE FOR ALL TRAFFIC CONTROL, INCLUDING DEVICES, MATERIALS, PERSONNEL, PROCEDURES, OPERATIONS, AND COORDINATION. ALL TRAFFIC CONTROL SHALL BE IN ACCORDANCE WITH THE *MANUAL OF UNIFORM TRAFFIC CONTROL DEVICES (MUTCD), CURRENT EDITION* AND ALL GDOT AND LOCAL REQUIREMENTS.
2. ACCESS TO ALL ADJACENT PROPERTIES SHALL BE MAINTAINED AT ALL TIMES.
3. CONTRACTOR SHALL NOT LEAVE ANY OPEN TRENCHES OVER NIGHT. ALL TRENCHES SHALL BE BACKFILLED OR PLATED DAILY.

EROSION & SEDIMENTATION CONTROL NOTES

1. ALL EROSION AND SEDIMENT CONTROL MEASURES SHALL BE THE RESPONSIBILITY OF THE CONTRACTOR.
2. CONTRACTOR SHALL HAVE SOIL EROSION CONTROL MEASURES IN PLACE PRIOR TO THE START OF CONSTRUCTION ACTIVITIES.
3. CONTRACTOR SHALL PLACE TEMPORARY AND/OR PERMANENT GRASSING ON ALL DISTURBED PERVIOUS AREAS. CONTRACTOR SHALL INSTALL SINGLE-ROW ("TYPE A") SILT FENCE ALONG THE DOWNSTREAM EDGE OF ALL DISTURBED PERVIOUS AREAS AND INSTALL DOUBLE-ROW ("TYPE C") SILT FENCE ADJACENT TO STREAM BUFFERS. CONTRACTOR SHALL INSTALL CHECK DAMS AT 2' VERTICAL INTERVALS WHERE PROPOSED CONSTRUCTION DISTURBS OR PARALLELS ROADSIDE DRAINAGE DITCHES. 2
4. CONTRACTOR SHALL PROTECT ALL EXISTING & PROPOSED STORM STRUCTURES WITHIN THE PROJECT AREA WITH INLET PROTECTION THROUGHOUT CONSTRUCTION.

PROJECT SITE NOTES:

1. THE EXISTING CONDITIONS SURVEY WAS PROVIDED BY EMC ENGINEERING SERVICES, IMC. AND DATED 03/04/2025.
   A COPY CAN BE PROVIDED UPON WRITTEN REQUEST.
2. REPORTS:
   A. TERRACON PERFORMED A GEOTECHNICAL INVESTIGATION, AND THE SUBSEQUENT REPORT IS PROVIDED IN THE CONSTRUCTION DOCUMENTS AS APPENDIX A.
   B. NO ENVIRONMENTAL ASSESSMENT HAS BEEN PERFORMED FOR THE PROJECT AREA. THE CONTRACTOR SHALL NOTIFY THE ENGINEER WITHIN 24 HOURS OF ANY ENVIRONMENTAL CONCERN ENCOUNTERED WITHIN THE PROJECT AREA.
   C. NO ACM SURVEY HAS BEEN PERFORMED. THE CONTRACTOR SHALL TAKE CARE WHEN HANDLING ANY MATERIAL SUSPECTED TO CONTAIN ASBESTOS. THE CONTRACTOR SHALL PROPERLY DISPOSE OF ALL MATERIAL CONTAINING ASBESTOS.
3. THE PROJECT GENERALLY INCLUDES THE CONSTRUCTION OF A WELL HOUSE BUILDING AND WATER LINE EXTENSION OF TWO PREVIOUSLY OWNED STATE WELLS THAT THE CITY OF FLOWERY BRANCH PURCHASED. THE PROJECT CONSISTS OF MAKING THE WELLS A SUPPORT TO THE CURRENT DRINKING WATER SYSTEM. THE PROJECT WILL INVOLVE TRAFFIC CONTROL, EROSION CONTROL, AND ANY ANCILLARY ITEMS NECESSARY FOR PROJECT COMPLETION. PORTIONS OF THE WORK WILL TAKE PLACE WITHIN GDOT RIGHT-OF-WAY WHERE PERMITS HAVE BEEN APPROVED.
4. THE PROPOSED DEVELOPMENTS ARE LOCATED AT THE INTERSECTION OF: 4745 ATLANTA HIGHWAY AT THE NORTH END OF E RAILROAD AVENUE INTERSECTION.
5. HORIZONTAL DATA SHOWN HEREON IS BASED ON NAD83 GEORGIA STATE PLANES, WEST ZONE, US FOOT. VERTICAL DATA SHOWN HEREON IS BASED ON NAVD88 (1988).
6. THE TOTAL PROJECT SITE FOR THE MULTI-USE FACILITY IS 2.14 ACRES WITH A DISTURBED AREA OF 0.92 ACRES.
7. WETLANDS HAVE BEEN IDENTIFIED NEAR THE PROJECT AREA.
8. STATE WATERS HAVE BEEN IDENTIFIED ON OR WITHIN 200' FEET OF THE PROJECT AREA.
9. THE RECEIVING WATERS FOR THE PROJECT HAS BEEN IDENTIFIED AS LAKE LANIER.
10. IMPAIRED WATERS HAVE BEEN IDENTIFIED WITHIN 1 MILE OF THE PROJECT AREA FOR THE PROJECT. THE IMPAIRED WATER IS IDENTIFIED AS FLOWERY BRANCH; A TRIBUTARY OF LAKE LANIER.
11. THE PROPERTIES SHOWN HEREON ARE LOCATED IN FLOOD ZONE X AS PER FLOOD INSURANCE RATE MAP FOR FLOWERY BRANCH, HALL COUNTY, GA AND SHOWN ON MAP NO. 13139C0283G WITH AN EFFECTIVE DATE OF APRIL 4, 2018. FLOOD ZONE X DENOTES AREA OF MINIMAL FLOOD CONCERNS.

ESG ENGINEERING
6400 Peake Rd
Macon, GA 31210
Ph: (478) 474-4996
Fax: (478) 474-5045

GROUNDWATER WELLS #4 & #5

FOR THE

CITY OF FLOWERY BRANCH

REVISIONS

NO.	DESCRIPTION	DATE
1	ESPC SHEETS	11-7-25
2	BID SET OF PLANS	12-1-25
3	REVISED WITH CITY COMMENTS	12-5-25

BID SET

GEORGIA REGISTERED No. PE046341 PROFESSIONAL ENGINEER ANDREW D SWICEGOOD

DRAWN BY: DSC
CHECKED BY: ADS
DATE: OCT 2025
SCALE: N.T.S.

CONTENT:

GENERAL NOTES

SHEET NO: 2
C0.1

*DISTURBED AREA CALCULATIONS:

PROJECT SITE: 2.14 AC
TOTAL DISTURBED AREA: 1.06 AC

DISTURBED AREA (OFF SITE): 0.14 AC
DISTURBED AREA (ON SITE): 0.92 AC
DISTURBED AREA = 0.92 AC / 2.14 AC = 43% OF PROJECT SITE
< 50% GOOD

IMPERVIOUS AREA = 1400 SF -> 0.032 AC / 1.06 AC = 3.0%

<50% GOOD
<15% GOOD

STATE ROUTE 13
(100' RIGHT-OF-WAY)

RAILROAD AVENUE

SAW CUT STRAIGHT EDGE ±160 LF

10' LANDSCAPING BUFFER

COORDINATE WITH GA POWER TO RELOCATE EX. GUY WIRES

RE-ESTABLISH GRAVEL DRIVE AT PROPOSED GRADE (SEE GRADING & SITE PLANS)

CLEAR, GRUB, AND MULCH SITE

DEMOLISH EX. CONC. PAD

EX. ABANDONED WELLHEAD LOCATION

DEMOLISH EX. CONC. PAD & REMOVE EX. FENCING

REMOVE APPROX. 8 TREES (TYP.)

EX. UTILITY POLE (TYP.)

10' BUILDING SETBACK

75' IMPERVIOUS BUFFER

50' LOCAL STREAM BUFFER

25' STREAM BUFFER

30' BUILDING SETBACK

EX. 12" SAN. SEWER

EX. STREAM CENTERLINE

EX. 20' SEWER EASEMENT

EX. WETLANDS (APPROX.)

VIREO DR

AREA
2.141 ACRES
PARCEL ID: 08098 001001, 08098 001002 1, 08098 001003, 08098 001004
CITY OF FLOWERY BRANCH GEORGIA
DEED BOOK 9253, PAGE 463
PLAT BOOK 876, PAGE 1

*LIMITS OF DISTURBANCE
0.92 AC (ON-SITE)
0.14 AC (OFF-SITE)
±1.06 AC (TOTAL)

PARCEL ID: 08098 01009
KOSWIRE INC.
4600 CANTRELL ROAD
FLOWERY BRANCH, GA 30542
26.72 ACRES

PARCEL ID: 08098A000206
WATER STONE CROSSING COMMUNITY ASSOC INC
DEED BOOK 4312, PAGE 80
PLAT BOOK 816, PAGE 154A

PARCEL ID: 08098 A000206
WATER STONE CROSSING COMMUNITY ASSOCIATION
4611 BEACON RIDGE LANE
FLOWERY BRANCH, GA 30542
15.52 ACRES

HATCH LEGEND:

- EXISTING ASPHALT PAVEMENT
- EX. GRAVEL
- EXISTING CONCRETE
- DEMOLITION

EXISTING CONDITIONS & DEMOLITION NOTES:

1. THE SURVEY WAS PROVIDED BY EMC ENGINEERING SERVICES, IMC. AND DATED 03/04/2025. A COPY CAN BE PROVIDED UPON WRITTEN REQUEST.
2. THE CONTRACTOR SHALL REVIEW ALL DOCUMENTS AND OBTAIN FIRST HAND KNOWLEDGE OF THE PROJECT AREA. IF ANY DISCREPANCY ARE DISCOVERED NOTIFY THE ENGINEER IN WRITING WITHIN 24 HOURS.
3. THE CONTRACTOR SHALL PROVIDE 72 HOUR NOTICE THE THE UTILITIES PROTECTION CENTER PRIOR TO CONSTRUCTION COMMENCEMENT OR EXCAVATION. THE CONTRACTOR SHALL PROVIDE ADEQUATE PROTECTION FOR ALL EXISTING UTILITIES WITHIN THE CONSTRUCTION AREA AND REPAIR ANY UTILITIES DAMAGED DURING CONSTRUCTION AT NO COST TO THE OWNER/DEVELOPER.
4. THE CONTRACTOR SHALL COORDINATE ALL UTILITY DISCONNECTIONS / INTERRUPTIONS WITH THE UTILITY OWNER.
5. THE CONTRACTOR SHALL COORDINATE WITH UTILITY OWNERS ON ALL CONFLICTS.
6. THE CONTRACTOR SHALL PROVIDE APPROPRIATE SECURITY FEATURES (WARNING, DIVERSIONS, BARRIERS, ETC.) TO SECURE THE PROJECT AREA. THE CONTRACTOR SHALL PROVIDE / MAINTAIN THE ADEQUATE PEDESTRIAN ACCESS AROUND THE PROJECT AREA.
7. THE CONTRACTOR SHALL TAKE SPECIAL CARE TO PROTECT ALL TREES NOT SHOWN HEREON TO BE REMOVED AND PROVIDE ADEQUATE TREE PROTECTION AROUND THE CRITICAL ROOT ZONE FOR SUCH TREES.
8. ALL ITEMS INDICATED HEREON TO BE REMOVED / DEMOLISHED SHALL BECOME THE PROPERTY OF THE CONTRACTOR AND DISPOSED OF PROPERLY UNLESS OTHERWISE STATED WITHIN THE CONSTRUCTION CONTRACT.
9. ALL EXISTING ASPHALT / CONCRETE PAVEMENT & CURB SHALL BE PROTECTED FROM CONSTRUCTION ACTIVITIES. THE CONTRACTOR SHALL BE RESPONSIBLE FOR REPAIR / REPLACEMENT OF ANY DAMAGED AREAS.

GRAPHIC SCALE 1" = 20'

GEORGIA811 www.Georgia811.com

ESG ENGINEERING
6400 Peake Rd
Macon, GA 31210
Ph: (478) 474-4996
Fax: (478) 474-5045

GROUNDWATER WELLS #4 & #5

FOR THE
CITY OF FLOWERY BRANCH

REVISIONS

NO.	DESCRIPTION	DATE
1	ESPC SHEETS	11-7-25
2	BID SET OF PLANS	12-1-25
3	REVISED WITH CITY COMMENTS	12-5-25

BID SET

GEORGIA REGISTERED No. PE046341 PROFESSIONAL ENGINEER ANDREW D SWICEGOOD

DRAWN BY: DSC
CHECKED BY: ADS
DATE: OCT 2025
SCALE: SEE SCALE

CONTENT:

CIVIL:
EXISTING CONDITIONS & DEMOLITION PLAN

SHEET NO: 2
C1.0

*DISTURBED AREA CALCULATIONS:

PROJECT SITE: 2.14 AC
TOTAL DISTURBED AREA: 1.06 AC

DISTURBED AREA (OFF SITE): 0.14 AC
DISTURBED AREA (ON SITE): 0.92 AC
DISTURBED AREA = 0.92 AC / 2.14 AC = 43% OF PROJECT SITE
< 50% GOOD

IMPERVIOUS AREA = 1400 SF -> 0.032 AC / 1.06 AC = 3.0%

<50% GOOD
<15% GOOD

STATE ROUTE 13
(100' RIGHT-OF-WAY)

RAILROAD AVENUE

10' LANDSCAPING BUFFER

SEE SHEET C2.2 FOR BUILDING DETAIL PLAN

CHEMICAL FEED BUILDING
FFE: 1122.20
AREA: 392 SF

±1,300 SY GRAVEL DRIVE
(SEE DETAIL ON SHEET C9.0)

PR. DIESEL GENERATOR

±600 LF 6' CHAIN LINK SECURITY FENCING W/ BARBED WIRE

HENDERSON WELL

EX. ABANDONED WELLHEAD. MARK LOCATION WITH STAKE.

WATERSTONE WELL

PR. 24' DOUBLE-SWING GATE W/ BARBED WIRE

R15' R15' R15' R30' R60' R40' R10' R85' R75' R75'

35' 20' 20' ±20' 12' 28' 9' ±15' 19' 14'

10' BUILDING SETBACK

75' IMPERVIOUS BUFFER

50' LOCAL STREAM BUFFER

25' STREAM BUFFER

30' BUILDING SETBACK

EX. STREAM CENTERLINE

EX. WETLANDS (APPROX.)

EX. WETLANDS (APPROX.)

VIREO DR

AREA
2.141 ACRES
PARCEL ID: 08098 001001, 08098 001002 / 08098 001003, 08098 001004
CITY OF FLOWERY BRANCH GEORGIA
DEED BOOK 9253, PAGE 463
PLAT BOOK 876, PAGE 1

*LIMITS OF DISTURBANCE
0.92 AC (ON-SITE)
0.14 AC (OFF-SITE)
±1.06 AC (TOTAL)

PARCEL ID: 08098A000206
WATER STONE CROSSING COMMUNITY ASSOC INC
DEED BOOK 4312, PAGE 80
PLAT BOOK 816, PAGE 154A

PARCEL ID: 08098 01009
KOSWIRE INC.
4600 CANTRELL ROAD
FLOWERY BRANCH, GA 30542
26.72 ACRES

PARCEL ID: 08098 A000206
WATER STONE CROSSING COMMUNITY ASSOCIATION
4611 BEACON RIDGE LANE
FLOWERY BRANCH, GA 30542
15.52 ACRES

EX. TOWNHOUSE

DWCB TOP: 1119.00 IE: 1114.12 18" RCP

DWCB TOP: 1119.29 IE: 1113.93 18" RCP IE: 1113.85 18" CMP

SWCB TOP: 1122.40 IE: 1116.80 18" CMP

18" CMP IE:1116.56

54" CMP IE:1115.31

96" CMP IE:1107.85

96" CMP IE:1107.73

96" CMP IE:1108.39

96" CMP IE:1108.52

18" RCP IE:1124.92

18" RCP IE:1123.17

18" RCP IE:1122.91

15" CMP IE:1121.23

15" CMP IE:1121.03

15" RCP IE:1118.06

15" RCP IE:1117.34

18" RCP IE:1118.84

18" RCP IE:1111.93

GRAPHIC SCALE 1" = 20'

GENERAL SITE NOTES:

1. CONTRACTOR SHALL CLEAR & GRUB ALL AREAS WITHIN THE EASEMENT. ALL REMOVED MATERIAL SHALL BE HAULED OFF SITE AND DISPOSED OF AT A LICENSED LANDFILL-NO BURNING SHALL BE ALLOWED.
2. EXISTING UTILITIES ARE APPROXIMATE AND ARE TO BE FIELD VERIFIED BY CONTRACTOR. CONTRACTOR SHALL INFORM ENGINEER OF ANY DISCREPANCIES IN INFORMATION PRIOR TO BEGINNING WORK.
3. HORIZONTAL DATA SHOWN HEREON IS BASED ON NAD83 GEORGIA STATE PLANES, WEST ZONE, US FOOT. VERTICAL DATA SHOWN HEREON IS BASED ON NAVD88.
4. CONTRACTOR SHALL PROTECT ALL EXISTING UTILITIES. CONTRACTOR SHALL REPAIR OR REPLACE, AT HIS OR HER OWN EXPENSE, ANY UTILITIES DAMAGED DURNING CONSTRUCTION.
5. CONTRACTOR SHALL COORDINATE WITH POWER & TELECOM COMPANIES FOR PROTECTION OF ANY EXISTING AND/OR RELOCATED OVERHEAD OR UNDERGROUND UTILITIES.

EROSION & SEDIMENT CONTROL NOTE:

1. CONTRACTOR SHALL PLACE TEMP. AND PERM. GRASSING ON ALL DISTURBED PERVIOUS AREAS. CONTRACTOR SHALL INSTALL SINGLE-ROW SILT FENCE ALONG THE DOWNSTREAM EDGE OF ALL DISTURBED PERVIOUS AREAS AND INSTALL DOUBLE-ROW SILT FENCE ADJACENT TO STREAM BUFFERS. CONTRACTOR SHALL INSTALL CHECK DAMS AT 2' VERTICAL INTERVALS WHERE PROPOSED CONSTRUCTION DISTURBS OR PARALLELS ROADSIDE DRAINAGE DITCHES.

HATCH LEGEND:

ASPHALT PAVEMENT

CONCRETE PAD AREAS

GRAVEL SITE PAD / ACCESS DRIVE

GEORGIA811 www.Georgia811.com

ESG ENGINEERING
6400 Peake Rd
Macon, GA 31210
Ph: (478) 474-4996
Fax: (478) 474-5045

GROUNDWATER WELLS #4 & #5

FOR THE
CITY OF FLOWERY BRANCH

REVISIONS

NO.	DESCRIPTION	DATE
1	ESPC SHEETS	11-7-25
2	BID SET OF PLANS	12-1-25
3	REVISED WITH CITY COMMENTS	12-5-25

BID SET

GEORGIA REGISTERED No. PE046341 PROFESSIONAL ENGINEER ANDREW D SWICEGOOD

DRAWN BY: DSC
CHECKED BY: ADS
DATE: OCT 2025
SCALE: SEE SCALE

CONTENT:

CIVIL:
SITE PLAN

SHEET NO: 2 3
C2.0

CONSTRUCTION NOTES:

1. ALL EXTERIOR, EXPOSED ABOVE GROUND PIPING SHALL HAVE INSULATION PROVIDED, CONSISTING OF A POLYURETHANE FOAM CORE AND PVC JACKET TO MATCH CORRESPONDING PIPE SIZE. CONTRACTOR SHALL ENSURE SEAL BETWEEN JACKET/INSULATION AND PIPING.
2. PR. 3-WAY FIRE HYDRANT ASSEMBLY, CONSISTING OF 8"x6" RJ DI TEE, 6" RJ GATE VALVE W/ BOX & COVER, & 6" RJ DI LEAD PIPE.
3. ALL DUCTILE IRON PIPE, FITTINGS, & VALVES SHALL BE LINED WITH TNEMEC SERIES N140 POTA-POX PLUS OR APPROVED EQUAL.
4. REQUIREMENTS FOR COATING OF ABOVE-GROUND (EXPOSED) DUCTILE IRON PIPES, FITTINGS, AND VALVES:

PROP. SYSTEM TYPE:	EPOXY/EPOXY/POLYURETHANE
PROP. SURFACE PREPARATION:	PER MANUFACTURER'S RECOMMENDATION
PROP. PRIMER:	SERIES N69 HI-BUILD EPOXOLINE II - 3.0 TO 5.0 MILS DFT
PROP. INTERMEDIATE COAT:	SERIES N69 HI-BUILD EPOXOLINE II - 4.0 TO 6.0 MILS DFT
PROP. FINISH COAT:	SERIES 73 ENDURA-SHIELD - 2.0 TO 3.0 MILS DFT
PROP. TOTAL DFT:	9.0 TO 14.0 MILS
PROP. FINISH COLOR:	[AS SELECTED BY ENGINEER] FROM MANUFACTURER'S STANDARD COLORS

5. REQUIREMENTS FOR COATING OF BELOW GRADE (BURIED) DUCTILE IRON PIPES, FITTINGS, AND VALVES SHALL BE AS OUTLINED IN SPECIFICATION SECTIONS 11200 & 02530.

SCALE: 1/2" = 1'-0"

EDGE OF GRAVEL DRIVE

PR. 6" RJXFL DIP SPOOL PIECE
PR. 8"x6" RJ DI REDUCER
PR. 1.5" DOUBLE STRAP TAPPING SADDLE (INCL. UNDER WELL SITE IMPROVEMENTS LINE ITEM)
PR. PRECAST METER/BACKFLOW VAULT
PR. 1.5" PVC WATER LINE W/ ISOLATION VALVE, METER, AND BACKFLOW PREVENTER IN METER BOX TO BE SET IN STONE BEDDING
PR. 6" FL. 709DCDA DOUBLE CHECK DETECTOR ASSEMBLY BACKFLOW PREVENTER
PR. 6" FL DIP SPOOL PIECE
PR. 6" FL DI 90° BEND
PR. 6" RJXFL DIP SPOOL PIECE
PR. 4" FL. GATE VALVE W/ HANDWHEEL
PR. 59.5"x83.5" ALUMINUM ACCESS HATCH CAST INTO VAULT TOP (EJ H60841918 OR APPROVED EQUAL)
PR. FROST PROOF YARD HYDRANT W/ 3/4" HOSE CONNECTION
DEPRESSED CHEMICAL STORAGE BASIN
COVERED SHELTER ROOF EDGE/EAVE
PR. FULL DEPTH ASPHALT SECTION PER DETAIL ON SHEET C9.4
CONC. WALKING AREA (4" THICK)
PR. 3" PVC DRAIN LINE FROM BACKFLOW VAULT
DEPRESSED CHEMICAL STORAGE BASIN
PR. 4" CPVC UNDER DRAIN SPILL CONTAINMENT SYSTEM
CONTRACTOR SHALL RUN DRAIN LINE @ 1% MIN. SLOPE & DAYLIGHT INTO PR. SLOPE
SSMH-1 (VACUUM POINT - SEE COATING NOTES)
RIM: 1122.20
INV: 1114.20
CO-2
RIM: 1122.10
INV: 1113.50
SSMH-2 (SEE COATING NOTES)
RIM: 1122.20
INV: 1116.20
ELECTRICAL & HVAC LINES NOT SHOWN FOR CLARITY - SEE MECHANICAL PLANS FOR DETAILED PLACEMENT OF HVAC SYSTEM COMPONENTS.
PR. HVAC CONDENSER PAD (SEE DETAIL ON SHEET C9.4)
EMAX TANKLESS WATER HEATER 32 kW PRO SERIES XTP 032208
CHLORINE INJECTION (SEE DETAIL ON SHEET C9.1)
FLUORIDE INJECTION (SEE DETAIL ON SHEET C9.1)
PR. 6" FL GATE VALVE W/ HANDWHEEL
PR. 6"x4" FL DI WYE
PR. 6" FL DIP
PR. 4" FL DI 45° BEND
PR. 4" FL DIP
PR. 4" FL DI SPOOL PIECE
PR. 1.5" DOMESTIC WATER
PR. SPIGOT (TYP. OF 3)
PR. EYE WASH & SHOWER STATION U-LINE H-10735 (TYP. OF 2)
PR. MOP BASIN PROFLO PFMB2424 (TYP. OF 2)
PR. 4" PVC BUILDING SEWER LINE (SEE PLUMBING PLAN FOR DETAILED LAYOUT)
6" CORDONEL ULTRASONIC FLOW METER
PR. 6" FL. GATE VALVE W/ HANDWHEEL
CORE WALL & INSTALL LS-200 LINK SEAL. PROVIDE GROUTING OF ANNULAR SPACE ON BOTH INTERIOR & EXTERIOR OF BUILDING (TYP. ALL WALL PENETRATIONS)
PR. 6" FL DI 90° BEND
PR. 6" RJ DIP
4" CORDONEL ULTRASONIC FLOW METER
PR. 4" FL. GATE VALVE W/ HANDWHEEL
PR. 4" FL. DI 90° BEND
PR. 4" RJ DIP
PR. 6" RJ GATE VALVE W/ RISER BOX & COVER
PR. 4" FL. DI LONG RADIUS 90° BEND. INSTALL 3/4" HOSE BIB ON RISER PIPE W/ TAPPING SADDLE.
STUB-OUT 4" FL. BUTTERFLY VALVE W/ HANDWHEEL (SEE DETAIL ON SHEET C9.4)
PR. INSULATED FIBERGLASS ENCLOSURE, APPROX. DIMENSIONS 36x24x36 (HUBBELL HOT BOX OR APPROVED EQUAL)
PR. 4" BLIND FLANGE
PR. 4" RJ DI 22.5° BEND
PR. 4" RJ DIP
TO WATERSTONE WELL (SEE INSET "A" THIS SHEET)
WELL HOUSE PREFABRICATED ENCLOSURE BY CLAY-GREENE (TYP. OF 2)
PR. 4" FL. CHECK VALVE
PR. 4"x6" FL. DI REDUCER
PR. 6" FL. DI LONG RADIUS 90° BEND
PR. 6"x4" RJ DI TEE
PR. 4" FL. DI LONG RADIUS 90° BEND
SEE WELL SECTIONS ON DETAIL SHEET C9.3
HENDERSON WELL - SEE SECTION 80001 FOR WELL REHABILITATION
PLACE 8'x6' CONC. PAD FOR WELL HOUSE (SEE DETAIL ON SHEET C9.4)
4" CRUSHER RUN PLACED BENEATH ENCLOSURE
PIPE GALLERY ROOM
CHLORINE ROOM
FLUORIDE ROOM
4-EA GRUNDFOS CHEMICAL FEED PUMPS DDE 6-10 B-PV/T/C-X-31003BC (SEE SECTION 70001)
SEE SECTION 70001 FOR CHEMICAL FEED SYSTEM PIPING & VALVES
PR. REMOVABLE RAMP (U-LINE H-4038)
PR. SPILL CONTAINMENT PALLET (U-LINE H-4036)
4-EA GRUNDFOS CHEMICAL FEED PUMPS DDE 6-10 B-PV/T/C-X-31003BC (SEE SECTION 70001)
PR. 4" CPVC UNDER DRAIN SPILL CONTAINMENT SYSTEM (SEE PLUMBING PLAN FOR DETAILED LAYOUT)
PR. REMOVABLE RAMP (U-LINE H-4038)
PR. SPILL CONTAINMENT FLOOR DRAIN (TYP. OF 5)
PR. SPILL CONTAINMENT PALLET (U-LINE H-4036)

CHEMICAL STORAGE BASIN & SPILL CONTAINMENT MANHOLE COATING SYSTEM:

- SURFACE PREP: CSP 4–6
- PRIMER: 100% SOLIDS EPOXY OR VE PRIMER, 6–10 MILS
- INTERMEDIATE COAT: NOVOLAC EPOXY OR VE, 15–20 MILS
- TOPCOAT: HIGH-BUILD NOVOLAC EPOXY OR VINYL ESTER, 80–125 MILS

INSET "A"
SCALE: 1/2" = 1'-0"

STUB-OUT 4" FL. BUTTERFLY VALVE W/ HAND WHEEL (SEE DETAIL ON SHEET C9.4)
4" CRUSHER RUN PLACED BENEATH ENCLOSURE
PR. INSULATED FIBERGLASS ENCLOSURE, APPROX. DIMENSIONS 36x24x36 (HUBBELL HOT BOX OR APPROVED EQUAL)
TO CHEMICAL FEED BUILDING (THIS SHEET)
PR. 4" RJ DIP
PR. 4" RJ GATE VALVE W/ RISER BOX & COVER
PR. 4" RJ DI TEE
PR. 2-EA 4" FL. DI LONG RADIUS 90° BEND, 4" FLxRJ DI SPOOL PIECE, & 4" RJ DI 90° BEND
WELL HOUSE PREFABRICATED ENCLOSURE BY CLAY-GREENE (TYP. OF 2)
25' STREAM BUFFER
PR. 4" BLIND FLANGE
PR. 4" FL. DI LONG RADIUS 90° BEND. INSTALL 3/4" HOSE BIB ON RISER PIPE W/ TAPPING SADDLE.
PLACE 8'x6' CONC. PAD FOR WELL HOUSE (SEE DETAIL ON SHEET C9.4)
PR. 4" FL. CHECK VALVE
SEE WELL SECTIONS ON DETAIL SHEET C9.3
WATERSTONE WELL - SEE SECTION 80001 FOR WELL REHABILITATION

GEORGIA811 www.Georgia811.com

ESG ENGINEERING
6400 Peake Rd
Macon, GA 31210
Ph: (478) 474-4996
Fax: (478) 474-5045

GROUNDWATER WELLS #4 & #5

FOR THE CITY OF FLOWERY BRANCH

NO.	DESCRIPTION	DATE
1	ESPC SHEETS	11-7-25
2	BID SET OF PLANS	12-1-25
3	REVISED WITH CITY COMMENTS	12-5-25

REVISIONS

BID SET

GEORGIA REGISTERED No. PE046341 PROFESSIONAL ENGINEER ANDREW D SWICEGOOD

DRAWN BY: DSC
CHECKED BY: ADS
DATE: OCT 2025
SCALE: SEE SCALE

CONTENT:

CIVIL:
BUILDING PIPING PLAN

SHEET NO: C2.1

CONSTRUCTION NOTES:

1. INTERIOR WALL COATING FOR THE CHEMICAL FEED BUILDING SHALL BE AS FOLLOWS:
   - BASE: EPOXY PRIMER (8-12 MILS DFT)
   - TOP: CHEMICAL-RESISTANT EPOXY OR NOVOLAC EPOXY (6-10 MILS)
2. INTERIOR & EXTERIOR FLOOR COATING FOR THE CHEMICAL FEED BUILDING SHALL BE AS FOLLOWS:
   - BASE: EPOXY FLOOR PRIMER (3-5 MILS DFT)
   - INTERMEDIATE: HIGH-BUILD EPOXY COAT (10-20 MILS DFT)
   - TOP: UV-STABLE ALIPHATIC POLYURETHANE (2-4 MILS DFT)
3. LINING FOR CHEMICAL STORAGE BASIN SHALL BE AS FOLLOWS:
   - SURFACE PREP: CSP 4–6
   - PRIMER: 100% SOLIDS EPOXY OR VE PRIMER, 6–10 MILS
   - INTERMEDIATE COAT: NOVOLAC EPOXY OR VE, 15–20 MILS
   - TOPCOAT: HIGH-BUILD NOVOLAC EPOXY OR VINYL ESTER, 80–125 MILS
4. COATING SYSTEM SHALL BE BY TNEMEC, PPG, SHERWIN-WILLIAMS, OR APPROVED EQUAL.
5. CONTRACTOR SHALL SUBMIT A SCHEDULE OF THE PROPOSED WALL & FLOOR COATING SYSTEM PRIOR TO ORDERING MATERIALS FOR REVIEW AND APPROVAL BY THE ENGINEER.

SCALE: 1/2" = 1'-0"

CONTRACTOR SHALL RUN/STUB-OUT 3" PVC CONDUIT TO METERING POINT AT BLDG. (SEE UTILITY PLAN FOR CONTINUATION)

EDGE OF GRAVEL DRIVE

PR. BOLLARD (TYP. OF 4)

EMAX TANKLESS WATER HEATER 32 kW PRO SERIES XTP 032208

PR. LOUVRE

PR. HVAC CONDENSER PAD (SEE DETAIL ON SHEET C9.4)

PR. WALL PACK LIGHTS (TYP. OF 3)

PR. EXHAUST

PREFABRICATED CHEMICAL FEED BUILDING (SEE BUILDING PLANS)

SEE ELECTRICAL SHEETS FOR EXACT PLACEMENT & LAYOUT OF EQUIPMENT

SEE ELECTRICAL SHEETS FOR EXACT PLACEMENT & LAYOUT OF ELECTRICAL & CONTROLS EQUIPMENT.

PIPE GALLERY ROOM

PR. EYE WASH & SHOWER STATION U-LINE H-10735 (TYP. OF 2)

PR. EXHAUST

CHLORINE ROOM

PR. SPIGOT & MOP BASIN PROFLO PFMB2424 (TYP. OF 2)

BUILDING FFE: 1122.20

PR. REMOVABLE RAMP (U-LINE H-4038)

PR. SPILL CONTAINMENT PALLET (U-LINE H-4036)

PR. EXHAUST

FLUORIDE ROOM

PR. REMOVABLE RAMP (U-LINE H-4038)

PR. SPILL CONTAINMENT FLOOR DRAIN (TYP. OF 5 - SEE PLUMBING PLAN)

PR. SPILL CONTAINMENT PALLET (U-LINE H-4036)

PR. 4" DOWNSPOUT AND 1'x1.5' SPLASH PAD (TYP. OF 3)

DEPRESSED CHEMICAL STORAGE BASIN (SEE NOTE #3)

COVERED SHELTER ROOF EDGE/EAVE

4" CONC. WALKING AREA (SEE NOTE #2)

PR. FULL DEPTH ASPHALT SECTION PER DETAIL ON SHEET C9.4

METAL DOOR (TYP. OF 3)

PR. LOUVRE

DEPRESSED CHEMICAL STORAGE BASIN (SEE NOTE #3)

POLE BARN CHEMICAL STORAGE COVER

PR. CONC. FOOTER (TYP. OF 4) (SEE DETAIL ON SHEET C9.4)

PLACE 8'x6' CONC. PAD FOR WELL HOUSE (SEE DETAIL ON SHEET C9.4)

HENDERSON WELL

4" CRUSHER RUN PLACED BENEATH ENCLOSURE

PR. FIBERGLASS ENCLOSURE, APPROX. DIMENSIONS 36x24x36 (HUBBELL HOT BOX OR APPROVED EQUAL)

SEE ELECTRICAL SHEETS FOR CONDUIT/WIRING RUNS

PR. HENDERSON WELL MAIN PANEL (SEE ELECTRICAL SHEETS)

TO WATERSTONE WELL (SEE INSET "A" THIS SHEET)

INSET "A"
SCALE: 1/2" = 1'-0"

PR. CHAIN LINK FENCE

25' STREAM BUFFER

4" CRUSHER RUN PLACED BENEATH ENCLOSURE

PR. FIBERGLASS ENCLOSURE, APPROX. DIMENSIONS 36x24x36 (HUBBELL HOT BOX OR APPROVED EQUAL)

PLACE 8'x6' CONC. PAD FOR WELL HOUSE (SEE DETAIL ON SHEET C9.4)

WATERSTONE WELL

PR. WATERSTONE WELL MAIN PANEL (SEE ELECTRICAL SHEETS)

TO CHEMICAL FEED BUILDING (THIS SHEET)

PR. 3-PHASE POWER (SEE ELECTRICAL FOR CONTINUATION)

ESG ENGINEERING
6400 Peake Rd
Macon, GA 31210
Ph: (478) 474-4996
Fax: (478) 474-5045

GROUNDWATER WELLS #4 & #5

FOR THE CITY OF FLOWERY BRANCH

REVISIONS

NO.	DESCRIPTION	DATE
1	ESPC SHEETS	11-7-25
2	BID SET OF PLANS	12-1-25
3	REVISED WITH CITY COMMENTS	12-5-25

BID SET

GEORGIA REGISTERED No. PE046341 PROFESSIONAL ENGINEER ANDREW D SWICEGOOD

DRAWN BY: DSC
CHECKED BY: ADS
DATE: OCT 2025
SCALE: SEE SCALE

CONTENT:

CIVIL:
BUILDING DETAIL PLAN

SHEET NO: 3
C2.2

GEORGIA811 www.Georgia811.com

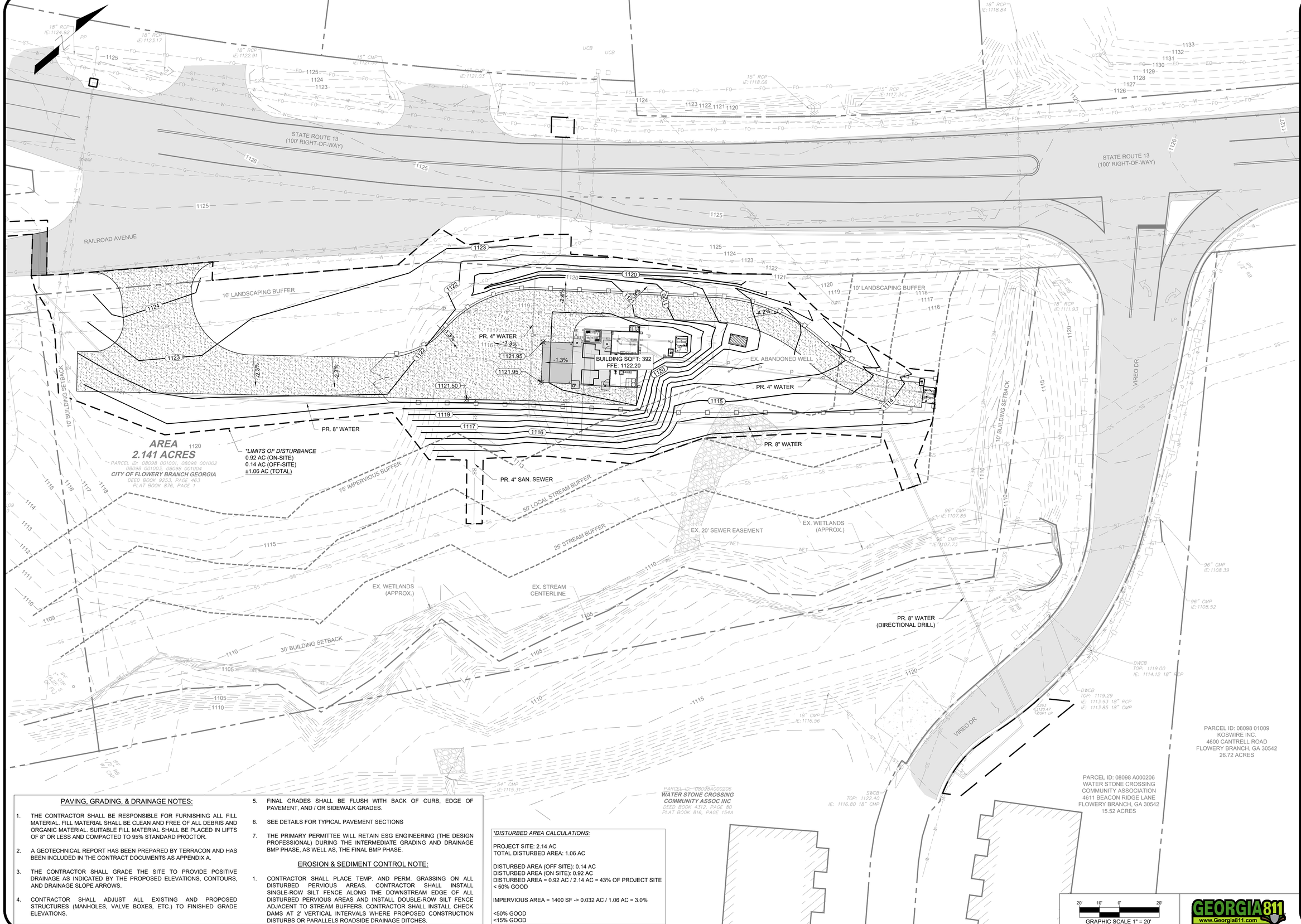

PAVING, GRADING, & DRAINAGE NOTES:

1. THE CONTRACTOR SHALL BE RESPONSIBLE FOR FURNISHING ALL FILL MATERIAL. FILL MATERIAL SHALL BE CLEAN AND FREE OF ALL DEBRIS AND ORGANIC MATERIAL. SUITABLE FILL MATERIAL SHALL BE PLACED IN LIFTS OF 8" OR LESS AND COMPACTED TO 95% STANDARD PROCTOR.
2. A GEOTECHNICAL REPORT HAS BEEN PREPARED BY TERRACON AND HAS BEEN INCLUDED IN THE CONTRACT DOCUMENTS AS APPENDIX A.
3. THE CONTRACTOR SHALL GRADE THE SITE TO PROVIDE POSITIVE DRAINAGE AS INDICATED BY THE PROPOSED ELEVATIONS, CONTOURS, AND DRAINAGE SLOPE ARROWS.
4. CONTRACTOR SHALL ADJUST ALL EXISTING AND PROPOSED STRUCTURES (MANHOLES, VALVE BOXES, ETC.) TO FINISHED GRADE ELEVATIONS.
5. FINAL GRADES SHALL BE FLUSH WITH BACK OF CURB, EDGE OF PAVEMENT, AND / OR SIDEWALK GRADES.
6. SEE DETAILS FOR TYPICAL PAVEMENT SECTIONS
7. THE PRIMARY PERMITTEE WILL RETAIN ESG ENGINEERING (THE DESIGN PROFESSIONAL) DURING THE INTERMEDIATE GRADING AND DRAINAGE BMP PHASE, AS WELL AS, THE FINAL BMP PHASE.

EROSION & SEDIMENT CONTROL NOTE:

1. CONTRACTOR SHALL PLACE TEMP. AND PERM. GRASSING ON ALL DISTURBED PERVIOUS AREAS. CONTRACTOR SHALL INSTALL SINGLE-ROW SILT FENCE ALONG THE DOWNSTREAM EDGE OF ALL DISTURBED PERVIOUS AREAS AND INSTALL DOUBLE-ROW SILT FENCE ADJACENT TO STREAM BUFFERS. CONTRACTOR SHALL INSTALL CHECK DAMS AT 2' VERTICAL INTERVALS WHERE PROPOSED CONSTRUCTION DISTURBS OR PARALLELS ROADSIDE DRAINAGE DITCHES.

DISTURBED AREA CALCULATIONS:

PROJECT SITE: 2.14 AC
TOTAL DISTURBED AREA: 1.06 AC

DISTURBED AREA (OFF SITE): 0.14 AC
DISTURBED AREA (ON SITE): 0.92 AC
DISTURBED AREA = 0.92 AC / 2.14 AC = 43% OF PROJECT SITE
< 50% GOOD

IMPERVIOUS AREA = 1400 SF -> 0.032 AC / 1.06 AC = 3.0%

<50% GOOD
<15% GOOD

ESG ENGINEERING
6400 Peake Rd
Macon, GA 31210
Ph: (478) 474-4996
Fax: (478) 474-5045

GROUNDWATER WELLS #4 & #5

FOR THE
CITY OF FLOWERY BRANCH

REVISIONS

NO.	DESCRIPTION	DATE
1	ESPC SHEETS	11-7-25
2	BID SET OF PLANS	12-1-25
3	REVISED WITH CITY COMMENTS	12-5-25

BID SET

GEORGIA REGISTERED PROFESSIONAL ENGINEER
No. PE046341
ANDREW D SWICEGOOD

DRAWN BY: DSC
CHECKED BY: ADS
DATE: OCT 2025
SCALE: SEE SCALE

CONTENT:
CIVIL:
GRADING & DRAINAGE PLAN

SHEET NO: 23
C3.0

GEORGIA811 www.Georgia811.com

*DISTURBED AREA CALCULATIONS:

PROJECT SITE: 2.14 AC
TOTAL DISTURBED AREA: 1.06 AC

DISTURBED AREA (OFF SITE): 0.14 AC
DISTURBED AREA (ON SITE): 0.92 AC
DISTURBED AREA = 0.92 AC / 2.14 AC = 43% OF PROJECT SITE
< 50% GOOD

IMPERVIOUS AREA = 1400 SF -> 0.032 AC / 1.06 AC = 3.0%

<50% GOOD
<15% GOOD

PR. DIG PIT
EX. 6" PVC WATER LINE (OWNED BY CITY OF GAINESVILLE)
CUT, CAP, & ABANDON EX. 2" WATER LINE IN PLACE GDOT APPROVAL #U-139-012970-1
STATE ROUTE 13 (100' RIGHT-OF-WAY)
PR. LAUNCHING PIT
PR. 4" WATER MAIN EXTENSION - CONNECT TO EX. LINE W/ 2" TAPPING SLEEVE & VALVE, RJ DI BENDS & RJ DI REDUCER
EX. 2" PVC WATER LINE (OWNED BY CITY OF FLOWERY BRANCH)
4" RJ DIP WATER MAIN INSTALLED VIA HORIZONTAL DIRECTIONAL DRILL GDOT APPROVAL #U-139-012970-1
STATE ROUTE 13 (100' RIGHT-OF-WAY)
MATCHLINE - SEE SHEET 4.1
8" RJ DI 90° BEND
EX. 6" HIGH PRESSURE STL. GAS MAIN
OPEN CUT PAVEMENT (SEE PAVEMENT PATCH DETAIL ON SHEET 9.0)
POTHOLE AND VERIFY IF EX. WATER LINE IS ACTIVE
RAILROAD AVENUE
EX. 10" RECLAIM WATER
4" RJ DI 45° BEND
PR. RECEIVING PIT
EX. 10" RECLAIM WATER
PR. FIRE HYDRANT ASSEMBLY (INCL. 8"x6" RJ DI TEE, 6" RJ GATE VALVE, & 6" RJ DI LEAD PIPE)
EX. FIBER OPTIC LINE
10' LANDSCAPING BUFFER
EX. 1.25" GAS LINE
COORDINATE WITH GA POWER TO RELOCATE EX. GUY WIRES
CONTRACTOR SHALL RUN/STUB-OUT 3" PVC CONDUIT FROM EX. POWER POLE TO PR. METERING POINT AT BLDG.
10' LANDSCAPING BUFFER
PR. DIG PIT
EX. 2" WATER
8" RJ DI 45° BEND
PR. 4" DIP
HENDERSON WELL
PR. DIESEL GENERATOR ON CONC. SLAB PER DETAIL (SEE SHEET C9.4)
PR. 8" RJ DI TEE W/ 8"x4" RJ DI REDUCER
PR. 8" RJ GATE VALVE W/ BOX & COVER
POTHOLE AND VERIFY IF EX. WATER LINE IS ACTIVE
SEE BUILDING PIPING PLAN FOR CONTINUATION
PR. 4" WATER
EX. ABANDONED WELL
WATERSTONE WELL
CO-1 RIM:1121.37 INV:1110.50
PR. 8" DIP
72.33' of 4" @ 4.15%
CO-2 RIM:1122.01 INV:1113.50
8" RJ DI 45° BEND
PR. 8" WATER
61.88' of 4" @ 4.31%
PR. 8" RJ DI TEE
UNDG. POWER TO WELLS (TYP.)
10' BUILDING SETBACK
AREA 2.141 ACRES
PARCEL ID: 08098 001001, 08098 001002 08098 001003, 08098 001004
CITY OF FLOWERY BRANCH GEORGIA
DEED BOOK 9253, PAGE 463
PLAT BOOK 876, PAGE 1
*LIMITS OF DISTURBANCE
0.92 AC (ON-SITE)
0.14 AC (OFF-SITE)
±1.06 AC (TOTAL)
75' IMPERVIOUS BUFFER
Ø48" ISOLATED MANHOLE FOR CHEMICAL SPILL CONTAINMENT - ANY SPILLS TO BE REMOVED BY VACUUM TRUCK. THIS MH IS NOT CONNECTED TO THE SANITARY SEWER SYSTEM.
PR. 8" WATER
8" RJ DI 45° BEND
PR. RECEIVING PIT
EXISTING SS MH RIM:1113.61
INV IN: 1106.75 4"
INV IN: 1104.00 12"
INV OUT: 1103.93 12"
50' STREAM BUFFER
EX. 20' SEWER EASEMENT
EX. WETLANDS (APPROX.)
25' STREAM BUFFER
EX. 12" SAN. SEWER
EX. WETLANDS (APPROX.)
EX. STREAM CENTERLINE
30' BUILDING SETBACK
PR. HORIZONTAL DIRECTIONAL DRILL ±130 LF 8" HDPE DR-11 (DIPS) WATER MAIN. PROVIDE RESTRAINED HDPExMJ TRANSITION COUPLINGS ON EITHER END TO CONTINUE PIPE MATERIAL AS DUCTILE.
PERMANENT UTILITY EASEMENT
CONTRACTOR SHALL REMOVE EX. EVERGREEN SHRUBS, VEGETATION, AND CREPE MYRTLE TREE & PROVIDE REPLACEMENT OF ALL LANDSCAPING TO MATCH EXISTING.
PR. CONNECTION TO EX. WATER MAIN W/ 8"x6" RJ DI REDUCER, RJ DI BENDS, AND 6" TAPPING SLEEVE & VALVE
EX. FIRE HYDRANT
EX. 6" WATER LINE
PR. LAUNCHING PIT
8" RJ DI 90° BEND
TEMPORARY CONSTRUCTION EASEMENT
PARCEL ID: 08098 01009 KOSWIRE INC. 4600 CANTRELL ROAD FLOWERY BRANCH, GA 30542 26.72 ACRES
PARCEL ID: 08098A000206 WATER STONE CROSSING COMMUNITY ASSOCIATION 4611 BEACON RIDGE LANE FLOWERY BRANCH, GA 30542 15.52 ACRES
PARCEL ID: 08098A000206 WATER STONE CROSSING COMMUNITY ASSOC INC DEED BOOK 4312, PAGE 80 PLAT BOOK 816, PAGE 154A
EX. UNDG. POWER
EX. FIBER OPTIC LINE
EX. IRRIGATION WATER LINE
EX. STONE FENCE POST (TYP.)
VIREO DR
10' BUILDING SETBACK
96" CMP IE:1107.85
96" CMP IE:1107.13
96" CMP IE:1108.39
96" CMP IE:1108.52
18" CMP IE:1116.56
SSMH TOP: 1116.13 IE: 1103.71 12" PVC IE: 1103.35 12" PVC
SSMH TOP: 1113.61 IE: 1104.00 12" PVC IE: 1103.93 12" PVC
SSMH TOP: 1117.09 IE: 1106.33 8" PVC IE: 1104.93 12" PVC IE: 1104.92 12" PVC
SSMH TOP: 1120.41 IE: 1105.24 12" PVC IE: 1105.20 12" PVC
SWCB TOP: 1122.40 IE: 1116.80 18" CMP SSMH TOP: 1122.27 IE: 1107.85 8" PVC
DWCB TOP: 1119.00 IE: 1114.12 18" RCP
DWCB TOP: 1119.29 IE: 1113.91 18" RCP IE: 1113.85 18" CMP
18" RCP IE:1111.93
18" RCP IE:1118.84
15" RCP IE:1118.06
15" RCP IE:1117.34
18" RCP IE:1124.92
18" RCP IE:1123.17
18" RCP IE:1122.91
15" CMP IE:1121.23
15" CMP IE:1121.03
1/2" IPF W/ 1/2" RB W/ CAP
1" IPF (6.25 S OF RJ)
GRAPHIC SCALE 1" = 20'
20' 10' 0' 20'

KEYED NOTE:

① PIPE INSTALLED BEYOND BACKFLOW VAULT TO BE PAID FOR VIA LINEAR FOOT LINE ITEMS - NOT TO BE INCLUDED UNDER LUMP SUM WELL SITE IMPROVEMENTS ITEM.

UTILITY NOTES:

1. THE CONTRACTOR SHALL PROVIDE 72 HOUR NOTICE TO THE UTILITIES PROTECTION CENTER PRIOR TO CONSTRUCTION COMMENCEMENT OR EXCAVATION. THE CONTRACTOR SHALL PROVIDE ADEQUATE PROTECTION FOR ALL EXISTING UTILITIES WITHIN THE CONSTRUCTION AREA AND REPAIR ANY UTILITIES DAMAGED DURING CONSTRUCTION AT NO COST TO THE OWNER.
2. THE CONTRACTOR SHALL FIELD VERIFY LOCATION AND SIZE OF ALL EXISTING UTILITIES WITHIN THE PROJECT AREA. THE CONTRACTOR SHALL COORDINATE WITH UTILITY OWNERS ON ALL CONFLICTS.
3. THE CONTRACTOR SHALL VERIFY ALL DIMENSIONS AND LOCATIONS OF PROPOSED UTILITIES AND COORDINATE WITH ALL APPLICABLE PLANS FOR THE PROJECT. THE CONTRACTOR SHALL BE RESPONSIBLE FOR PROPER PLACEMENT AND FIT OF ALL PROPOSED UTILITIES. IF ANY DISCREPANCIES ARE DISCOVERED, NOTIFY THE ENGINEER IN WRITING WITHIN 24 HOURS.
4. TEN (10') FOOT HORIZONTAL & EIGHTEEN (18") INCH VERTICAL SEPARATION SHALL BE MAINTAINED BETWEEN ALL PROPOSED POTABLE WATER MAINS AND SANITARY SEWER MAINS.
5. FOUR (4') FOOT MINIMUM COVER SHALL BE MAINTAINED ABOVE ALL PROPOSED WATER MAINS AND SERVICE CONNECTIONS.
6. ALL SANITARY SEWER CONSTRUCTION SHALL COMPLY WITH ALL LOCAL STANDARDS AND SPECIFICATIONS.
7. THE CONTRACTOR SHALL ADJUST THE TOPS OF ALL EXISTING AND PROPOSED UTILITY STRUCTURES TO MATCH FINAL GRADE ELEVATIONS.
8. SEE MEP DESIGN SHEETS FOR EXACT PLACEMENT OF SPECIFIED UTILITIES.
9. ALL PROPOSED WATER MAIN PIPE & FITTINGS SHALL HAVE RESTRAINED JOINTS AND HAVE CONC. THRUST BLOCKING INSTALLED.

ESG ENGINEERING
6400 Peake Rd
Macon, GA 31210
Ph: (478) 474-4996
Fax: (478) 474-5045

GROUNDWATER WELLS #4 & #5

FOR THE CITY OF FLOWERY BRANCH

REVISIONS

NO.	DESCRIPTION	DATE
1	ESPC SHEETS	11-7-25
2	BID SET OF PLANS	12-1-25
3	REVISED WITH CITY COMMENTS	12-5-25

BID SET

GEORGIA REGISTERED No. PE046341 PROFESSIONAL ENGINEER ANDREW D SWICEGOOD

DRAWN BY: DSC
CHECKED BY: ADS
DATE: OCT 2025
SCALE: SEE SCALE

CONTENT:

CIVIL:
UTILITY PLAN

SHEET NO: C4.0

GEORGIA811 www.Georgia811.com

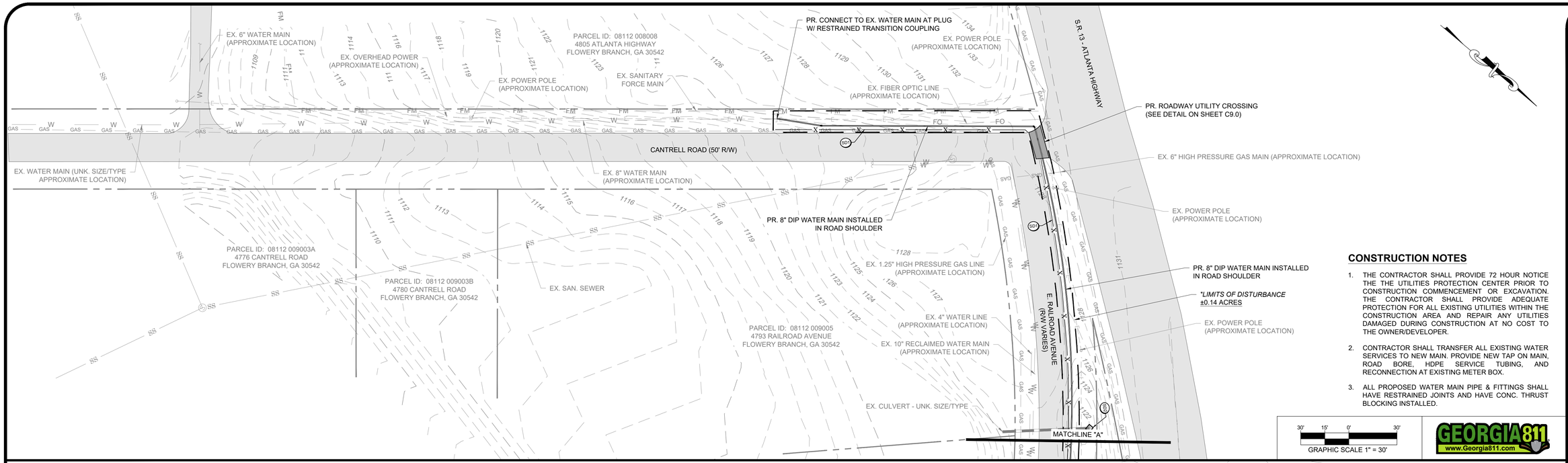

CONSTRUCTION NOTES

1. THE CONTRACTOR SHALL PROVIDE 72 HOUR NOTICE THE THE UTILITIES PROTECTION CENTER PRIOR TO CONSTRUCTION COMMENCEMENT OR EXCAVATION. THE CONTRACTOR SHALL PROVIDE ADEQUATE PROTECTION FOR ALL EXISTING UTILITIES WITHIN THE CONSTRUCTION AREA AND REPAIR ANY UTILITIES DAMAGED DURING CONSTRUCTION AT NO COST TO THE OWNER/DEVELOPER.
2. CONTRACTOR SHALL TRANSFER ALL EXISTING WATER SERVICES TO NEW MAIN. PROVIDE NEW TAP ON MAIN, ROAD BORE, HDPE SERVICE TUBING, AND RECONNECTION AT EXISTING METER BOX.
3. ALL PROPOSED WATER MAIN PIPE & FITTINGS SHALL HAVE RESTRAINED JOINTS AND HAVE CONC. THRUST BLOCKING INSTALLED.

GEORGIA811 www.Georgia811.com

*DISTURBED AREA CALCULATIONS:

PROJECT SITE: 2.14 AC
TOTAL DISTURBED AREA: 1.06 AC

DISTURBED AREA (OFF SITE): 0.14 AC
DISTURBED AREA (ON SITE): 0.92 AC
DISTURBED AREA = 0.92 AC / 2.14 AC = 43% OF PROJECT SITE
< 50% GOOD

IMPERVIOUS AREA = 1400 SF -> 0.032 AC / 1.06 AC = 3.0%

<50% GOOD
<15% GOOD

ESG ENGINEERING
6400 Peake Rd
Macon, GA 31210
Ph: (478) 474-4996
Fax: (478) 474-5045

GROUNDWATER WELLS #4 & #5

FOR THE
CITY OF FLOWERY BRANCH

REVISIONS

NO.	DESCRIPTION	DATE
1	ESPC SHEETS	11-7-25
2	BID SET OF PLANS	12-1-25
3	REVISED WITH CITY COMMENTS	12-5-25

BID SET

GEORGIA REGISTERED No. PE046341 PROFESSIONAL ENGINEER ANDREW D SWICEGOOD

DRAWN BY: DSC
CHECKED BY: ADS
DATE: OCT 2025
SCALE: SEE SCALE

CONTENT:

CIVIL:
WATER MAIN EXT.

SHEET NO: 2 3
C4.1

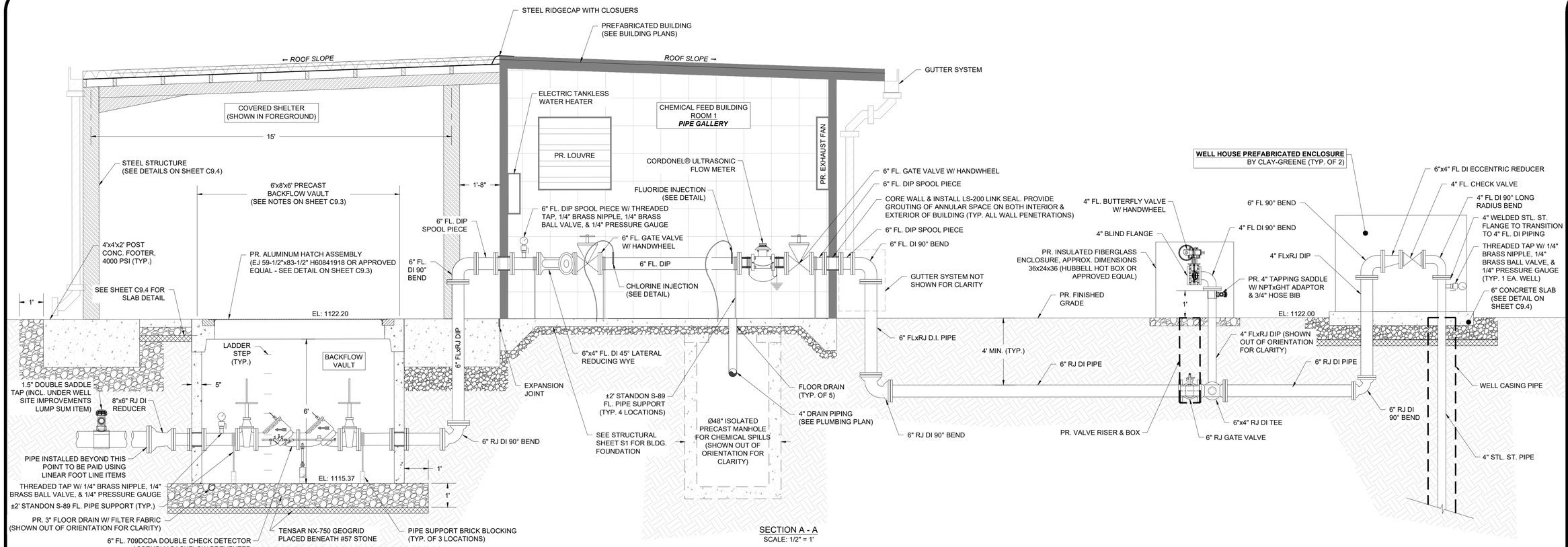

SECTION A - A
SCALE: 1/2" = 1'

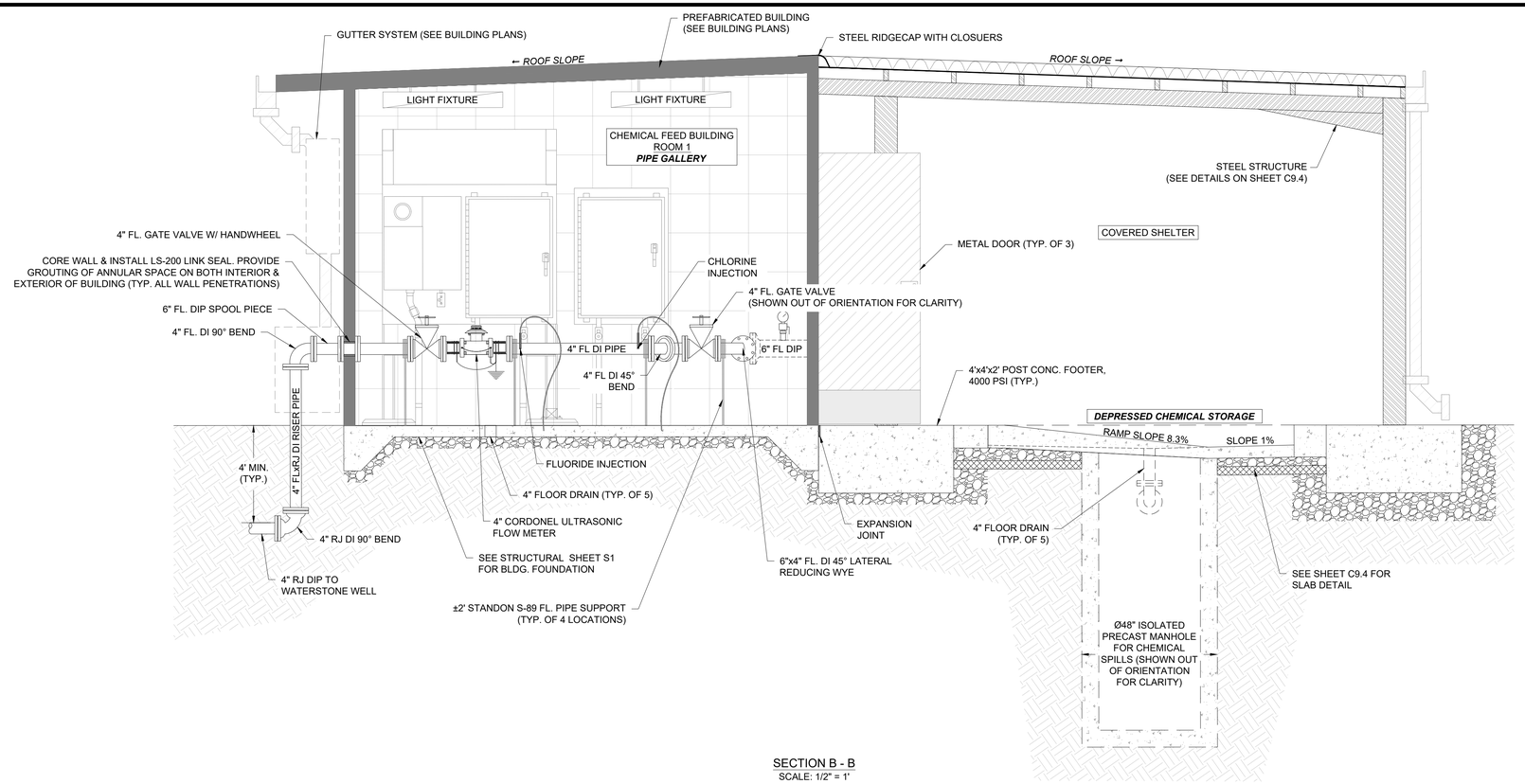

SECTION B - B
SCALE: 1/2" = 1'

ESG ENGINEERING
6400 Peake Rd
Macon, GA 31210
Ph: (478) 474-4996
Fax: (478) 474-5045

GROUNDWATER WELLS #4 & #5

FOR THE
CITY OF FLOWERY BRANCH

REVISIONS

NO.	DESCRIPTION	DATE
1	ESPC SHEETS	11-7-25
2	BID SET OF PLANS	12-1-25
3	REVISED WITH CITY COMMENTS	12-5-25

BID SET

GEORGIA REGISTERED No. PE046341 PROFESSIONAL ENGINEER ANDREW D SWICEGOOD

DRAWN BY: JDM
CHECKED BY: ADS
DATE: OCT 2025
SCALE: SEE SCALE

CONTENT:

CIVIL:
BUILDING ELEVATIONS

SHEET NO: 2 3

C5.0

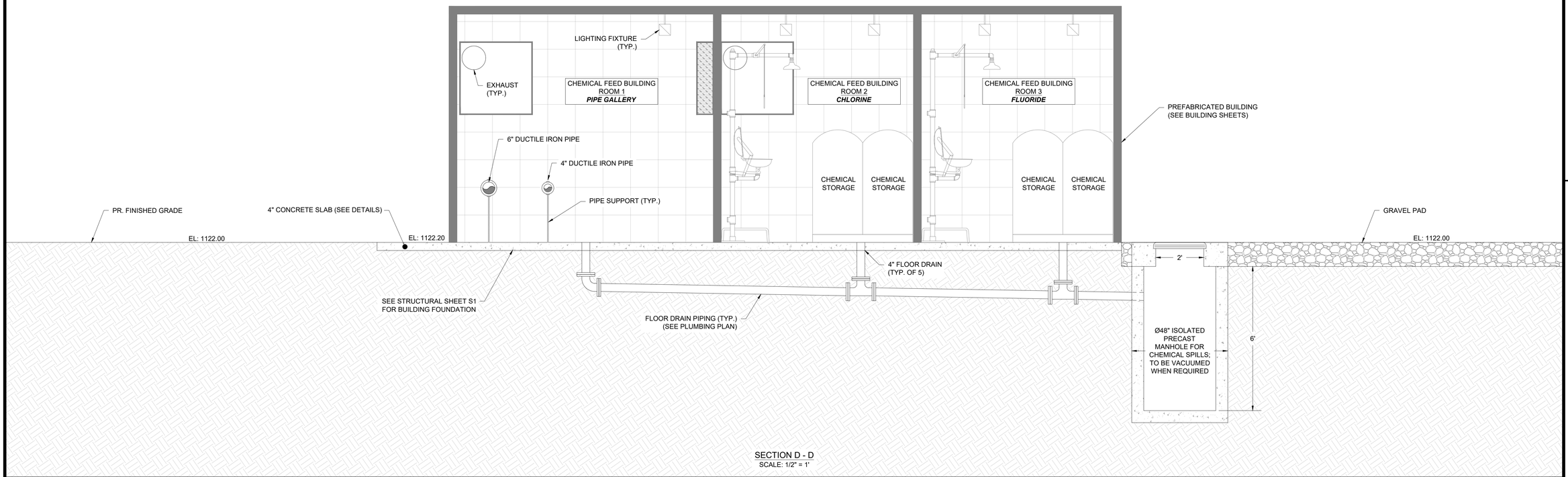

SECTION D - D
SCALE: 1/2" = 1'

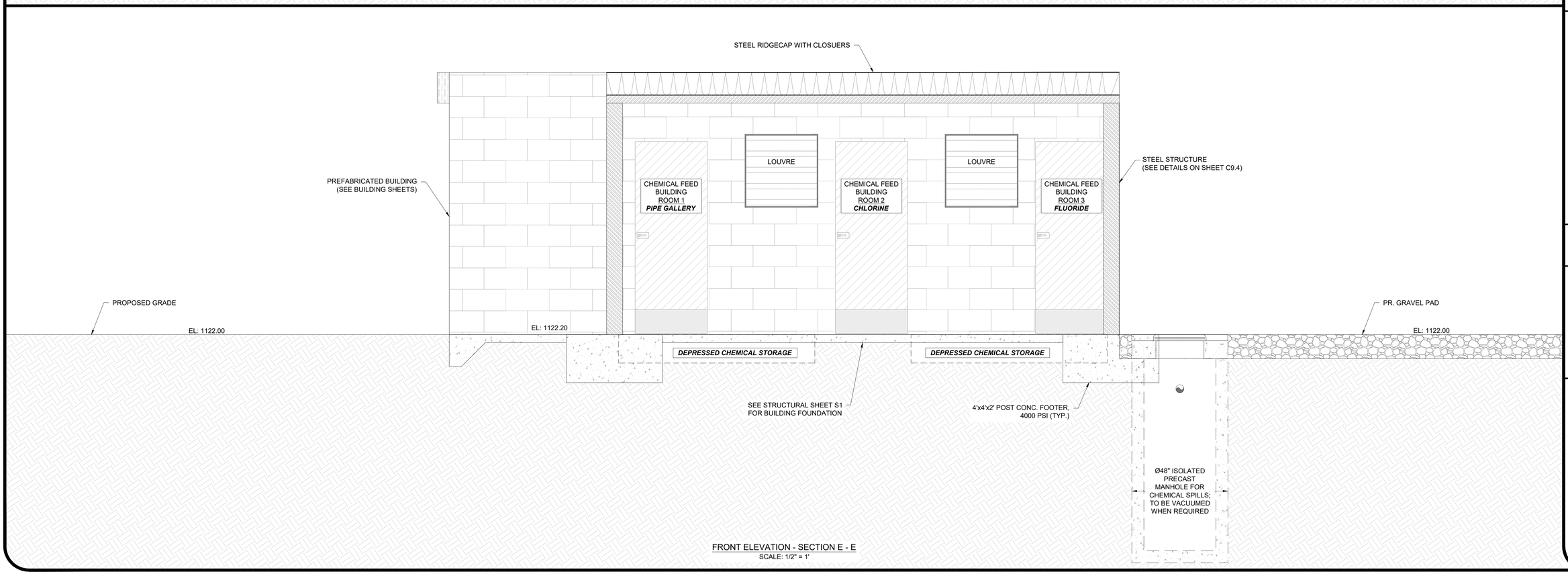

FRONT ELEVATION - SECTION E - E
SCALE: 1/2" = 1'

ESG ENGINEERING
6400 Peake Rd
Macon, GA 31210
Ph: (478) 474-4996
Fax: (478) 474-5045

GROUNDWATER WELLS #4 & #5

FOR THE
CITY OF FLOWERY BRANCH

REVISIONS

NO.	DESCRIPTION	DATE
1	ESPC SHEETS	11-7-25
2	BID SET OF PLANS	12-1-25
3	REVISED WITH CITY COMMENTS	12-5-25
4	ADDENDUM #1	12-8-25

BID SET

GEORGIA REGISTERED No. PE046341 PROFESSIONAL ENGINEER ANDREW D SWICEGOOD

DRAWN BY: JDM
CHECKED BY: ADS
DATE: OCT 2025
SCALE: SEE SCALE

CONTENT:

CIVIL:
BUILDING ELEVATIONS

SHEET NO: 4

C5.2

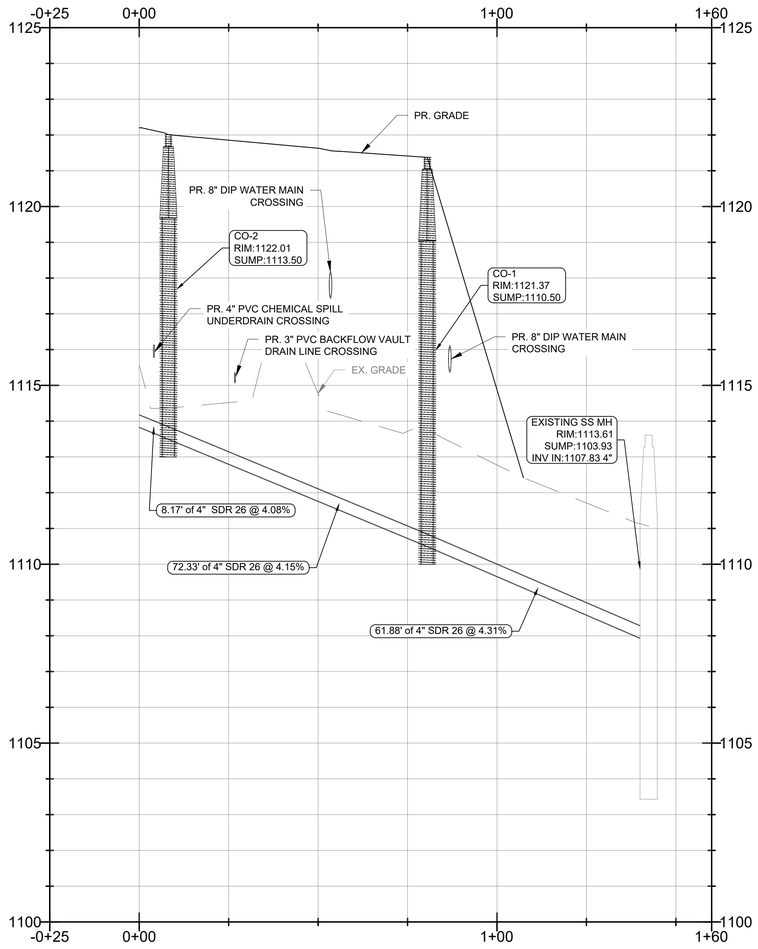

SANITARY SEWER ALIGNMENT

ESG ENGINEERING
6400 Peake Rd
Macon, GA 31210
Ph: (478) 474-4996
Fax: (478) 474-5045

GROUNDWATER WELLS #4 & #5

FOR THE
CITY OF FLOWERY BRANCH

REVISIONS

NO.	DESCRIPTION	DATE
1	ESPC SHEETS	11-7-25
2	BID SET OF PLANS	12-1-25
3	REVISED WITH CITY COMMENTS	12-5-25

BID SET

GEORGIA REGISTERED No. PEO46341 PROFESSIONAL ENGINEER ANDREW D SWICEGOOD

DRAWN BY: DSC
CHECKED BY: ADS
DATE: OCT 2025
SCALE: H: 1" = 20'
V: 1" = 2'

CONTENT:

CIVIL:
SANITARY SEWER PROFILE

SHEET NO: 2 3

C5.3

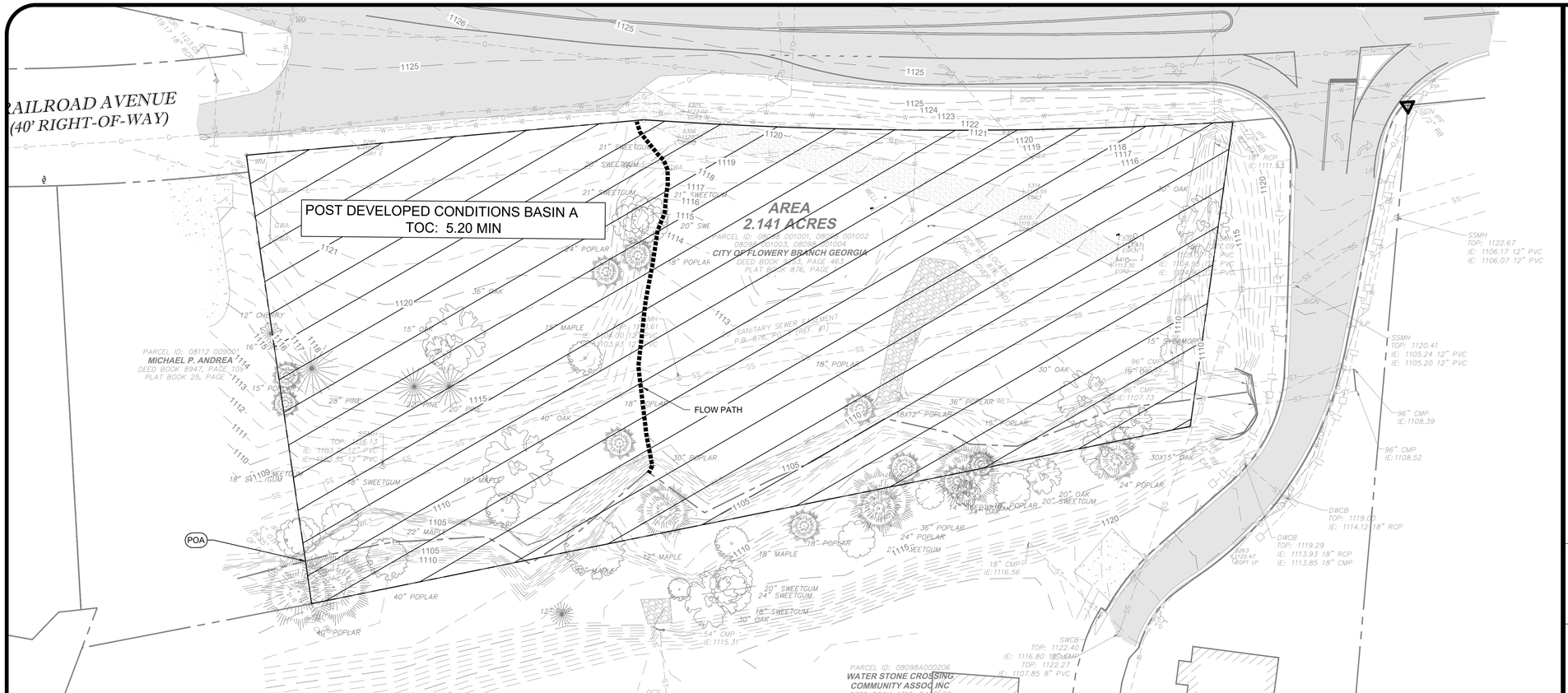

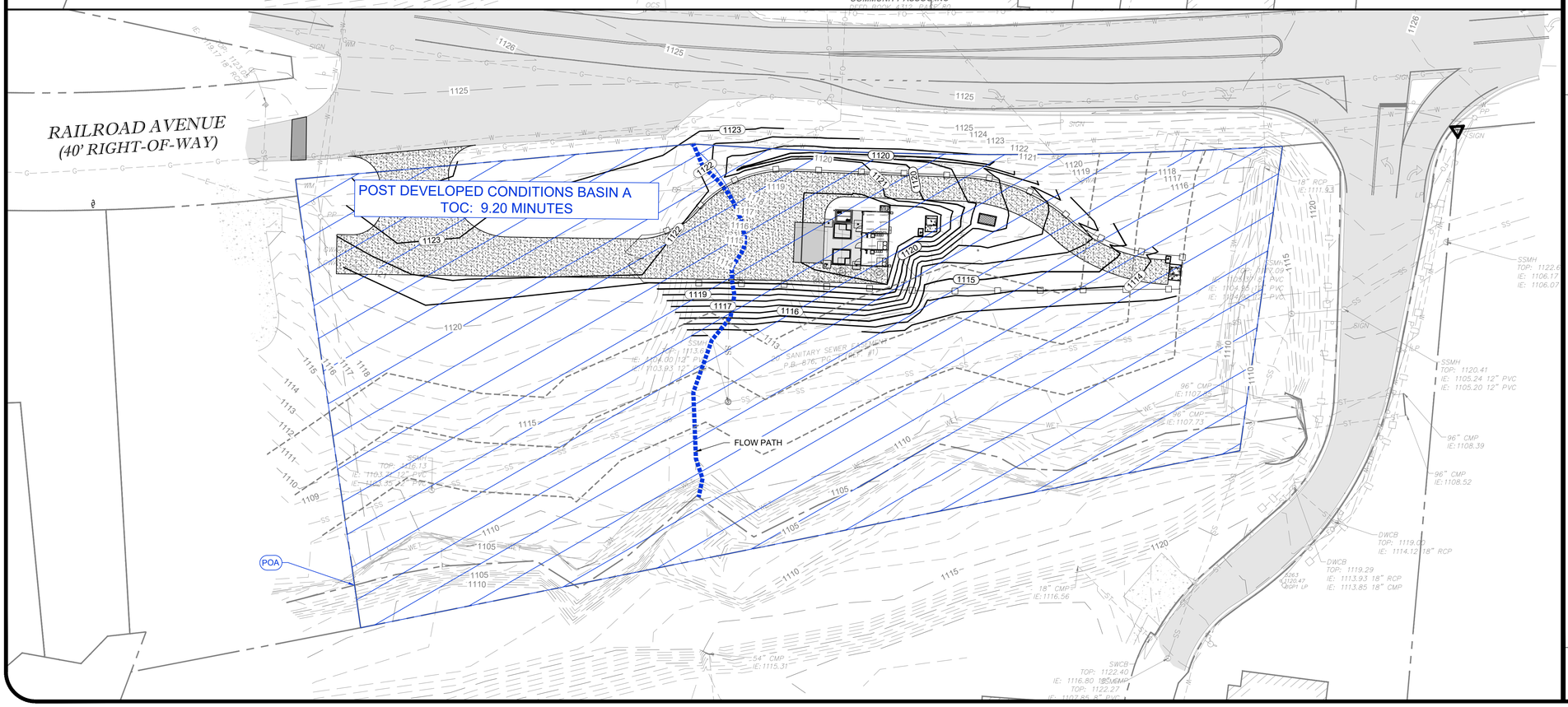

SITE INFORMATION	
PROJECT ADDRESS	4745 ATLANTA HWY
PARCEL NUMBER	08098 001001 THRU 08098 001004
PARCEL ZONING	H-B
PROJECT AREA	2.14 ACRES
BUILDING SETBACK	
FRONT	NONE
REAR	30'
SIDE	10'
LANDSCAPE SETBACK	
FRONT	10'
REAR	30'
SIDE	NONE

SITE DRAINAGE DESCRIPTION:

THE PROPOSED DEVELOPMENT FOR THE CITY OF FLOWERY BRANCH, GEORGIA IS LOCATED AT 4745 ATLANTA HIGHWAY (SR13). THE PROJECT AREA CONSISTS OF 2.14 ACRES OF OPEN AREA. THE PRE-DEVELOPED CONDITION CONSIST OF ONE DRAINAGE BASIN. BASIN A SHEET FLOWS TOWARDS THE SOUTH AND DISCHARGES ALONG THE SOUTH PROPERTY LINE INTO THE CREEK. THE PROPOSED DEVELOPMENT WILL CONSIST OF ±1600 SQFT OF COVERED OUTDOOR SPACE AND WELL HOUSE BUILDING FOR THE REHABILITATION OF TWO WELLS PURCHASED BY FLOWERY BRANCH FROM THE STATE OF GEORGIA. THE WELL HOUSE BUILDING IS A THREE ROOM STRUCTURE WITH AN ATTACHED POLE BARN. THE WELL HOUSE BUILDING IS THREE SEPARATE ROOMS; ONE PIPE GALLERY AND THE REMAINING ROOMS SEPARATE CHEMICAL FEED ROOMS. A SMALL PORTION OF THE PROPERTY WILL HAVE ASPHALT FOR LOADING/UNLOADING. TWO SMALL CONCRETE BASINS WILL SUPPORT CHEMICAL STORAGE. THIS STRUCTURE IS UTILITARIAN IN NATURE. THE POST-DEVELOPED CONDITIONS CONSIST OF ONE DRAINAGE BASIN. BASIN "A" CONTINUES TO SHEET FLOW IN THE SAME PATTERN AS BEFORE BUT WITH A SLOWER RELEASE DO TO SUBTLER GRADE CHANGES ACROSS THE SITE. IT DRAINS TO THE SOUTH OF THE PROPERTY AND ENTERS THE CREEK IN THE SAME FASHION. THE POST DEVELOPED PROPERTY CONDITIONS REDUCES STORMWATER RUNOFF AS REQUIRED BY LOCAL AND/OR STATE STANDARDS AND REGULATIONS.

FLOODPLAIN DESCRIPTION:

THE PROPERTY SHOWN HEREON IS LOCATED IN FLOOD ZONE "X" AS PER FLOOD INSURANCE RATE MAP FOR CITY OF FLOWERY BRANCH 130408, AND SHOWN ON MAP NO. 13293C0089D. WITH AN EFFECTIVE DATE OF 09/25/2009. FLOOD ZONE "X" DENOTES AN AREA OF MINIMAL FLOOD HAZARD.

HYDROLOGIC BASIN DESCRIPTION:

PRE-DEVELOPED BASIN
BASIN A: 2.14 ACRES (69) - T_C: 5.20 MINS 25-YR PEAK RUNOFF: 9.93 CFS
IMPERVIOUS AREA: 0.00 AC (HSG-B)
OPEN AREA (GOOD CONDITION): 2.14 AC (HSG-B)
WOODED AREA (GOOD COVER): 0.00 AC (HSG-B)

POST-DEVELOPED BASIN
BASIN A TO STORM SYSTEM 2.14 ACRES (61) - T_C: 9.20 MINS 25-YR PEAK RUNOFF: 6.84 CFS
IMPERVIOUS AREA: 0.04 AC (HSG-B)
OPEN AREA (GOOD CONDITION): 2.10 AC (HSG-B)
WOODED AREA (GOOD COVER): 0.00 AC (HSG-B)

DISTURBED AREA NOTES

1. THE TOTAL PROJECT SITE IS 2.14 ACRES.
2. THE TOTAL ON-SITE DISTURBED AREA IS 0.92 ACRES (WELL SITE PROJECT).
3. THE TOTAL OFF-SITE DISTURBED AREA IS 0.14 ACRES (WATER MAIN EXTENSION.
4. THE TOTAL PROJECT DISTURBED AREA (INCLUDING ON- AND OFF-SITE AREAS) IS 1.06 ACRES.
5. DUE TO THE PROP. ESC MEASURES AND TYPE OF CONSTRUCTION BEING LINEAR, SHALLOW TRENCHING WORK, THE 0.14 ACRES OF "OFF-SITE" AREA IS NOT BEING CONSIDERED AS PART OF THE ON-SITE HYDROLOGY ANALYSIS DUE TO THE INFINITE NUMBER OF FLOW PATHS FOR RUNOFF LEAVING THIS AREA OF THE PROJECT. THEREFORE, THE TRUE "ON-SITE" DISTURBED AREA IS ONLY 0.92 ACRES AND DOES NOT REQUIRE WATER QUALITY MITIGATION MEASURES.

30' 15' 0' 30'
GRAPHIC SCALE 1" = 30'

GEORGIA811 www.Georgia811.com

ESG ENGINEERING
6400 Peake Rd
Macon, GA 31210
Ph: (478) 474-4996
Fax: (478) 474-5045

GROUNDWATER WELLS #4 & #5

FOR THE
CITY OF FLOWERY BRANCH

REVISIONS

NO.	DESCRIPTION	DATE
1	ESPC SHEETS	11-7-25
2	BID SET OF PLANS	12-1-25
3	REVISED WITH CITY COMMENTS	12-5-25

BID SET

GEORGIA REGISTERED No. PE046341 PROFESSIONAL ENGINEER ANDREW D SWICEGOOD

DRAWN BY: DSC
CHECKED BY: ADS
DATE: OCT 2025
SCALE: SEE SCALE

CONTENT:
CIVIL:
HYDROLOGY PLAN

SHEET NO: 4
C6.0

GENERAL NPDES PERMIT NO. GAR100001

30 A) PERMITTEE REQUIREMENTS.

(1). EACH DAY WHEN ANY TYPE OF CONSTRUCTION ACTIVITY HAS TAKEN PLACE AT A PRIMARY PERMITTEE'S SITE, CERTIFIED PERSONNEL PROVIDED BY THE PRIMARY PERMITTEE SHALL INSPECT: (A) ALL AREAS AT THE PRIMARY PERMITTEE'S SITE WHERE PETROLEUM PRODUCTS ARE STORED, USED, OR HANDLED FOR SPILLS AND LEAKS FROM VEHICLES AND EQUIPMENT AND (B) ALL LOCATIONS AT THE PRIMARY PERMITTEE'S SITE WHERE VEHICLES ENTER OR EXIT THE SITE FOR EVIDENCE OF OFF-SITE SEDIMENT TRACKING. THESE INSPECTIONS MUST BE CONDUCTED UNTIL A NOTICE OF TERMINATION IS SUBMITTED.

(2). MEASURE AND RECORD RAINFALL WITHIN DISTURBED AREAS OF THE SITE THAT HAVE NOT MET FINAL STABILIZATION ONCE EVERY 24 HOURS EXCEPT ANY NON-WORKING SATURDAY, NON-WORKING SUNDAY AND NON-WORKING FEDERAL HOLIDAY. THE DATA COLLECTED FOR THE PURPOSE OF COMPLIANCE WITH THIS PERMIT SHALL BE REPRESENTATIVE OF THE MONITORED ACTIVITY. MEASUREMENT OF RAINFALL MAY BE SUSPENDED IF ALL AREAS OF THE SITE HAVE UNDERGONE FINAL STABILIZATION OR ESTABLISHED A CROP OF ANNUAL VEGETATION AND A SEEDING OF TARGET PERENNIALS APPROPRIATE FOR THE REGION.

(3). CERTIFIED PERSONNEL (PROVIDED BY THE PRIMARY PERMITTEE) SHALL INSPECT THE FOLLOWING AT LEAST ONCE EVERY SEVEN (7) CALENDAR DAYS AND WITHIN 24 HOURS OF THE END OF A STORM THAT IS 0.5 INCHES RAINFALL OR GREATER (UNLESS SUCH STORM ENDS AFTER 5:00 PM ON ANY FRIDAY OR ON ANY NON-WORKING SATURDAY, NON-WORKING SUNDAY OR ANY NON-WORKING FEDERAL HOLIDAY IN WHICH CASE THE INSPECTION SHALL BE COMPLETED BY THE END OF THE NEXT BUSINESS DAY AND/OR WORKING DAY, WHICHEVER OCCURS FIRST): (A) DISTURBED AREAS OF THE PRIMARY PERMITTEE'S CONSTRUCTION SITE; (B) AREAS USED BY THE PRIMARY PERMITTEE FOR STORAGE OF MATERIALS THAT ARE EXPOSED TO PRECIPITATION; AND (C) STRUCTURALCONTROL MEASURES. EROSION AND SEDIMENT CONTROL MEASURES IDENTIFIED IN THE PLAN APPLICABLE TO THE PRIMARY PERMITTEE'S SITE SHALL BE OBSERVED TO ENSURE THAT THEY ARE OPERATING CORRECTLY. WHERE DISCHARGE LOCATIONS OR POINTS ARE ACCESSIBLE, THEY SHALL BE INSPECTED TO ASCERTAIN WHETHER EROSION CONTROL MEASURES ARE EFFECTIVE IN PREVENTING SIGNIFICANT IMPACTS TO RECEIVING WATER(S). FOR AREAS OF A SITE THAT HAVE UNDERGONE FINAL STABILIZATION OR ESTABLISHED A CROP OF ANNUAL VEGETATION AND A SEEDING OF TARGET PERENNIALS APPROPRIATE FOR THE REGION, THE PERMITTEE MUST COMPLY WITH PART IV.D.4.A.(4). THESE INSPECTIONS MUST BE CONDUCTED UNTIL A NOTICE OF TERMINATION IS SUBMITTED.

(4). CERTIFIED PERSONNEL (PROVIDED BY THE PRIMARY PERMITTEE) SHALL INSPECT AT LEAST ONCE PER MONTH DURING THE TERM OF THIS PERMIT (I.E., UNTIL A NOTICE OF TERMINATION HAS BEEN SUBMITTED) THE AREAS OF THE SITE THAT HAVE UNDERGONE FINAL STABILIZATION OR ESTABLISHED A CROP OF ANNUAL VEGETATION AND A SEEDING OF TARGET PERENNIALS APPROPRIATE FOR THE REGION. THESE AREAS SHALL BE INSPECTED FOR EVIDENCE OF, OR THE POTENTIAL FOR, POLLUTANTS ENTERING THE DRAINAGE SYSTEM AND THE RECEIVING WATER(S). EROSION AND SEDIMENT CONTROL MEASURES IDENTIFIED IN THE PLAN SHALL BE OBSERVED TO ENSURE THAT THEY ARE OPERATING CORRECTLY. WHERE DISCHARGE LOCATIONS OR POINTS ARE ACCESSIBLE, THEY SHALL BE INSPECTED TO ASCERTAIN WHETHER EROSION CONTROL MEASURES ARE EFFECTIVE IN PREVENTING SIGNIFICANT IMPACTS TO RECEIVING WATER(S).

(5). BASED ON THE RESULTS OF EACH INSPECTION, THE SITE DESCRIPTION AND THE POLLUTION PREVENTION AND CONTROL MEASURES IDENTIFIED IN THE EROSION, SEDIMENTATION AND POLLUTION CONTROL PLAN, THE PLAN SHALL BE REVISED AS APPROPRIATE NOT LATER THAN SEVEN (7) CALENDAR DAYS FOLLOWING EACH INSPECTION. IMPLEMENTATION OF SUCH CHANGES SHALL BE MADE AS SOON AS PRACTICAL BUT IN NO CASE LATER THAN SEVEN (7) CALENDAR DAYS FOLLOWING EACH INSPECTION.

(6). A REPORT OF EACH INSPECTION THAT INCLUDES THE NAME(S) OF CERTIFIED PERSONNEL MAKING EACH INSPECTION, THE DATE(S) OF EACH INSPECTION, CONSTRUCTION PHASE (I.E., INITIAL, INTERMEDIATE OR FINAL), MAJOR OBSERVATIONS RELATING TO THE IMPLEMENTATION OF THE EROSION, SEDIMENTATION AND POLLUTION CONTROL PLAN, AND ACTIONS TAKEN IN ACCORDANCE WITH PART IV.D.4.A.(5). OF THE PERMIT SHALL BE MADE AND RETAINED AT THE SITE OR BE READILY AVAILABLE AT A DESIGNATED ALTERNATE LOCATION UNTIL THE ENTIRE SITE OR THAT PORTION OF A CONSTRUCTION SITE THAT HAS BEEN PHASED HAS UNDERGONE FINAL STABILIZATION AND A NOTICE OF TERMINATION IS SUBMITTED TO EPD. SUCH REPORTS SHALL BE READILY AVAILABLE BY END OF THE SECOND BUSINESS DAY AND/OR WORKING DAY AND SHALL IDENTIFY ALL INCIDENTS OF BEST MANAGEMENT PRACTICES THAT HAVE NOT BEEN PROPERLY INSTALLED AND/OR MAINTAINED AS DESCRIBED IN THE PLAN. WHERE THE REPORT DOES NOT IDENTIFY ANY INCIDENTS, THE INSPECTION REPORT SHALL CONTAIN A CERTIFICATION THAT THE BEST MANAGEMENT PRACTICES ARE IN COMPLIANCE WITH THE EROSION, SEDIMENTATION AND POLLUTION CONTROL PLAN. THE REPORT SHALL BE SIGNED IN ACCORDANCE WITH PART V.G.2. OF THIS PERMIT.

5. MAINTENANCE. THE PLAN SHALL INCLUDE A DESCRIPTION OF PROCEDURES TO ENSURE THE TIMELY MAINTENANCE OF VEGETATION, EROSION AND SEDIMENT CONTROL MEASURES AND OTHER PROTECTIVE MEASURES IDENTIFIED IN THE SITE PLAN.

33 6. SAMPLING REQUIREMENTS. THIS PERMIT REQUIRES THE MONITORING OF NEPHELOMETRIC TURBIDITY IN RECEIVING WATER(S) OR OUTFALLS IN ACCORDANCE WITH THIS PERMIT. THIS PARAGRAPH SHALL NOT APPLY TO ANY LAND DISTURBANCE ASSOCIATED WITH THE CONSTRUCTION OF SINGLE-FAMILY HOMES WHICH ARE NOT PART OF A SUBDIVISION OR PLANNED COMMON DEVELOPMENT UNLESS FIVE (5) ACRES OR MORE WILL BE DISTURBED. THE FOLLOWING PROCEDURES CONSTITUTE EPD'S GUIDELINES FOR SAMPLING TURBIDITY.

a. SAMPLING REQUIREMENTS SHALL INCLUDE THE FOLLOWING:

(1). A USGS TOPOGRAPHIC MAP, A TOPOGRAPHIC MAP OR A DRAWING (REFERRED TO AS A TOPOGRAPHIC MAP) THAT IS A SCALE EQUAL TO OR MORE DETAILED THAN A 1:24000 MAP SHOWING THE LOCATION OF THE SITE OR THE STAND ALONE CONSTRUCTION; (A) THE LOCATION OF ALL PERENNIAL AND INTERMITTENT STREAMS AND OTHER WATER BODIES AS SHOWN ON A USGS TOPOGRAPHIC MAP, AND ALL OTHER PERENNIAL AND INTERMITTENT STREAMS AND OTHER WATER BODIES LOCATED DURING MANDATORY FIELD VERIFICATION, INTO WHICH THE STORMWATER IS DISCHARGED AND (B) THE RECEIVING WATER AND/OR OUTFALL SAMPLING LOCATIONS. WHEN THE PERMITTEE HAS CHOSEN TO USE A USGS TOPOGRAPHIC MAP AND THE RECEIVING WATER(S) IS NOT SHOWN ON THE USGS TOPOGRAPHIC MAP, THE LOCATION OF THERECEIVING WATER(S) MUST BE HAND-DRAWN ON THE USGS TOPOGRAPHIC MAP FROM WHERE THE STORMWATER(S) ENTERS THE RECEIVING WATER(S) TO THE POINT WHERE THE RECEIVING WATER(S) COMBINES WITH THE FIRST BLUE LINE STREAM SHOWN ON THE USGSTOPOGRAPHIC MAP;

(2). A WRITTEN NARRATIVE OF SITE SPECIFIC ANALYTICAL METHODS USED TO COLLECT, HANDLE AND ANALYZE THE SAMPLES INCLUDING QUALITY CONTROL/QUALITY ASSURANCE PROCEDURES. THIS NARRATIVE MUST INCLUDE PRECISE SAMPLING METHODOLOGY FOR EACH SAMPLING LOCATION;

(3). WHEN THE PERMITTEE HAS DETERMINED THAT SOME OR ALL OUTFALLS WILL BE SAMPLED, A RATIONALE MUST BE INCLUDED ON THE PLAN FOR THE NTU LIMIT(S) SELECTED FROM APPENDIX B. THIS RATIONALE MUST INCLUDE THE SIZE OF THE CONSTRUCTION SITE, THE CALCULATION OF THE SIZE OF THE SURFACE WATER DRAINAGE AREA, AND THE TYPE OF RECEIVING WATER(S) (I.E., TROUT STREAM OR SUPPORTING WARM WATER FISHERIES); AND

(4). ANY ADDITIONAL INFORMATION EPD DETERMINES NECESSARY TO BE PART OF THE PLAN. EPD WILL PROVIDE WRITTEN NOTICE TO THE PERMITTEE OF THE INFORMATION NECESSARY AND THE TIME LINE FOR SUBMITTAL.

b. SAMPLE TYPE. ALL SAMPLING SHALL BE COLLECTED BY "GRAB SAMPLES" AND THE ANALYSIS OF THESE SAMPLES MUST BE CONDUCTED IN ACCORDANCE WITH METHODOLOGY AND TEST PROCEDURES ESTABLISHED BY 40 CFR PART 136 (UNLESS OTHER TEST PROCEDURES HAVE BEEN APPROVED); THE GUIDANCE DOCUMENT TITLED "NPDES STORM WATER SAMPLING GUIDANCE DOCUMENT,EPA 833-B-92-001" AND GUIDANCE DOCUMENTS THAT MAY BE PREPARED BY THE EPD.

(1). SAMPLE CONTAINERS SHOULD BE LABELED PRIOR TO COLLECTING THE SAMPLES.

(2). SAMPLES SHOULD BE WELL MIXED BEFORE TRANSFERRING TO A SECONDARY CONTAINER.

(3). LARGE MOUTH, WELL CLEANED AND RINSED GLASS OR PLASTIC JARS SHOULD BE USED FOR COLLECTING SAMPLES. THE JARS SHOULD BE CLEANED THOROUGHLY TO AVOID CONTAMINATION.

(4). MANUAL, AUTOMATIC OR RISING STAGE SAMPLING MAY BE UTILIZED. SAMPLES REQUIRED BY THIS PERMIT SHOULD BE ANALYZED IMMEDIATELY, BUT IN NO CASE LATER THAN 48 HOURS AFTER COLLECTION. HOWEVER, SAMPLES FROM AUTOMATIC SAMPLERS MUST BE COLLECTED NO LATER THAN THE NEXT BUSINESS DAY AFTER THEIR ACCUMULATION, UNLESS FLOW THROUGH AUTOMATED ANALYSIS IS UTILIZED. IF AUTOMATIC SAMPLING IS UTILIZED AND THE AUTOMATIC SAMPLER IS NOT ACTIVATED DURING THE QUALIFYING EVENT, THE PERMITTEE MUST UTILIZE MANUAL SAMPLING OR RISING STAGE SAMPLING DURING THE NEXT QUALIFYING EVENT. DILUTION OF SAMPLES IS NOT REQUIRED. SAMPLES MAY BE ANALYZED DIRECTLY WITH A PROPERLY CALIBRATED TURBIDIMETER. SAMPLES ARE NOT REQUIRED TO BE COOLED.

(5). SAMPLING AND ANALYSIS OF THE RECEIVING WATER(S) OR OUTFALLS BEYOND THE MINIMUM FREQUENCY STATED IN THIS PERMIT MUST BE REPORTED TO EPD AS SPECIFIED IN PART IV.E.

c. SAMPLING POINTS.

(1). FOR CONSTRUCTION ACTIVITIES THE PRIMARY PERMITTEE MUST SAMPLE ALL RECEIVING WATER(S), OR ALL OUTFALL(S), OR A COMBINATION OF RECEIVING WATER(S) AND OUTFALL(S). SAMPLES TAKEN FOR THE PURPOSE OF COMPLIANCE WITH THIS PERMIT SHALL BE REPRESENTATIVE OF THE MONITORED ACTIVITY AND REPRESENTATIVE OF THE WATER QUALITY OF THE RECEIVING WATER(S) AND/OR THE STORMWATER OUTFALLS USING THE FOLLOWING MINIMUM GUIDELINES:

(A). THE UPSTREAM SAMPLE FOR EACH RECEIVING WATER(S) MUST BE TAKEN IMMEDIATELY UPSTREAM OF THE CONFLUENCE OF THE FIRST STORMWATER DISCHARGE FROM THE PERMITTED ACTIVITY (I.E., THE DISCHARGE FARTHEST UPSTREAM AT THE SITE) BUT DOWNSTREAM OF ANY OTHER STORMWATER DISCHARGES NOT ASSOCIATED WITH THE PERMITTED ACTIVITY. WHERE APPROPRIATE, SEVERAL UPSTREAM SAMPLES FROM ACROSS THE RECEIVING WATER(S) MAY NEED TO BE TAKEN AND THE ARITHMETIC AVERAGE OF THE TURBIDITY OF THESE SAMPLES USED FOR THE UPSTREAM TURBIDITY

(B). THE DOWNSTREAM SAMPLE FOR EACH RECEIVING WATER(S) MUST BE TAKEN DOWNSTREAM OF THE CONFLUENCE OF THE LAST STORMWATER DISCHARGE FROM THE PERMITTED ACTIVITY (I.E., THE DISCHARGE FARTHEST DOWNSTREAM AT THE SITE) BUT UPSTREAM OF ANY OTHER STORMWATER DISCHARGE NOT ASSOCIATED WITH THE PERMITTED ACTIVITY. WHERE APPROPRIATE, SEVERAL DOWNSTREAM SAMPLES FROM ACROSS THE RECEIVING WATER(S) MAY NEED TO BE TAKEN AND THE ARITHMETIC AVERAGE OF THE TURBIDITY OF THESE SAMPLES USED FOR THE DOWNSTREAM TURBIDITY VALUE.

(C). IDEALLY THE SAMPLES SHOULD BE TAKEN FROM THE HORIZONTAL AND VERTICAL CENTER OF THE RECEIVING WATER(S) OR THE STORMWATER OUTFALL CHANNEL(S).

(D). CARE SHOULD BE TAKEN TO AVOID STIRRING THE BOTTOM SEDIMENTS IN THE RECEIVING WATER(S) OR IN THE OUTFALL STORMWATER CHANNEL.

(E). THE SAMPLING CONTAINER SHOULD BE HELD SO THAT THE OPENING FACES UPSTREAM.

(F). THE SAMPLES SHOULD BE KEPT FREE FROM FLOATING DEBRIS.

(G). PERMITTEES DO NOT HAVE TO SAMPLE SHEET FLOW THAT FLOWS ONTO UNDISTURBED NATURAL AREAS OR AREAS STABILIZED BY THE PROJECT. FOR PURPOSES OF THIS SECTION, STABILIZED SHALL MEAN, FOR UNPAVED AREAS AND AREAS NOT COVERED BY PERMANENT STRUCTURES AND AREAS LOCATED OUTSIDE THE WASTE DISPOSAL LIMITS OF A LANDFILL CELL THAT HAS BEEN CERTIFIED BY EPD FOR WASTE DISPOSAL, 100% OF THE SOIL SURFACE IS UNIFORMLY COVERED IN PERMANENT VEGETATION WITH A DENSITY OF 70% OR GREATER, OR LANDSCAPED ACCORDING TO THE PLAN (UNIFORMLY COVERED WITH LANDSCAPING MATERIALS IN PLANNED LANDSCAPED AREAS), OR EQUIVALENT PERMANENT STABILIZATION MEASURES AS DEFINED IN THE MANUAL (EXCLUDING A CROP OF ANNUAL VEGETATION AND A SEEDING OF TARGET CROP PERENNIALS APPROPRIATE FOR THE REGION).

(H). ALL SAMPLING PURSUANT TO THIS PERMIT MUST BE DONE IN SUCH A WAY (INCLUDING GENERALLY ACCEPTED SAMPLING METHODS, LOCATIONS, TIMING, AND FREQUENCY) AS TO ACCURATELY REFLECT WHETHER STORMWATER RUNOFF FROM THE CONSTRUCTION SITE IS IN COMPLIANCE WITH THE STANDARD SET FORTH IN PARTS OR III.D.4., WHICHEVER IS APPLICABLE.

31 d. SAMPLING FREQUENCY.

(1). THE PRIMARY PERMITTEE MUST SAMPLE IN ACCORDANCE WITH THE PLAN AT LEAST ONCE FOR EACH RAINFALL EVENT DESCRIBED BELOW. FOR A QUALIFYING EVENT, THE PERMITTEE SHALL SAMPLE AT THE BEGINNING OF ANY STORMWATER DISCHARGE TO A MONITORED RECEIVING WATER AND/OR FROM A MONITORED OUTFALL LOCATION WITHIN IN FORTY-FIVE (45) MINUTES OR AS SOON AS POSSIBLE.

(2). HOWEVER, WHERE MANUAL AND AUTOMATIC SAMPLING ARE IMPOSSIBLE (AS DEFINED IN THIS PERMIT), OR ARE BEYOND THE PERMITTEE'S CONTROL, THE PERMITTEE SHALL TAKE SAMPLES AS SOON AS POSSIBLE, BUT IN NO CASE MORE THAN TWELVE (12) HOURS AFTER THE BEGINNING OF THE STORMWATER DISCHARGE.

(3). SAMPLING BY THE PERMITTEE SHALL OCCUR FOR THE FOLLOWING QUALIFYING EVENTS:

(A). FOR EACH AREA OF THE SITE THAT DISCHARGES TO A RECEIVING WATER OR FROM AN OUTFALL, THE FIRST RAIN EVENT THAT REACHES OR EXCEEDS 0.5 INCH WITH A STORMWATER DISCHARGE THAT OCCURS DURING NORMAL BUSINESS HOURS AS DEFINED IN THIS PERMIT AFTER ALL CLEARING AND GRUBBING OPERATIONS HAVE BEEN COMPLETED, BUT PRIOR TO COMPLETION OF MASS GRADING OPERATIONS, IN THE DRAINAGE AREA OF THE LOCATION SELECTED AS THE SAMPLING LOCATION;

(B). IN ADDITION TO (A) ABOVE, FOR EACH AREA OF THE SITE THAT DISCHARGES TO A RECEIVING WATER OR FROM AN OUTFALL, THE FIRST RAIN EVENT THAT REACHES OR EXCEEDS 0.5 INCH WITH A STORMWATER DISCHARGE THAT OCCURS DURING NORMAL BUSINESS HOURS AS DEFINED IN THIS PERMIT EITHER 30 DAYS AFTER THE FIRST SAMPLING EVENT OR AFTER ALL MASS GRADING OPERATIONS HAVE BEEN COMPLETED, BUT PRIOR TO SUBMITTAL OF A NOT, IN THE DRAINAGE AREA OF THE LOCATION SELECTED AS THE SAMPLING LOCATION, WHICHEVER COMES FIRST;

(C). AT THE TIME OF SAMPLING PERFORMED PURSUANT TO (A) AND (B) ABOVE, IF BMPS IN ANY AREA OF THE SITE THAT DISCHARGES TO A RECEIVING WATER OR FROM AN OUTFALL ARE NOT PROPERLY DESIGNED, INSTALLED AND MAINTAINED, CORRECTIVE ACTION SHALL BE DEFINED AND IMPLEMENTED WITHIN TWO (2) BUSINESS DAYS, AND TURBIDITY SAMPLES SHALL BE TAKEN FROM DISCHARGES FROM THAT AREA OF THE SITE FOR EACH SUBSEQUENT RAIN EVENT THAT REACHES OR EXCEEDS 0.5 INCH DURING NORMAL BUSINESS HOURS* UNTIL THE SELECTED TURBIDITY STANDARD IS ATTAINED, OR UNTIL POST-STORM EVENT INSPECTIONS DETERMINE THAT BMPS ARE PROPERLY DESIGNED, INSTALLED AND MAINTAINED;

(D). WHERE SAMPLING PURSUANT TO (A), (B) OR (C) ABOVE IS REQUIRED BUT NOT POSSIBLE (OR NOT REQUIRED BECAUSE THERE WAS NO DISCHARGE), THE PERMITTEE, IN ACCORDANCE WITH PART IV.D.4.A.(6), MUST INCLUDE A WRITTEN JUSTIFICATION IN THE INSPECTION REPORT OF WHY SAMPLING WAS NOT PERFORMED. PROVIDING THIS JUSTIFICATION DOES NOT RELIEVE THE PERMITTEE OF ANY SUBSEQUENT SAMPLING OBLIGATIONS UNDER (A), (B) OR (C) ABOVE; AND

(E). EXISTING CONSTRUCTION ACTIVITIES, I.E., THOSE THAT ARE OCCURRING ON OR BEFORE THE EFFECTIVE DATE OF THIS PERMIT, THAT HAVE MET THE SAMPLING REQUIRED BY (A) ABOVE SHALL SAMPLE IN ACCORDANCE WITH (B). THOSE EXISTING CONSTRUCTION ACTIVITIES THAT HAVE MET THE SAMPLING REQUIRED BY (B) ABOVE SHALL NOT BE REQUIRED TO CONDUCT ADDITIONAL SAMPLING OTHER THAN AS REQUIRED BY (C) ABOVE.

*NOTE THAT THE PERMITTEE MAY CHOOSE TO MEET THE REQUIREMENTS OF (A) AND ABOVE BY COLLECTING TURBIDITY SAMPLES FROM ANY RAIN EVENT THAT REACHES OR EXCEEDS 0.5 INCH AND ALLOWS FOR SAMPLING AT ANY TIME OF THE DAY OR WEEK.

7. NON-STORMWATER DISCHARGES. EXCEPT FOR FLOWS FROM FIRE FIGHTING ACTIVITIES, SOURCES OF NON-STORMWATER LISTED IN PART III.A.2. OF THIS PERMIT THAT ARE COMBINED WITH STORMWATER DISCHARGES ASSOCIATED WITH CONSTRUCTION ACTIVITY MUST BE IDENTIFIED IN THE PLAN. THE PLAN SHALL IDENTIFY AND ENSURE THE IMPLEMENTATION OF APPROPRIATE POLLUTION PREVENTION MEASURES FOR THE NON-STORMWATER COMPONENT(S) OF THE DISCHARGE.

E. REPORTING.

1. THE APPLICABLE PERMITTEES ARE REQUIRED TO SUBMIT THE SAMPLING RESULTS TO THE EPD AT THE ADDRESS SHOWN IN PART II.C. BY THE FIFTEENTH DAY OF THE MONTH FOLLOWING THE REPORTING PERIOD. REPORTING PERIODS ARE MONTHS DURING WHICH SAMPLES ARE TAKEN IN ACCORDANCE WITH THIS PERMIT. SAMPLING RESULTS SHALL BE IN A CLEARLY LEGIBLE FORMAT. UPON WRITTEN NOTIFICATION, EPD MAY REQUIRE THE APPLICABLE PERMITTEE TO SUBMIT THE SAMPLING RESULTS ON A MORE FREQUENT BASIS. SAMPLING AND ANALYSIS OF ANY STORMWATER DISCHARGE(S) OR THE RECEIVING WATER(S) BEYOND THE MINIMUM FREQUENCY STATED IN THIS PERMIT MUST BE REPORTED IN A SIMILAR MANNER TO THE EPD. THE SAMPLING REPORTS MUST BE SIGNED IN ACCORDANCE WITH PART V.G.2. SAMPLING REPORTS MUST BE SUBMITTED TO EPD USING THE ELECTRONIC SUBMITTAL SERVICE PROVIDED BY EPD. SAMPLING REPORTS MUST BE SUBMITTED TO EPD UNTIL SUCH TIME AS A NOT IS SUBMITTED IN ACCORDANCE WITH PART VI.

2. ALL SAMPLING REPORTS SHALL INCLUDE THE FOLLOWING INFORMATION:

a. THE RAINFALL AMOUNT, DATE, EXACT PLACE AND TIME OF SAMPLING OR MEASUREMENTS;
b. THE NAME(S) OF THE CERTIFIED PERSONNEL WHO PERFORMED THE SAMPLING AND MEASUREMENTS;
c. THE DATE(S) ANALYSES WERE PERFORMED;
d. THE TIME(S) ANALYSES WERE INITIATED;
e. THE NAME(S) OF THE CERTIFIED PERSONNEL WHO PERFORMED THE ANALYSES;
f. REFERENCES AND WRITTEN PROCEDURES, WHEN AVAILABLE, FOR THE ANALYTICAL TECHNIQUES OR METHODS USED;
g. THE RESULTS OF SUCH ANALYSES, INCLUDING THE BENCH SHEETS, INSTRUMENT READOUTS, COMPUTER DISKS OR TAPES, ETC., USED TO DETERMINE THESE RESULTS;
h. RESULTS WHICH EXCEED 1000 NTU SHALL BE REPORTED AS "EXCEEDS 1000 NTU;" AND
i. CERTIFICATION STATEMENT THAT SAMPLING WAS CONDUCTED AS PER THE PLAN.

3. ALL WRITTEN CORRESPONDENCE REQUIRED BY THIS PERMIT SHALL BE SUBMITTED BY RETURN RECEIPT CERTIFIED MAIL (OR SIMILAR SERVICE) TO THE APPROPRIATE DISTRICT OFFICE OF THE EPD ACCORDING TO THE SCHEDULE IN APPENDIX A OF THIS PERMIT. THE PERMITTEE SHALL RETAIN A COPY OF THE PROOF OF SUBMITTAL AT THE CONSTRUCTION SITE OR THE PROOF OF SUBMITTAL SHALL BE READILY AVAILABLE AT A DESIGNATED LOCATION FROM COMMENCEMENT OF CONSTRUCTION UNTIL SUCH TIME AS A NOT IS SUBMITTED IN ACCORDANCE WITH PART VI.

32 F. RETENTION OF RECORDS.

1. THE PRIMARY PERMITTEE SHALL RETAIN THE FOLLOWING RECORDS AT THE CONSTRUCTION SITE OR THE RECORDS SHALL BE READILY AVAILABLE AT A DESIGNATED ALTERNATE LOCATION FROM COMMENCEMENT OF CONSTRUCTION UNTIL SUCH TIME AS A NOT IS SUBMITTED IN ACCORDANCE WITH PART VI:

a. A COPY OF ALL NOTICES OF INTENT SUBMITTED TO EPD;
b. A COPY OF THE EROSION, SEDIMENTATION AND POLLUTION CONTROL PLAN REQUIRED BY THIS PERMIT;
c. THE DESIGN PROFESSIONAL'S REPORT OF THE RESULTS OF THE INSPECTION CONDUCTED IN ACCORDANCE WITH PART IV.A.5. OF THIS PERMIT;
d. A COPY OF ALL SAMPLING INFORMATION, RESULTS, AND REPORTS REQUIRED BY THIS PERMIT;
e. A COPY OF ALL INSPECTION REPORTS GENERATED IN ACCORDANCE WITH PART IV.D.4.A. OF THIS PERMIT;
f. A COPY OF ALL VIOLATION SUMMARIES AND VIOLATION SUMMARY REPORTS GENERATED IN ACCORDANCE WITH PART III.D.2. OF THIS PERMIT; AND
g. DAILY RAINFALL INFORMATION COLLECTED IN ACCORDANCE WITH PART IV.D.4.A.(2). OF THIS PERMIT.

2. COPIES OF ALL NOTICES OF INTENT, NOTICES OF TERMINATION, INSPECTION REPORTS, SAMPLING REPORTS (INCLUDING ALL CALIBRATION AND MAINTENANCE RECORDS AND ALL ORIGINAL STRIP CHART RECORDINGS FOR CONTINUOUS MONITORING INSTRUMENTATION) OR OTHER REPORTS REQUESTED BY THE EPD, EROSION, SEDIMENTATION AND POLLUTION CONTROL PLANS, RECORDS OF ALL DATA USED TO COMPLETE THE NOTICE OF INTENT TO BE COVERED BY THIS PERMIT AND ALL OTHER RECORDS REQUIRED BY THIS PERMIT SHALL BE RETAINED BY THE PERMITTEE WHO EITHER PRODUCED OR USED IT FOR A PERIOD OF AT LEAST THREE YEARS FROM THE DATE THAT THE NOT IS SUBMITTED IN ACCORDANCE WITH PART VI. OF THIS PERMIT. THESE RECORDS MUST BE MAINTAINED AT THE PERMITTEE'S PRIMARY PLACE OF BUSINESS OR AT A DESIGNATED ALTERNATIVE LOCATION ONCE THE CONSTRUCTION ACTIVITY HAS CEASED AT THE PERMITTED SITE. THIS PERIOD MAY BE EXTENDED BY REQUEST OF THE EPD AT ANY TIME UPON WRITTEN NOTIFICATION TO THE PERMITTEE.

GROUNDWATER WELL RESTORATION

APPENDIX 1

THE ES&PC PLAN MUST INCLUDE AT LEAST FOUR (4) OF THE FOLLOWING BMPS FOR THOSE AREAS OF THE SITE WHICH DISCHARGE TO AN IMPAIRED STREAM SEGMENT AND FOR SITES WHICH EPD HAS APPROVED IN WRITING A REQUEST TO DISTURB 50 ACRES OR MORE AT ANY ONE TIME.

The four items chosen must be appropriate for the site conditions.

Plan Page #	Included Y/N	
	N	a. During construction activities, double the width of the 25-foot undisturbed vegetated buffer along all State waters requiring a buffer and the 50-foot undisturbed vegetated buffer along all State waters classified as "trout streams" requiring a buffer. During construction activities, EPD will not grant variances to any such buffers that are increased in width.
	N	b. Increase all temporary sediment basins and retrofitted storm water management basins to provide sediment storage of at least 3600 cubic feet (134 cubic yards) per acre drained.
	N	c. Use baffles in all temporary sediment basins and retrofitted storm water management basins to at least double the conventional flow path length to the outlet structure.
	N	d. A large sign (minimum 4 feet x 8 feet) must be posted on site by the actual start date of construction. The sign must be visible from a public roadway. The sign must identify the following: (1) construction site, (2) the permittee(s), (3) the contact person(s) and telephone number(s), and (4) the permittee-hosted website where the Plan can be viewed must be provided on the submitted NOI. The sign must remain on site and the Plan must be available on the provided website until a NOT has been submitted.
C8.0	Y	e. Use tackifiers and/or mulch to stabilize areas left disturbed for more than seven (7) calendar days in accordance with **Part III. D.1.** of the current NPDES Permits.
	N	f. Conduct turbidity sampling after every rain event of 0.5 inch or greater within any 24-hour period, recognizing the exceptions specified in **Part IV.D.6.d.** of the current NPDES Permits.
	N	g. Comply with the applicable end-of-pipe turbidity effluent limit, without the "BMP defense" as provided for in O.C.G.A. 12-7-6 (a)(1).
C8.0	Y	h. Reduce the total planned site disturbance to less than 50% impervious surfaces (excluding any State-mandated buffer areas from such calculations). All calculations must be included on the Plan.
C8.0	Y	i. Limit the amount of disturbed area at any one time to no greater than 25 acres or 50% of the total planned site, whichever is less. All calculations must be included on the Plan.
	N	j. Use "Dirt II" techniques available on the EPD website to model and manage construction storm water runoff (including sheet flow). All calculations must be included on the Plan. (https://epd.georgia.gov/erosion-and-sedimentation)
	N	k. Conduct soil tests representative of conditions at the time of planting to identify and to implement site-specific fertilizer needs and/or add appropriate organic soil amendments (e.g., compost) and conduct pre- and post-construction soil sampling to a depth of six (6) inches to document improved levels of soil carbon after final stabilization of the construction site.
	N	l. Use mulch filter berms, in addition to a silt fence, on the site perimeter wherever construction storm water (including sheet flow) may be discharged. Mulch filter berms cannot be placed in waterways or areas of concentrated flow.
	N	m. Use appropriate erosion control slope stabilization instead of concrete in all construction storm water ditches and storm drainages designed for a 25-year, 24-hour rainfall event.
	N	n. Use flocculants or coagulants under a passive dosing method (e.g., flocculant blocks) within construction storm water ditches and storm drainages that feed into temporary sediment basins and retrofitted management basins.
	N	o. Install sod for a minimum 20-foot width (in lieu of seeding) after final grade has been achieved, along the site perimeter wherever storm water (including sheet flow) may be discharged.
	N	p. Conduct soil tests to identify and to implement site-specific fertilizer needs
	N	q. Certified personnel for primary permittees shall conduct inspections at least twice every seven (7) calendar days and within 24 hours of the end of the storm that is 0.5 inches rainfall or greater in accordance with **Part IV.D.4.a.(3)(a) – (c)**; secondary permittees, **Part IV.D.4.b.(3)(a) – (c)**; and tertiary permittees **Part IV.D.4.c.(3)(a) – (c)** *
	N	r. Apply the appropriate compost blankets (minimum depth 1.5 inches) to protect soil surfaces until vegetation is established during the final stabilization phase of the construction activity.
	N	s. Use alternative BMPs whose performance has been documented to be superior to conventional BMPs as certified by a Design Professional (unless disapproved by EPD or the Georgia Soil and Water Conservation Commission). (If using this item please refer to the Alternative BMP guidance document found at www.gaswcc.georgia.gov)
C8.0	Y	t. Limit the total planned site disturbance to less than 15% impervious surfaces (excluding any state mandated buffer areas from such calculations). All calculations must be included in the Plan.
	N	u. Conduct inspections during the intermediate grading and drainage BMP phase and during the final BMP phase of the project by the design professional who prepared the Plan in accordance with **Part IV.A.5** of the permit. The Plan must include a statement that the primary permittee must retain the design professional who prepared the Plan to conduct inspections during the intermediate grading and drainage BMP phase and during the final BMP phase.
	N	v. Install Post Construction BMPs (e.g., runoff reduction BMPs) which remove 80% TSS as outlined in the Georgia Stormwater Management Manual known as the Blue Book or an equivalent or more stringent design manual.

Effective January 1, 2025

* This requirement is different for infrastructure projects:
Certified personnel for primary permittees shall conduct inspections at least once every seven (7) calendar days and within 24 hours of the end of the storm that is 0.5 inches rainfall or greater in accordance with Part IV.D.4.a.(3)(a) – (c) of the permit.

GSWCC GEORGIA SOIL AND WATER CONSERVATION COMMISSION
Delmas S Crisp III
LEVEL II CERTIFIED DESIGN PROFESSIONAL
CERTIFICATION NUMBER: 0000100336
ISSUED: 11/08/2025 EXPIRES: 11/08/2028

1

EROSION, SEDIMENTATION & POLLUTION CONTROL PLAN CHECKLIST
STAND ALONE CONSTRUCTION PROJECTS
SWCD: CENTRAL GEORGIA

Project Name: GROUNDWATER WELLS #4 & #5 **Address:** 4745 ATLANTA HIGHWAY
City/County: HALL COUNTY, FLOWERY BRANCH, GA **Date on Plans:** OCT 2025
Name & email of person filling out checklist: DELMAS S. CRISP - trey.crisp@esgengineering.com

Plan Included Page #	Y/N	TO BE SHOWN ON ES&PC PLAN
C7.0	Y	1 The applicable Erosion, Sedimentation and Pollution Control Plan Checklist established by the Commission as of January 1 of the year in which the land-disturbing activity was permitted. (The completed Checklist must be submitted with the ES&PC Plan or the Plan will not be reviewed).
ALL	Y	2 Level II certification number issued by the Commission, signature and seal of the certified design professional. (Signature, seal and Level II number must be on each sheet pertaining to ES&PC plan or the Plan will not be reviewed).
C8.0	Y	3 Limits of distur

(4) 24-HOUR EMERGENCY CONTACT:
TREY CRISP
PHONE: 478-335-4612

(5) PRIMARY PERMITTEE:

CITY OF FLOWERY BRANCH
5410 PINE STREET
FLOWERY BRANCH, GA 30542
PHONE: 770-967-6371

GSWCC GEORGIA SOIL AND WATER CONSERVATION COMMISSION

Delmas S Crisp III
LEVEL II CERTIFIED DESIGN PROFESSIONAL

CERTIFICATION NUMBER: 0000100336
ISSUED: 11/06/2025 EXPIRES: 11/06/2028

ES&PC NOTES:

(26) (27)
1. FOR BUILDING MATERIALS, BUILDING PRODUCTS, CONSTRUCTION WASTES, TRASH, LANDSCAPE MATERIALS, FERTILIZERS, PESTICIDES, HERBICIDES, DETERGENTS, SANITARY WASTE AND OTHER MATERIALS PRESENT ON THE SITE, PROVIDE COVER (E.G. PLASTIC SHEETING, TEMPORARY ROOFS) TO MINIMIZE THE EXPOSURE OF THESE PRODUCTS TO PRECIPITATION AND TO STORMWATER, OR A SIMILARLY EFFECTIVE MEANS DESIGNED TO MINIMIZE THE DISCHARGE OF POLLUTANTS FROM THESE AREAS. MINIMIZATION OF EXPOSURE TO PRECIPITATION AND TO STORMWATER WILL NOT RESULT IN A DISCHARGE OF POLLUTANTS, OR WHERE EXPOSURE OF A SPECIFIC MATERIAL OR PRODUCT POSES LITTLE RISK TO STORMWATER CONTAMINATION (SUCH AS FINAL PRODUCTS AND MATERIALS INTENDED FOR OUTDOOR USE).

(26) (27)
2. WASTE DISPOSAL. LOCATE WASTE COLLECTION AREAS AWAY FROM STREETS, GUTTERS, WATERCOURSES AND STORM DRAINS. WASTE COLLECTION AREAS, SUCH AS DUMPSTERS, ARE OFTEN BEST LOCATED NEAR CONSTRUCTION SITE ENTRANCES TO MINIMIZE TRAFFIC ON DISTURBED SOILS. THE CONTRACTOR SHOULD INCLUDE SECONDARY CONTAINMENT AROUND LIQUID WASTE COLLECTION AREAS TO FURTHER MINIMIZE THE LIKELIHOOD OF CONTAMINATED DISCHARGES. SOLID MATERIALS, INCLUDING BUILDING MATERIALS, SHALL NOT BE DISCHARGED TO WATERS OF THE STATE, EXCEPT AS AUTHORIZED BY A SECTION 404 PERMIT.

3. ALL PERMITEES ARE REQUIRED TO MINIMIZE THE DISCHARGE OF POLLUTANTS FROM DEWATERING TRENCHES AND EXCAVATIONS. DISCHARGES ARE PROHIBITS UNLESS MANAGED BY APPROPRIATE CONTROLS.

(25)
4. IF ANY PETROLEUM PRODUCTS ARE KEPT ON SITE, THEN THEY SHALL BE KEPT IN A SECURE AREA AND MONITORED DAILY FOR ANY SPILLS OR LEAKS AND NOTED IN THE SAME DAY IN THE DAILY REPORT.

(25)
5. IF ANY PETROLEUM OR HARMFUL PRODUCTS ENTERS STATE WATERS OR ANY TRANSPORTATION TO STATE WATERS OF ANY DISCERNIBLE AMOUNT, THE SPILL SHALL BE REPORTED TO THE DEPARTMENT OF NATURAL RESOURCES EMERGENCY OPERATION CENTER AT 1-800-424-8802.

(25)
6. IF ANY PETROLEUM OR HARMFUL PRODUCTS ARE STORED ON SITE THEN THEY SHALL BE PLACED AS FAR FROM WETLANDS, DRAINAGE DITCHES, STORMWATER SYSTEMS, AND OTHER ENVIRONMENTALLY SENSITIVE AREAS AS POSSIBLE TO PROVIDE AS MUCH PROTECTION AS POSSIBLE. THESE AREAS SHOULD BE SURROUNDED BY BERMS OR OTHER PROTECTIVE MEASURES TO ENSURE THE CAPTURE OF ANY MATERIAL SHOULD LEAKS OR SPILLS OCCUR.

7. STABILIZATION OF THE SITE DURING CONSTRUCTION WITH PERMANENT VEGETATION SUCH AS (Ds3 AND Ds4) WILL BE INSTALLED IN ACCORDANCE WITH THE GRASSING SCHEDULE TO OPTIMIZE GROWTH TO STABILIZE THE SITE ONCE CONSTRUCTION IS COMPLETE AND WILL CONTROL ANY POSSIBLE POLLUTANTS FROM THE SITE.

(9)
8. THE EXISTING CONDITIONS OF THE SITE CONTAINS SITE AMENITY IMPROVEMENTS. THE PROPOSED USE OF THE SITES ARE PASSIVE PARKS, WITH ASSOCIATED PAVING, SANITARY, STORM, AND OTHER UTILITY INFRASTRUCTURE.

(14)
9. THE DESIGN PROFESSIONAL WHO PREPARED THE ES&PC PLAN IS TO INSPECT THE INSTALLATION OF THE INITIAL SEDIMENT STORAGE REQUIREMENTS AND PERIMETER CONTROL BMPS WITHIN 7 DAYS AFTER INSTALLATION.

(15)
10. NON-EXEMPT ACTIVITIES SHALL NOT BE CONDUCTED WITHIN THE 25 OR 50-FOOT UNDISTURBED STREAM BUFFERS AS MEASURED FROM THE POINT OF WRESTED VEGETATION OR WITHIN 25-FEET OF THE COASTAL MARSHLAND BUFFER AS MEASURED FROM THE JURISDICTIONAL DETERMINATION LINE WITHOUT FIRST ACQUIRING THE NECESSARY VARIANCES AND PERMITS.

(17)
11. AMENDMENTS/REVISIONS TO THE ES&PC PLAN WHICH HAVE A SIGNIFICANT EFFECT ON BMPS WITH A HYDRAULIC COMPONENT MUST BE CERTIFIED BY THE DESIGN PROFESSIONAL.

(18)
12. WASTE MATERIALS SHALL NOT BE DISCHARGED TO WATERS OF THE STATE, EXCEPT AS AUTHORIZED BY A SECTION 404 PERMIT.

(19)
13. THE ESCAPE OF SEDIMENT FROM THE SITE SHALL BE PREVENTED BY THE INSTALLATION OF EROSION AND SEDIMENT CONTROL MEASURES AND PRACTICES PRIOR TO LAND DISTURBING ACTIVITIES.

(20)
14. EROSION CONTROL MEASURES WILL BE MAINTAINED AT ALL TIMES. IF FULL IMPLEMENTATION OF THE APPROVED PLAN DOES NOT PROVIDE FOR EFFECTIVE EROSION CONTROL, ADDITIONAL EROSION AND SEDIMENT CONTROL MEASURES SHALL BE IMPLEMENTED TO CONTROL OR TREAT THE SEDIMENT SOURCE.

(21)
15. ANY DISTURBED AREA LEFT EXPOSED FOR A PERIOD GREATER THAN 14 DAYS SHALL BE STABILIZED WITH MULCH OR TEMPORARY SEEDING.

(28) MITIGATION OF SITE POLLUTANTS

NAME OF POLLUTANT	MITIGATION METHOD/BMP
SEDIMENT	CONSTRUCTION EXIT
	SILT FENCE
	INLET PROTECTION
	MULCH/GRASSING
PETROLEUM PRODUCTS	SEE ES&PC NOTES ON THIS SHEET
BUILDING MATERIALS	SEE ES&PC NOTES ON THIS SHEET
CONCRETE	SEE INTERMEDIATE EROSION AND SEDIMENTATION CONTROL NOTES

ANTICIPATED START DATE: 01/01/2025
ANTICIPATED END DATE: 07/01/2025

(29) ESPC PHASING SCHEDULE

DURATION	MONTH 1	MONTH 2	MONTH 3	MONTH 4	MONTH 5	MONTH 6
INSTALLATION & MAINTENANCE OF INITIAL BMPS	■	■	■	■	■	■
CLEARING & GRUBBING	■					
INSTALLATION & MAINTENANCE OF INTERMEDIATE BMPS		■	■	■	■	■
GRADING, STORMWATER, & UTILITY INSTALLATION		■	■	■	■	
BUILDING CONSTRUCTION		■	■	■	■	
FINAL GRADING, PAVING, & FINAL BMP INSTALLATION						■
REMOVAL OF ALL TEMPORARY BMPS						■

(34) WATERS SUPPORTING WARM WATER FISHERIES

SITE SIZE, ACRES	SURFACE WATER DRAINAGE AREA, SQUARE MILES								
	0 - 4.99	5 - 9.99	10 - 24.99	25 -49.99	50 - 99.99	100 - 249.99	250 - 499.99	500 +
1.00 - 10	75	150	200	400	750	750	750	750
10.01 - 25	50	100	100	200	300	500	750	750
25.01 - 50	50	50	100	100	200	300	750	750
50.01 - 100	50	50	50	100	100	150	300	600
100.01 +	50	50	50	50	50	100	200	100
SEE APPENDIX B								

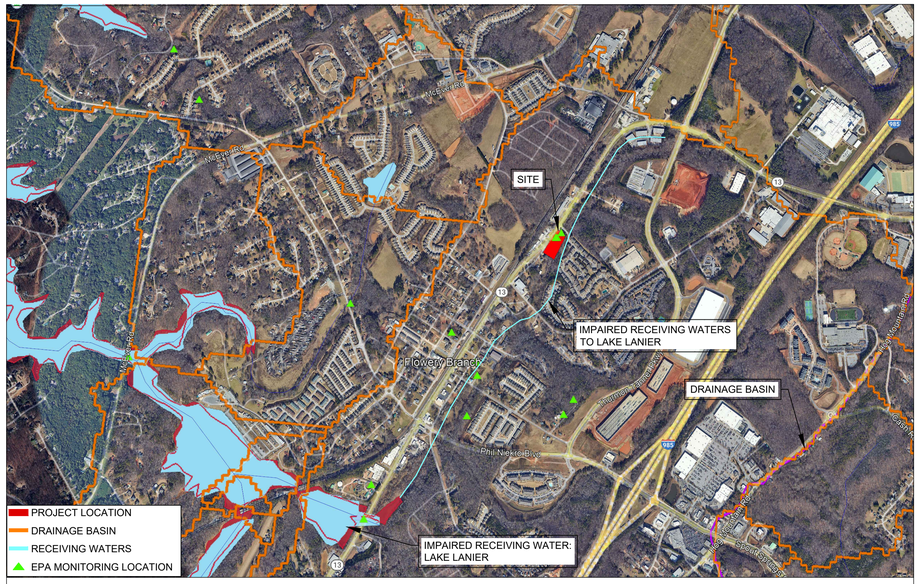

(11) RECEIVING WATERS AND IMPAIRED STREAM MAP

ESG ENGINEERING
6400 Peake Rd
Macon, GA 31210
Ph: (478) 474-4996
Fax: (478) 474-5045

GROUNDWATER WELLS #4 & #5

FOR THE

CITY OF FLOWERY BRANCH

REVISIONS

NO.	DESCRIPTION	DATE
1	ESPC SHEETS	11-7-25
2	BID SET OF PLANS	12-1-25
3	REVISED WITH CITY COMMENTS	12-5-25

BID SET

GEORGIA REGISTERED No. PE046341 PROFESSIONAL ENGINEER ANDREW D SWICEGOOD

DRAWN BY: DSC
CHECKED BY: ADS
DATE: OCT 2025
SCALE: N.T.S.

CONTENT:

EROSION, SEDIMENTATION, AND POLLUTION CONTROL PLAN DETAILS

SHEET NO: 3

C7.1

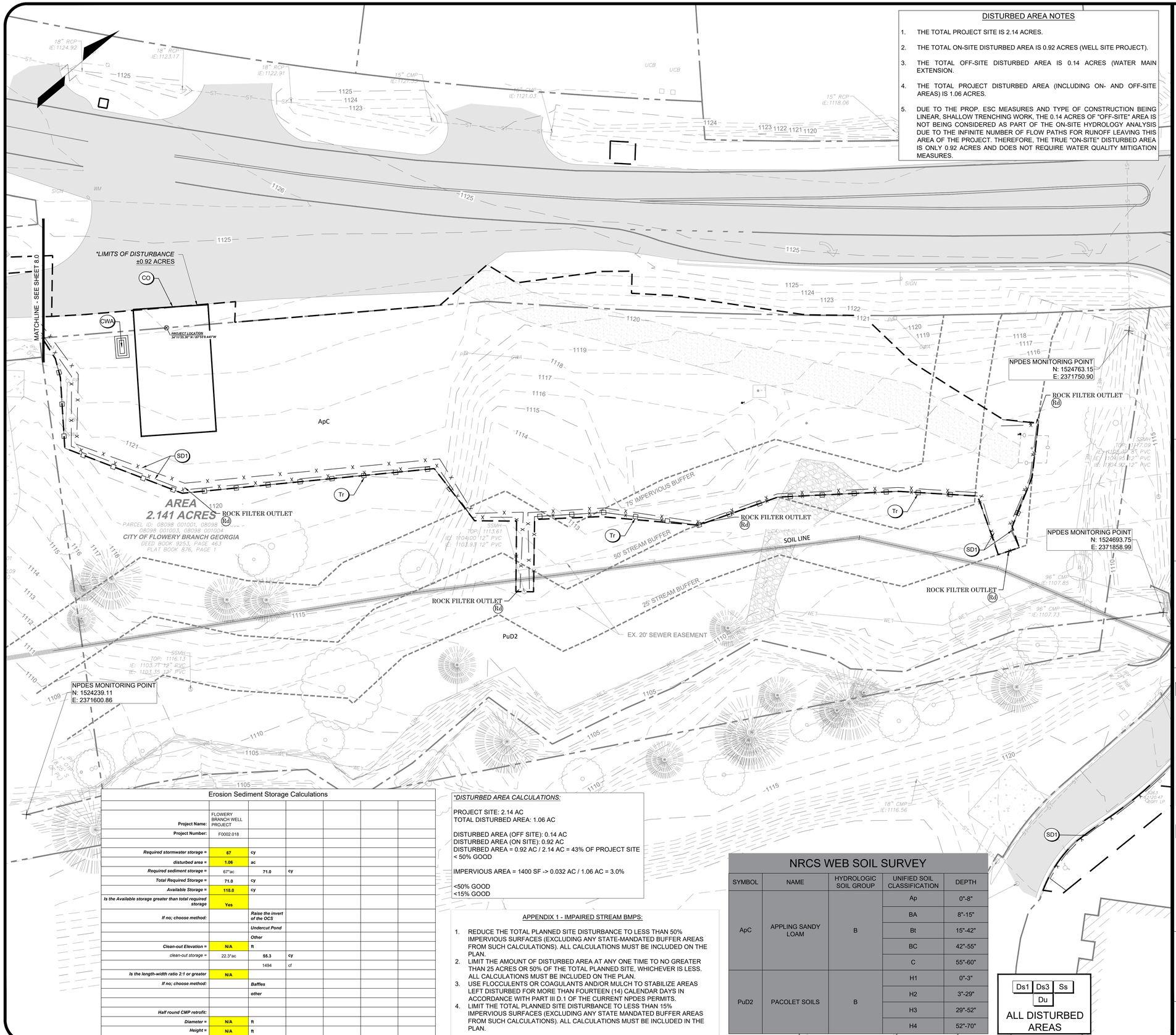

DISTURBED AREA NOTES

1. THE TOTAL PROJECT SITE IS 2.14 ACRES.
2. THE TOTAL ON-SITE DISTURBED AREA IS 0.92 ACRES (WELL SITE PROJECT).
3. THE TOTAL OFF-SITE DISTURBED AREA IS 0.14 ACRES (WATER MAIN EXTENSION.
4. THE TOTAL PROJECT DISTURBED AREA (INCLUDING ON- AND OFF-SITE AREAS) IS 1.06 ACRES.
5. DUE TO THE PROP. ESC MEASURES AND TYPE OF CONSTRUCTION BEING LINEAR, SHALLOW TRENCHING WORK, THE 0.14 ACRES OF "OFF-SITE" AREA IS NOT BEING CONSIDERED AS PART OF THE ON-SITE HYDROLOGY ANALYSIS DUE TO THE INFINITE NUMBER OF FLOW PATHS FOR RUNOFF LEAVING THIS AREA OF THE PROJECT. THEREFORE, THE TRUE "ON-SITE" DISTURBED AREA IS ONLY 0.92 ACRES AND DOES NOT REQUIRE WATER QUALITY MITIGATION MEASURES.

SITE INFORMATION

PROJECT ADDRESS	4745 ATLANTA HWY
PARCEL NUMBER	08098 001001 THRU 08098 001004
PARCEL ZONING	H-B
PROJECT AREA	2.14 ACRES
BUILDING SETBACK	
FRONT	NONE
REAR	30'
SIDE	10'
LANDSCAPE SETBACK	
FRONT	10'
REAR	30'
SIDE	NONE

EROSION, SEDIMENTATION, & POLLUTION CONTROL STATEMENTS:

1. THE DESIGN PROFESSIONAL WHO PREPARED THE ES&PC PLAN IS TO INSPECT AND CERTIFY THE INSTALLATION OF THE INITIAL SEDIMENT STORAGE REQUIREMENTS AND PERIMETER CONTROL BMPS WITHIN 7 DAYS AFTER INSTALLATION.
2. NON-EXEMPT ACTIVITIES SHALL NOT BE CONDUCTED WITHIN THE 25 OR 50-FOOT UNDISTURBED STREAM BUFFERS AS MEASURED FROM THE POINT OF WRESTED VEGETATION OR WITHIN 25-FEET OF THE COASTAL MARSHLAND BUFFER AS MEASURED FROM THE JURISDICTIONAL DETERMINATION LINE WITHOUT FIRST ACQUIRING THE NECESSARY VARIANCES AND PERMITS.
3. AMENDMENTS/REVISIONS TO THE ES&PC PLAN WHICH HAVE A SIGNIFICANT EFFECT ON BMPS WITH A HYDRAULIC COMPONENT MUST BE CERTIFIED BY THE DESIGN PROFESSIONAL.
4. WASTE MATERIALS SHALL NOT BE DISCHARGED TO WATERS OF THE STATE, EXCEPT AS AUTHORIZED BY A SECTION 404 PERMIT.
5. THE ESCAPE OF SEDIMENT FROM THE SITE SHALL BE PREVENTED BY THE INSTALLATION OF EROSION AND SEDIMENT CONTROL MEASURES AND PRACTICES PRIOR TO LAND DISTURBING ACTIVITIES.
6. EROSION CONTROL MEASURES WILL BE MAINTAINED AT ALL TIMES. IF FULL IMPLEMENTATION OF THE APPROVED PLAN DOES NOT PROVIDE FOR EFFECTIVE EROSION CONTROL, ADDITIONAL EROSION AND SEDIMENT CONTROL MEASURES SHALL BE IMPLEMENTED TO CONTROL OR TREAT THE SEDIMENT SOURCE.
7. ANY DISTURBED AREA LEFT EXPOSED FOR A PERIOD GREATER THAN 14 DAYS SHALL BE STABILIZED WITH MULCH OR TEMPORARY SEEDING.

INITIAL EROSION & SEDIMENTATION CONTROL NOTES:

1. THE CONTRACTOR SHALL INSTALL ALL PERIMETER CONTROL BMPS AND CONSTRUCTION EXIT PRIOR TO ANY LAND DISTURBING ACTIVITIES.
2. THE CONTRACTOR SHALL PROVIDE DUST CONTROL FOR THE PROJECT AREA AS NEEDED BASED ON PROJECT CONDITIONS.
3. THE CONTRACTOR SHALL PERFORM DAILY INSPECTIONS / MAINTENANCE OF ALL EROSION CONTROL BMPS. SEDIMENT LADEN RUNOFF SHALL BE CONTAINED AND TREATED ON SITE.
4. THE TOTAL ON-SITE DISTURBED AREA FOR THE INITIAL PHASE IS 0.92 ACRES.
5. THE TOTAL PROJECT DISTURBED AREA (INCLUDING OFF-SITE AREAS) IS 1.06 ACRES.

SEDIMENT STORAGE CALCULATIONS:

REQUIRED SEDIMENT STORAGE:
67 CUBIC YARD PER ACRE DRAINED = 67 CY/AC * 1.06 AC = 71.0 CY

PROVIDED SILT FENCE: 670 LF TYPE S SILT FENCE & 1,030 LF TYPE NS
PROVIDED SEDIMENT STORAGE (SD1): 3.75 SF*670 LF + 1.88 SF*1,030 LF = 118.0 CY
PROVIDED SEDIMENT STORAGE (SD4): 354 CY STORAGE AVAILABLE

THE TOTAL REQUIRED SEDIMENT STORAGE FOR THE INTERMEDIATE PHASE IS 71.0 CY. THE SEDIMENT STORAGE WILL BE PROVIDED BY THE SILT FENCE (SD1) AND ROCK FILTER OUTLETS.

STRUCTURAL PRACTICES

CODE	PRACTICE	DETAIL	MAP SYMBOL	DESCRIPTION
Co	CONSTRUCTION EXIT		Co (LARG.)	A crushed stone pad located at the construction site exit to provide a place for removing mud from tires thereby protecting public streets.
CWA	CONCRETE WASHOUT AREA		CWA	A washdown area for tools, concrete mixer chutes, hoppers and rear of vehicles.
Sd1	SEDIMENT BARRIER		Sd1 (INDICATE TYPE)	A barrier to prevent sediment from leaving the construction site. It may be sandbags, bales of straw or hay, brush, logs and poles, gravel, or a silt fence.
Rd	ROCK FILTER DAM		Rd	A temporary stone filter dam installed across drainageways or in conjunction with a temporary sediment trap.
Tr	TREE PROTECTION		Tr	The protection of desirable trees from injury during construction.

VEGETATIVE PRACTICES

CODE	PRACTICE	DETAIL	MAP SYMBOL	DESCRIPTION
Ds1	DISTURBED AREA STABILIZATION (WITH MULCHING ONLY)		Ds1	Establishing temporary protection for disturbed areas where seedlings may not have a suitable growing season to produce an erosion retarding cover.
Ds3	DISTURBED AREA STABILIZATION (WITH PERM SEEDING)		Ds3	Establishing a permanent vegetative cover such as trees, shrubs, vines, grasses, or legumes on disturbed areas.
Du	DUST CONTROL ON DISTURBED AREAS		Du	Controlling surface and air movement of dust on construction site, roadways and similar sites.
Ss	SLOPE STABILIZATION		Ss	A protective covering used to prevent erosion and establish temporary or permanent vegetation on steep slopes, shore lines, or channels.

Erosion Sediment Storage Calculations

Project Name:	FLOWERY BRANCH WELL PROJECT					
Project Number:	F0002.018					
Required stormwater storage =	**67**	**cy**				
disturbed area =	**1.06**	**ac**				
Required sediment storage =	67*ac	**71.0**	**cy**			
Total Required Storage =	**71.0**	**cy**				
Available Storage =	**118.0**	**cy**				
Is the Available storage greater than total required storage	**Yes**					
If no; choose method:		***Raise the invert of the OCS***				
		Undercut Pond				
		Other				
Clean-out Elevation =	**N/A**	**ft**				
clean-out storage =	22.3*ac	**55.3**	**cy**			
		1494	cf			
Is the length-width ratio 2:1 or greater	**N/A**					
If no; choose method:		***Baffles***				
		other				
Half round CMP retrofit:						
Diameter =	**N/A**	**ft**				
Height =	**N/A**	**ft**				

*DISTURBED AREA CALCULATIONS:

PROJECT SITE: 2.14 AC
TOTAL DISTURBED AREA: 1.06 AC

DISTURBED AREA (OFF SITE): 0.14 AC
DISTURBED AREA (ON SITE): 0.92 AC
DISTURBED AREA = 0.92 AC / 2.14 AC = 43% OF PROJECT SITE
< 50% GOOD

IMPERVIOUS AREA = 1400 SF -> 0.032 AC / 1.06 AC = 3.0%

<50% GOOD
<15% GOOD

APPENDIX 1 - IMPAIRED STREAM BMPS:

1. REDUCE THE TOTAL PLANNED SITE DISTURBANCE TO LESS THAN 50% IMPERVIOUS SURFACES (EXCLUDING ANY STATE-MANDATED BUFFER AREAS FROM SUCH CALCULATIONS). ALL CALCULATIONS MUST BE INCLUDED ON THE PLAN.
2. LIMIT THE AMOUNT OF DISTURBED AREA AT ANY ONE TIME TO NO GREATER THAN 25 ACRES OR 50% OF THE TOTAL PLANNED SITE, WHICHEVER IS LESS. ALL CALCULATIONS MUST BE INCLUDED ON THE PLAN.
3. USE FLOCCULENTS OR COAGULANTS AND/OR MULCH TO STABILIZE AREAS LEFT DISTURBED FOR MORE THAN FOURTEEN (14) CALENDAR DAYS IN ACCORDANCE WITH PART III D.1 OF THE CURRENT NPDES PERMITS.
4. LIMIT THE TOTAL PLANNED SITE DISTURBANCE TO LESS THAN 15% IMPERVIOUS SURFACES (EXCLUDING ANY STATE MANDATED BUFFER AREAS FROM SUCH CALCULATIONS). ALL CALCULATIONS MUST BE INCLUDED IN THE PLAN.

NRCS WEB SOIL SURVEY

SYMBOL	NAME	HYDROLOGIC SOIL GROUP	UNIFIED SOIL CLASSIFICATION	DEPTH
ApC	APPLING SANDY LOAM	B	Ap	0"-8"
			BA	8"-15"
			Bt	15"-42"
			BC	42"-55"
			C	55"-60"
PuD2	PACOLET SOILS	B	H1	0"-3"
			H2	3"-29"
			H3	29"-52"
			H4	52"-70"

Ds1 | Ds3 | Ss | Du
ALL DISTURBED AREAS

20' 10' 0' 20'
GRAPHIC SCALE 1" = 20'

GSWCC GEORGIA SOIL AND WATER CONSERVATION COMMISSION
Delmas S Crisp III
LEVEL II CERTIFIED DESIGN PROFESSIONAL
CERTIFICATION NUMBER: 0000100336
ISSUED: 11/08/2025 EXPIRES: 11/08/2028

GEORGIA811 www.Georgia811.com

ESG ENGINEERING
6400 Peake Rd
Macon, GA 31210
Ph: (478) 474-4996
Fax: (478) 474-5045

GROUNDWATER WELLS #4 & #5

FOR THE
CITY OF FLOWERY BRANCH

REVISIONS

NO.	DESCRIPTION	DATE
1	ESPC SHEETS	11-7-25
2	BID SET OF PLANS	12-1-25
3	REVISED WITH CITY COMMENTS	12-5-25

BID SET

GEORGIA REGISTERED No. PE046341 PROFESSIONAL ENGINEER ANDREW D SWICEGOOD

DRAWN BY: DSC
CHECKED BY: ADS
DATE: OCT 2025
SCALE: SEE SCALE

CONTENT:

CIVIL:
INITIAL EROSION, SEDIMENTATION, & POLLUTION CONTROL PLAN

SHEET NO: 2 3
C8.0

DISTURBED AREA NOTES

1. THE TOTAL PROJECT SITE IS 2.14 ACRES.
2. THE TOTAL ON-SITE DISTURBED AREA IS 0.92 ACRES (WELL SITE PROJECT).
3. THE TOTAL OFF-SITE DISTURBED AREA IS 0.14 ACRES (WATER MAIN EXTENSION.
4. THE TOTAL PROJECT DISTURBED AREA (INCLUDING ON- AND OFF-SITE AREAS) IS 1.06 ACRES.
5. DUE TO THE PROP. ESC MEASURES AND TYPE OF CONSTRUCTION BEING LINEAR, SHALLOW TRENCHING WORK, THE 0.14 ACRES OF "OFF-SITE" AREA IS NOT BEING CONSIDERED AS PART OF THE ON-SITE HYDROLOGY ANALYSIS DUE TO THE INFINITE NUMBER OF FLOW PATHS FOR RUNOFF LEAVING THIS AREA OF THE PROJECT. THEREFORE, THE TRUE "ON-SITE" DISTURBED AREA IS ONLY 0.92 ACRES AND DOES NOT REQUIRE WATER QUALITY MITIGATION MEASURES.

EROSION, SEDIMENTATION, & POLLUTION CONTROL STATEMENTS:

1. THE DESIGN PROFESSIONAL WHO PREPARED THE ES&PC PLAN IS TO INSPECT AND CERTIFY THE INSTALLATION OF THE INITIAL SEDIMENT STORAGE REQUIREMENTS AND PERIMETER CONTROL BMPS WITHIN 7 DAYS AFTER INSTALLATION.
2. NON-EXEMPT ACTIVITIES SHALL NOT BE CONDUCTED WITHIN THE 25 OR 50-FOOT UNDISTURBED STREAM BUFFERS AS MEASURED FROM THE POINT OF WRESTED VEGETATION OR WITHIN 25-FEET OF THE COASTAL MARSHLAND BUFFER AS MEASURED FROM THE JURISDICTIONAL DETERMINATION LINE WITHOUT FIRST ACQUIRING THE NECESSARY VARIANCES AND PERMITS.
3. AMENDMENTS/REVISIONS TO THE ES&PC PLAN WHICH HAVE A SIGNIFICANT EFFECT ON BMPS WITH A HYDRAULIC COMPONENT MUST BE CERTIFIED BY THE DESIGN PROFESSIONAL.
4. WASTE MATERIALS SHALL NOT BE DISCHARGED TO WATERS OF THE STATE, EXCEPT AS AUTHORIZED BY A SECTION 404 PERMIT.
5. THE ESCAPE OF SEDIMENT FROM THE SITE SHALL BE PREVENTED BY THE INSTALLATION OF EROSION AND SEDIMENT CONTROL MEASURES AND PRACTICES PRIOR TO LAND DISTURBING ACTIVITIES.
6. EROSION CONTROL MEASURES WILL BE MAINTAINED AT ALL TIMES. IF FULL IMPLEMENTATION OF THE APPROVED PLAN DOES NOT PROVIDE FOR EFFECTIVE EROSION CONTROL, ADDITIONAL EROSION AND SEDIMENT CONTROL MEASURES SHALL BE IMPLEMENTED TO CONTROL OR TREAT THE SEDIMENT SOURCE.
7. ANY DISTURBED AREA LEFT EXPOSED FOR A PERIOD GREATER THAN 14 DAYS SHALL BE STABILIZED WITH MULCH OR TEMPORARY SEEDING.

INTERMEDIATE EROSION & SEDIMENTATION CONTROL NOTES:

1. CONTRACTOR SHALL INSTALL CONCRETE WASH AREA. CONCRETE WASH AREA SHALL BE USED FOR WASHDOWN OF TOOLS, CONCRETE MIXER CHUTES, HOPPERS AND REAR OF THE VEHICLES ONLY. WASHOUT OF THE DRUM AT THE CONSTRUCTION SITE IS PROHIBITED.
2. THE CONTRACTOR SHALL PROVIDE DUST CONTROL FOR THE PROJECT AREA AS NEEDED BASED ON PROJECT CONDITIONS.
3. THE CONTRACTOR SHALL PERFORM DAILY INSPECTIONS / MAINTENANCE OF ALL EROSION CONTROL BMPS. SEDIMENT LADEN RUNOFF SHALL BE CONTAINED AND TREATED ON SITE.
4. THE TOTAL ON-SITE DISTURBED AREA FOR THE INITIAL PHASE IS 0.92 ACRES.
5. THE TOTAL PROJECT DISTURBED AREA (INCLUDING OFF-SITE AREAS) IS 1.06 ACRES.
6. THE PRIMARY PERMITTEE WILL RETAIN ESG (THE DESIGN PROFESSIONAL) DURNIG ALL PHASES OF ESPC.
7. PROVIDED SILT FENCE: ±1,030 LF SILT FENCE TYPE NS & ±670 LF SILT FENCE TYPE S.

SEDIMENT STORAGE CALCULATIONS:

REQUIRED SEDIMENT STORAGE:
67 CUBIC YARD PER ACRE DRAINED = 67 CY/AC * 1.06 AC = 71.0 CY

PROVIDED SILT FENCE: 670 LF TYPE S SILT FENCE & 1,030 LF TYPE NS
PROVIDED SEDIMENT STORAGE (SD1): 3.75 SF*670 LF + 1.88 SF*1,030 LF = 118.0 CY
PROVIDED SEDIMENT STORAGE (SD4): 354 CY STORAGE AVAILABLE

THE TOTAL REQUIRED SEDIMENT STORAGE FOR THE INTERMEDIATE PHASE IS 71.0 CY. THE SEDIMENT STORAGE WILL BE PROVIDED BY THE SILT FENCE (SD1) AND ROCK FILTER OUTLETS.

STRUCTURAL PRACTICES

CODE	PRACTICE	DETAIL	MAP SYMBOL	DESCRIPTION
Co	CONSTRUCTION EXIT			A crushed stone pad located at the construction site exit to provide a place for removing mud from tires thereby protecting public streets.
CWA	CONCRETE WASHOUT AREA			A washdown area for tools, concrete mixer chutes, hoppers and rear of vehicles.
Sd1	SEDIMENT BARRIER			A barrier to prevent sediment from leaving the construction site. It may be sandbags, bales of straw or hay, brush, logs and poles, gravel, or a silt fence.
Rd	ROCK FILTER DAM			A temporary stone filter dam installed across drainageways or in conjunction with a temporary sediment trap
Tr	TREE PROTECTION			The protection of desirable trees from injury during construction.

VEGETATIVE PRACTICES

CODE	PRACTICE	DETAIL	MAP SYMBOL	DESCRIPTION
Ds1	DISTURBED AREA STABILIZATION (WITH MULCHING ONLY)		Ds1	Establishing temporary protection for disturbed areas where seedlings may not have a suitable growing season to produce an erosion retarding cover.
Ds3	DISTURBED AREA STABILIZATION (WITH PERM SEEDING)		Ds3	Establishing a permanent vegetative cover such as trees, shrubs, vines, grasses, or legumes on disturbed areas.
Du	DUST CONTROL ON DISTURBED AREAS		Du	Controlling surface and air movement of dust on construction site, roadways and similar sites.
Fl-Co	FLOCCULANTS AND COAGULANTS		Fl-Co	Substance formulated to assist in the solids/liquid separation of suspended particles in solution.
Ss	SLOPE STABILIZATION		Ss	A protective covering used to prevent erosion and establish temporary or permanent vegetation on steep slopes, shore lines, or channels.

GSWCC GEORGIA SOIL AND WATER CONSERVATION COMMISSION
Delmas S Crisp III
LEVEL II CERTIFIED DESIGN PROFESSIONAL
CERTIFICATION NUMBER: 0000100336
ISSUED: 11/08/2025 EXPIRES: 11/08/2028

GRAPHIC SCALE 1" = 20'

GEORGIA811 www.Georgia811.com

Erosion Sediment Storage Calculations

Project Name:	FLOWERY BRANCH WELL PROJECT						
Project Number:	F0002.018						
Required stormwater storage =	**67**	**cy**					
disturbed area =	**1.06**	**ac**					
Required sediment storage =	67*ac		**71.0**	**cy**			
Total Required Storage =	**71.0**	**cy**					
Available Storage =	**118.0**	**cy**					
Is the Available storage greater than total required storage	**Yes**						
If no; choose method:		***Raise the invert of the OCS***					
		Undercut Pond					
		Other					
Clean-out Elevation =	**N/A**	**ft**					
clean-out storage =	22.3*ac		**55.3**	**cy**			
			1494	cf			
Is the length-width ratio 2:1 or greater	**N/A**						
If no; choose method:		***Baffles***					
		other					
Half round CMP retrofit:							
Diameter =	**N/A**	**ft**					
Height =	**N/A**	**ft**					

Ds1 | Ds3 | Ss
Du | Fl-Co
ALL DISTURBED AREAS

APPENDIX 1 - IMPAIRED STREAM BMPS:

1. REDUCE THE TOTAL PLANNED SITE DISTURBANCE TO LESS THAN 50% IMPERVIOUS SURFACES (EXCLUDING ANY STATE-MANDATED BUFFER AREAS FROM SUCH CALCULATIONS). ALL CALCULATIONS MUST BE INCLUDED ON THE PLAN.
2. LIMIT THE AMOUNT OF DISTURBED AREA AT ANY ONE TIME TO NO GREATER THAN 25 ACRES OR 50% OF THE TOTAL PLANNED SITE, WHICHEVER IS LESS. ALL CALCULATIONS MUST BE INCLUDED ON THE PLAN.
3. USE FLOCCULENTS OR COAGULANTS AND/OR MULCH TO STABILIZE AREAS LEFT DISTURBED FOR MORE THAN FOURTEEN (14) CALENDAR DAYS IN ACCORDANCE WITH PART III D.1 OF THE CURRENT NPDES PERMITS.
4. LIMIT THE TOTAL PLANNED SITE DISTURBANCE TO LESS THAN 15% IMPERVIOUS SURFACES (EXCLUDING ANY STATE MANDATED BUFFER AREAS FROM SUCH CALCULATIONS). ALL CALCULATIONS MUST BE INCLUDED IN THE PLAN.

NRCS WEB SOIL SURVEY

SYMBOL	NAME	HYDROLOGIC SOIL GROUP	UNIFIED SOIL CLASSIFICATION	DEPTH
ApC	APPLING SANDY LOAM	B	Ap	0"-8"
			BA	8"-15"
			Bt	15"-42"
			BC	42"-55"
			C	55"-60"
PuD2	PACOLET SOILS	B	H1	0"-3"
			H2	3"-29"
			H3	29"-52"
			H4	52"-70"

DISTURBED AREA CALCULATIONS:

PROJECT SITE: 2.14 AC
TOTAL DISTURBED AREA: 1.06 AC

DISTURBED AREA (OFF SITE): 0.14 AC
DISTURBED AREA (ON SITE): 0.92 AC
DISTURBED AREA = 0.92 AC / 2.14 AC = 43% OF PROJECT SITE
< 50% GOOD

IMPERVIOUS AREA = 1400 SF -> 0.032 AC / 1.06 AC = 3.0%

<50% GOOD
<15% GOOD

ESG ENGINEERING
6400 Peake Rd
Macon, GA 31210
Ph: (478) 474-4996
Fax: (478) 474-5045

GROUNDWATER WELLS #4 & #5

FOR THE
CITY OF FLOWERY BRANCH

REVISIONS NO.	DESCRIPTION	DATE
1	ESPC SHEETS	11-7-25
2	BID SET OF PLANS	12-1-25
3	REVISED WITH CITY COMMENTS	12-5-25

BID SET

GEORGIA REGISTERED No. PE046341 PROFESSIONAL ENGINEER ANDREW D SWICEGOOD

DRAWN BY: DSC
CHECKED BY: ADS
DATE: OCT 2025
SCALE: SEE SCALE

CONTENT:

CIVIL:
INTERMEDIATE EROSION, SEDIMENTATION, & POLLUTION CONTROL PLAN

SHEET NO: 2 / 3

C8.1

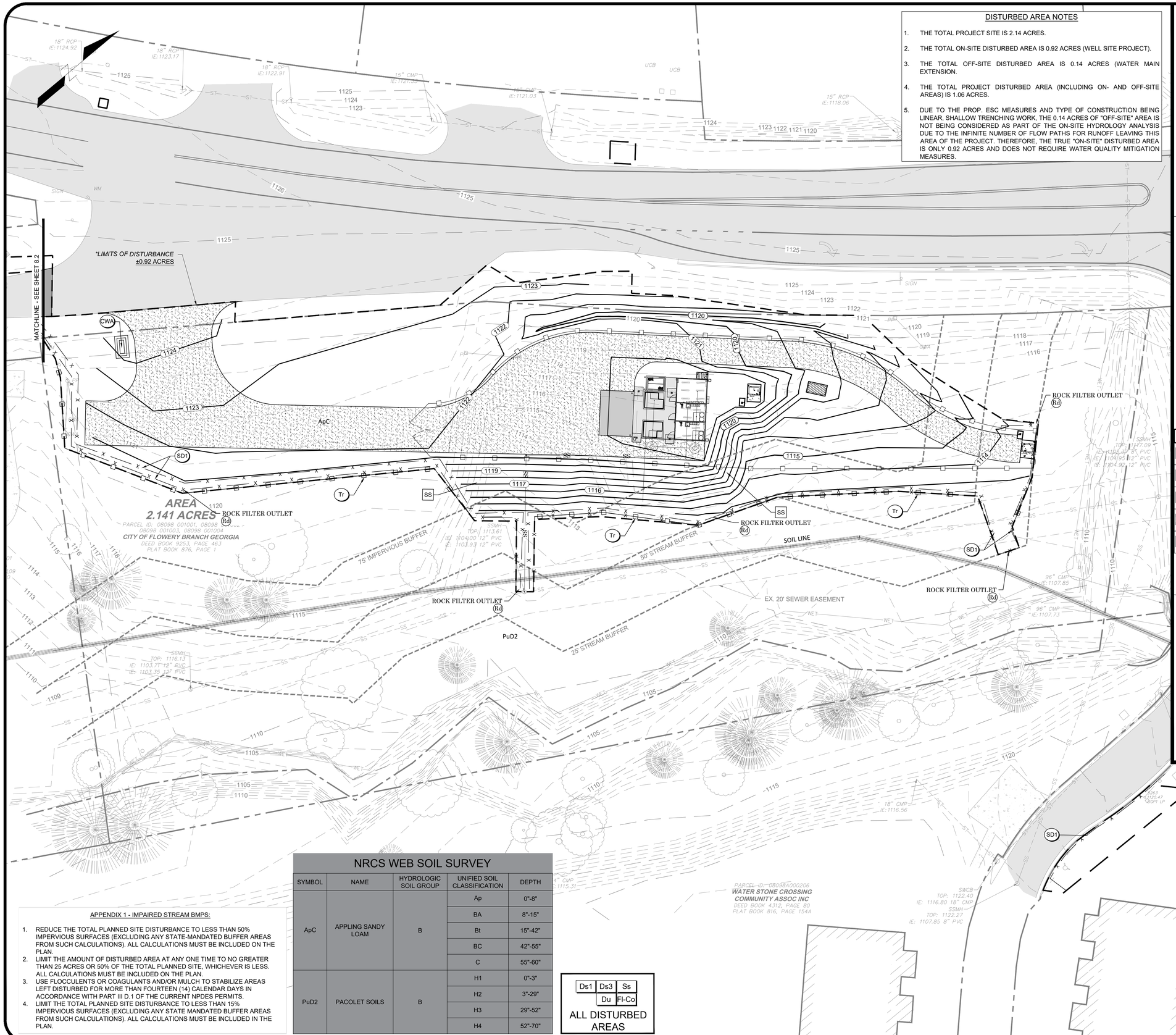

DISTURBED AREA NOTES

1. THE TOTAL PROJECT SITE IS 2.14 ACRES.
2. THE TOTAL ON-SITE DISTURBED AREA IS 0.92 ACRES (WELL SITE PROJECT).
3. THE TOTAL OFF-SITE DISTURBED AREA IS 0.14 ACRES (WATER MAIN EXTENSION.
4. THE TOTAL PROJECT DISTURBED AREA (INCLUDING ON- AND OFF-SITE AREAS) IS 1.06 ACRES.
5. DUE TO THE PROP. ESC MEASURES AND TYPE OF CONSTRUCTION BEING LINEAR, SHALLOW TRENCHING WORK, THE 0.14 ACRES OF "OFF-SITE" AREA IS NOT BEING CONSIDERED AS PART OF THE ON-SITE HYDROLOGY ANALYSIS DUE TO THE INFINITE NUMBER OF FLOW PATHS FOR RUNOFF LEAVING THIS AREA OF THE PROJECT. THEREFORE, THE TRUE "ON-SITE" DISTURBED AREA IS ONLY 0.92 ACRES AND DOES NOT REQUIRE WATER QUALITY MITIGATION MEASURES.

EROSION, SEDIMENTATION, & POLLUTION CONTROL STATEMENTS:

1. THE DESIGN PROFESSIONAL WHO PREPARED THE ES&PC PLAN IS TO INSPECT AND CERTIFY THE INSTALLATION OF THE INITIAL SEDIMENT STORAGE REQUIREMENTS AND PERIMETER CONTROL BMPS WITHIN 7 DAYS AFTER INSTALLATION.
2. NON-EXEMPT ACTIVITIES SHALL NOT BE CONDUCTED WITHIN THE 25 OR 50-FOOT UNDISTURBED STREAM BUFFERS AS MEASURED FROM THE POINT OF WRESTED VEGETATION OR WITHIN 25-FEET OF THE COASTAL MARSHLAND BUFFER AS MEASURED FROM THE JURISDICTIONAL DETERMINATION LINE WITHOUT FIRST ACQUIRING THE NECESSARY VARIANCES AND PERMITS.
3. AMENDMENTS/REVISIONS TO THE ES&PC PLAN WHICH HAVE A SIGNIFICANT EFFECT ON BMPS WITH A HYDRAULIC COMPONENT MUST BE CERTIFIED BY THE DESIGN PROFESSIONAL.
4. WASTE MATERIALS SHALL NOT BE DISCHARGED TO WATERS OF THE STATE, EXCEPT AS AUTHORIZED BY A SECTION 404 PERMIT.
5. THE ESCAPE OF SEDIMENT FROM THE SITE SHALL BE PREVENTED BY THE INSTALLATION OF EROSION AND SEDIMENT CONTROL MEASURES AND PRACTICES PRIOR TO LAND DISTURBING ACTIVITIES.
6. EROSION CONTROL MEASURES WILL BE MAINTAINED AT ALL TIMES. IF FULL IMPLEMENTATION OF THE APPROVED PLAN DOES NOT PROVIDE FOR EFFECTIVE EROSION CONTROL, ADDITIONAL EROSION AND SEDIMENT CONTROL MEASURES SHALL BE IMPLEMENTED TO CONTROL OR TREAT THE SEDIMENT SOURCE.
7. ANY DISTURBED AREA LEFT EXPOSED FOR A PERIOD GREATER THAN 14 DAYS SHALL BE STABILIZED WITH MULCH OR TEMPORARY SEEDING.

FINAL EROSION & SEDIMENTATION CONTROL NOTES:

1. CONTRACTOR SHALL INSTALL CONCRETE WASH AREA. CONCRETE WASH AREA SHALL BE USED FOR WASHDOWN OF TOOLS, CONCRETE MIXER CHUTES, HOPPERS AND REAR OF THE VEHICLES ONLY. WASHOUT OF THE DRUM AT THE CONSTRUCTION SITE IS PROHIBITED.
2. THE CONTRACTOR SHALL REMOVE ALL TEMPORARY BMPS ONCE FINAL STABILIZATION HAS BEEN MET.
3. THE CONTRACTOR SHALL PERFORM DAILY INSPECTIONS / MAINTENANCE OF ALL EROSION CONTROL BMPS. SEDIMENT LADEN RUNOFF SHALL BE CONTAINED AND TREATED ON SITE.
4. THE PRIMARY PERMITTEE WILL RETAIN THE DESIGN PROFESSIONAL DURING THE INTERMEDIATE GRADING AND DRAINAGE BMP PHASE, AS WELL AS, THE FINAL BMP PHASE.
5. DRUM WASHOUT IS PROHIBITED FROM CONSTRUCTION SITE.
4. THE TOTAL ON-SITE DISTURBED AREA FOR THE INITIAL PHASE IS 0.92 ACRES.
5. THE TOTAL PROJECT DISTURBED AREA (INCLUDING OFF-SITE AREAS) IS 1.06 ACRES.

VEGETATIVE PRACTICES

CODE	PRACTICE	DETAIL	MAP SYMBOL	DESCRIPTION
Ds1	DISTURBED AREA STABILIZATION (WITH MULCHING ONLY)		Ds1	Establishing temporary protection for disturbed areas where seedlings may not have a suitable growing season to produce an erosion retarding cover.
Ds3	DISTURBED AREA STABILIZATION (WITH PERM SEEDING)		Ds3	Establishing a permanent vegetative cover such as trees, shrubs, vines, grasses, or legumes on disturbed areas.
Du	DUST CONTROL ON DISTURBED AREAS		Du	Controlling surface and air movement of dust on construction site, roadways and similar sites.
Fl-Co	FLOCCULANTS AND COAGULANTS		Fl-Co	Substance formulated to assist in the solids/liquid separation of suspended particles in solution.
Ss	SLOPE STABILIZATION		Ss	A protective covering used to prevent erosion and establish temporary or permanent vegetation on steep slopes, shore lines, or channels.

NRCS WEB SOIL SURVEY

SYMBOL	NAME	HYDROLOGIC SOIL GROUP	UNIFIED SOIL CLASSIFICATION	DEPTH
ApC	APPLING SANDY LOAM	B	Ap	0"-8"
			BA	8"-15"
			Bt	15"-42"
			BC	42"-55"
			C	55"-60"
PuD2	PACOLET SOILS	B	H1	0"-3"
			H2	3"-29"
			H3	29"-52"
			H4	52"-70"

APPENDIX 1 - IMPAIRED STREAM BMPS:

1. REDUCE THE TOTAL PLANNED SITE DISTURBANCE TO LESS THAN 50% IMPERVIOUS SURFACES (EXCLUDING ANY STATE-MANDATED BUFFER AREAS FROM SUCH CALCULATIONS). ALL CALCULATIONS MUST BE INCLUDED ON THE PLAN.
2. LIMIT THE AMOUNT OF DISTURBED AREA AT ANY ONE TIME TO NO GREATER THAN 25 ACRES OR 50% OF THE TOTAL PLANNED SITE, WHICHEVER IS LESS. ALL CALCULATIONS MUST BE INCLUDED ON THE PLAN.
3. USE FLOCCULENTS OR COAGULANTS AND/OR MULCH TO STABILIZE AREAS LEFT DISTURBED FOR MORE THAN FOURTEEN (14) CALENDAR DAYS IN ACCORDANCE WITH PART III D.1 OF THE CURRENT NPDES PERMITS.
4. LIMIT THE TOTAL PLANNED SITE DISTURBANCE TO LESS THAN 15% IMPERVIOUS SURFACES (EXCLUDING ANY STATE MANDATED BUFFER AREAS FROM SUCH CALCULATIONS). ALL CALCULATIONS MUST BE INCLUDED IN THE PLAN.

Ds1 | Ds3 | Ss
Du | Fl-Co
ALL DISTURBED AREAS

*DISTURBED AREA CALCULATIONS:

PROJECT SITE: 2.14 AC
TOTAL DISTURBED AREA: 1.06 AC

DISTURBED AREA (OFF SITE): 0.14 AC
DISTURBED AREA (ON SITE): 0.92 AC
DISTURBED AREA = 0.92 AC / 2.14 AC = 43% OF PROJECT SITE
< 50% GOOD

IMPERVIOUS AREA = 1400 SF -> 0.032 AC / 1.06 AC = 3.0%

<50% GOOD
<15% GOOD

GSWCC GEORGIA SOIL AND WATER CONSERVATION COMMISSION
Delmas S Crisp III
LEVEL II CERTIFIED DESIGN PROFESSIONAL
CERTIFICATION NUMBER: 0000100336
ISSUED: 11/08/2025 EXPIRES: 11/08/2028

GEORGIA811 www.Georgia811.com

20' 10' 0' 20'
GRAPHIC SCALE 1" = 20'

ESG ENGINEERING
6400 Peake Rd
Macon, GA 31210
Ph: (478) 474-4996
Fax: (478) 474-5045

GROUNDWATER WELLS #4 & #5

FOR THE
CITY OF FLOWERY BRANCH

NO.	DESCRIPTION	DATE
1	ESPC SHEETS	11-7-25
2	BID SET OF PLANS	12-1-25
3	REVISED WITH CITY COMMENTS	12-5-25

BID SET

GEORGIA REGISTERED No. PE046341 PROFESSIONAL ENGINEER ANDREW D SWICEGOOD

DRAWN BY: DSC
CHECKED BY: ADS
DATE: OCT 2025
SCALE: SEE SCALE

CONTENT:

CIVIL:
FINAL EROSION, SEDIMENTATION, & POLLUTION CONTROL PLAN

SHEET NO: 2.3
C8.2

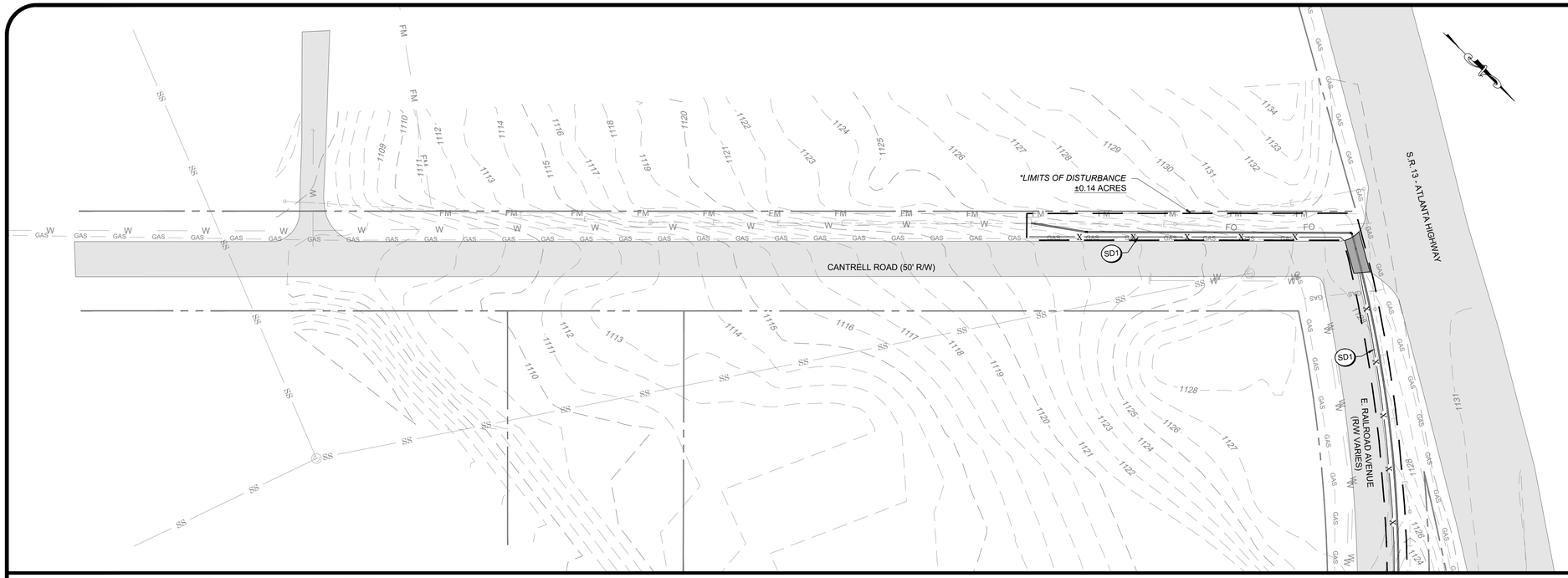

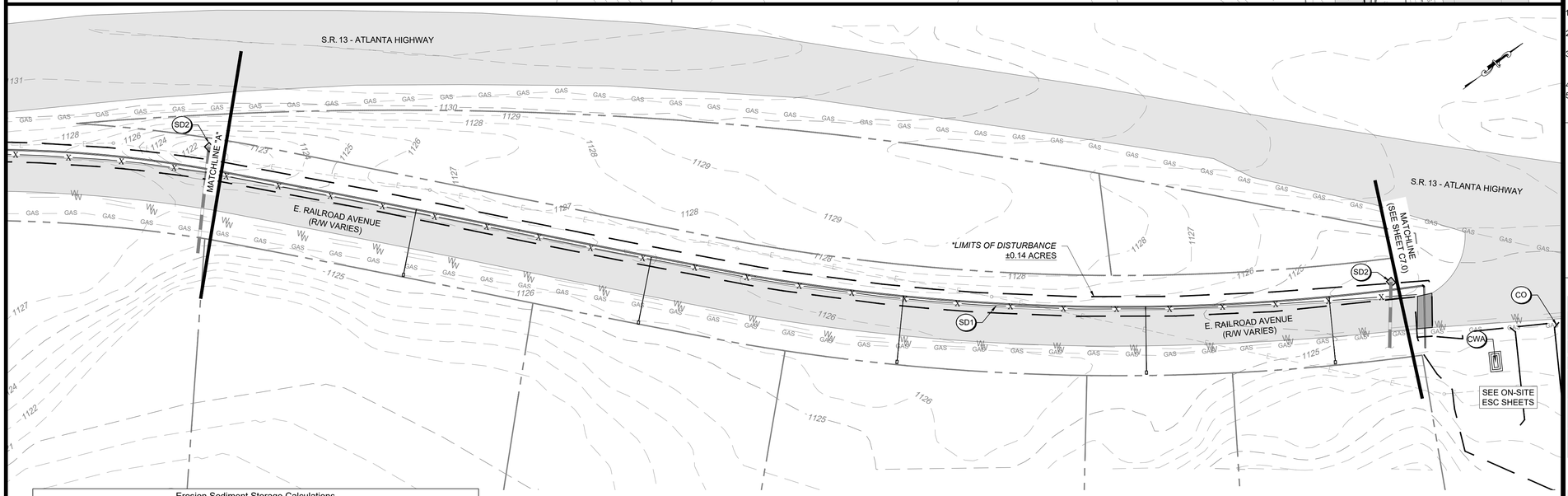

SITE INFORMATION	
PROJECT ADDRESS	4745 ATLANTA HWY
PARCEL NUMBER	08098 001001 THRU 08098 001004
PARCEL ZONING	H-B
PROJECT AREA	2.14 ACRES
BUILDING SETBACK	
FRONT	NONE
REAR	30'
SIDE	10'
LANDSCAPE SETBACK	
FRONT	10'
REAR	30'
SIDE	NONE

EROSION, SEDIMENTATION, & POLLUTION CONTROL STATEMENTS:

1. THE DESIGN PROFESSIONAL WHO PREPARED THE ES&PC PLAN IS TO INSPECT AND CERTIFY THE INSTALLATION OF THE INITIAL SEDIMENT STORAGE REQUIREMENTS AND PERIMETER CONTROL BMPS WITHIN 7 DAYS AFTER INSTALLATION.
2. NON-EXEMPT ACTIVITIES SHALL NOT BE CONDUCTED WITHIN THE 25 OR 50-FOOT UNDISTURBED STREAM BUFFERS AS MEASURED FROM THE POINT OF WRESTED VEGETATION OR WITHIN 25-FEET OF THE COASTAL MARSHLAND BUFFER AS MEASURED FROM THE JURISDICTIONAL DETERMINATION LINE WITHOUT FIRST ACQUIRING THE NECESSARY VARIANCES AND PERMITS.
3. AMENDMENTS/REVISIONS TO THE ES&PC PLAN WHICH HAVE A SIGNIFICANT EFFECT ON BMPS WITH A HYDRAULIC COMPONENT MUST BE CERTIFIED BY THE DESIGN PROFESSIONAL.
4. WASTE MATERIALS SHALL NOT BE DISCHARGED TO WATERS OF THE STATE, EXCEPT AS AUTHORIZED BY A SECTION 404 PERMIT.
5. THE ESCAPE OF SEDIMENT FROM THE SITE SHALL BE PREVENTED BY THE INSTALLATION OF EROSION AND SEDIMENT CONTROL MEASURES AND PRACTICES PRIOR TO LAND DISTURBING ACTIVITIES.
6. EROSION CONTROL MEASURES WILL BE MAINTAINED AT ALL TIMES. IF FULL IMPLEMENTATION OF THE APPROVED PLAN DOES NOT PROVIDE FOR EFFECTIVE EROSION CONTROL, ADDITIONAL EROSION AND SEDIMENT CONTROL MEASURES SHALL BE IMPLEMENTED TO CONTROL OR TREAT THE SEDIMENT SOURCE.
7. ANY DISTURBED AREA LEFT EXPOSED FOR A PERIOD GREATER THAN 14 DAYS SHALL BE STABILIZED WITH MULCH OR TEMPORARY SEEDING.

INITIAL EROSION & SEDIMENTATION CONTROL NOTES:

1. THE CONTRACTOR SHALL INSTALL ALL PERIMETER CONTROL BMPS AND CONSTRUCTION EXIT PRIOR TO ANY LAND DISTURBING ACTIVITIES.
2. THE CONTRACTOR SHALL PROVIDE DUST CONTROL FOR THE PROJECT AREA AS NEEDED BASED ON PROJECT CONDITIONS.
3. THE CONTRACTOR SHALL PERFORM DAILY INSPECTIONS / MAINTENANCE OF ALL EROSION CONTROL BMPS. SEDIMENT LADEN RUNOFF SHALL BE CONTAINED AND TREATED ON SITE.
4. THE TOTAL ON-SITE DISTURBED AREA FOR THE INITIAL PHASE IS 0.14 ACRES.
5. THE TOTAL PROJECT DISTURBED AREA (INCLUDING ON-SITE AREAS) IS 1.06 ACRES.

SEDIMENT STORAGE CALCULATIONS:

REQUIRED SEDIMENT STORAGE:
67 CUBIC YARD PER ACRE DRAINED = 67 CY/AC * 1.06 AC = 71.0 CY

PROVIDED SILT FENCE: 670 LF TYPE S SILT FENCE & 1,030 LF TYPE NS
PROVIDED SEDIMENT STORAGE (SD1): 3.75 SF*670 LF + 1.88 SF*1,030 LF = 118.0 CY
PROVIDED SEDIMENT STORAGE (SD4): 354 CY STORAGE AVAILABLE

THE TOTAL REQUIRED SEDIMENT STORAGE FOR THE INTERMEDIATE PHASE IS 71.0 CY. THE SEDIMENT STORAGE WILL BE PROVIDED BY THE SILT FENCE (SD1) AND ROCK FILTER OUTLETS.

STRUCTURAL PRACTICES

CODE	PRACTICE	DETAIL	MAP SYMBOL	DESCRIPTION
Co	CONSTRUCTION EXIT			A crushed stone pad located at the construction site exit to provide a place for removing mud from tires thereby protecting public streets.
CWA	CONCRETE WASHOUT AREA			A washdown area for tools, concrete mixer chutes, hoppers and rear of vehicles.
Sd1	SEDIMENT BARRIER			A barrier to prevent sediment from leaving the construction site. It may be sandbags, bales of straw or hay, brush, logs and poles, gravel, or a silt fence.
Rd	ROCK FILTER DAM			A temporary stone filter dam installed across drainageways or in conjunction with a temporary sediment trap
Sd2	INLET SEDIMENT TRAP			A temporary protective device formed at or around an inlet to a storm drain to trap sediment.

VEGETATIVE PRACTICES

CODE	PRACTICE	DETAIL	MAP SYMBOL	DESCRIPTION
Ds1	DISTURBED AREA STABILIZATION (WITH MULCHING ONLY)		Ds1	Establishing temporary protection for disturbed areas where seedlings may not have a suitable growing season to produce an erosion retarding cover.
Ds3	DISTURBED AREA STABILIZATION (WITH PERM.SEEDING)		Ds3	Establishing a permanent vegetative cover such as trees, shrubs, vines, grasses, or legumes on disturbed areas.
Du	DUST CONTROL ON DISTURBED AREAS		Du	Controlling surface and air movement of dust on construction site, roadways and similar sites.
Fl-Co	FLOCCULANTS & COAGGULANTS		Fl-Co	Substance formulated to assist in the solids/liquid separation of suspended particles in solution.

Erosion Sediment Storage Calculations						
Project Name:	FLOWERY BRANCH WELL PROJECT					
Project Number:	F0002.018					
Required stormwater storage =	**67**	**cy**				
disturbed area =	**1.06**	**ac**				
Required sediment storage =	67*ac	**71.0**	**cy**			
Total Required Storage =	**71.0**	**cy**				
Available Storage =	**118.0**	**cy**				
Is the Available storage greater than total required storage	**Yes**					
If no; choose method:		***Raise the invert of the OCS***				
		Undercut Pond				
		Other				
Clean-out Elevation =	**N/A**	**ft**				
clean-out storage =	22.3*ac	**55.3**	**cy**			
		1494	cf			
Is the length-width ratio 2:1 or greater	**N/A**					
If no; choose method:		***Baffles***				
		other				
Half round CMP retrofit:						
Diameter =	**N/A**	**ft**				
Height =	**N/A**	**ft**				

Ds1	Ds3
Du	Fl-Co

ALL DISTURBED AREAS

DISTURBED AREA CALCULATIONS:

PROJECT SITE: 2.14 AC
TOTAL DISTURBED AREA: 1.06 AC

DISTURBED AREA (OFF SITE): 0.14 AC
DISTURBED AREA (ON SITE): 0.92 AC
DISTURBED AREA = 0.92 AC / 2.14 AC = 43% OF PROJECT SITE
< 50% GOOD

IMPERVIOUS AREA = 1400 SF -> 0.032 AC / 1.06 AC = 3.0%

<50% GOOD
<15% GOOD

NRCS WEB SOIL SURVEY

SYMBOL	NAME	HYDROLOGIC SOIL GROUP	UNIFIED SOIL CLASSIFICATION	DEPTH
ApC	APPLING SANDY LOAM	B	Ap	0"-8"
			BA	8"-15"
			Bt	15"-42"
			BC	42"-55"
			C	55"-60"
PuD2	PACOLET SOILS	B	H1	0"-3"
			H2	3"-29"
			H3	29"-52"
			H4	52"-70"

APPENDIX 1 - IMPAIRED STREAM BMPS:

1. REDUCE THE TOTAL PLANNED SITE DISTURBANCE TO LESS THAN 50% IMPERVIOUS SURFACES (EXCLUDING ANY STATE-MANDATED BUFFER AREAS FROM SUCH CALCULATIONS). ALL CALCULATIONS MUST BE INCLUDED ON THE PLAN.
2. LIMIT THE AMOUNT OF DISTURBED AREA AT ANY ONE TIME TO NO GREATER THAN 25 ACRES OR 50% OF THE TOTAL PLANNED SITE, WHICHEVER IS LESS. ALL CALCULATIONS MUST BE INCLUDED ON THE PLAN.
3. USE FLOCCULENTS OR COAGULANTS AND/OR MULCH TO STABILIZE AREAS LEFT DISTURBED FOR MORE THAN FOURTEEN (14) CALENDAR DAYS IN ACCORDANCE WITH PART III D.1 OF THE CURRENT NPDES PERMITS.
4. LIMIT THE TOTAL PLANNED SITE DISTURBANCE TO LESS THAN 15% IMPERVIOUS SURFACES (EXCLUDING ANY STATE MANDATED BUFFER AREAS FROM SUCH CALCULATIONS). ALL CALCULATIONS MUST BE INCLUDED IN THE PLAN.

30' 15' 0' 30'
GRAPHIC SCALE 1" = 30'

GSWCC GEORGIA SOIL AND WATER CONSERVATION COMMISSION
Delmas S Crisp III
LEVEL II CERTIFIED DESIGN PROFESSIONAL
CERTIFICATION NUMBER: 0000100336
ISSUED: 11/08/2025 EXPIRES: 11/08/2028

GEORGIA811 www.Georgia811.com

ESG ENGINEERING
6400 Peake Rd
Macon, GA 31210
Ph: (478) 474-4996
Fax: (478) 474-5045

GROUNDWATER WELLS #4 & #5

FOR THE
CITY OF FLOWERY BRANCH

REVISIONS

NO.	DESCRIPTION	DATE
1	ESPC SHEETS	11-7-25
2	BID SET OF PLANS	12-1-25
3	REVISED WITH CITY COMMENTS	12-5-25

BID SET

GEORGIA REGISTERED No. PE046341 PROFESSIONAL ENGINEER ANDREW D SWICEGOOD

DRAWN BY: DSC
CHECKED BY: ADS
DATE: OCT 2025
SCALE: SEE SCALE

CONTENT:

CIVIL:
INITIAL ESPC - WATER MAIN EXTENSION

SHEET NO: 2 3
C8.3

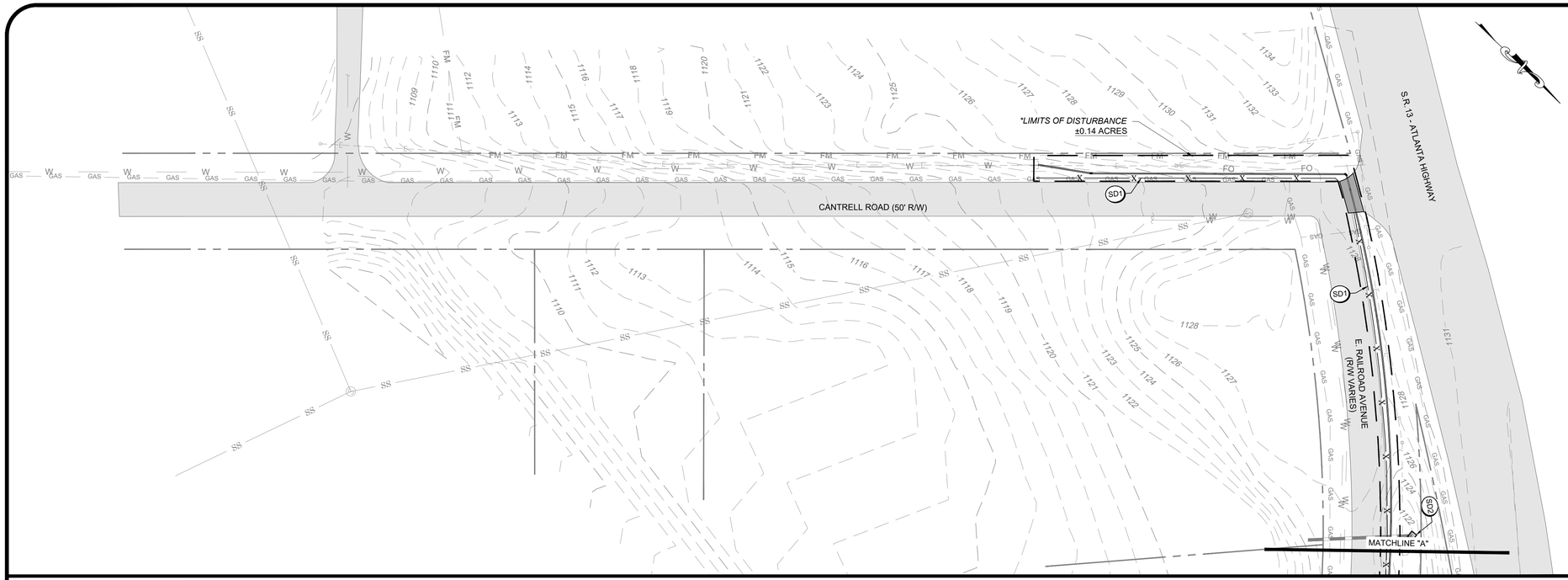

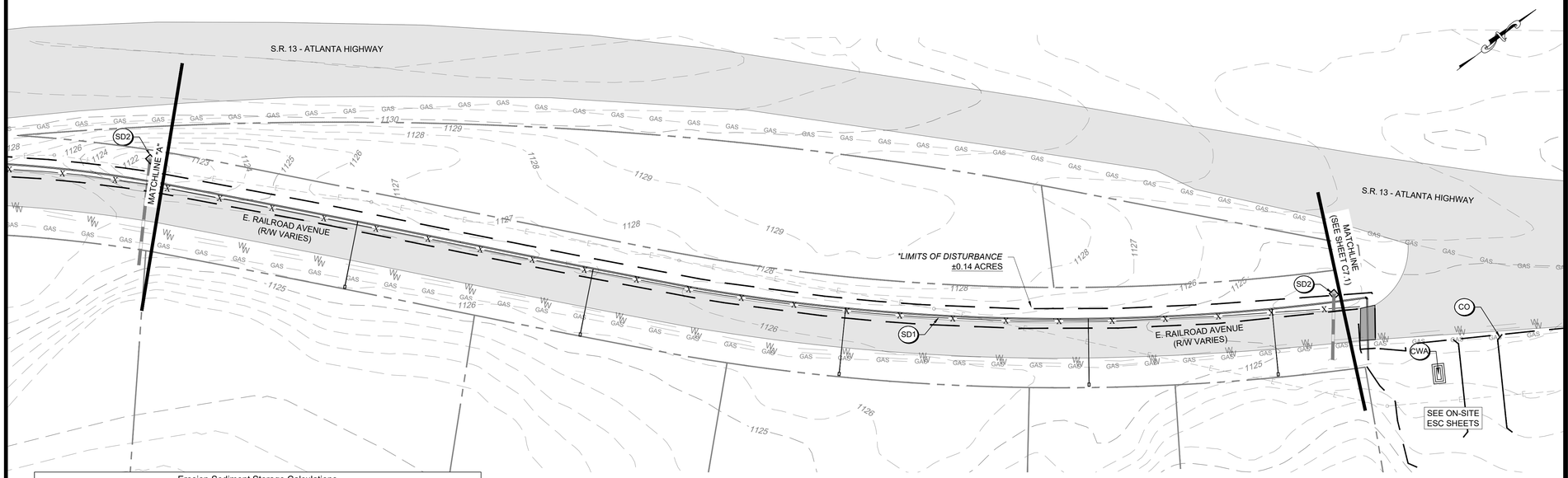

SITE INFORMATION	
PROJECT ADDRESS	4745 ATLANTA HWY
PARCEL NUMBER	08098 001001 THRU 08098 001004
PARCEL ZONING	H-B
PROJECT AREA	2.14 ACRES
BUILDING SETBACK	
FRONT	NONE
REAR	30'
SIDE	10'
LANDSCAPE SETBACK	
FRONT	10'
REAR	30'
SIDE	NONE

EROSION, SEDIMENTATION, & POLLUTION CONTROL STATEMENTS:

1. THE DESIGN PROFESSIONAL WHO PREPARED THE ES&PC PLAN IS TO INSPECT AND CERTIFY THE INSTALLATION OF THE INITIAL SEDIMENT STORAGE REQUIREMENTS AND PERIMETER CONTROL BMPS WITHIN 7 DAYS AFTER INSTALLATION.
2. NON-EXEMPT ACTIVITIES SHALL NOT BE CONDUCTED WITHIN THE 25 OR 50-FOOT UNDISTURBED STREAM BUFFERS AS MEASURED FROM THE POINT OF WRESTED VEGETATION OR WITHIN 25-FEET OF THE COASTAL MARSHLAND BUFFER AS MEASURED FROM THE JURISDICTIONAL DETERMINATION LINE WITHOUT FIRST ACQUIRING THE NECESSARY VARIANCES AND PERMITS.
3. AMENDMENTS/REVISIONS TO THE ES&PC PLAN WHICH HAVE A SIGNIFICANT EFFECT ON BMPS WITH A HYDRAULIC COMPONENT MUST BE CERTIFIED BY THE DESIGN PROFESSIONAL.
4. WASTE MATERIALS SHALL NOT BE DISCHARGED TO WATERS OF THE STATE, EXCEPT AS AUTHORIZED BY A SECTION 404 PERMIT.
5. THE ESCAPE OF SEDIMENT FROM THE SITE SHALL BE PREVENTED BY THE INSTALLATION OF EROSION AND SEDIMENT CONTROL MEASURES AND PRACTICES PRIOR TO LAND DISTURBING ACTIVITIES.
6. EROSION CONTROL MEASURES WILL BE MAINTAINED AT ALL TIMES. IF FULL IMPLEMENTATION OF THE APPROVED PLAN DOES NOT PROVIDE FOR EFFECTIVE EROSION CONTROL, ADDITIONAL EROSION AND SEDIMENT CONTROL MEASURES SHALL BE IMPLEMENTED TO CONTROL OR TREAT THE SEDIMENT SOURCE.
7. ANY DISTURBED AREA LEFT EXPOSED FOR A PERIOD GREATER THAN 14 DAYS SHALL BE STABILIZED WITH MULCH OR TEMPORARY SEEDING.

INTERMEDIATE EROSION & SEDIMENTATION CONTROL NOTES:

1. CONTRACTOR SHALL INSTALL CONCRETE WASH AREA. CONCRETE WASH AREA SHALL BE USED FOR WASHDOWN OF TOOLS, CONCRETE MIXER CHUTES, HOPPERS AND REAR OF THE VEHICLES ONLY. WASHOUT OF THE DRUM AT THE CONSTRUCTION SITE IS PROHIBITED.
2. THE CONTRACTOR SHALL PROVIDE DUST CONTROL FOR THE PROJECT AREA AS NEEDED BASED ON PROJECT CONDITIONS.
3. THE CONTRACTOR SHALL PERFORM DAILY INSPECTIONS / MAINTENANCE OF ALL EROSION CONTROL BMPS. SEDIMENT LADEN RUNOFF SHALL BE CONTAINED AND TREATED ON SITE.
4. THE PRIMARY PERMITTEE WILL RETAIN ESG (THE DESIGN PROFESSIONAL) DURING ALL PHASES OF ESPC.
4. THE TOTAL ON-SITE DISTURBED AREA FOR THE INITIAL PHASE IS 0.14 ACRES.
5. THE TOTAL PROJECT DISTURBED AREA (INCLUDING ON-SITE AREAS) IS 1.06 ACRES.

SEDIMENT STORAGE CALCULATIONS:

REQUIRED SEDIMENT STORAGE:
67 CUBIC YARD PER ACRE DRAINED = 67 CY/AC * 1.06 AC = 71.0 CY

PROVIDED SILT FENCE: 670 LF TYPE S SILT FENCE & 1,030 LF TYPE NS
PROVIDED SEDIMENT STORAGE (SD1): 3.75 SF*670 LF + 1.88 SF*1,030 LF = 118.0 CY
PROVIDED SEDIMENT STORAGE (SD4): 354 CY STORAGE AVAILABLE

THE TOTAL REQUIRED SEDIMENT STORAGE FOR THE INTERMEDIATE PHASE IS 71.0 CY. THE SEDIMENT STORAGE WILL BE PROVIDED BY THE SILT FENCE (SD1) AND ROCK FILTER OUTLETS.

STRUCTURAL PRACTICES

CODE	PRACTICE	DETAIL	MAP SYMBOL	DESCRIPTION
Co	CONSTRUCTION EXIT			A crushed stone pad located at the construction site exit to provide a place for removing mud from tires thereby protecting public streets.
CWA	CONCRETE WASHOUT AREA			A washdown area for tools, concrete mixer chutes, hoppers and rear of vehicles.
Sd1	SEDIMENT BARRIER			A barrier to prevent sediment from leaving the construction site. It may be sandbags, bales of straw or hay, brush, logs and poles, gravel, or a silt fence.
Sd2	INLET SEDIMENT TRAP			A temporary protective device formed at or around an inlet to a storm drain to trap sediment.
Rd	ROCK FILTER DAM			A temporary stone filter dam installed across drainageways or in conjunction with a temporary sediment trap

VEGETATIVE PRACTICES

CODE	PRACTICE	DETAIL	MAP SYMBOL	DESCRIPTION
Ds1	DISTURBED AREA STABILIZATION (WITH MULCHING ONLY)		Ds1	Establishing temporary protection for disturbed areas where seedlings may not have a suitable growing season to produce an erosion retarding cover.
Ds3	DISTURBED AREA STABILIZATION (WITH PERMSEEDING)		Ds3	Establishing a permanent vegetative cover such as trees, shrubs, vines, grasses, or legumes on disturbed areas.
Du	DUST CONTROL ON DISTURBED AREAS		Du	Controlling surface and air movement of dust on construction site, roadways and similar sites.
Fl-Co	FLOCCULANTS & COAGGULANTS		Fl-Co	Substance formulated to assist in the solids/liquid separation of suspended particles in solution.

Erosion Sediment Storage Calculations

Project Name:	FLOWERY BRANCH WELL PROJECT					
Project Number:	F0002.018					
Required stormwater storage =	**67**	**cy**				
disturbed area =	**1.06**	**ac**				
Required sediment storage =	67*ac	**71.0**	**cy**			
Total Required Storage =	**71.0**	**cy**				
Available Storage =	**118.0**	**cy**				
Is the Available storage greater than total required storage	**Yes**					
If no; choose method:		***Raise the invert of the OCS***				
		Undercut Pond				
		Other				
Clean-out Elevation =	**N/A**	**ft**				
clean-out storage =	22.3*ac	**55.3**	**cy**			
		1494	cf			
Is the length-width ratio 2:1 or greater	**N/A**					
If no; choose method:		***Baffles***				
		other				
Half round CMP retrofit:						
Diameter =	**N/A**	**ft**				
Height =	**N/A**	**ft**				

Ds1	Ds3
Du	Fl-Co

ALL DISTURBED AREAS

**DISTURBED AREA CALCULATIONS:*

PROJECT SITE: 2.14 AC
TOTAL DISTURBED AREA: 1.06 AC

DISTURBED AREA (OFF SITE): 0.14 AC
DISTURBED AREA (ON SITE): 0.92 AC
DISTURBED AREA = 0.92 AC / 2.14 AC = 43% OF PROJECT SITE
< 50% GOOD

IMPERVIOUS AREA = 1400 SF -> 0.032 AC / 1.06 AC = 3.0%

<50% GOOD
<15% GOOD

NRCS WEB SOIL SURVEY

SYMBOL	NAME	HYDROLOGIC SOIL GROUP	UNIFIED SOIL CLASSIFICATION	DEPTH
ApC	APPLING SANDY LOAM	B	Ap	0"-8"
			BA	8"-15"
			Bt	15"-42"
			BC	42"-55"
			C	55"-60"
PuD2	PACOLET SOILS	B	H1	0"-3"
			H2	3"-29"
			H3	29"-52"
			H4	52"-70"

APPENDIX 1 - IMPAIRED STREAM BMPS:

1. REDUCE THE TOTAL PLANNED SITE DISTURBANCE TO LESS THAN 50% IMPERVIOUS SURFACES (EXCLUDING ANY STATE-MANDATED BUFFER AREAS FROM SUCH CALCULATIONS). ALL CALCULATIONS MUST BE INCLUDED ON THE PLAN.
2. LIMIT THE AMOUNT OF DISTURBED AREA AT ANY ONE TIME TO NO GREATER THAN 25 ACRES OR 50% OF THE TOTAL PLANNED SITE, WHICHEVER IS LESS. ALL CALCULATIONS MUST BE INCLUDED ON THE PLAN.
3. USE FLOCCULENTS OR COAGULANTS AND/OR MULCH TO STABILIZE AREAS LEFT DISTURBED FOR MORE THAN FOURTEEN (14) CALENDAR DAYS IN ACCORDANCE WITH PART III D.1 OF THE CURRENT NPDES PERMITS.
4. LIMIT THE TOTAL PLANNED SITE DISTURBANCE TO LESS THAN 15% IMPERVIOUS SURFACES (EXCLUDING ANY STATE MANDATED BUFFER AREAS FROM SUCH CALCULATIONS). ALL CALCULATIONS MUST BE INCLUDED IN THE PLAN.

30' 15' 0' 30'
GRAPHIC SCALE 1" = 30'

GSWCC GEORGIA SOIL AND WATER CONSERVATION COMMISSION
Delmas S Crisp III
LEVEL II CERTIFIED DESIGN PROFESSIONAL
CERTIFICATION NUMBER: 0000100336
ISSUED: 11/08/2025 EXPIRES: 11/08/2028

GEORGIA811 www.Georgia811.com

ESG ENGINEERING
6400 Peake Rd
Macon, GA 31210
Ph: (478) 474-4996
Fax: (478) 474-5045

GROUNDWATER WELLS #4 & #5

FOR THE
CITY OF FLOWERY BRANCH

REVISIONS

NO.	DESCRIPTION	DATE
1	ESPC SHEETS	11-7-25
2	BID SET OF PLANS	12-1-25
3	REVISED WITH CITY COMMENTS	12-5-25

BID SET

GEORGIA REGISTERED No. PE046341 PROFESSIONAL ENGINEER ANDREW D SWICEGOOD

DRAWN BY: DSC
CHECKED BY: ADS
DATE: OCT 2025
SCALE: SEE SCALE

CONTENT:

CIVIL:
INTERMEDIATE ESCP - WATER MAIN EXTENSION

SHEET NO: 2 3
C8.4

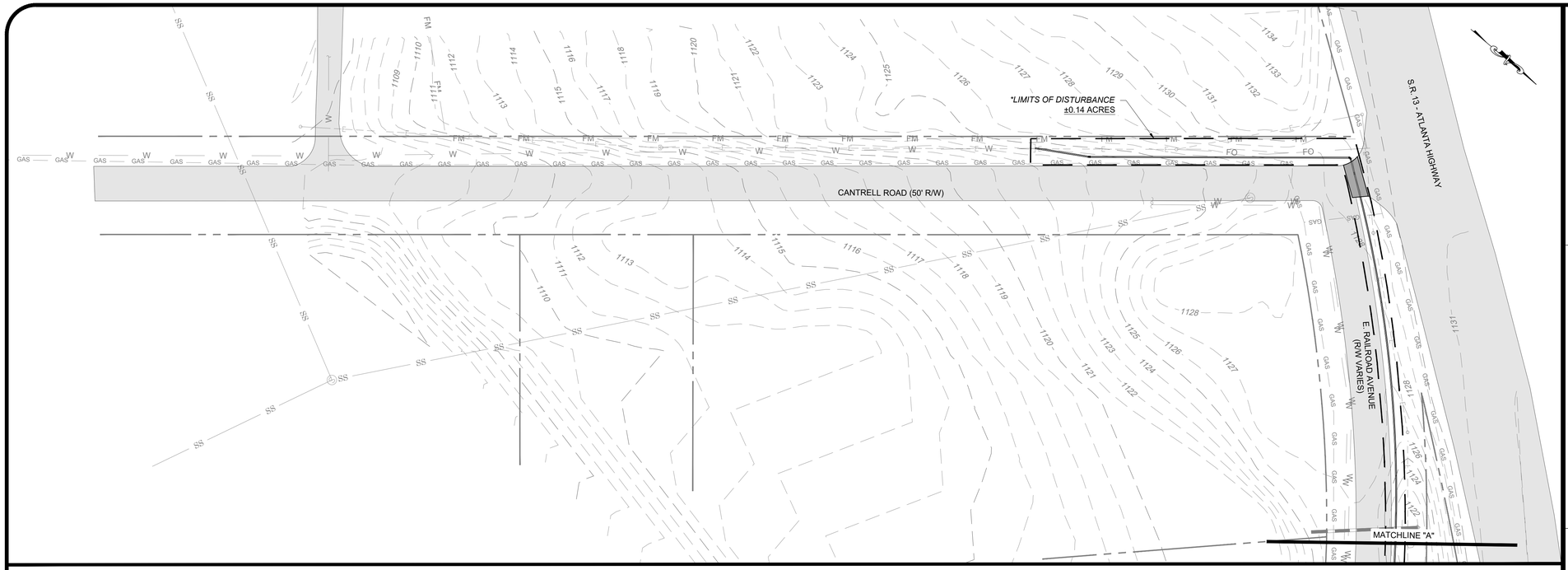

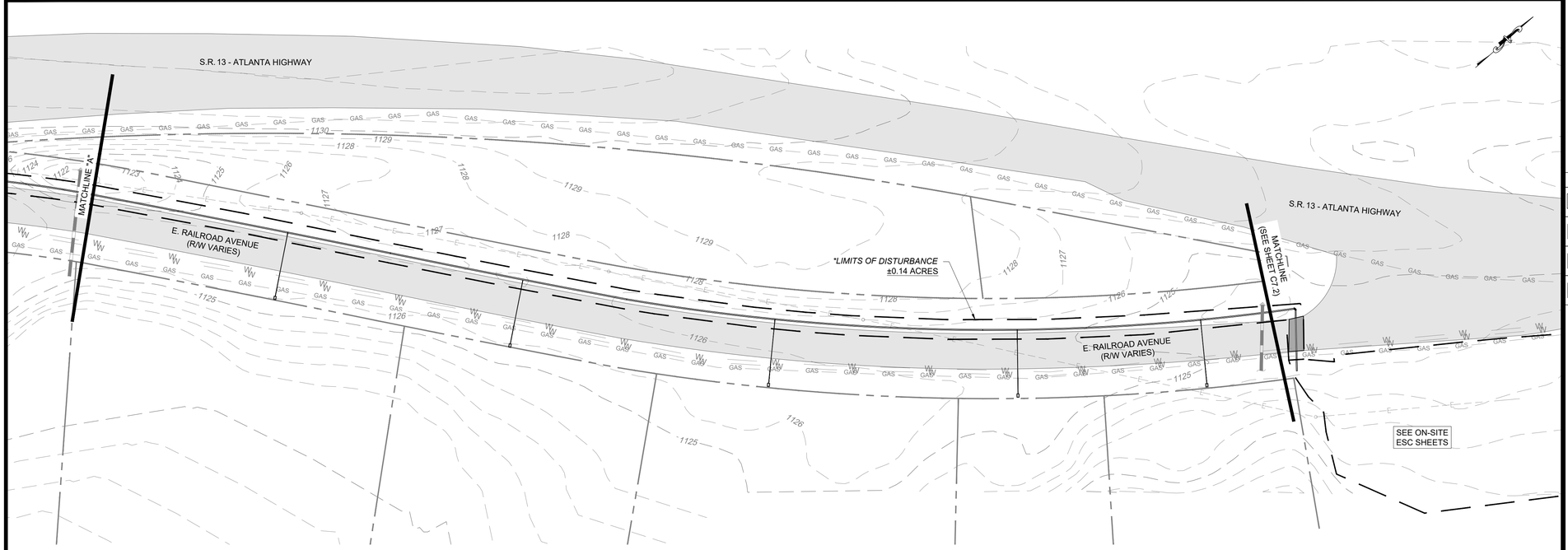

SITE INFORMATION	
PROJECT ADDRESS	4745 ATLANTA HWY
PARCEL NUMBER	08098 001001 THRU 08098 001004
PARCEL ZONING	H-B
PROJECT AREA	2.14 ACRES
BUILDING SETBACK	
FRONT	NONE
REAR	30'
SIDE	10'
LANDSCAPE SETBACK	
FRONT	10'
REAR	30'
SIDE	NONE

EROSION, SEDIMENTATION, & POLLUTION CONTROL STATEMENTS:

1. THE DESIGN PROFESSIONAL WHO PREPARED THE ES&PC PLAN IS TO INSPECT AND CERTIFY THE INSTALLATION OF THE INITIAL SEDIMENT STORAGE REQUIREMENTS AND PERIMETER CONTROL BMPS WITHIN 7 DAYS AFTER INSTALLATION.
2. NON-EXEMPT ACTIVITIES SHALL NOT BE CONDUCTED WITHIN THE 25 OR 50-FOOT UNDISTURBED STREAM BUFFERS AS MEASURED FROM THE POINT OF WRESTED VEGETATION OR WITHIN 25-FEET OF THE COASTAL MARSHLAND BUFFER AS MEASURED FROM THE JURISDICTIONAL DETERMINATION LINE WITHOUT FIRST ACQUIRING THE NECESSARY VARIANCES AND PERMITS.
3. AMENDMENTS/REVISIONS TO THE ES&PC PLAN WHICH HAVE A SIGNIFICANT EFFECT ON BMPS WITH A HYDRAULIC COMPONENT MUST BE CERTIFIED BY THE DESIGN PROFESSIONAL.
4. WASTE MATERIALS SHALL NOT BE DISCHARGED TO WATERS OF THE STATE, EXCEPT AS AUTHORIZED BY A SECTION 404 PERMIT.
5. THE ESCAPE OF SEDIMENT FROM THE SITE SHALL BE PREVENTED BY THE INSTALLATION OF EROSION AND SEDIMENT CONTROL MEASURES AND PRACTICES PRIOR TO LAND DISTURBING ACTIVITIES.
6. EROSION CONTROL MEASURES WILL BE MAINTAINED AT ALL TIMES. IF FULL IMPLEMENTATION OF THE APPROVED PLAN DOES NOT PROVIDE FOR EFFECTIVE EROSION CONTROL, ADDITIONAL EROSION AND SEDIMENT CONTROL MEASURES SHALL BE IMPLEMENTED TO CONTROL OR TREAT THE SEDIMENT SOURCE.
7. ANY DISTURBED AREA LEFT EXPOSED FOR A PERIOD GREATER THAN 14 DAYS SHALL BE STABILIZED WITH MULCH OR TEMPORARY SEEDING.

FINAL EROSION & SEDIMENTATION CONTROL NOTES:

1. CONTRACTOR SHALL INSTALL CONCRETE WASH AREA. CONCRETE WASH AREA SHALL BE USED FOR WASHDOWN OF TOOLS, CONCRETE MIXER CHUTES, HOPPERS AND REAR OF THE VEHICLES ONLY. WASHOUT OF THE DRUM AT THE CONSTRUCTION SITE IS PROHIBITED.
2. THE CONTRACTOR SHALL REMOVE ALL TEMPORARY BMPS ONCE FINAL STABILIZATION HAS BEEN MET.
3. THE CONTRACTOR SHALL PERFORM DAILY INSPECTIONS / MAINTENANCE OF ALL EROSION CONTROL BMPS. SEDIMENT LADEN RUNOFF SHALL BE CONTAINED AND TREATED ON SITE.
4. THE PRIMARY PERMITTEE WILL RETAIN THE DESIGN PROFESSIONAL DURING THE INTERMEDIATE GRADING AND DRAINAGE BMP PHASE, AS WELL AS, THE FINAL BMP PHASE.
4. THE TOTAL ON-SITE DISTURBED AREA FOR THE INITIAL PHASE IS 0.14 ACRES.
5. THE TOTAL PROJECT DISTURBED AREA (INCLUDING ON-SITE AREAS) IS 1.06 ACRES.

VEGETATIVE PRACTICES

CODE	PRACTICE	DETAIL	MAP SYMBOL	DESCRIPTION
Ds1	DISTURBED AREA STABILIZATION (WITH MULCHING ONLY)		Ds1	Establishing temporary protection for disturbed areas where seedlings may not have a suitable growing season to produce an erosion retarding cover.
Ds3	DISTURBED AREA STABILIZATION (WITH PERM SEEDING)		Ds3	Establishing a permanent vegetative cover such as trees, shrubs, vines, grasses, or legumes on disturbed areas.
Du	DUST CONTROL ON DISTURBED AREAS		Du	Controlling surface and air movement of dust on construction site, roadways and similar sites.
Fl-Co	FLOCCULANTS & COAGGULANTS		Fl-Co	Substance formulated to assist in the solids/liquid speparation of suspended particles in solution.

Ds1	Ds3
Du	Fl-Co

ALL DISTURBED AREAS

DISTURBED AREA CALCULATIONS:

PROJECT SITE: 2.14 AC
TOTAL DISTURBED AREA: 1.06 AC

DISTURBED AREA (OFF SITE): 0.14 AC
DISTURBED AREA (ON SITE): 0.92 AC
DISTURBED AREA = 0.92 AC / 2.14 AC = 43% OF PROJECT SITE
< 50% GOOD

IMPERVIOUS AREA = 1400 SF -> 0.032 AC / 1.06 AC = 3.0%

<50% GOOD
<15% GOOD

NRCS WEB SOIL SURVEY

SYMBOL	NAME	HYDROLOGIC SOIL GROUP	UNIFIED SOIL CLASSIFICATION	DEPTH
ApC	APPLING SANDY LOAM	B	Ap	0"-8"
			BA	8"-15"
			Bt	15"-42"
			BC	42"-55"
			C	55"-60"
PuD2	PACOLET SOILS	B	H1	0"-3"
			H2	3"-29"
			H3	29"-52"
			H4	52"-70"

APPENDIX 1 - IMPAIRED STREAM BMPS:

1. REDUCE THE TOTAL PLANNED SITE DISTURBANCE TO LESS THAN 50% IMPERVIOUS SURFACES (EXCLUDING ANY STATE-MANDATED BUFFER AREAS FROM SUCH CALCULATIONS). ALL CALCULATIONS MUST BE INCLUDED ON THE PLAN.
2. LIMIT THE AMOUNT OF DISTURBED AREA AT ANY ONE TIME TO NO GREATER THAN 25 ACRES OR 50% OF THE TOTAL PLANNED SITE, WHICHEVER IS LESS. ALL CALCULATIONS MUST BE INCLUDED ON THE PLAN.
3. USE FLOCCULENTS OR COAGULANTS AND/OR MULCH TO STABILIZE AREAS LEFT DISTURBED FOR MORE THAN FOURTEEN (14) CALENDAR DAYS IN ACCORDANCE WITH PART III D.1 OF THE CURRENT NPDES PERMITS.
4. LIMIT THE TOTAL PLANNED SITE DISTURBANCE TO LESS THAN 15% IMPERVIOUS SURFACES (EXCLUDING ANY STATE MANDATED BUFFER AREAS FROM SUCH CALCULATIONS). ALL CALCULATIONS MUST BE INCLUDED IN THE PLAN.

30' 15' 0' 30'
GRAPHIC SCALE 1" = 30'

GSWCC GEORGIA SOIL AND WATER CONSERVATION COMMISSION
Delmas S Crisp III
LEVEL II CERTIFIED DESIGN PROFESSIONAL
CERTIFICATION NUMBER: 0000100336
ISSUED: 11/08/2025 EXPIRES: 11/08/2028

GEORGIA811 www.Georgia811.com

ESG ENGINEERING
6400 Peake Rd
Macon, GA 31210
Ph: (478) 474-4996
Fax: (478) 474-5045

GROUNDWATER WELLS #4 & #5

FOR THE
CITY OF FLOWERY BRANCH

REVISIONS

NO.	DESCRIPTION	DATE
1	ESPC SHEETS	11-7-25
2	BID SET OF PLANS	12-1-25
3	REVISED WITH CITY COMMENTS	12-5-25

BID SET

GEORGIA REGISTERED No. PE046341 PROFESSIONAL ENGINEER ANDREW D SWICEGOOD

DRAWN BY: DSC
CHECKED BY: ADS
DATE: OCT 2025
SCALE: SEE SCALE

CONTENT:

CIVIL:
FINAL ESCP - WATER MAIN EXTENSION

SHEET NO: 2 3
C8.5

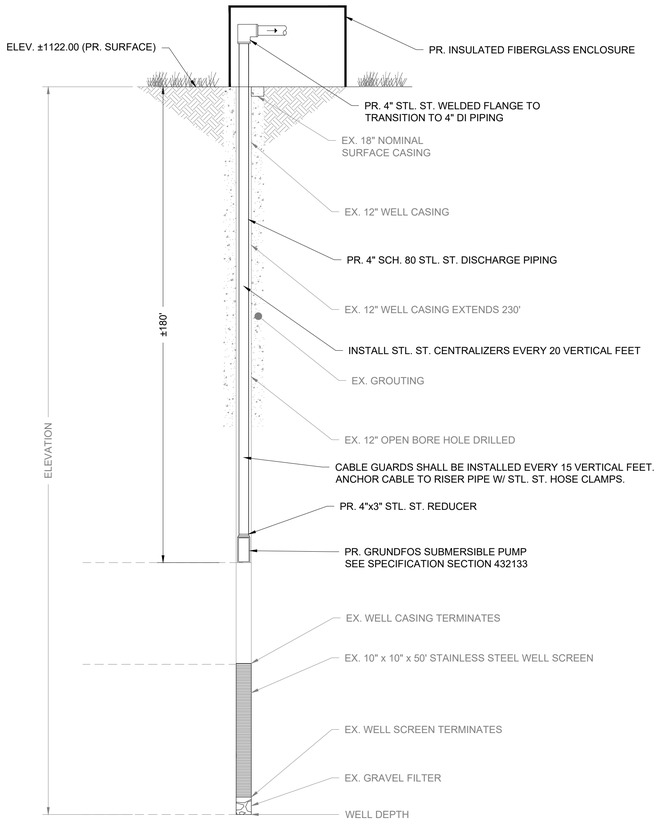

HENDERSON WELL SECTION
NOT TO SCALE

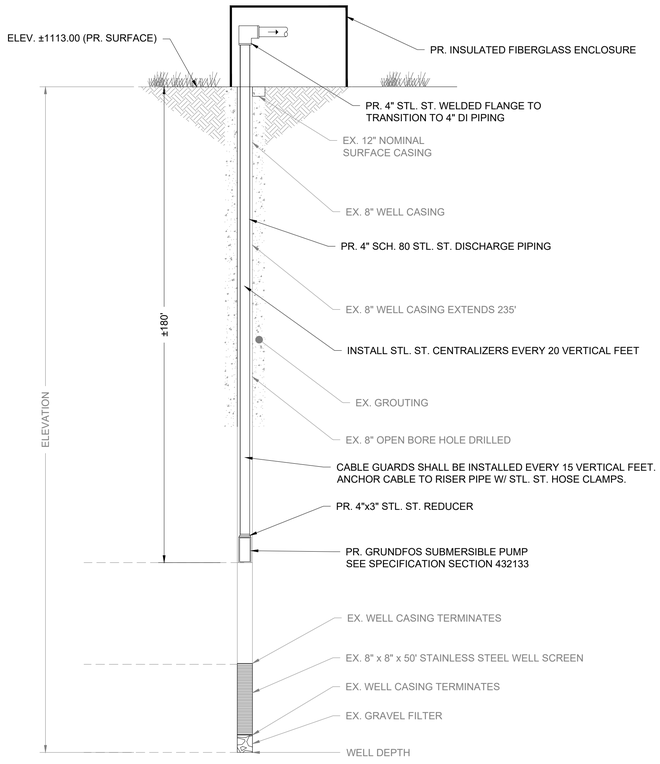

WATERSTONE WELL SECTION
NOT TO SCALE

NOTES:

1. PRECAST CONCRETE VAULT SHALL BE BY TINDALL OR APPROVED EQUIVALENT.
2. VAULT SHALL NOT BE LOCATED IN AREA SUBJECT TO GROUND WATER RUNOFF, STORM DRAIN COLLECTION AND DISCHARGE, OR AREAS PRONE TO CONSTANT WATER INFILTRATION. VAULT SHALL BE ABLE TO DRAIN BY GRAVITY OR BY ALTERNATE MEANS.
3. HATCH DOOR TO BE LOCATED OVER METER ASSEMBLY FOR EASE OF REMOVAL.
4. CONTRACTOR TO SEAL ALL OPENINGS IN VAULT WITH LS-200 LINK SEAL & NON-SHRINK GROUT.
5. FOR FINAL APPROVAL, ASSEMBLY MUST BE SET IN VAULT AS SPECIFIED. UNDER NO CONDITION WILL ANY CONNECTION BE ALLOWED BETWEEN THE SERVICE METER AND BACKFLOW PREVENTER USED FOR SYSTEM CONTAINMENT. BACKFLOW PREVENTER SHALL BE INSTALLED DOWNSTREAM OF ALL METERS.
6. ALL BACKFLOW PREVENTION DEVICES MUST BE SUCCESSFULLY TESTED PRIOR TO FINAL ACCEPTANCE BY THE ENGINEER.

MATERIALS		
ITEM	QTY	DESCRIPTION
1	1	6'x8' PRECAST CONCRETE VAULT
2	1	ALUMINUM HATCH W/ LOCKING HASP
3	1	WALL-MOUNTED STEEL LADDER
4	1	6" 709DCDA DOUBLE CHECK DETECTOR ASSEMBLY
5	1	#57 STONE DRAIN
6	3	STANDON S-89 FLANGED PIPE SUPPORT
7	2	6" FLxRJ DUCTILE IRON PIPE SPOOL PIECE
8	2	6" MECHANICAL JOINT W/ MEGALUG (OR EQUIVALENT)
9	2	LS-200 LINK SEAL

BACKFLOW VAULT NOTES
NOT-TO-SCALE

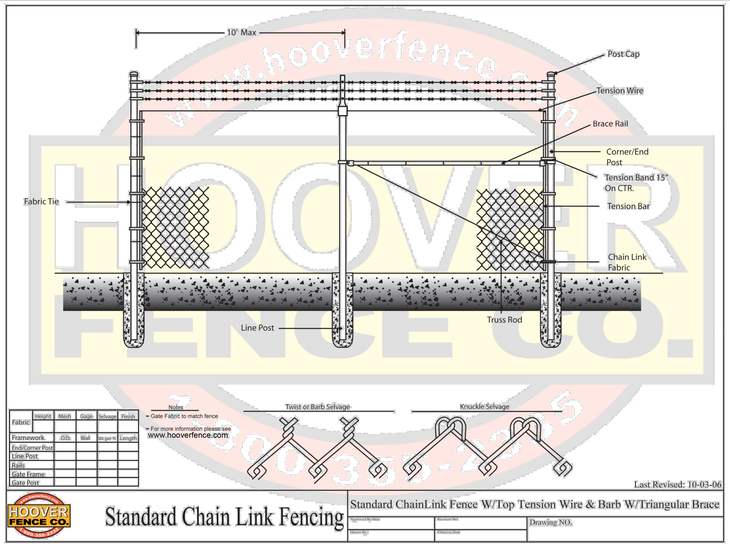

*OTHER EQUAL ALTERNATIVES CAN BE UTILIZED

CHAIN LINK FENCE
NOT TO SCALE

INSULATED FIBERGLASS ENCLOSURE SIZING GRID

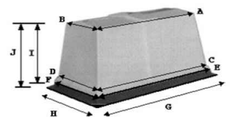

	OUTSIDE TOP	LOWER COVER	BOTTOM AT UPPER BASE	OUSIDE BASE FLANGE	COVER HEIGHT	OVERALL HEIGHT
MODEL #	A—B	C—D	E—F	G—H	I	J
D-103	20.75 x 6.00	27.25 x 12.25	30.25 x 14.75	33.75 x 18.25	21.5	23.25
D-104	31.75 x 5.75	38.25 x 12.25	41.25 x 15	44.25 x 18	20.75	23.5
D-102	22.25 x 15.75	26.5 x 20	29 x 22.25	33 x 26.25	25.75	28.5
D-102-39	22.25 x 15.75	25.75 x 19.25	31 x 25	34 x 27.75	25.75	39
D-105	41.25 x 17.50	47 x 22.75	49 x 25	53.5 x 29.5	23.5	25.5
D-105-36	41.25 x 17.50	47 x 22.75	52 x 28	55 x 31	23.5	36
D-100	30 x 20.75	41.5 x 32.5	44 x 35	48.5 x 39.75	34.75	37
D-106	39 x 31.25	49 x 40.5	50.75 x 42.5	54.75 x 46.5	40	43.5
D-207	48.75 x 32	55.5 x 37.5	59.5 x 40.5	65 x 46	35.5	37.25
D-207-48	48.75 x 32	55.5 x 37.5	63 x 44	65.5 x 47	35.5	48
D-108	64.5 x 31.5	68.5 x 34.5	70.5 x 36.5	74.5 x 40.5	44.25	46.25
D-301	74.63 x 46.5	82.5 x 54.5	86.5 x 59	90.5 x 63	26.75	33.75
D-303	74.63 x 46.5	82.5 x 54.5	86.5 x 59	90.5 x 63	46	53

GENERAL SPECIFICATIONS

The molded fiberglass enclosure shall be constructed with rigid thixotropic polyester resin and 30% chopped glass in 1-1/2 to 2-inch random patterns of 1/8 to 3/16 inch thick. The exterior finish shall be White isophthalic gel-coating .02 to .04 inches. The inside surface shall be insulated with 2 lb.-density sprayed-on polyurethane foam, producing an R-14 to R-19 composite value. The fiberglass base flange shall be hinged using 3-1/2-inch noncorrosive polycross link hinges or 3 x 4-inch stainless steel. A 30 lb. spring-loaded latch hooks to a 7-inch cast aluminum handle.

WELL HOUSE FIBERGLASS ENCLOSURE DETAIL
NOT-TO-SCALE

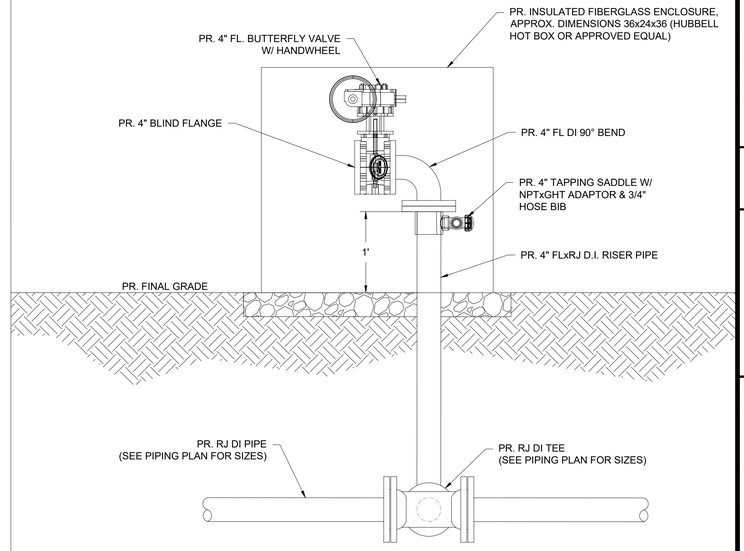

WELL BLOW-OFF VALVE DETAIL
NOT-TO-SCALE

ESG ENGINEERING
6400 Peake Rd
Macon, GA 31210
Ph: (478) 474-4996
Fax: (478) 474-5045

GROUNDWATER WELLS #4 & #5

FOR THE

CITY OF FLOWERY BRANCH

REVISIONS

NO.	DESCRIPTION	DATE
1	ESPC SHEETS	11-7-25
2	BID SET OF PLANS	12-1-25
3	REVISED WITH CITY COMMENTS	12-5-25

BID SET

GEORGIA REGISTERED No. PE046341 PROFESSIONAL ENGINEER ANDREW D SWICEGOOD

DRAWN BY: DSC
CHECKED BY: ADS
DATE: OCT 2025
SCALE: N.T.S.

CONTENT:

CONSTRUCTION DETAILS

SHEET NO: 3

C9.3

*DISTURBED AREA CALCULATIONS:

PROJECT SITE: 2.14 AC
TOTAL DISTURBED AREA: 1.06 AC

DISTURBED AREA (OFF SITE): 0.14 AC
DISTURBED AREA (ON SITE): 0.92 AC
DISTURBED AREA = 0.92 AC / 2.14 AC = 43% OF PROJECT SITE
< 50% GOOD

IMPERVIOUS AREA = 1400 SF -> 0.032 AC / 1.06 AC = 3.0%

<50% GOOD
<15% GOOD

STATE ROUTE 13
(100' RIGHT-OF-WAY)

RAILROAD AVENUE

AMERICAN HOLLY (TYP.)

FLOWERING DOGWOOD (TYP.)

EASTERN REDBUD (TYP.)

10' LANDSCAPING BUFFER

CHEMICAL FEED BUILDING
FFE: 1120.25
AREA: 392 SF

HENDERSON WELL

WATERSTONE WELL

CWA

10' BUILDING SETBACK

SD1

Tr

AREA
2.141 ACRES
PARCEL ID: 08098 001001, 08098 001002, 08098 001003, 08098 001004
CITY OF FLOWERY BRANCH GEORGIA
DEED BOOK 9253, PAGE 463
PLAT BOOK 876, PAGE 1

*LIMITS OF DISTURBANCE
0.92 AC (ON-SITE)
0.14 AC (OFF-SITE)
±1.06 AC (TOTAL)

75' IMPERVIOUS BUFFER

50' LOCAL STREAM BUFFER

25' STREAM BUFFER

30' BUILDING SETBACK

EX. WETLANDS
(APPROX.)

EX. STREAM
CENTERLINE

EX. TOWNHOUSE

VIREO DR

PARCEL ID: 08098A000206
WATER STONE CROSSING
COMMUNITY ASSOC INC
DEED BOOK 4312, PAGE 80
PLAT BOOK 816, PAGE 154A

PARCEL ID: 08098 01009
KOSWIRE INC.
4600 CANTRELL ROAD
FLOWERY BRANCH, GA 30542
26.72 ACRES

PARCEL ID: 08098 A000206
WATER STONE CROSSING
COMMUNITY ASSOCIATION
4611 BEACON RIDGE LANE
FLOWERY BRANCH, GA 30542
15.52 ACRES

LANDSCAPING NOTES:

1. THE CONTRACTOR SHALL LOCATE AND VERIFY THE EXISTENCE OF ALL UTILITIES PRIOR TO STARTING WORK.
2. THE CONTRACTOR SHALL SUPPLY ALL PLANT MATERIALS IN QUANTITIES SUFFICIENT TO COMPLETE THE PLANTING SHOWN ON ALL DRAWINGS.
3. ALL MATERIAL SHALL CONFORM TO THE GUIDELINES ESTABLISHED BY THE CURRENT AMERICAN STANDARD FOR NURSERY STOCK, PUBLISHED BY THE AMERICAN ASSOCIATION OF NURSERYMEN.
4. NO PLANT SHALL BE PUT INTO THE GROUND BEFORE ROUGH GRADING HAS BEEN COMPLETED AND APPROVED BY THE ENGINEER.
5. ALL PLANTS SHALL BE BALLED AND WRAPPED OR CONTAINER GROWN AS SPECIFIED. NO CONTAINER GROWN STOCK WILL BE ACCEPTED IF IT IS ROOT BOUND. ALL ROOT WRAPPING MATERIAL MADE OF SYNTHETICS OR PLASTICS SHALL BE REMOVED AT TIME OF PLANTING.
6. WITH CONTAINER GROWN STOCK, THE CONTAINER SHALL BE REMOVED AND THE CONTAINER BALL SHALL BE CUT THROUGH THE SURFACE IN TWO VERTICAL LOCATIONS.
7. ALL PLANTS AND STAKES SHALL BE SET PLUM UNLESS OTHERWISE SPECIFIED.
8. ALL PLANTS SHALL BE WATERED THOROUGHLY TWICE DURING THE FIRST 24-HOUR PERIOD AFTER PLANTING. ALL PLANTS SHALL THEN BE WATERED WEEKLY, IF NECESSARY, DURING THE FIRST GROWING SEASON.
9. THE LANDSCAPE CONTRACTOR SHALL REFER TO THE CONTRACT SPECIFICATIONS FOR ADDITIONAL REQUIREMENTS.
10. THE LANDSCAPE CONTRACTOR SHALL REFER TO THE PLANT LIST FOR SEASONAL REQUIREMENTS RELATED TO THE TIME OF PLANTING.
11. THE LANDSCAPE CONTRACTOR IS RESPONSIBLE FOR FULLY MAINTAINING ALL PLANTINGS INCLUDING BUT NOT LIMITED TO WATERING, SPRAYING, MULCHING, FERTILIZING, ETC. OF PLANTING AREAS & LAWNS UNTIL THE WORK IS ACCEPTED IN FULL BY THE OWNER.
12. ALL PLANTS AND PLANTING AREAS MUST BE COMPLETELY MULCHED AT A MINIMUM DEPTH OF 4" USING A SHREDDED HARDWOOD MULCH.
13. ALL SOIL USED FOR PLANTING SHALL CONSIST OF REGIONALLY APPROPRIATE SOILS.
14. TILL SOIL TO A DEPTH OF 4" MINIMUM.
15. REMOVE ALL ROCKS LARGER THAN 1" MEASURED IN LARGEST DIRECTION.

PLANT SCHEDULE

KEY	QTY	BOTANICAL NAME	COMMON NAME	SIZE	NOTES
SMALL TREES					
AG	6	ILEX OPACA	AMERICAN HOLLY	B&B	6-10' TALL AT INSTALLATION
MC	3	CORNUS FLORIDA	FLOWERING DOGWOOD	B&B	4-8' TALL AT INSTALLATION
MC	3	CERCIS CANADENSIS	EASTERN REDBUD	B&B	6-10' TALL AT INSTALLATION
TOTAL	12				

GRAPHIC SCALE 1" = 20'

GEORGIA811 www.Georgia811.com

ESG ENGINEERING
6400 Peake Rd
Macon, GA 31210
Ph: (478) 474-4996
Fax: (478) 474-5045

GROUNDWATER WELLS #4 & #5

FOR THE
CITY OF FLOWERY BRANCH

REVISIONS

NO.	DESCRIPTION	DATE
1	ESPC SHEETS	11-7-25
2	BID SET OF PLANS	12-1-25
3	REVISED WITH CITY COMMENTS	12-5-25

BID SET

GEORGIA REGISTERED No. PE046341 PROFESSIONAL ENGINEER ANDREW D SWICEGOOD

DRAWN BY: DSC
CHECKED BY: ADS
DATE: OCT 2025
SCALE: SEE SCALE

CONTENT:

LANDSCAPING:
LANDSCAPING PLAN

SHEET NO: 3
L1.0

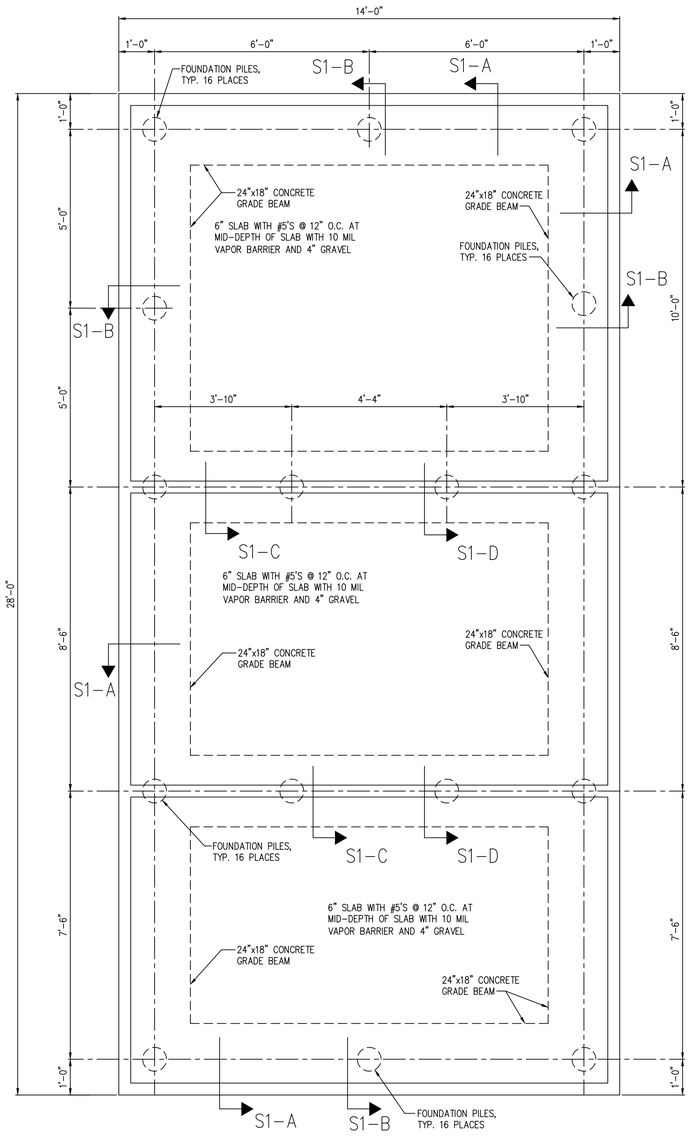

FOUNDATION PLAN

NO SCALE

NOTE: COORDINATE BUILDING ANCHORAGE REQUIREMENTS WITH MANUFACTURER'S DRAWINGS

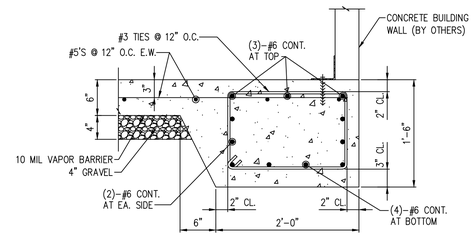

S1-A

NO SCALE

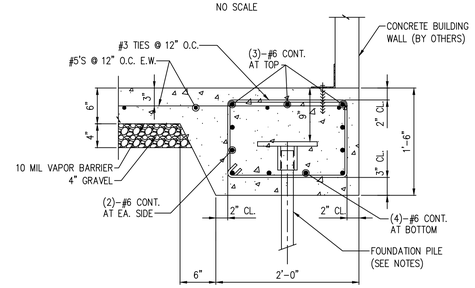

S1-B

NO SCALE

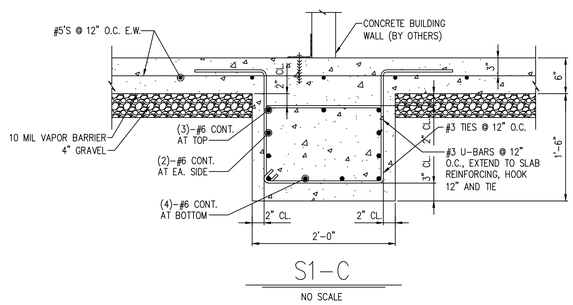

S1-C

NO SCALE

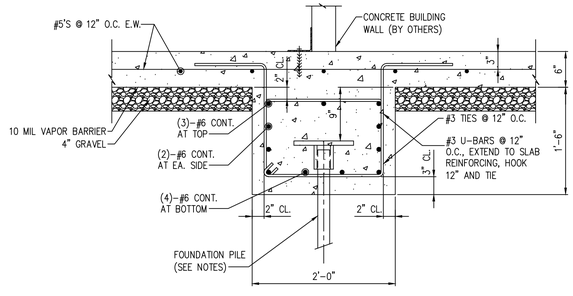

S1-D

NO SCALE

REINFORCED CONCRETE GENERAL NOTES

1. ALL CONCRETE WORK SHALL CONFORM TO ACI 301, "SPECIFICATIONS FOR STRUCTURAL CONCRETE FOR BUILDINGS". DESIGN IS BASED ON ACI 318, "BUILDING CODE REQUIREMENTS FOR STRUCTURAL CONCRETE."
2. CONCRETE SHALL BE NORMAL WEIGHT (150 PCF) AND SHALL DEVELOP A MINIMUM COMPRESSIVE STRENGTH OF 4500 PSI AT 28 DAYS.
3. SUBMIT CONCRETE MIX DESIGNS FOR REVIEW, IN ACCORDANCE WITH ACI 318 TO THE EOR AND TESTING AGENCY.
4. THE PROPOSED MATERIALS AND MIX DESIGN SHALL BE FULLY DOCUMENTED AND REVIEWED. RESPONSIBILITY FOR OBTAINING THE REQUIRED DESIGN STRENGTH IS THE CONTRACTOR'S.
5. USE OF CALCIUM CHLORIDE, CHLORIDE IONS, OR OTHER SALTS IN CONCRETE IS NOT PERMITTED.
6. THE AIR CONTENT AT THE POINT OF PLACEMENT SHALL BE PER ACI 318 TABLE 4.2.1 FOR MODERATE EXPOSURE.
7. THE TESTING AGENCY SHALL SAMPLE AND TEST EACH 100 CU. YARDS OR FRACTION THEREOF OF EACH CLASS OF CONCRETE PLACED EACH DAY. SAMPLE CONCRETE IN ACCORDANCE WITH ASTM C172. PERFORM THE FOLLOWING TESTS IN ACCORDANCE WITH THE INDICATED STANDARD:

   SLUMP: ASTM C143

   AIR CONTENT: ASTM C231 (NORMAL WEIGHT CONCRETE) ASTM C173 (LIGHT WEIGHT CONCRETE)

   COMPRESSIVE STRENGTH: ASTM C39, WITH ONE CYLINDER AT 7 DAYS, 2 CYLINDERS AT 28 DAYS, AND ONE SPECIMEN HELD IN RESERVE.

   CONCRETE TEMPERATURE: ASTM C1064

   UNIT WEIGHT: ASTM C567
8. MOIST CURE CONCRETE WITH MOISTURE PROTECTIVE COVER FOR A MINIMUM OF 7 DAYS. CURING COMPOUNDS PERMITTED IF COMPATIBLE WITH ANY PLANNED FLOOR FINISHES
9. REINFORCING STEEL SHALL CONFORM TO ASTM A615, GRADE 60, UNLESS NOTED OTHERWISE.
10. TIE ALL REINFORCING STEEL AND EMBEDMENTS SECURELY IN PLACE PRIOR TO PLACING CONCRETE. PROVIDE SUFFICIENT SUPPORTS TO MAINTAIN THE POSITION OF REINFORCEMENT WITHIN SPECIFIED TOLERANCES DURING ALL CONSTRUCTION ACTIVITIES. "STICKING" DOWELS INTO WET CONCRETE IS NOT PERMITTED.
11. REINFORCING STEEL SHALL HAVE THE FOLLOWING CONCRETE COVER UNLESS NOTED OTHERWISE:

    CONCRETE CAST AGAINST EARTH (NOT FORMED): 3"

    FORMED CONCRETE EXPOSED TO EARTH OR WEATHER
    #6 BARS THROUGH #12 BARS 2"
    #5 BARS AND SMALLER 2"

    CONCRETE NOT EXPOSED TO EARTH OR WEATHER
    SLABS AND WALLS 1"
12. DO NOT WELD OR TACK WELD REINFORCING STEEL UNLESS APPROVED OR DIRECTED BY THE STRUCTURAL ENGINEER.

SOIL PARAMETERS

1. SOIL PARAMETERS
   A. SHALLOW FOUNDATIONS WERE ASSUMED TO BE INSUFFICIENT TO SUPPORT BUILDING DUE TO POOR SOIL CONDITIONS. DEEP FOUNDATION ELEMENTS ARE REQUIRED TO SUPPORT THE BUILDING.
   B. RECOMMENDATION IS BASED ON THE FOLLOWING SOILS REPORT:
      DRINKING WATER SITE
      GEOTECHNICAL ENGINEERING REPORT
      TERRACON PROJECT NO. HN255025
      DATED APRIL 3, 2025
2. IF SITE CONDITIONS DIFFER FROM THOSE INDICATED, THE DESIGN PROFESSIONAL SHALL BE NOTIFIED IMMEDIATELY.
3. ALL FOUNDATION WORK SHALL BE DONE 'IN THE DRY'.

GENERAL NOTES

1. DESIGN LOADS
   A. BUILDING LOAD ..... 120,000 LBS.
   B. SLAB LIVE LOAD ..... 100 PSF
   C. ROOF LIVE LOAD ..... 20 PSF
2. CODES
   A. INTERNATIONAL BUILDING CODE, 2018 ED. WITH LATEST GEORGIA AMENDMENTS.
   B. REINFORCED CONCRETE: ACI 318-14.
3. FOUNDATION DESIGN ASSUMES ALL INTERIOR WALLS ARE LOAD BEARING AND BUILDING WEIGHT IS UNIFORMLY DISTRIBUTED TO FOUNDATION.
4. SHOP DRAWINGS GENERAL NOTES: THE PLANS, SECTIONS, AND DETAILS PROVIDED AS PART OF THE CONTRACT DOCUMENTS SHALL NOT BE USED IN A REPRODUCIBLE FORM AS PART OF THE SHOP DRAWINGS. ALL FABRICATORS & SUPPLIERS SHALL ANTICIPATE THAT REVISIONS TO SUBMITTALS MAY BE REQUIRED. THIS INCLUDES MODIFICATIONS TO DETAILS THAT ARE CHANGED FOR COORDINATION PURPOSES. NO ADDITIONAL FEES ARE PERMITTED FOR REVISING SUBMITTALS FOR WORK DESCRIBED IN THE CONTRACT DOCUMENTS.
5. CONTRACTOR TO FIELD VERIFY ALL DIMENSIONS AND ELEVATIONS BEFORE BEGINNING CONSTRUCTION.
6. SEE ESG DRAWINGS AND SPECIFICATIONS FOR REQUIREMENTS ON FLOOR AND WALL COATINGS

FOUNDATION PILE NOTES (PER UNIT)

1. IT IS THE INTENT OF THIS CONTRACT REQUIREMENT TO PROVIDE:
   A. VERTICAL FOUNDATION PILES (16 TOTAL) OF SIZE AND DETAIL THAT WILL ACHIEVE NOT LESS THAN 50,000 POUNDS ULTIMATE (25,000 POUNDS WORKING) COMPRESSION CAPACITY, AND 10,000 POUNDS ULTIMATE (5,000 POUNDS WORKING) TENSION CAPACITY, BEFORE FAILURE.
2. INSTALLATION OF PILES IS TO BE PERFORMED BY A PILE CONTRACTOR APPROVED BY THE OWNER.
3. MINIMUM VERTICAL PILE LENGTH SHALL BE 28 FEET REGARDLESS OF FIELD DETERMINED EXCESS CAPABILITY, EXCEPT THAT, IF DURING CONSTRUCTION PROGRESS, IT IS DETERMINED THAT ANY EXCESSIVE CAPACITY ACHIEVED DURING INSTALLATION IS CAUSING DELAYS OR UNDUE HARDSHIP, THE OWNER RESERVES THE RIGHT TO WAIVE THIS REQUIREMENT (BUT NOT BELOW SPECIFIED ULTIMATE CAPACITY) WITH APPROPRIATE CONTRACT AND CONTRACT PRICE CHANGES AGREED UPON BY OWNER AND CONTRACTOR.
4. PILE CONTRACTOR SHALL HAVE ALL REASONABLE ACCESS TO THE SITE, BOTH BEFORE AND AFTER SUCCESSFUL BIDDING, BUT SCHEDULING SHALL BE COORDINATED WITH THE EOR/OWNER. ALL INSURANCE, SAFETY, LEGAL, AND OTHER AGREED UPON REQUIREMENTS SHALL BE MET BY THE PILE CONTRACTOR BEFORE PERFORMING ANY WORK. IT SHALL BE THE RESPONSIBILITY OF THE PILE CONTRACTOR TO REVIEW THE SITE TO THEIR SATISFACTION PRIOR TO BIDDING. NO CONTRACT CHANGES ARE PERMISSIBLE BECAUSE OF LACK OF KNOWLEDGE OF REASONABLY ACCESSIBLE FEATURES ON THE SITE.
5. SOIL TEST REPORTS ARE INCLUDED IN THE BID PACKAGE. ANY INFERENCE DRAWN FROM THE REPORT, EXCEPT WHERE THE REPORT MIGHT BE FOUND ERRONEOUS, SHALL BE THE RESPONSIBILITY OF THE PILE CONTRACTOR.
6. DESIGN OF ALL PILE COMPONENTS TO MEET REQUIREMENTS SHALL BE PERFORMED BY A PROFESSIONAL ENGINEER REGISTERED IN THE STATE OF GEORGIA, EITHER EMPLOYED BY, OR RETAINED BY THE CONTRACTOR, WHO IS QUALIFIED AND EXPERIENCED IN THE EVALUATION OF THE PILE SYSTEM. SIGNED AND SEALED CALCULATIONS SHALL BE PROVIDED TO THE EOR/OWNER FOR REVIEW. CALCULATIONS SHALL INCLUDE AN ANALYSIS OF THE PILE FOR BUCKLING.
7. PILE CONTRACTOR SHALL PROVIDE WITH THEIR BID A RESUME OF JOBS OF SIMILAR DETAIL AND QUANTITY THAT THEY HAVE PERFORMED.
8. WORK SHALL BE PERFORMED IN AN ORDERLY AND WORKMANLIKE FASHION. SCHEDULING SHALL BE MAINTAINED. PILES SHALL BE LOCATED WITHIN APPROXIMATELY 3" OF THEIR SHOWN LOCATION, AND SHALL BE BATTERED AS SHOWN. PILE CONTRACTOR SHALL PROVIDE ALL LABOR AND MATERIALS AS REQUIRED AND SHALL HAVE A FULL-TIME SUPERINTENDENT ON SITE FOR THE DURATION OF CONSTRUCTION. DAILY RECORDS SHALL BE MADE AND MAINTAINED ON SITE. RECORDS SHALL BE MADE AVAILABLE TO EOR UPON REQUEST. RECORDS SHALL INCLUDE PILE DEPTH TORQUE LOG AND ESTIMATED CAPACITY.
9. AT THE END OF EACH WORK DAY, THE AREA AROUND THE FOUNDATION SITE SHALL BE LEFT IN A CONDITION THAT WILL NOT INTERFERE WITH OTHER TRADES OR THAT WILL NOT POSE A DANGER TO OTHERS ON SITE.
10. CONTRACTOR SHALL PROPOSE AN ALTERNATIVE ADDITIVE TEST PILE PROGRAM AT THE BEGINNING OF THE PROJECT. THE PROGRAM SHALL CONFIRM THE PILE DESIGN MEETS THE REQUIRED COMPRESSION AND TENSION CAPACITY. TESTING SHALL BE OBSERVED BY THE OWNER AND/OR THE OWNER'S REPRESENTATIVE.

NO.	DESCRIPTION	DATE	BY
0	ISSUED FOR CONSTRUCTION	12.4.25	MNE

GEORGIA REGISTERED No. PE000062 STRUCTURAL ENGINEER MATTHEW N. ELLIS

12.4.25
Pi-Tech, Inc. COA#PEF003000
COA Expiration: 6.30.2026

DRAWN BY: PEJ
CHECKED BY: MNE
DATE: 12.4.2025
SCALE: AS SHOWN

PI-TECH, INC.
115 FOREST HILL RD
MACON, GA 31210
478.743.5600
www.pi-techinc.com

FLOWERY BRANCH CHEM. BUILDING
FOR
ESG ENGINEERING
MACON, GA

SHEET NO. S1
SHEET 1 OF 1

ADDENDUM #2
December 11, 2025

PROJECT: ***Groundwater Wells #4 & #5***

OWNER: City of Flowery Branch

BID DATE: Thursday, December 18, 2025 at 2:00 P.M.

The Bidder is hereby provided the following information:

1. **MISCELLANOUS INFORMATION**

   a. Both the Henderson & Waterstone well pumps shall be equipped with reduced-voltage soft starters. Cost shall be included under the "Groundwater Wells #4 & #5 Improvements Complete" line item in the Bid Form.

   b. Concrete pad for the proposed diesel generator shall be constructed per Electrical Plan sheet E6.1; Subgrade beneath pad shall consist of 12" select fill material compacted to 98% max. dry density, Tensar NX-750 geogrid, and 12" of #57 stone bedding.

   c. Unsuitable soils are present on site – Subgrade beneath proposed structures, pavements, and gravel drive/pad areas will require a minimum of 12" select, compacted import fill material beneath the respective typical section. Contractor shall assume responsibility for undercutting all such areas to the required depth and haul off and dispose of material off-site prior to placing any import fill material. Payment shall be included under the line item in the Bid Form for "Groundwater Wells #4 & #5 Improvements Complete". See Terracon geotechnical report for additional information.

   d. The interface between the covered steel structure foundation/footer and concrete slab/walking area, as well as between the building foundation and concrete walking area shall have continuous bituminous type expansion joints installed conforming to the requirements of ASTM D 994.

   e. Georgia Power will be responsible for bringing power to the site and providing meter. Contractor shall be responsible for setting meter and coordinating electrical service establishment on site – contact Thad Loveless with GA Power at 470-892-0193 (ETLOVELE@southernco.com). All costs associated with such coordination shall be included under the line item in the Bid Form for "Groundwater Wells #4 & #5 Improvements Complete".

2. CONTRACT DOCUMENTS, SECTION 00410 – BID FORM

a. A new Section 00410 – Bid Form has been issued – see attached.

3. TECHNICAL SPECIFICATIONS, SECTION 01020 – ALLOWANCES

a. A new Section 01020 – Allowances has been issued – see attached.

4. TECHNICAL SPECIFICATIONS, ELECTRICAL

a. Specifications for all electrical work to be performed has been issued – see attached.

5. CONSTRUCTION PLANS

a. See attached Construction Plan Sheets:

- Utility Plan C4.0
- Structural plan sheets S1 & S2
- Mechanical plan sheets M0.1, M0.2 & M1.0
- Electrical plan sheets E1.0, E1.1 – E5.1, E6.0 & E6.1
- Plumbing plan sheets P0.1 & P1.0

All bidders shall acknowledge receipt of all addenda issued where indicated on the bid sheets. (Section 00410 – Bid Form, Page 2)

ATTENTION

ALL BIDDERS SHALL ACKNOWLEDGE RECEIPT OF ALL ADDENDA ISSUED WHERE INDICATED ON THE BID SHEETS. (SECTION 00410 – BID FORM, PAGE 2)

BIDDERS ARE MADE AWARE THAT IT IS THEIR RESPONSIBILITY TO VERIFY THAT ANY AND ALL ADDENDA HAVE BEEN RECEIVED PRIOR TO THE SUBMISSION OF THEIR BID. IN THE EVENT ANY BIDDER FAILS TO ACKNOWLEDGE RECEIPT OF ANY SUCH ADDENDA IN THE SPACE PROVIDED ON THE BID FORM, THEIR BID WILL BE CONSIDERED NONRESPONSIVE.

END ADDENDUM

SECTION 00410
BID FORM

PROJECT IDENTIFICATION:

Groundwater Wells #4 & #5

CONTRACT IDENTIFICATION AND NUMBER:

F0002.018

THIS BID IS SUBMITTED TO:

City of Flowery Branch
5410 Pine Street
Flowery Branch, GA 30542

THIS BID IS SUBMITTED FROM:

Bidder: _____

Address: _____

_____

Phone: _____

State of Georgia Business License No.: _____

1. The undersigned Bidder proposes and agrees, if this Bid is accepted, to enter into an agreement with Owner in the form included in the Contract Documents to perform and furnish all Work as specified or indicated in the Contract Documents for the Contract Price and within the Contract Time indicated in this Bid and in accordance with the other terms and conditions of the Contract Documents.

2. Bidder accepts all of the terms and conditions of the Advertisement or Invitation to Bid and Instructions to Bidders, including without limitation those dealing with the disposition of Bid security. This Bid will remain subject to acceptance for 60 days after the day of Bid opening. Bidder will sign and submit the Agreement with the Bonds and other documents required by the Bidding Requirements within fifteen days after the date of Owner's Notice of Award.

3. In submitting this Bid, Bidder represents, as more fully set forth in the Agreement, that:

(a) Bidder has examined copies of all the Bidding Documents and of the following Addenda (receipt of all which is hereby acknowledged):

Date	Addendum Number

(b) Bidder has familiarized itself with the nature and extent of the Contract Documents, Work, site, locality, and all local conditions and Laws and Regulations that in any manner may affect cost, progress, performance or furnishing of the Work.

(c) Bidder has studied carefully all reports and drawings of subsurface conditions and drawings of physical conditions which are identified in the Supplementary Conditions as provided in Paragraph 4.2 of the General Conditions, and accepts the determination set forth in Paragraph 4.2.1 of the Supplementary Conditions of the extent of the technical data contained in such reports and drawings upon which Bidder is entitled to rely.

(d) Bidder has obtained and carefully studied (or assumes responsibility for obtaining and carefully studying) all such examinations, investigations, explorations, tests and studies (in addition to or to supplement those referred to in (c) above) which pertain to the subsurface or physical conditions at the site or otherwise may affect the cost, progress, performance or furnishing of the Work as Bidder considers necessary for the performance or furnishing of the Work at the Contract Price, within the Contract Time and in accordance with the other terms and conditions of the Contract Documents, including specifically the provisions of Paragraph 4.2 of the General Conditions; and no additional examinations, investigations, explorations, tests, reports or similar information or data are or will be required by Bidder for such purposes.

(e) Bidder has reviewed and checked all information and data shown or indicated on the Contract Documents with respect to existing Underground Facilities at or contiguous to the site and assumes responsibility for the accurate location of

said Underground Facilities. No additional examinations, investigations, explorations, tests, reports or similar information or data in respect of said Underground Facilities are or will be required by Bidder in order to perform and furnish the Work at the Contract Price, within the Contract Time and in accordance with the other terms and conditions of the Contract Documents, including specifically the provisions of Paragraph 4.3 of the General Conditions.

(f) Bidder has correlated the results of all such observations, examinations, investigations, explorations, tests, reports and studies with the terms and conditions of the Contract Documents.

Bidder has given Engineer written notice of all conflicts, errors or discrepancies that it has discovered in the Contract Documents and the written resolution thereof by Engineer is acceptable to Bidder.

(g) This Bid is genuine and not made in the interest of or on behalf of any undisclosed person, firm or corporation and is not submitted in conformity with an agreement or rules of any group, association, organization or corporation; Bidder has not directly or indirectly induced or solicited any other corporation to refrain from bidding; and Bidder has not sought by collusion to obtain for itself any advantage over any other Bidder or over Owner.

(h) Bidder agrees to commence work under this Agreement on or before a date to be specified in a written "Notice to Proceed" of the Owner.

(i) Bidder accepts the provisions of the Agreement as to liquidated damages in the event of failure to complete the Work on time.

4. Bidder will complete the Work in accordance with the Contract Documents for the following price(s):

The Contractor is directed to Section 01025 “Measurement and Payment” for the methods and limits for payment to the Contractor for the pay items listed below:

(A) BASE BID: Groundwater Wells #4 & #5

BID FORM BEGINS ON PAGE 4

BID FORM					
ITEM NO	QTY	UNIT	DESCRIPTION	UNIT PRICE	TOTAL PRICE
1	80	CY	Rock Removal - Base	$ 75.00	$ 6,000.00
2	80	CY	Rock Removal - Premium		
3	1	LS	Clearing & Grubbing		
4	1	LS	Demolition		
5	1	LS	Groundwater Wells #4 & #5 Improvements Complete (see Section 01025 for limits and extents of payment under this line item)		
6	1	LS	Diesel Generator Installation		
7	1	EA	3-Way Fire Hydrant Assembly		
8	1	EA	4” Gate Valve w/ Box & Cover		
9	1	EA	8” Gate Valve w/ Box & Cover		
10	50	LF	4" RJ DIP Water Main - Open Cut		
11	70	LF	4" RJ DIP Water Main - Horizontal Directional Drill		
12	1,580	LF	8" RJ DIP Water Main - Open Cut Cross-Country		
13	45	LF	8" RJ DIP Water Main - Open Cut Roads		
14	145	LF	8" DR-11 (DIPS) HDPE Water Main - Horizontal Directional Drill		
15	1	EA	2" Tapping Sleeve & Valve (incl. Valve Box & Cover)		
16	1	EA	6" Tapping Sleeve & Valve (incl. Valve Box & Cover)		
17	1	EA	Cut, Cap, & Abandon Ex. 2" Water Line		
18	5	EA	Longside Water Service Transfer		
19	1	LS	Traffic Control		
20	1	LS	Erosion & Sediment Control Complete		

21	1	LS	Landscaping Complete		
22	1	LS	Groundwater Wells #4 & #5 Rehabilitation Allowance	$ 115,000.00	$ 115,000.00
23	1	LS	Supplemental Work Allowance (SWA)	$ 100,000.00	$ 100,000.00
			TOTAL BASE BID AMOUNT:		

Bidder agrees to furnish all labor, materials, and equipment necessary to construct the **Groundwater Wells #4 & #5** for the City of Flowery Branch for the sum of

_____Dollars

($_____).

6. Bidder agrees that the Work will be substantially complete and ready for final payment in accordance with the completion time/dates provided in the Contract and any Addenda.

7. Bidder accepts the provisions of the Agreement as to liquidated damages in the event of failure to complete the Work within the times specified in the Agreement.

8. The following documents are attached to and made a condition of this Bid:
   a. Required Bid Security in the form of 5% of the Bid Total Price.

9. The undersigned further agrees that in case of failure on his part to execute the said contract and the Bond within fifteen (15) consecutive calendar days after written notice being given of the award of the contract, the check or bid bond accompanying this bid, and the monies payable thereon shall be paid into the funds of the Owner as liquidated damages for such failure, otherwise, the check or bid bond accompanying this proposal shall be returned to the undersigned.

10. Communications concerning this Bid shall be addressed to:
    ESG Engineering, LLC
    6400 Peake Rd
    Macon, GA 31210
    Attn: Rachael Crowell
    rcrowell@esgengineering.com

11. Terms used in this Bid which are defined in the General Conditions or Instructions to Bidders will have the meanings indicated in the General Conditions or Instructions to Bidders.

SUBMITTED on _____, 20____.

BIDDER: _____

BY: _____

TITLE: _____

STATE CONTRACTOR
LICENSE NO. _____

ADDRESS: _____

_____

_____

PHONE: _____

Seal: (if bid by a Corporation)

END OF SECTION

SECTION 01020
ALLOWANCES

PART 1 – GENERAL

A. The Contractor shall include in his bid proposal the allowances stated herein. The final amount of any allowance item listed herein shall be adjusted accordingly by change order to reflect actual cost.

PART 2 – PRODUCTS

A. The Contractor shall allow the sum indicated in the Bid Form for Supplemental Work Allowance (SWA). SWA shall be utilized to incorporate cost changes for any additional authorized work into the scope of work up to the amount in the Bid Form. Contract change orders shall be enforced for contract changes over and above this amount. These SWA's shall authorize the Contractor to perform additions to the work, but the Contractor shall perform no work until written authorization has been delivered to the Contractor by the Owner/Engineer. Contractor should not expect that any SWA's will be issued; SWA's shall be issued at the discretion of the Owner only.

The value of any work covered by a SWA shall be determined in one of the following ways:

1. Where the work involved is covered by unit prices contained in the Contract Documents, by application of unit prices to the quantities of the item involved (subject to the provisions of the General Conditions).

2. By mutual acceptance of a lump sum by Contractor and the Owner.

3. On the basis of the cost of the work plus a Contractor's Fee for overhead and profit. This basis shall be as established for Change Orders in General Conditions.

B. The Contractor shall allow the sum indicated in the Bid Form for Groundwater Wells #4 & #5 Rehabilitation Allowance. The Groundwater Wells #4 & #5 Rehabilitation Allowance shall be utilized to engage the services of a hydrogeologist to provide testing oversight/inspection and to prepare and submit final water quality/pump test report for each well; allowance shall also be used to engage a laboratory and sub-contractor(s) in conjunction with the selected hydrogeologist to provide sediment removal, air burst cleaning, post-cleaning CCTV, disinfection, 72-hr pump test, data measurements/reporting/record keeping, water quality laboratory

testing, and all associated and ancillary work required per Spec. Section 80001. Should the Contractor require any overhead or profit for allowing such a sum within their bid, that amount should be added into the line item of their choosing. Any additional cost associated with coordinating the work shall be included under the line item of the Contractor's choosing.

PART 3 – EXECUTION

A. Amounts stated shall include all taxes, coordination and handling that may be required to provide the equipment to the owner. Owner may choose to delay the purchase of equipment to the end of the Contract.

END OF SECTION

SECTION 260000
GENERAL

1.01 CONTRACT DOCUMENTS:

A. All work of Section 26 shall comply with the requirements of:

1. General Conditions
2. Supplementary General Conditions
3. General Requirements
4. Specifications
5. Drawings
6. Modifications incorporated in the documents before their execution.

1.02 WORK INCLUDED

A. This Division of the specifications (26 00 00) covers the complete interior and exterior electrical system for all work shown on the drawings as specified herein providing all material, labor and equipment required for the installation of the electrical systems complete and in operating condition.

B. Include in the electrical work all the necessary supervision and the issuing of all coordinating information to any other trades who are supplying work to accommodate the electrical installations.

1.03 DRAWINGS

A. The drawings for electrical work utilize symbols and schematic diagrams which have no dimensional significance. The work shall therefore, be installed to fulfill the diagrammatic intent expressed on the electrical drawings.

B. Review architectural drawings for door swings, cabinets, counters, moldings and built-in equipment, conditions indicated on architectural drawings shall govern. Prior to rough-in of receptacles and systems outlets, refer to architectural casework drawings for rough-in coordination.

C. Coordinate electrical work with the architectural details, floor plans, elevations, structural and mechanical drawings. Provide fittings, junction boxes and accessories to meet conditions.

D. Do not scale drawings. Dimensions for layout of equipment, or spaces shall be obtained from architectural, structural or mechanical drawings unless specifically indicated on the electrical drawings.

E. Discrepancies shown on different drawings, between drawings and specifications or between drawings and field conditions shall be promptly brought to the attention of the Engineer.

F. Provide as used on the drawings and in the specifications shall mean, furnish, install, connect, adjust and test.

G. The drawings and specifications are complimentary and any work or material shown in one and omitted in the other, or described in the one and not shown in the other, or which may be implied by both or either, shall be furnished as though shown on both, in order to give a complete and first class installation.

1.04 SITE INVESTIGATION

A. Potential Contractors shall visit the project site prior to bid date to satisfy themselves as to the existing conditions and distances which may effect the cost of the project. Where work under this project requires extension, relocation, re-connecting or modifications to existing equipment or systems, the existing equipment or systems, shall be restored to their original condition, with the exception of the work under this contract, before the completion of this project.

1.05 SHOP DRAWINGS

A. Submit for approval by the Engineer all materials and equipment to be incorporated in the electrical work.

B. Submit only shop drawings which comply with the contract documents. Shop drawings shall be checked and corrected by the Contractor before they are submitted to the Engineer. Shop drawings that are not corrected by the Contractor shall be returned for correction without detailed notations by the Engineer as to the necessary corrections.

C. Mark each individual submittal item to show specification section which pertains to the item.

D. Submit information as required under SUBMITTALS, for each of the individual electrical sections of the specifications.

E. Data submitted shall contain all information required to indicate compliance with equipment specified.

F. Submit field information drawings to explain fully all procedures involved in erecting, mounting and connecting all items of equipment which differ from that specified.

G. When Shop Drawings are reviewed, some errors may be detected but others may be overlooked. This does not grant the Contractor permission to proceed in error. Regardless of any information contained in the Shop Drawings, the requirements of the Drawings and Specifications shall be followed and are not waived or superseded in any way by the Shop Drawing review.

1.06 RECORD DRAWINGS:

A. One complete set of electrical drawings shall be reserved for as-built drawings. Any approved deviation from the contract drawings shall be recorded on these drawings. Drawings shall be checked monthly for completeness.

B. Completed as-built drawings shall be presented to the Engineer prior to final inspection.

1.07 MAINTENANCE AND OPERATING INSTRUCTIONS:

A. Provide at the time of final inspection three sets of maintenance and operating instruction for:

1. Lighting and Power Panelboards
2. Fuses
3. Wiring Devices
4. Lighting Fixtures
5. Disconnect Switches
6. Generator/ATS

7. Surge Protection System
8. Dry-type Transformers

B. Furnish a qualified and accredited factory trained technician to train personnel designated by the Owner in the proper operation and maintenance of specialized equipment.

C. The issuing of operating instructions shall include the submission of the name, address, and telephone number of the manufacturer's representative and service company for each item of equipment so that service and spare parts can be readily obtained.

1.08 CODES AND PERMITS:

A. All electrical work shall meet or exceed the latest requirements of the following codes and/or other authorities exercising jurisdiction over the electrical construction work and the project.

1. The National Electrical Code (NFPA 70) - 2023 Edition
2. The National Electrical Safety Code (ANSI C-2)
3. The Life Safety Code (NFPA 101) - Current Edition
4. The International Building Code - Current Edition, with Georgia Amendments.
5. Regulations of the local utility company with respect to metering and service entrance.
6. Municipal and State ordinances governing electrical work.

B. All required permits and inspection certificates shall be obtained, and made available at the completion of the work. Permits, inspections, and certification fees shall be paid for as a part of the electrical work.

1.09 DEVIATIONS:

A. No deviations from the plans and specifications shall be made without the full knowledge and consent of the Engineer or his authorized representative.

B. Should the Contractor find at any time during progress of the work that, in his judgment, existing conditions make desirable a modification in requirements covering any particular item or items, he shall report such items promptly to the Engineer for his decision and instruction.

1.10 COOPERATION:

A. This Contractor shall schedule his work and in every way possible cooperate with all other Contractors on the job to avoid delays, interferences, and unnecessary work. He shall notify them of all openings, hangers, excavations, etc., so that proper provisions shall be made for his work. This shall not relieve him of the cost of cutting, when such is required.

B. This Contractor shall do all cutting and excavating necessary for the complete installation of his work, but he shall not cut the work of any other Contractor without first consulting the Engineer. He shall repair any work damaged by him or his workmen, employing the services of the Contractor whose work is damaged. Saw cut existing slab as required for routing conduits and floor boxes noted to be installed in existing floors. Restore to original finish.

C. This Contractor shall by all means coordinate the location of ceiling lighting fixtures, both recessed and surface mounted, with the Ceiling Contractor so that proper hangers and supports shall be provided.

D. Any conflict between electrical and other trades shall be reported before construction starts. No extra charges will be approved for work resulting from failure to coordinate with other trades.

1.11 INSTALLATION:

A. Raceways, fixtures, devices, and other electrical equipment shall be installed in a neat and workmanlike manner and in accordance with recognized good practice for a first class installation.

B. The Engineer or his representative shall have the authority to reject any workmanship not complying with the contract documents.

C. The Electrical Contractor shall personally or through an authorized licensed and competent electrician, constantly supervise the work from beginning to complete and final inspection.

D. Electrical equipment shall be installed in accordance with manufacturer's recommendations.

E. Locations of proposed raceway, riser, location of structural elements, location and size of chases method and type of construction of floors, walls, partitions, etc., shall be verified before construction starts.

F. Consult owner and utility companies for underground lines before any underground work is started. Contractors shall be responsible for any damage.

G. All empty conduits shall have a pull string installed. All flush recessed boxes shall have black plates installed.

1.12 EXCAVATION, TRENCHING AND BACKFILLING:

A. General. The Contractor shall perform all excavation to install conduit structures and equipment specified in this Division of the Specifications. During excavation, materials for backfilling shall be piled back from the banks of the trench to avoid over-loading and to prevent slides and cave-ins. All excavated materials not to be used for backfill shall be removed and disposed of by the Contractor. Grading shall be done to prevent surface water from flowing into trenches and other excavations and water accumulating therein shall be removed by pumping. All excavations shall be made by open cut. No tunneling shall be done. All requirements of OSHA shall be complied with.

B. Trench Excavation. The bottom of the trenches shall be graded to provide uniform bearing and support for each section of the conduit on undisturbed soil at every point along its entire length. Over depths shall be backfilled with loose, granular, moist earth, tamped. Removed unstable soil that is not capable of supporting the conduit and replace with specified material.

C. Backfilling. The trenches shall not be backfilled until it is reviewed by the Engineer or his representative. The trenches shall be backfilled with the excavated materials approved for backfilling, consisting of earth, loam, sandy clay, and gravel or soft shale, free from large clods of earth or stones, deposited in 6" layers and tamped until the conduit has a cover of not less than the adjacent existing ground but not greater than 2" above existing ground. The backfilling shall be carried on simultaneously on both sides of the trench so that conduit is not displaced. The compaction of the filled trench shall be at least equal to that of the

surrounding undisturbed material, except that trenches occurring under paved areas or in areas to be filled shall be backfilled in 6" maximum layers and each layer compacted to 95% maximum density. Settling the backfill with water will not be permitted. Any trenches not meeting compaction requirements or where settlement occurs shall have backfill removed down to the top of the conduit then backfill with approved materials as specified hereinbefore.

D. Positively no tree roots are to be damaged, hand dig where required. Damaged trees or shrubbery shall be replaced in kind and must be approved by Engineer.

1.13 MATERIALS:

A. Materials specified by manufacturer's name shall be used unless approval of other manufacturers are listed in addenda to these specifications. Request for prior approval shall be submitted by mail only. Facsimile will not be acceptable.

B. Drawings indicating proposed layout of space, all equipment to be installed therein and clearance between equipment shall be submitted, where substitution of materials alter space requirements on the drawings.

C. Material Standards: All materials shall be new and shall conform to the standards where such have been established for the particular material in question. Publications and Standards of the organization listed below are applicable to materials specified herein.

1. American Society for Testing and Materials (ASTM)
2. Underwriter's Laboratories, Inc. (UL)
3. National Electrical Manufacturer Association (NEMA)
4. Insulated Cable Engineers Association (ICEA)
5. Institute of Electrical and Electronic Engineers (IEEE)
6. National Fire Protection Association (NFPA)
7. American National Standards Institute (ANSI)

D. Material of the same type shall be the product of one manufacturer.

E. Materials not readily available from local sources shall be ordered immediately upon approval.

F. The Engineer shall have authority to reject any materials, or equipment, not complying with these specifications and have the Contractor replace materials so rejected immediately upon notification of rejection.

G. Any material or equipment so rejected shall be removed from the job within 24 hours of such rejection, otherwise the Engineer may have same removed at the Contractor's expense.

1.14 EQUIPMENT CONNECTIONS:

A. All equipment requiring electrical power connections shall be connected under this Division of these specifications.

B. Where electrical connections to equipment require specific locations, such locations shall be obtained from shop drawings.

C. Drawings for location of conduit stub-up boxes mounted in wall or floor to serve specific equipment, shall not be scaled.

D. Electrical circuits to equipment furnished under other sections of these specifications are based on design loads. If actual equipment furnished has loads other than design loads electrical circuits and protective devices shall be revised to be compatible with equipment furnished at no additional cost to the Owner. Any revisions must have prior approval by the Engineer. **Before submitting shop drawings, Electrical Sub-Contractor shall along with the Plant Equipment providers/contractors, Mechanical and Plumbing Sub-Contractor review voltage and load requirements for mechanical and plumbing equipment to determine the compatibility between what is being furnished and what is shown in the contract drawings. The Electrical Sub-Contractor shall along with his submittals submit a statement that he has reviewed all shop drawings including review with the Plant Equipment providers/contractors, Mechanical and Plumbing Sub-Contractor**.

E. Where equipment is indicated to be served thru conduit stub-up, conduit shall be stubbed up not less than four inches above floor where transition shall be made to sealtite flexible conduit for connection to equipment.

F. The Contractor's attention is invited to other Divisions of these specifications, where equipment requiring electrical service or electrically related work is specified to become fully aware of the scope of work required for electrical service or related work.

G. Where electricity utilizing equipment is supplied separate from the electrical work, and is energized, controlled or otherwise made operative by electrical work, the testing to provide the proper functional performance of such wiring systems shall be conducted by the trade responsible for the equipment. The electrical work shall, however, include cooperation in such testing and the making available of any necessary testing or adjustments to the electrical equipment.

H. Heating, air conditioning, and ventilating equipment is specified to be furnished and installed under other sections of these specifications. The controls, likewise are specified to be furnished thereunder. All necessary wiring, wiring troughs and circuit breakers for power for this equipment shall be furnished and installed under this section of the specifications, in accordance with the plans and/or diagrams furnished with the equipment, or shown on these plans. Starters furnished by the Mechanical Contractor shall be installed under this Division of the specifications. Power wiring to auxiliary equipment on a piece of equipment remote from its main terminal box and interlocking of apparatus shall be accomplished under Heating Ventilating Equipment section of the specifications. Conduit and outlets for control wiring shall be furnished and installed under Mechanical Division of these specifications. Control conductors for mechanical equipment shall not be installed in same conduit with power conductors.

I. Contractor is to note that location of disconnect switches shown are schematic in nature. Exact location of disconnect switch and mounting height shall be coordinated with field conditions and equipment shop drawings. Locate disconnect as required to maintain clearances required by National Electrical Code.

J. Contractor shall provide a rooftop mounted, GFCI receptacle with weatherproof cover within 20' of a rooftop mounted HVAC unit. Serve from closest receptacle circuit with ½"C., 3#12's. See mechanical plan for unit locations.

1.15 PRODUCT DELIVERY, STORAGE, HANDLING, & PROTECTION

A. Inspect materials upon arrival at Project and verify conformance to Contract Documents. Prevent unloading of unsatisfactory material.

Handle materials in accordance with manufacturer's applicable standards and suppliers recommendations, and in a manner to prevent damage to materials. Store packaged materials in original undamaged condition with manufacturer's labels and seals intact. Containers which are broken, opened, damaged, or watermarked are unacceptable and shall be removed from the premises.

B. All material, except items specifically designed to be installed outdoors such as pad mounted transformers or stand-by generators, shall be stored in an enclosed, dry building or trailer. Areas for general storage shall be provided by the Contractor. Provide temperature and/or humidity control where applicable. No material for interior installation, including conductors, shall be stored other than in an enclosed weather tight structure. Equipment stored other than as specified above shall be removed from the premises.

C. Equipment and materials shall not be installed until such time as the environmental conditions of the job site are suitable to protect the equipment or materials. Conditions shall be those for which the equipment or materials are designed to be installed. Equipment and materials shall be protected from water, direct sunlight, cold or heat. Equipment or materials damaged or which are subjected to these elements are unacceptable and shall be removed from the premises and replaced.

1.16 CLEANING AND PAINTING

A. Remove oil, dirt, grease and foreign materials from all raceways, fittings, boxes, panelboard trims and cabinets to provide a clean surface for painting. Touch-up scratched or marred surfaces of lighting fixtures, panelboard and cabinet trims, motor control center, switchboard or equipment enclosures with paint furnished by the equipment manufacturers specifically for that purpose.

B. Do not paint trim covers for flush mounted panelboards, telephone cabinets, pull boxes, junction boxes and control cabinet unless required by the Engineer. Remove trim covers before painting. Under no conditions shall locks, latches or exposed trim clamps be painted.

C. Unless indicated on the drawings or specified herein to the contrary, all painting shall be done under the PAINTING Section of these Specifications.

D. Where plywood backboards are used to mount equipment provided under Division 26, paint backboards with two coats of light grey semi-gloss paint. Plywood shall be 3/4" fire rated plywood. Paint shall be fire retardant paint.

1.17 GUARANTEE:

A. All systems and component parts shall be guaranteed for one year from the date of final acceptance of the complete project. Defects found during this guaranteed period shall be promptly corrected at no additional cost to the Owner.

1.18 SERVICE:

A. The electrical service and telephone service for this project has been coordinated between the Engineer and the Utility Company. However, before installing service conduit (underground or mast), Contractor shall contact Utility Company and verify voltage, location and type of service. Prior to rough-in, coordinate an on-site meeting with each Utility Company to review exact requirements. Submit letter of coordination to Engineer for review.

END OF SECTION

SECTION 260003
ELECTRICAL SUBMITTAL PROCEDURES

PART 1 - GENERAL

1.1 SUMMARY

A. Section includes requirements for the preparation of Electrical Division 26 Shop Drawings, Product Data, Samples, and other submittals.

PART 2 - PRODUCTS

2.1 SUBMITTAL PROCEDURES

A. General Submittal Procedure Requirements: Prepare and submit submittals required by individual Specification Sections. Types of submittals are indicated in individual Specification Sections.

B. All submittals shall be submitted in electronic format.

C. Electronic Submittals: Identify and incorporate information in each electronic submittal file as follows:

1. Assemble complete submittal package into indexed files incorporating submittal requirements of each single Specification Section and transmittal form with links enabling navigation to each item.
2. Name file with submittal number or other unique identifier, including revision identifier.

    a. File name shall use project identifier and Specification Section number followed by a decimal point and then a sequential number (e.g., LNHS-061000.01). Resubmittals shall include an alphabetic suffix after another decimal point (e.g., LNHS-061000.01.A).

3. Transmittal Form for Electronic Submittals: Use software-generated form from electronic project management software acceptable to Owner, containing the following information for EACH SECTION:

    a. Project name.
    b. Date.

c. Name and address of Engineer.
d. Name of Construction Manager/General Contractor.
e. Name of Electrical Contractor.
f. Name of firm or entity that prepared submittal.
g. Names of subcontractor, manufacturer, and supplier.
h. Specification Section number and title.
i. Indication of full or partial submittal.

D. Options: Identify options requiring selection by Engineer.

E. Deviations and Additional Information: On an attached separate sheet, prepared on Contractor's letterhead, record relevant information, requests for data, revisions other than those requested by Engineer on previous submittals, and deviations from requirements in the Contract Documents, including minor variations and limitations. Include same identification information as related submittal.

F. Resubmittals: Make resubmittals in same form and number of copies as initial submittal.

1. Note date and content of previous submittal.
2. Note date and content of revision in label or title block and clearly indicate extent of revision.
3. Resubmit submittals until they are marked with approval notation from Engineer's action stamp.

G. HVAC/Plumbing/Plant Equipment/Electrical Equipment connection coordination letter as noted below: Before submitting shop drawings, Electrical Sub-Contractor shall along with the Mechanical and Plumbing Sub-Contractor review unit locations, unit quantities, unit voltage, phase, MCA and MOCP requirements for mechanical and plumbing equipment to determine the compatibility between what the Mechanical and Plumbing Sub-Contractor is providing and installing versus what is shown in the contract drawings. The Electrical Sub-Contractor shall along with his gear submittals submit a statement that he has reviewed all equipment shop drawings with the Mechanical and Plumbing Sub-Contractors. Any discrepancy between such shall be listed for Engineer review and corrective action. Do <u>not</u> submit the electrical gear without this coordination letter. Contractor is to note that electrical gear submitted without this coordination letter shall <u>not</u> be reviewed, <u>nor</u> returned until Engineer receives such coordination letter.

2.2 SUBMITTAL DATA

A. Product Data: Collect information into a single submittal for each element of construction and type of product or equipment.
   1. Mark each copy of each submittal to show which products and options are applicable.
   2. Include the following information, as applicable:

      a. Manufacturer's catalog cuts.
      b. Manufacturer's product specifications.
      c. Standard color charts.
      d. Statement of compliance with specified referenced standards.
      e. Testing by recognized testing agency.
      f. Application of testing agency labels and seals.
      g. Notation of coordination requirements.
      h. Availability and delivery time information.

   3. For equipment, include the following in addition to the above, as applicable:

      a. Wiring diagrams showing factory-installed wiring.
      b. Printed performance curves.
      c. Operational range diagrams.
      d. Clearances required to other construction, if not indicated on accompanying Shop Drawings.

   4. Submit Product Data before or concurrent with Samples.

B. Shop Drawings: Prepare Project-specific information, drawn accurately to scale. Do not base Shop Drawings on reproductions of the Contract Documents or standard printed data.

   1. Preparation: Fully illustrate requirements in the Contract Documents. Include the following information, as applicable:

      a. Identification of products.
      b. Schedules.
      c. Compliance with specified standards.
      d. Notation of coordination requirements.
      e. Notation of dimensions established by field measurement.
      f. Relationship and attachment to adjoining construction clearly indicated.
      g. Seal and signature of professional engineer if specified.

2. Sheet Size: Except for templates, patterns, and similar full-size drawings, submit Shop Drawings on sheets at least 8-1/2 by 11 inches, but no larger than 30 by 42 inches.

C. Qualification Data: Prepare written information that demonstrates capabilities and experience of firm or person. Include lists of completed projects with project names and addresses, contact information of engineers and owners, and other information specified.

D. Installer Certificates: Submit written statements on manufacturer's letterhead certifying that Installer complies with requirements in the Contract Documents and, where required, is authorized by manufacturer for this specific Project.

PART 3 - EXECUTION

3.1 CONTRACTOR'S REVIEW

A. Review each submittal and check for coordination with other Work of the Contract and for compliance with the Contract Documents. Note corrections and field dimensions. Mark with approval stamp before submitting to Engineer.

B. Approval Stamp: Stamp each submittal with a uniform, approval stamp. Include Project name and location, submittal number, Specification Section title and number, name of reviewer, date of Contractor's approval, and statement certifying that submittal has been reviewed, checked, and approved for compliance with the Contract Documents.

3.2 ENGINEER’S ACTION

A. Submittals: Engineer will review each submittal, make marks to indicate corrections or revisions required, and return it.

B. Incomplete submittals are unacceptable, will be considered nonresponsive, and will be returned for resubmittal without review.

C. Submittals not required by the Contract Documents may be returned by the Engineer without action.

END OF SECTION

SECTION 260010
LIGHTING AND POWER PANELBOARDS

1.01 SUBMITTALS

A. Complete panelboard shop drawings shall be submitted, listing as a minimum the following items:

1. Voltage rating.
2. Bus assembly rating.
3. Main breaker rating by capacity, number of poles and interrupting rating in RMS symmetrical amperes.
4. Surface or flush mounting.
5. Listing of branch breakers by capacity number of poles and interrupting rating in RMS symmetrical amperes.
6. Top or bottom feed.
7. A schedule similar to that shown on the drawings, depicting branch breaker arrangement and breaker sizes and giving full explanation for any difference between the two.
8. Coordinate lug sizes as required for feeders shown on drawings.

B. Contractor shall submit ¼" layouts of all electrical rooms delineating placement of equipment of minimum required clearances specified in National Electrical Code.

1.02 MANUFACTURERS

A. For the purpose of selecting quality and types of panels, equipment as manufactured by Square "D" Company has been specified. Following manufacturers meeting these specifications are acceptable.

1. G. E.
2. Siemens
3. Eaton
4. Square D

1.03 EQUIPMENT

A. Furnish and install circuit breaker lighting and power panelboards as indicated in the panelboard schedule and where shown on the plans. Panelboards shall be of the dead-front safety type, equipped with

thermal magnetic molded case circuit breakers with frame and trip rating as shown in the schedule.

B. Circuit breakers shall be HACR rated, quick-make, quick-break, thermal-magnetic, trip-indicating, and have common trip on all multi-pole breakers. Trip indication shall be clearly shown by the breaker handle taking position between ON and OFF, when the breaker is tripped. Branch circuit breakers feeding convenience outlets shall have sensitive instantaneous trip setting of not more than 10 times the trip rating of the breakers. Connection to bus in all panels shall be bolted. All breakers shall be 20 ampere trip, unless otherwise shown. All breakers shall be minimum for 120/240 volts (10,000) A.I.C. sym. unless otherwise noted.

C. Bus bar connections to the branch circuit breakers shall be the distributed phase type. Three-phase, four-wire bussing shall be such that any three adjacent single-pole breakers are individually connected to each of the three different phases in such a manner that two or three-pole breakers can be installed at any location. **All current-carrying parts of the bus assembly shall be copper. Main ratings shall be as shown in the panelboard schedule on the drawings.**

D. Panel front shall be provided with a continuous piano hinge on one side.

E. A steel circuit directory frame permanently attached (spot welded) at factory (not glued), and card with a clear plastic covering shall be provided on the inside of the door. The directory card shall provide a space at least 1/4" high x 3" long for each circuit.

F. All panels shall be equipped with a copper equipment grounding bar. The bar shall have lugs of sufficient size to handle all grounding conductors.

G. Sub-feed circuit breakers are not permitted in panels unless specifically called for.

H. Provide mounting hardware for all spaces shown on panelboard schedule.

I. Panelboard circuit numbering shall be such that starting at the top, odd numbering shall be used in sequence down the left hand side and even numbers down the right hand side.

J. Except where otherwise indicated on the drawings or required to avoid conflicts, mount the panelboards so the tops of the cabinets will be 6 feet above the finished floors. For panelboards which are too high, mount them so the bottoms of the cabinets will be not less than 6 inches above the finished floors.

K. Locate the cabinets so that present and future conduits can be connected to them conveniently. Coordinate the dimensions of the cabinets with the dimensions of the spaces designated for installation prior to fabrication of the cabinets. Cabinet shall be minimum 20" wide.

L. Wiring in panelboards shall be neatly grouped and secured with ty-wraps.

M. Electrical panels shall not be used as wireways or junction boxes for control conductors.

N. Where spaces are called for in a panel, all mounting hardware shall be provided for the frame size indicated.

O. Splices in panelboards are not permitted.

END OF SECTION

SECTION 260015
FUSES

1.01 SUBMITTALS

A. Shop drawings shall be submitted and shall consist of manufacturer's published literature and technical data sufficient for the engineer to determine whether system function will be adversely affected, whether proposed fuses meet this specification, and whether they are equal in quality.

1.02 MANUFACTURERS

A. Acceptable manufacturers are:
   1. Littelfuse
   2. Cefco
   3. Gould - Shawmut

1.03 EQUIPMENT/MATERIAL

A. All fuses rated 600 volts or less and used for main, feeder, or branch circuit protection with 200,000 ampere interrupting rating and shall be so labeled. Fuse classes and sizes indicated on the drawings have been selected to provide a fully coordinated selective protection system. To maintain this design, all fuses provided shall be furnished by the same manufacturer. Should equipment provided require a different U.L. Class or fuse size, the engineer shall be furnished with sufficient data to ascertain that system function will not be adversely affected.

B. <u>Current-Limiting Fuses 600 Amperes or Less</u>
All fuses 600 amperes and below shall be true dual-element time delay fuses with separate spring-loaded thermal overload elements in all ampere ratings. All ampere ratings shall be designed to open at 400 degrees Fahrenheit or less when subjected to a non-load oven test. To eliminate induction heating, all fuse ferrules and end caps shall be non-ferrous and shall be bronze or another alloy not subject to stress cracking.

C. Spare Fuses

At the time of final acceptance, the contractor shall furnish the owner's representative, not less than three (3) spare fuses of each size and type installed.

END OF SECTION

SECTION 260020
RACEWAYS

1.01 SUBMITTALS

A. Submit manufacturer's literature for each type of conduit or tubing and fittings used in the project.

1.02 MANUFACTURERS

A. Acceptable manufacturers of rigid steel and electrical metallic tubing conduit are:
   1. Allied Tube and Conduit Co. (Kwik-Fit)
   2. Wheatland Tube Co.
   3. Triangle
   4. L.T.V.
   5. American Brass
   6. E.T.P.
   7. Robroy
   8. PYTCO
   9. RYMCO
   10. Galvite
   11. Western Tube

B. Acceptable manufacturer's of polyvinyl chloride (PVC) conduit are:
   1. Certainteed
   2. Georgia Pipe
   3. Carlon
   4. Can-Tex
   5. Queen City

C. Acceptable manufacturer’s of conduit fittings, bushings, and locknuts are:
   1. O-Z/Gedney
   2. Thomas and Belts
   3. Raco

1.03 MATERIALS

A. All metallic conduit and electric metallic tubing shall be steel, of standard pipe dimensions, smooth inside and out, and shall be galvanized, unless located in a highly corrosive area. Where the word "conduit" is used

hereinafter it shall mean either rigid steel conduit, electric metallic tubing, flexible steel conduit, liquid tight flexible steel conduit or schedule 40 plastic conduit. Intermediate grade conduit is not acceptable.

B. Stainless steel conduits shall be used in highly corrosive areas where the conduit is subject to damage.

B. Galvanized rigid steel conduit shall be used in all areas where it will be exposed to physical damage, unless located in a highly corrosive area. Schedule 40 plastic conduit shall be used underground and in slab-on-grade. In no case shall plastic conduit be exposed; switch to rigid steel conduit when turning up exposed. All other conduit, unless otherwise specified or called for on the plans, may be galvanized electric metallic tubing. Any exposed conduit on exterior of the building shall be galvanized rigid steel only, unless located in a highly corrosive area.

C. Plastic conduit shall be made from virgin polyvinyl chloride C-300 compound. Conduit and fittings shall carry a UL label. Fitting and cement shall be produced by the same manufacturer as the conduit to assure system integrity.

D. All conduit shall be concealed in building construction except as noted or shown otherwise. In areas with no finished ceiling and where conduit is run exposed all runs down to switches, receptacles, etc. shall when possible be concealed in wall. It is the intent of these specifications that all conduit will be concealed whenever possible.

E. EMT fittings shall be compression and made of steel for sizes two inches or smaller, steel set screw type fittings may be used on sizes 2 1/2" or larger. Connectors and couplings shall be rain tight and shall have a nylon insulated throat. All fittings shall be "UL" approved. EMT conduit (in sizes 2 ½” through 4”) provided with integral steel compression or set screw coupling on one (1) end of the conduit is acceptable. Die cast, and indenter type fittings are not acceptable. Fittings for flexible steel conduits and liquid tight flexible conduit shall be steel and have nylon insulated throat.

F. Rigid steel conduit, stainless steel conduit, and EMT shall be not less than ½ inch trade size, schedule 40 plastic conduit shall not be less than 3/4" trade size and not less than required by the NEC or indicated. Conduit runs with more than 5 #12 conductors shall not be less than 3/4".

G. Conduit and EMT systems indicated on the drawings for communication and signaling systems are for typical systems. Install conduit and EMT systems for the system being installed.

H. Connect individual recessed lighting fixtures to the conduit or EMT system with "maximum 6'-0" flexible, galvanized steel conduit. Use flexible galvanized, steel metal conduit for final connection to all rotating equipment and transformers. The flexible conduits shall be long enough to permit the full range of required movements without strain and to prevent the transmission of vibration. Do not utilize flexible conduit to loop between fixtures and devices.

I. Galvanized rigid steel conduit couplings and connections:
   1. Install standard, conduit-threaded fittings.
   2. Ream the ends of conduits after cutting and threading them.
   3. For connection to sheet metal boxes, cabinets and other sheet metal enclosures, install locknuts on the inside and outside of the enclosure for each connection. See Section 16110 of these specifications.

J. EMT couplings and connectors:
   1. Ream the ends of EMT after cutting them.
   2. Install the following threadless type fittings:

      a. Connectors: steel compression type with insulated throat or steel tap-on type with insulated throat.
      b. Couplings: steel compression or tap-on type.

K. Installation of plastic conduit:
   1. Shall be installed in complete accordance with manufacturer's recommendations.
   2. Shall be a minimum of 2'-0" below finished grade when not covered by concrete.
   3. Shall have properly sized bond wire installed with all circuits.
   4. Bends and turns shall be kept to a bare minimum.
   5. Extreme care shall be taken to avoid crushing or cracking conduit. "DO NOT" run vehicles over exposed conduit under any conditions.
   6. All conduit and fittings shall be solvent welded.
   7. Plastic conduit maybe turned up in masonry walls only. PVC conduit shall be allowed to be routed concealed in masonry walls to a maximum height of 48" A.F.F.

8. Do not install conduit in slab. All conduit shall be installed a minimum of 6" below slab. Conduits shall not be bunched together. Maintain 1" clearance between conduits.
9. Plastic conduit shall not be bent with a propane torch or open flame. Contractor shall utilize a heat gun, heat blanket, or hot box. Plastic conduit bent with such shall not be scorched or marred.

L. Insulated bushings:
1. Install nylon insulated bushings on the end of all rigid conduit.
2. The insulating material shall be designed for rugged, long service.
3. Bushings which consist of only insulating material will not be accepted.
4. Fittings which incorporate insulated bushings will be considered for approval in lieu of fittings with separate bushings.

M. All couplings and connections in location where water or other liquid or vapor might contact the conduit and EMT shall also be watertight.

N. Close empty conduit and EMT as complete runs before pulling in the cables and wires.

O. Install exposed conduit and EMT parallel to or at right angles with the lines of the building. Locate them so they will not obstruct headroom or walkways or cause tripping.

P. Avoid bends or offsets where practicable:
1. Do not install more bends, offsets or equivalent in any conduit or EMT run than permitted by the NEC.
2. Make bends with standard conduit bending machines.
3. Conduit hickeys may be used for making slight offsets and for straightening conduits stubbed out of concrete.
4. Conduit or EMT bent with a pipe tee or vise will not be accepted.
5. Do not install crushed or deformed conduits or EMT.

Q. Install conduit or EMT clamps:
1. At intervals as required by the NEC.
2. Above suspended ceilings, metal supports may be installed as permitted by the NEC, except that conduit cannot be supported or secured to the T-bar grid or from the wire supporting the T-bar grid.

3. Trapeze, split ring, band or clevis hanger may be installed as permitted by the NEC. Trapeze hangers shall be structural metal channels, angle irons or preformed metal channel shapes with the conduit and EMT runs held on specific center by U bolts, clips or clamps. Do not support conduit from ceiling suspension wire or from other conduit.
4. Chain, wire or perforated strap supports will not be acceptable. Nor are they acceptable as a means of securing the conduit.
5. Fasten the clamps and other supports as follows:

    a. For new masonry or concrete structures, install threaded metal inserts prior to pouring the concrete.
    b. For existing solid masonry or reinforced concrete structures:

        1. Install expansion anchors and bolts or approved power-set fasteners.
        2. Expansion anchors and bolts shall be not less that 1/4 inch diameter and shall extend not less than 3 inches into the concrete or masonry.
        3. Power-set fasteners shall be not less than 1/4-inch diameter and shall extend not less than 1-1/4-inch into the concrete.

    c. For hollow masonry install toggle bolts. Bolts supported only by plaster will not be accepted.
    d. For metal structures install machine screws.
    e. Attachments to wood plug, rawl plug, soft metal insert or wood blocking will not be permitted.

R. For vertical runs of conduit of EMT:
1. Install supports for conduit, EMT, cables and wires at intervals as required by the NEC and as indicated on the drawings.
2. Conduit and EMT supports shall be supported by framing for the floors.

S. Conduits and EMT shall be kept 6" away from parallel runs of steam or hot water pipes.

T. Clogged raceways shall be entirely free of obstructions or shall be replaced.

U. Rigid steel conduit installed underground and in concrete shall be wrapped with Scotchwrap #50 corrosion protection tape.

V. All empty conduits shall have nylon pull cord installed to provide for installation of cables, conductors or wiring. All empty conduits stubbed out below grade shall have be capped and provided with a concrete marker. All spare conduits stubbed up through slab shall have a cap installed to prevent debris from entering conduit.

W. Do not combine conduit homeruns. Each homerun shall be separately routed directly to panel unless specifically noted otherwise.

X. Install service conduit (TV, electrical, and telephone) as follows:

1. All underground entrances shall have metallic sleeves through building foundation walls and extend to undisturbed ground to avoid shear, and shall be full weight, threaded hot-dipped galvanized rigid steel conduit.
2. All 90 degree bends to be rigid metallic conduit, with a radius of not less than 10 times the diameter of the conduit.
3. Maintain a minimum cover of 24 inches below final grade for conduits.

Y. Telephone conduits:

1. Where telephone conduit runs are longer than 100'-0" or have more than two 90° bends (or equivalent) or have a reverse bend, pull boxes shall be provided.

Z. Do not install conduit in cavity between concrete block and brick. Conduit shall not be stubbed up into this cavity or routed horizontally in cavity.

AA. All underground conduit installed outside of the building shall have yellow, 4” wide, warning tape, reading “CAUTION-ELECTRICAL LINES BELOW” installed in trench above conduit. Install warning tape 12” below grade.

BB. For exterior locations provide 304 stainless steel channel, conduit clamps, threaded rod and hardware of equivalent dimensions identified for exterior locations. For interior locations all parts and hardware shall be zinc-coated or have equivalent corrosion protection.

END OF SECTION

SECTION 260030
LOW-VOLTAGE ELECTRICAL POWER CONDUCTORS AND CABLES

PART 1 - GENERAL

1.1 SUMMARY

A. Section Includes:

1. Copper building wire rated 600 V or less.
2. Connectors, splices, and terminations rated 600 V and less.

1.2 ACTION SUBMITTALS

A. Product Data: For each type of product.

B. Field quality-control reports.

PART 2 - PRODUCTS

2.1 Manufacturers: Subject to compliance with requirements, provide products by one of the following:

1. Alpha Wire Company.
2. Cerro Wire LLC.
3. Encore Wire Corporation.
4. General Cable; General Cable Corporation.
5. Senator Wire & Cable Company.
6. Southwire Company.

2.2 COPPER BUILDING WIRE

A. Description: Flexible, insulated and uninsulated, drawn copper current-carrying conductor with an overall insulation layer or jacket, or both, rated 600 V or less.

B. Standards:

1. Listed and labeled as defined in NFPA 70, by a qualified testing agency, and marked for intended location and use.
2. RoHS compliant.

3. Conductor and Cable Marking: Comply with wire and cable marking according to UL's "Wire and Cable Marking and Application Guide."

C. Conductors: Copper, complying with ASTM B 3 for bare annealed copper and with ASTM B 8 for stranded conductors.

D. Conductor Insulation:

1. Type THHN and Type THWN-2: Comply with UL 83.
2. Type THW and Type THW-2: Comply with NEMA WC-70/ICEA S-95-658 and UL 83.
3. Type XHHW-2: Comply with UL 44.

2.3 CONNECTORS AND SPLICES

A. Description: Factory-fabricated connectors, splices, and lugs of size, ampacity rating, material, type, and class for application and service indicated; listed and labeled as defined in NFPA 70, by a qualified testing agency, and marked for intended location and use.

B. Lugs: One piece, seamless, designed to terminate conductors specified in this Section.

1. Material: Copper.
2. Type: Two hole with long barrels.
3. Termination: Compression.

PART 3 - EXECUTION

3.1 CONDUCTOR MATERIAL APPLICATIONS

A. Feeders: Type THHN/THWN-2, single conductors in raceway.

B. Branch Circuits: Type THHN/THWN-2, single conductors in raceway.

3.2 INSTALLATION OF CONDUCTORS AND CABLES

A. Conceal cables in finished walls, ceilings, and floors unless otherwise indicated.

B. Complete raceway installation between conductor and cable termination points according to Section 26 05 33 "Raceways and Boxes for Electrical Systems" prior to pulling conductors and cables.

C. Use manufacturer-approved pulling compound or lubricant where necessary; compound used must not deteriorate conductor or insulation. Do not exceed manufacturer's recommended maximum pulling tensions and sidewall pressure values.

D. Use pulling means, including fish tape, cable, rope, and basket-weave wire/cable grips, that will not damage cables or raceway.

E. Install exposed cables parallel and perpendicular to surfaces of exposed structural members, and follow surface contours where possible.

F. Support cables according to Section 26 05 29 "Hangers and Supports for Electrical Systems."

3.3 CONNECTIONS

A. Tighten electrical connectors and terminals according to manufacturer's published torque-tightening values. If manufacturer's torque values are not indicated, use those specified in UL 486A-486B.

B. Make splices, terminations, and taps that are compatible with conductor material and that possess equivalent or better mechanical strength and insulation ratings than unspliced conductors.

3.4 IDENTIFICATION

A. Identify and color-code conductors and cables according to Section 26 05 53 "Identification for Electrical Systems."

B. Identify each spare conductor at each end with identity number and location of other end of conductor, and identify as spare conductor.

3.5 SLEEVE AND SLEEVE-SEAL INSTALLATION FOR ELECTRICAL PENETRATIONS

A. Install sleeves and sleeve seals at penetrations of exterior floor and wall assemblies. Comply with requirements in Section 26 05 44 "Sleeves and Sleeve Seals for Electrical Raceways and Cabling."

3.6 FIRESTOPPING

A. Apply firestopping to electrical penetrations of fire-rated floor and wall assemblies to restore original fire-resistance rating of assembly according to Section 07 84 13 "Penetration Firestopping."

3.7 FIELD QUALITY CONTROL

A. Perform the following tests and inspections:

1. After installing conductors and cables and before electrical circuitry has been energized, test service entrance and feeder conductors and conductors feeding the following critical equipment and services for compliance with requirements.
2. Perform each of the following visual and electrical tests:

    a. Inspect exposed sections of conductor and cable for physical damage and correct connection according to the single-line diagram.
    b. Test bolted connections for high resistance using one of the following:

        1) A low-resistance ohmmeter.
        2) Calibrated torque wrench.
        3) Thermographic survey.

    c. Inspect compression applied connectors for correct cable match and indentation.
    d. Inspect for correct identification.
    e. Inspect cable jacket and condition.
    f. Insulation-resistance test on each conductor with respect to ground and adjacent conductors. Apply a potential of 500-V dc for 300-V rated cable and 1000-V dc for 600-V rated cable for a one-minute duration.
    g. Continuity test on each conductor and cable.
    h. Uniform resistance of parallel conductors.

B. Test and Inspection Reports: Prepare a written report to record the following:

1. Procedures used.
2. Results that comply with requirements.
3. Results that do not comply with requirements and corrective action taken to achieve compliance with requirements.

C. Cables will be considered defective if they do not pass tests and inspections.

END OF SECTION

SECTION 260040
OUTLETS

1.01 SUBMITTALS

A. Shop drawings shall be submitted and shall consist of manufacturer's published literature.

1.02 MANUFACTURERS

A. Acceptable manufacturers are:

1. Raco
2. Steel City
3. Appleton
4. Hubbell

1.03 MATERIALS

A. Boxes shall be galvanized pressed sheet steel for all concealed work, unless otherwise specified or indicated on the drawings.

B. Where conduit runs are exposed, outlet shall be of the cast metal type, unless located in a highly corrosive area.

C. For concealed work each box shall be provided with a square cornered plaster ring.

D. Each surface lighting fixture, receptacle and switch shall be provided with flush mounted outlet box. All outlets installed in panels and other architectural features shall be centered. The location of any outlet may be moved as much as 10'-0" by the Engineer before the outlet is placed without incurring any extra cost. All dimensions refer to the finished floor line. Outlet boxes shall be pressed sheet steel and shall be galvanized for all concealed work. Where conduit runs are exposed outlets shall be of the cast metal type, unless located in a highly corrosive area.

E. Boxes shall be for the service and the type of outlet and shall not be less than 4" square and 1-1/2" deep except where otherwise specified. Boxes installed in walls shall be provided with a square cornered 1-1/2" plaster ring installed flush with surface of wall. Coordinate depth of plaster ring

required for particular wall construction. Each outlet box above ceiling shall be supported from a structural member of the building either directly or by using a substantial and approved metal support. Conduit is not an approved means of support. Boxes installed in wall shall be supported either directly to a stud or between studs utilizing an approved bar hanger. In no case shall switch box support and clips used for mounting boxes in old work be used unless specifically called for. Top of outlet box shall be level.

F. All ceiling or wall recessed outlet boxes or their associated plaster rings shall be flush with the finished surface. Using coverplate to secure wiring devices or shimming the device is not acceptable. Contractor shall exercise due care when cutting opening in walls or ceilings for outlet boxes so that opening size will permit the proper installation of boxes and devices. Fixture studs in ceilings and bracket outlets shall be bolted with stove bolts or shall be locking type of stud mounting.

G. In addition to boxes indicated, install enough boxes to prevent damage to cables and wires during pulling-in operations.

H. Remove only knockouts as required and plug unused openings. Use threaded plugs for cast metal boxes and snap-in metal covers for sheet metal boxes.

I. "There shall be no outlets installed back to back. A minimum of 4" shall separate each outlet."

J. Where the volume allowed per conductor exceeds that allowed in Table 370-6(b) of the NEC for the minimum size outlet specified, a larger size outlet box shall be used and shall be sized in accordance with the table noted above.

K. Outlet boxes shall be clean and free from dust, paint, dirt, plaster ready mix joint compound and /or any other debris.

1.04 LABELING AND IDENTIFICATION

A. All junction box cover plates shall be labeled identifying the system it contains. The label shall be neatly hand written with a wide tip permanent non-removable marker and be easily identified. Junction boxes containing line voltage wiring shall include panel and circuit designation (ex. HA - 1,3,5 or LA – 2,4,6). Junction boxes utilized for low

voltage system shall be labeled in accordance with the system (ex. FA for Fire Alarm System).

END OF SECTION

SECTION 260050
WIRING DEVICES AND DEVICE PLATE

1.01 SUBMITTALS

A. Submit product data under provisions of Section 260000, GENERAL.

B. Provide product data showing configurations, finishes, dimensions, and manufacturer's instructions.

1.02 REFERENCES

A. FS W-C-596 - Electrical Power Connector, Plug, Receptacle, and Cable Outlet.

B. FS W-S-896 - Switch, Toggle.

C. NEMA WD 1 - General-Purpose Wiring Devices.

D. NEMA WD 5 - Specific-Purpose Wiring Devices.

1.03 MANUFACTURERS

A. For the purpose of selecting quality and type of device, equipment manufactured by Hubbell has been specified. The following manufacturers meeting this specification are acceptable:

1. Pass and Seymour
2. Cooper
3. Leviton

1.04 PRODUCTS

A. Switches: All wall switches shall be rated 20 ampere, 120/277 volts, have self grounding provisions, side wiring only and shall be of the silent type.

1. Single pole: HBL 1221.
2. Double pole single throw: HBL 1222.
3. Three way: HBL 1223.
4. Four way: HBL 1224.

5. Key switch single pole HBL 1221l, three-way: HBL 1223L, four-way: HBL 1234L. Three way and four way key switches shall be keyed alike.
6. Single pole, pilot light, red handle (lit in “on” position): HBL 1297.
7. Despard single pole switches installed in mullions. Pass & Seymour ACD 201.

B. Receptacle: All receptacles shall be of the grounding type, tamper resistant (TR) rated, of the configuration shown on the drawings and shall be flush wall mounting type.

1. Standard duplex receptacle: 20 ampere, 125 volt, NEMA type 5-20 R, 2 pole, 3 wire, straight blade, U-grounding slot. HBL 5362. (TR)

2. Power, receptacle with matching plug: 20 ampere, 125/250 volt, NEMA type 14-20, 3 pole 4 wire grounded, straight blade type. HBL 8410.

3. Power receptacle with matching plug: 20 ampere, 250 volt, NEMA type 6-20R 2-pole, 3 wire grounded, straight blade type. HBL 5462.

4. Power receptacle with matching plug: 30 ampere, 250 volt, NEMA type 6-30R 2-pole, 3 wire, u-grounded slot, straight blade type. HBL 9330.

5. Power receptacle with matching plug: 50 ampere, 125/250 volt, NEMA type 14-50R, 3-pole, 4 wire grounded, straight blade type. HBL 9450A.

6. Ground fault interrupter receptacle: Specification Grade, tamper resistant (TR) rated, 20 ampere, 125 volts, NEMA type 5-20R, 2-pole, 3-wire with grounded U slot. GF 5262. (TR)

C. Device plates: Plates shall be furnished for all devices and outlets indicated on the drawings (telephone, computer, TV, etc.). All plates on masonry walls shall be oversized jumbo type.

1. Flush mounted plates: Beveled type with smooth rolled outer edge, stainless steel type 302 with brushed finish.

2. Surface box plates, beveled, galvanized steel, pressure formed for smooth edge to fit box, unless located in a highly corrosive area.

3. Die cast weatherproof cover. Lockable hasp vertical mounting. Intermatic #WP1010MC.

1.05 INSTALLATION

A. Switches:

1. Switches shall be connected to the live side of the circuit and shall control only the outlets indicated.

2. Conductors shall be looped around the terminal screw.

3. Where more than one switch is indicated in the same location switches shall be gang mounted under a common plate.

4. Where multi-wire switching (360 volt potential) occurs, a barrier shall be provided between switches.

5. Center line of switches in general, shall be set 3'-6" above the floor (off position down) and shall clear the door trim or corner by 4" or center the space occupied.

6. Architectural plans shall be consulted before placing switches so they will in every case be located on the strike side of the door and clear door, chair, window, and baseboard moldings.

7. Switches shall be screwed tight to the boxes and shall not depend on the cover plate to pull them tight.

B. Receptacles:

1. Conductors shall be looped around the terminal screws, "DO NOT BACK WIRE DEVICES."

2. Receptacles shall be grounded by the green wire bond and shall be pigtailed as shown on the drawings.

3. Receptacles shall be screwed tight to the plaster ring or outlet box and shall not depend on the device plate to pull them tight.

4. Center line of general use receptacles shall be in general, set 18" above the floor with receptacle mounted in the vertical position and with grounding pole at the bottom.

5. Coordinate receptacle height with Architectural drawings and locate so that bottom of receptacle plate shall be 1" above counter or back splash and clear all moldings.

6. Center line of receptacles located adjacent to lavatories in toilets shall be set 3'-6" above floor.

7. Receptacles serving water coolers shall be located within cooler housing or as close to bottom of housing as possible. Cord serving unit shall be as short as possible. In no case shall cord or receptacle be seen from normal viewing angle.

8. All receptacles installed in bathrooms, toilets, within 6 feet of lavatories or sinks or on building exterior shall be ground fault circuit interrupter type.

9. All receptacles installed outdoors shall be GFCI type.

C. Plates:

1. Plates shall be level and all edges shall be in full contact with wall.

2. Plates shall be furnished for all devices and other outlets indicated on the drawings.

3. Install plates on outlet boxes and junction boxes in unfinished areas above ceilings and on surface mounted outlets.

4. Plates shall not be used to keep devices secure.

5. Plates shall be clean and free from dust, plaster or paint and spots.

6. Plate shall cover openings around outlets.

END OF SECTION

SECTION 260060
LED INTERIOR LIGHTING

PART 1 - GENERAL

1.1 RELATED DOCUMENTS

A. Drawings and general provisions of the Contract, including General and Supplementary Conditions and Division 01 Specification Sections, apply to this Section.

1.2 SUMMARY

A. Section Includes:

1. Interior solid-state luminaires that use LED technology.
2. Lighting fixture supports.

1.3 DEFINITIONS

A. CCT: Correlated color temperature.

B. CRI: Color Rendering Index.

C. Fixture: See "Luminaire."

D. IP: International Protection or Ingress Protection Rating.

E. LED: Light-emitting diode.

F. Lumen: Measured output of lamp and luminaire, or both.

G. Luminaire: Complete lighting unit, including lamp, reflector, and housing.

1.4 SUBMITTALS

A. Product Data: For each type of product.

1. Arrange in order of luminaire designation.
2. Include data on features, accessories, and finishes.
3. Include physical description and dimensions of luminaires.
4. Include emergency lighting units, including batteries and chargers.

5. Include life, output (lumens, CCT, and CRI), and energy efficiency data.
6. Photometric data and adjustment factors based on laboratory tests[, complying with IESNA Lighting Measurements Testing and Calculation Guides, of each lighting fixture type.

    a. Manufacturers' Certified Data: Photometric data certified by manufacturer's laboratory with a current accreditation under the National Voluntary Laboratory Accreditation Program for Energy Efficient Lighting Products.
    b. Testing Agency Certified Data: For indicated luminaires, photometric data certified by a qualified independent testing agency. Photometric data for remaining luminaires shall be certified by manufacturer.

B. Shop Drawings: For nonstandard or custom luminaires.

1. Include plans, elevations, sections, and mounting and attachment details.
2. Include details of luminaire assemblies. Indicate dimensions, weights, loads, required clearances, method of field assembly, components, and location and size of each field connection.
3. Include diagrams for power, signal, and control wiring.

C. Samples: For each luminaire and for each color and texture with standard factory-applied finish.

D. Product Schedule: For luminaires and lamps.

1.5 CLOSEOUT SUBMITTALS

A. Operation and Maintenance Data: For luminaires and lighting systems to include in operation and maintenance manuals.

1. Provide a list of all fixture/lamp types used on Project; use ANSI and manufacturers' codes.

1.6 QUALITY ASSURANCE

A. Luminaire Photometric Data Testing Laboratory Qualifications: Luminaire manufacturer's laboratory that is accredited under the NVLAP for Energy Efficient Lighting Products.

B. Provide luminaires from a single manufacturer for each luminaire type.

C. Each luminaire type shall be binned within a three-step MacAdam Ellipse to ensure color consistency among luminaires.

1.7 DELIVERY, STORAGE, AND HANDLING

A. Protect finishes of exposed surfaces by applying a strippable, temporary protective covering before shipping.

1.8 WARRANTY

A. Warranty: Manufacturer and Installer agree to repair or replace components of luminaires that fail in materials or workmanship within specified warranty period.

B. Warranty Period: Five year(s) from date of Substantial Completion.

PART 2 - PRODUCTS

2.1 LUMINAIRE REQUIMENTS

A. Electrical Components, Devices, and Accessories: Listed and labeled as defined in NFPA 70, by a qualified testing agency, and marked for intended location and application.

B. NRTL Compliance: Luminaires for hazardous locations shall be listed and labeled for indicated class and division of hazard by an NRTL.

C. Recessed Fixtures: Comply with NEMA LE 4.

D. Bulb shape complying with ANSI C79.1.

E. Lamp base complying with ANSI C81.61 or IEC 60061-1.

F. CRI of 80. CCT of 4000 K.

G. Rated lamp life of 50,000 hours.

H. Lamps dimmable from 100 percent to 0 percent of maximum light output.

I. Internal driver.

J. Nominal Operating Voltage: 120 V ac or 277 V ac.

1. Lens Thickness: At least 0.125 inch minimum unless otherwise indicated.

K. Housings:

1. Extruded-aluminum housing and heat sink.
2. Clear powder-coat finish.

2.2 MATERIALS

A. Metal Parts:

1. Free of burrs and sharp corners and edges.
2. Sheet metal components shall be steel unless otherwise indicated.
3. Form and support to prevent warping and sagging.

B. Doors, Frames, and Other Internal Access: Smooth operating, free of light leakage under operating conditions, and designed to permit relamping without use of tools. Designed to prevent doors, frames, lenses, diffusers, and other components from falling accidentally during relamping and when secured in operating position.

C. Diffusers and Globes:

1. Acrylic Diffusers: One hundred percent virgin acrylic plastic, with high resistance to yellowing and other changes due to aging, exposure to heat, and UV radiation.
2. Glass: Annealed crystal glass unless otherwise indicated.
3. Lens Thickness: At least 0.125 inch minimum unless otherwise indicated.

D. Housings:

1. Extruded-aluminum housing and heat sink.
2. Clear powder-coat painted finish.

E. Factory-Applied Labels: Comply with UL 1598. Include recommended lamps. Locate labels where they will be readily visible to service personnel, but not seen from normal viewing angles when lamps are in place.

1. Label shall include the following lamp characteristics:

a. "USE ONLY" and include specific lamp type.
b. Lamp diameter, shape, size, wattage, and coating.
c. CCT and CRI for all luminaires.

2.3 METAL FINISHES

A. Variations in finishes are unacceptable in the same piece. Variations in finishes of adjoining components are acceptable if they are within the range of approved Samples and if they can be and are assembled or installed to minimize contrast.

2.4 LUMINAIRE FIXTURE SUPPORT COMPONENTS

A. Single-Stem Hangers: 1/2-inch steel tubing with swivel ball fittings and ceiling canopy. Finish same as luminaire.

B. Wires: ASTM A 641/A 641 M, Class 3, soft temper, zinc-coated steel, 14 gage.

C. Rod Hangers: 3/16-inch (5-mm) minimum diameter, cadmium-plated, threaded steel rod.

D. Hook Hangers: Integrated assembly matched to luminaire, line voltage, and equipment with threaded attachment, cord, and locking-type plug.

PART 3 - EXECUTION

3.1 EXAMINATION

A. Examine substrates, areas, and conditions, with Installer present, for compliance with requirements for installation tolerances and other conditions affecting performance of the Work.

B. Examine roughing-in for luminaire to verify actual locations of luminaire and electrical connections before fixture installation. Proceed with installation only after unsatisfactory conditions have been corrected.

3.2 TEMPORARY LIGHTING

A. If approved by the Engineer, use selected permanent luminaires for temporary lighting. When construction is sufficiently complete, clean luminaires used for temporary lighting and install new lamps.

3.3 INSTALLATION

A. Comply with NECA 1.

B. Install luminaires level, plumb, and square with ceilings and walls unless otherwise indicated.

C. Install lamps in each luminaire.

D. Supports:

1. Sized and rated for luminaire weight.
2. Able to maintain luminaire position after cleaning and relamping.
3. Provide support for luminaire without causing deflection of ceiling or wall.
4. Luminaire mounting devices shall be capable of supporting a horizontal force of 100 percent of luminaire weight and vertical force of 400 percent of luminaire weight.

E. Flush-Mounted Luminaire Support:

1. Secured to outlet box.
2. Attached to ceiling structural members at four points equally spaced around circumference of luminaire.
3. Trim ring flush with finished surface.

F. Wall-Mounted Luminaire Support:

1. Attached to structural members in walls.

2. Do not attach luminaires directly to gypsum board.

G. Ceiling-Mounted Luminaire Support:

1. Ceiling mount with two 5/32-inch- diameter aircraft cable supports adjustable to 120 inches in length.
2. Ceiling mount with pendant mount with 5/32-inch diameter aircraft cable supports adjustable to 120 inches in length.
3. Ceiling mount with hook mount.

H. Suspended Luminaire Support:

1. Pendants and Rods: Where longer than 48 inches, brace to limit swinging.
2. Stem-Mounted, Single-Unit Luminaires: Suspend with twin-stem hangers. Support with approved outlet box and accessories that hold stem and provide damping of luminaire oscillations. Support outlet box vertically to building structure using approved devices.

3. Continuous Rows of Luminaires: Use tubing or stem for wiring at one point and tubing, rod or wire support for suspension for each unit length of luminaire chassis, including one at each end.
4. Do not use ceiling grid as support for pendant luminaires. Connect support wires or rods to building structure.

I. Ceiling-Grid-Mounted Luminaires:

1. Secure to any required outlet box.
2. Secure luminaire to the luminaire opening using approved fasteners in a minimum of two (2) locations, at opposite corners of luminaire.
3. Use approved devices and support components to connect luminaire to ceiling grid and to building structure in a minimum of two (2) locations, spaced at opposite diagonal corners of luminaire.

J. Flexible conduit and wiring from outlet box to fixture shall be minimum 3/8"C., and minimum #18 THHN conductors. Factory supplied whips of smaller ratings are not acceptable. Where 0-10 volt dimming is utilized, use #18 (TJP), grey/purple jacketed conductor integral to flex.

3.4 IDENTIFICATION

A. Identify system components, wiring, cabling, and terminals. Comply with requirements for identification specified in Section 260120 “ Equipment Identification."

3.5 FIELD QUALITY CONTROL

A. Perform the following tests and inspections:

1. Operational Test: After installing luminaires, switches, and accessories, and after electrical circuitry has been energized, test units to confirm proper operation.
2. Test for Emergency Lighting: Interrupt power supply to demonstrate proper operation. Verify transfer from normal power to battery power and retransfer to normal.

B. Luminaire will be considered defective if it does not pass operation tests and inspections.

C. Prepare test and inspection reports.

END OF SECTION

SECTION 260070
DISCONNECT SWITCHES

1.01 SUBMITTALS

A. Shop drawings shall be submitted and shall consist of manufacturer's published literature.

1.02 MANUFACTURERS

A. Acceptable manufacturers are:
   1. Square "D" Company
   2. G. E.
   3. Siemens
   4. Eaton

1.03 EQUIPMENT

A. Disconnect switches shall be provided for all motors and strip heaters located out of sight of motor controller, and where specifically indicated on the drawings. Disconnect switches shall disconnect all ungrounded conductors. When exposed to weather, enclosure shall be NEMA – 4X. Switches shall be installed to be fully accessible in accordance with Article 110-26 of the National Electrical Code.

B. All disconnects shall be heavy duty type and shall be equipped with factory installed equipment ground kit bonded to the can for grounding purposes.

C. For single phase motors, a single - or double-pole toggle switch, rated only for alternating current, will be acceptable for capacities less than 30 amperes, provided the ampere rating of the switch is at least 125 percent of the motor rating. Enclosed safety switches shall be horsepower rated in conformance with Table III of Fed. Spec. W-D-865. Switches shall disconnect all ungrounded conductors.

D. Each disconnect serving ground mounted exterior A/C units shall be equipped with a padlock (Master 3206) all keyed alike.

E. All disconnects shall be equipped with provisions to lock the handle in the OFF position.

F. All disconnects shall be fusible type, fused in accordance with the name plate data on the unit. Disconnects serving water heaters or resistance heat strips shall be fused at 125% of the full load amps of the unit.

G. Install fuses so that ampere rating can be read without having to remove fuses.

H. All fuses shall be as noted in Section 26 00 15.

I. Disconnects shall be identified as required under Section 26 01 20.

J. Maintain 3'-0" clearance in front of disconnect having voltage rating of 250 volts and 4'-0" clearance in front of disconnect having voltage rating of 480 volts. Do not locate disconnect over other electrical equipment (i.e.: transformers). See 26 00 00-1.14-I.

END OF SECTION

SECTION 260100
PULL BOXES AND JUNCTION BOXES AND FITTINGS

1.01 PULL BOXES AND JUNCTION BOXES AND FITTINGS

A. Boxes shall be provided in the raceway systems wherever required for the pulling of wires and the making of connections.

B. Pull boxes of not less than the minimum size required by the National Electrical Code Article 370 shall be constructed of code-gauge galvanized sheet steel. Boxes shall be furnished with screw-fastened covers. Covers on flush wall mounted boxes in well appointed areas (offices, reception, classrooms, media center, etc) shall be minimum 1/16 302 stainless steel. Boxes located on the exterior of the building shall be watertight. Covers shall be secured with tamper proof screws.

C. Boxes shall be securely and rigidly fastened to the surface of which they are mounted or shall be supported from structural member of the building either directly or by using a substantial and approved metal rod or brace.

D. All boxes shall be so installed that the wiring contained in them can be rendered accessible without removing part of the building.

E. Where several circuits pass through a common pull box, the circuits shall be tagged to indicate clearly their electrical characteristics, circuit number and designation.

F. All junction boxes larger than 4" x 4" flush mounted in wall shall have overlapping cover plate to cover rough-in openings.

END OF SECTION

SECTION 260110
GROUNDING

PART 1 GENERAL:

1.01 RELATED DOCUMENTS

A. Drawings and general provisions of the Contract documents including General and Supplementary Conditions and Division 1 Specification Sections, apply to the Section.

1.02 SUMMARY

A. The work required under this section of the specifications consists of furnishing, installation and connections of the building secondary grounding systems. Exterior branch circuit wiring and feeder conductors extended beyond the building are included. The building electrical system shall be a 3 phase, 4 wire grounded wye delta system supplemented with equipment grounding system. Equipment grounding system shall be established with equipment grounding conductors; the use of metallic raceways for equipment grounding is not acceptable.

1.03 QUALITY ASSURANCE

A. Industry Referenced Standards: The following specifications and standards are incorporated into and become a part of this Specification by Reference.

1. Underwriters' Laboratories, Inc. (UL) Publications:

No.44 Rubber-Insulated Wire & Cables
No.83 Thermoplastic-Insulated Wires
No.467 Electrical Grounding & Bonding Equipment
No.493 Thermoplastic-Insulated Underground Feeder & Branch Circuit Cables
No.486 Wire Connectors and Soldering Lugs

2. National Electrical Manufacturers' Standards (NEMA):

WC-5 Thermoplastic Insulated Wire & Cable
WC-7 Cross-Linked-Thermosetting Polyethylene Insulated Wire

3. National Fire Protection Association Publication (NFPA):

No.70 National Electrical Code (NEC)

B. Acceptable Manufacturers: Products produced by the following manufacturer which conform to this specification are acceptable.

1. Hydraulically applied conductor terminations:

a. Square D
b. Burndy
c. Ilsco
d. Scotch (3M)
e. Thomas and Betts (T&B)
f. Anderson

2. Mechanically applied (crimp) conductor terminations:

a. Scotch (3M)
b. Ideal
c. Thomas and Betts (T&B)
d. Burndy

PART 2 PRODUCTS:

2.01 GENERAL MATERIALS REQUIREMENTS

A. Provide all materials under this section of the specifications. All materials shall be new.

B. All materials shall be UL listed and bear a UL label.

C. Refer to the specific specification section for the description and requirements of materials mentioned herein for installation.

2.02 GROUNDING CONDUCTORS

A. Grounding electrode conductor shall be bare or green insulated copper conductor sized as indicated on the drawings.

B. Equipment grounding conductors shall be green insulated type THHN conductors sized as indicated on the drawings. Where size is not

indicated on the drawings, conductor size shall be determined from the National Electrical Code table of sizes of equipment grounding conductors.

C. Bonding jumpers shall be flexible copper bonding jumpers sized in accordance with the National Electrical Code table on sizes of equipment grounding electrode conductors.

2.03 MOTOR CONTROLLERS

A. Provide a conductor termination grounding lug bonded to the enclosure of each motor controller.

B. Provide an equipment ground bar with bonding screw in each disconnect for grounding purposes.

2.04 DEVICES

A. Each receptacle and switch device shall be furnished with a grounding screw connected to the metallic device frame. Bond equipment grounding conductor to each outlet box. For isolated ground receptacles, bond equipment grounding conductor to box, and isolated ground conductor to device grounding screw.

2.05 GROUND RODS

A. Ground rods shall be 3/4" x 10'-0" copper clad steel. Connection to all ground rods shall be by exothermic weld.

PART 3 EXECUTION

3.01 INSTALLATION

A. Ground all non-current carrying parts of the electrical system, i.e., wireways, equipment enclosures and frames, junction and outlet boxes, machine frames and other conductive items in close proximity with electrical circuits, to provide a low impedance path for potential grounded faults.

B. Service entrance and separately derived electrical systems, grounding electrode system.

1. The neutral conductor of the electrical service serving the premises wiring system shall be grounded to the ground bus bar in the service equipment which shall be grounded to the cold water system, the ground rod system, and other grounding electrodes specified herein or indicated on the drawings. Grounding electrode conductors shall be installed in rigid, non-metallic conduit to point of ground connection, unless subject to physical damage in which case they shall be installed in galvanized rigid steel. Where metallic conduit is permitted, bond conduit at both ends to grounding electrode conductor with a UL bonding bushing.

2. Make connection to main water line, fire sprinkler piping, and gas piping entering the building. Make connections ahead of any valve or fittings whose removal may interrupt ground continuity. Install a bonding jumper of the same size as the grounding conductor around the water meter.

3. Bond together the following systems to form the grounding electrode system. All system connections shall be made as close as possible to the service entrance equipment and each connected at the service entrance equipment ground bus. Do not connect electrode systems together except at ground bus.

    a. Cold water piping system
    b. Ground rod system
    c. Structural steel metal building frame, see detail on drawings
    d. Main re-bar in a foundation footing
    e. Fire sprinkler piping

4. Ground the neutral of all dry type transformers as indicated on the drawings.

5. Grounding electrode connections to structural steel, reinforcing bars, ground rods, or where indicated on the drawings shall be with chemical exothermic weld connection devices recommended for the particular connection type. Connections to piping shall be with UL listed mechanical ground clamps.

6. Bonding shall be in accordance with the National Electrical Code.

7. Install ground rods where indicated on the drawings with the top of the ground rods 12" below finished grade.

C. Equipment Grounding Conductor

1. Grounding conductors shall be provided in all branch circuit raceways and cables. Grounding conductors shall be the same AWG size as branch circuit conductors.

2. Grounding conductors for feeders are typically indicated on the drawings and the raceway is sized to accommodate grounding conductor shown. Where grounding conductor size is not indicated on the drawings, conductor shall be in accordance with the equipment grounding conductor table of the National Electrical Code.

3. A grounding conductor shall be installed in all flexible conduit installations. For branch circuits, grounding conductor shall be sized to match branch circuit conductors.

4. A feeder serving several panelboards shall have a continuous grounding conductor which shall be connected to each related cabinet grounding bar.

5. The equipment grounding conductor shall be attached to equipment with bolt or sheet metal screw used for no other purpose. Where grounding conductor is stranded, attachment shall be made with lug attached to grounding conductor with crimping tools.

6. Ground all motors by drilling and tapping the bottom of the motor junction box with a round head bolt used for no other purpose. Conductor attachment shall be through the use of a lug attached to conductor with a crimping tool.

7. Equipment grounding conductors shall terminate on panelboard, switchboard, or motor control center grounding bus only. Do not terminate on neutral bus. Provide a single terminals lug for each conductor. Conductor shall terminate the same section as the phase conductors originate. Do not terminate neutral conductors on the ground bus.

C. Other Grounding Requirements

1. Each telephone backboard and data network rack shall be provided with a No.6 grounding conductor. Ground conductor shall be routed to ground bar in nearest panel. Terminate conductor by stapling to backboard. Provide 6' slack conductor. If conductor is routed in a metal conduit, provide a grounding bushing at conduit end and bond to lug on ground bushing.
2. Lighting fixtures shall be grounded with a green insulated ground wire secured to the fixture with a UL listed bond lug, screw, or clip specifically made for such use.

3.02 TESTING

A. Upon completion of the ground rod installation, grounding resistance reading shall be taken before connection is made to the building cold water piping system. Ground resistance readings shall not be taken within forty-eight hours of rainfall. Results of ground resistance readings shall be forwarded, in writing, immediately to the Architect and Owner.

END OF SECTION

SECTION 260120
EQUIPMENT IDENTIFICATION

1.01 SUBMITTALS

A. Submit sample of laminated plastic identification plate with lettering.

1.02 MATERIALS

A. Laminated plastic plates with 3/16" high white letter etched on black background.

B. Plates shall be permanently mounted utilizing pop rivets or a permanent mastic/epoxy.

C. Painted, stenciled or indented tape identification is not acceptable.

1.03 ITEM IDENTIFICATION

A. All electrical apparatus such as wiring troughs, panelboards, individual circuit breakers, transformers and disconnect switches shall have laminated plastic identification plates. Identification shall match labeling shown on plans.

B. A "steel" circuit directory frame permanently attached at factory (not glued), and a directory card with a plastic covering shall be provided on the inside of each panel door. The directory shall be typed to identify the load fed by each circuit and the areas served. Spaces or room numbers shown on the drawings are not necessarily the final numbers to be assigned to these areas. The Contractors shall before completion of the project obtain from the Architect final space or room numbers so that it can be typed onto directory.

C. Circuit breakers and disconnects shall identify the equipment served and circuit and panel from which it is served.

D. On all panelboards the exterior identification plate shall match that on the drawings and the panel and circuit number serving the panel shall be designated within the panel.

1.04 LABELING AND IDENTIFICATION

A. All junction box cover plates shall be labeled identifying the system it contains. The label shall be neatly hand written with a wide tip

permanent non-removable marker and be easily identified. Junction boxes containing line voltage wiring shall include panel and circuit designation (ex. HA - 1,3,5 or LA – 2,4,6). Junction boxes utilized for low voltage system shall be labeled in accordance with the system (ex. FA for Fire Alarm System).

END OF SECTION

SECTION 260130
DATA OR VOICE CONDUIT AND OUTLET SYSTEM

1.01 CONDUIT SYSTEM

A. Provide a complete system of conduits and outlet boxes for data and voice wiring. Each data or voice outlet shall have a 1" conduit routed from the flushed recessed outlet box up to the accessible ceiling space above. Turn conduit out above ceiling with a 90° horizontal elbow and terminate with an insulated bushing. Where ceiling finish is exposed structure (i.e. no acoustical tile ceiling), extend conduit to an area with an accessible gypboard/acoustical ceiling. Provide nylon pull string in conduit.

B. All conduit and outlet boxes shall be for data and voice cable only. Joint use with sound systems, fire, telephone, etc. it is not acceptable.

C. Location of outlets shall be as shown on the drawings.

D. Height of wall outlets shall be as noted on the drawings. All wall outlet boxes in new construction shall be two gang type, 4" x 4" x 2 1/8" deep, with single gang plaster rings. Plaster rings shall be flush with finish of wall. Coordinate depth of plaster ring required with type of wall construction.

E. Install a quaduplex receptacle at the telephone backboard and serve with a dedicated 20 ampere 120 volt circuit. The telephone shall consist of one - 3/4" x 4' x 8' plywood. Paint all sides and edges to match room finish. Install a #6 ground conductor from the nearest ground bar in panel, provide 8'-0" of coiled slack at board. Plywood shall be fire rated. Paint shall be fire retardant.

F. See site plan for routing of telephone service conduit. Prior to routing of conduit, coordinate an on-site meeting with local utility company to determine exact location. Provide a 200 pound minimum pull strength nylon cord in the service conduit. Cap off any conduit not utilized.

G. Each data network rack shall be grounded with a #6 copper routed in ½" conduit to the ground bar in the nearest panel. If conduit is metal, provide grounding bushings at each end of conduit. Provide a quadruplex receptacle at each data network rack and serve from a dedicated 20 amp, 120 volt circuit.

H. Conduit and its installation shall be as covered under Section 26 00 20 of these specifications.

I. Outlets and their installation shall be covered under Section 26 00 40 of these specifications.

J. All conduit shall be concealed unless otherwise noted.

K. Provide 302 jumbo stainless steel blank wall plates for all outlets not cabled.

END OF SECTION

SECTION 260160
SURGE PROTECTION FOR LOW-VOLTAGE ELECTRICAL POWER CIRCUITS

PART 1 - GENERAL

1.1 SUMMARY

A. Section includes field-mounted SPDs for low-voltage (120 to 600 V) power distribution and control equipment.

1.2 DEFINITIONS

A. Inominal: Nominal discharge current.

B. MCOV: Maximum continuous operating voltage.

C. Mode(s), also Modes of Protection: The pair of electrical connections where the VPR applies.

D. MOV: Metal-oxide varistor; an electronic component with a significant non-ohmic current-voltage characteristic.

E. OCPD: Overcurrent protective device.

F. SCCR: Short-circuit current rating.

G. SPD: Surge protective device.

H. VPR: Voltage protection rating.

1.3 ACTION SUBMITTALS

A. Product Data: For each type of product.

1. Include rated capacities, operating characteristics, electrical characteristics, and furnished specialties and accessories.
2. Copy of UL Category Code VZCA certification, as a minimum, listing the tested values for VPRs, Inominal ratings, MCOVs, type designations, OCPD requirements, model numbers, system voltages, and modes of protection.

1.4 INFORMATIONAL SUBMITTALS

A. Field quality-control reports.

B. Sample Warranty: For manufacturer's special warranty.

1.5 CLOSEOUT SUBMITTALS

A. Maintenance Data: For SPDs to include in maintenance manuals.

1.6 WARRANTY

A. Manufacturer's Warranty: Manufacturer agrees to replace or replace SPDs that fail in materials or workmanship within specified warranty period.

1. Warranty Period: Five years from date of Substantial Completion.

PART 2 - PRODUCTS

2.1 GENERAL SPD REQUIREMENTS

A. SPD with Accessories: Listed and labeled as defined in NFPA 70, by a qualified testing agency, and marked for intended location and application.

B. Comply with NFPA 70.

C. Comply with UL 1449.

D. MCOV of the SPD shall be the nominal system voltage.

2.2 SERVICE ENTRANCE SUPPRESSOR

A. Manufacturers: Subject to compliance with requirements, provide products by one of the following:

1. Eaton Corporation.
2. Emerson Electric Co.
3. GE Zenith Controls.
4. PowerLogics, Inc.
5. Schneider Electric Industries SAS.

B. SPDs: Comply with UL 1449, Type 2.

1. SPDs with the following features and accessories:

a. Internal thermal protection that disconnects the SPD before damaging internal suppressor components.
b. Indicator light display for protection status.
c. Form-C contacts rated at 2 A and 24-V ac, one normally open and one normally closed, for remote monitoring of protection status. Contacts shall reverse on failure of any surge diversion module or on opening of any current-limiting device. Coordinate with building power monitoring and control system.
d. Surge counter.

C. Comply with UL 1283.

D. Peak Surge Current Rating: The minimum single-pulse surge current withstand rating per phase shall not be less than 480 kA. The peak surge current rating shall be the arithmetic sum of the ratings of the individual MOVs in a given mode.

E. Protection modes and UL 1449 VPR for grounded wye circuits with 480Y/277 V 208Y/120 V, three-phase, four-wire circuits shall not exceed the following:

1. Line to Neutral: 1200 V for 480Y/277 V.
2. Line to Ground: 1200 V for 480Y/277 V.
3. Line to Line: 2000 V for 480Y/277 V.

F. Protection modes and UL 1449 VPR for 240/120 V, single-phase, three-wire circuits shall not exceed the following:

1. Line to Neutral: 700 V.
2. Line to Ground: 700 V.
3. Line to Line: 1000 V.

G. SCCR: Equal or exceed 200 kA.

H. Inominal Rating: 20 kA.

2.3 PANEL SUPPRESSORS

A. Manufacturers: Subject to compliance with requirements, provide products by one of the following:

1. Eaton Corporation.
2. Emerson Electric Co.
3. GE Zenith Controls.
4. LEA International; Protection Technology Group.
5. Schneider Electric Industries SAS.

B. SPDs: Comply with UL 1449, Type 2.

1. Include LED indicator lights for power and protection status.
2. Internal thermal protection that disconnects the SPD before damaging internal suppressor components.
3. Include Form-C contacts rated at 5 A and 250-V ac, one normally open and one normally closed, for remote monitoring of protection status. Contacts shall reverse on failure of any surge diversion module or on opening of any current-limiting device. Coordinate with building power monitoring and control system.

C. Peak Surge Current Rating: The minimum single-pulse surge current withstand rating per phase shall not be less than 100 kA. The peak surge current rating shall be the arithmetic sum of the ratings of the individual MOVs in a given mode.

D. Comply with UL 1283.

E. Protection modes and UL 1449 VPR for grounded wye circuits with 480Y/277 V 208Y/120 V, three-phase, four-wire circuits shall not exceed the following:

1. Line to Neutral: 1200 V for 480Y/277 V - 700 V for 208Y/120 V.
2. Line to Ground: 1200 V for 480Y/277 V - 700 V for 208Y/120 V.
3. Neutral to Ground: 1200 V for 480Y/277 V - 700 V for 208Y/120 V.
4. Line to Line: 2000 V for 480Y/277 V - 1200 V for 208Y/120 V

F. Protection modes and UL 1449 VPR for 240/120-V, single-phase, three-wire circuits shall not exceed the following:

1. Line to Neutral: 700 V.
2. Line to Ground: 700 V.
3. Neutral to Ground: 700 V.
4. Line to Line: 1200 V.

G. SCCR: Equal or exceed 200 kA.

H. Inominal Rating: 20 kA.

2.4 ENCLOSURES

A. Indoor Enclosures: NEMA 250, Type 1.

B. Outdoor Enclosures: NEMA 250, Type 4X.

2.5 CONDUCTORS AND CABLES

A. Power Wiring: Same size as SPD leads, complying with Section 26 05 19 "Low-Voltage Electrical Power Conductors and Cables."

B. Class 2 Control Cables: Multiconductor cable with copper conductors not smaller than No. 18 AWG, complying with Section 26 05 19 "Low-Voltage Electrical Power Conductors and Cables."

C. Class 1 Control Cables: Multiconductor cable with copper conductors not smaller than No. 14 AWG, complying with Section 26 05 19 "Low-Voltage Electrical Power Conductors and Cables."

PART 3 - EXECUTION

3.1 INSTALLATION

A. Comply with NECA 1.

B. Install an OCPD or disconnect as required to comply with the UL listing of the SPD.

C. Install SPDs with conductors between suppressor and points of attachment as short and straight as possible, and adjust circuit-breaker positions to achieve shortest and straightest leads. Do not splice and extend SPD leads unless specifically permitted by manufacturer. Do not exceed manufacturer's recommended lead length. Do not bond neutral and ground.

D. Use crimped connectors and splices only. Wire nuts are unacceptable.

E. Wiring:

1. Power Wiring: Comply with wiring methods in Section 26 00 30 "Low-Voltage Electrical Power Conductors and Cables."
2. Controls: Comply with wiring methods in Section 26 00 30 "Low-Voltage Electrical Power Conductors and Cables."

3.2 FIELD QUALITY CONTROL

A. Perform the following tests and inspections with the assistance of a factory-authorized service representative.

1. Compare equipment nameplate data for compliance with Drawings and Specifications.
2. Inspect anchorage, alignment, grounding, and clearances.
3. Verify that electrical wiring installation complies with manufacturer's written installation requirements.

B. An SPD will be considered defective if it does not pass tests and inspections.

C. Prepare test and inspection reports.

3.3 STARTUP SERVICE

A. Complete startup checks according to manufacturer's written instructions.

B. Do not perform insulation-resistance tests of the distribution wiring equipment with SPDs installed. Disconnect SPDs before conducting insulation-resistance tests, and reconnect them immediately after the testing is over.

C. Energize SPDs after power system has been energized, stabilized, and tested.

3.4 DEMONSTRATION

A. Train Owner's maintenance personnel to operate and maintain SPDs.

END OF SECTION

SECTION 260175
FIRESTOPPING

1.01 RELATED DOCUMENTS

A. The requirements of the general conditions, supplementary conditions, and division 1, general requirements, apply to Work in this Section.

1.02 DESCRIPTION

A. This Section describes the requirements for furnishing and installing firestopping for fire-rated construction. This includes:

1. All openings in fire-rated floors and wall assemblies, both blank (empty) and those accommodating penetrating items such as cables, conduits, etc.

1.03 REFERENCES

A. ASTM E 814: "Standard Method of Fire Tests of Through-Penetration Firestops"
B. UL 1479, UBC 7-5: (both are same as A above)
C. ASTM E 119: "Standard Method of Fire Tests of Building Construction and Materials"
D. UL263, UBC 7-1: (both are same as C above)
E. UL 2079: "Standard for Tests for the Fire Resistance of Building Joint Systems"
F. Published Through-Penetration Systems by recognized independent testing agencies.
   1. UL Fire Resistance Directory.
   2. Warnock Hersey Certification Listings, current year.

1.04 QUALITY ASSURANCE

A. Firestopping materials shall conform to Flame (F) and Temperature (T) ratings as required by local building code and as tested by nationally accepted test agencies per ASTM 814, UL 1479 or UL 2079. The F rating must be a minimum of one (1) hour but not less than the fire resistance rating of the assembly being penetrated. T rating, when required by code authority, shall be based on the measurement of the temperature rise on the penetrating item(s). The fire test pressure differential of a minimum 0.01 inches of water column is required.

B. Fire stopping products shall be asbestos free, free of any PCBs and free of any lead.
C. Do not use any product containing solvents, or that require hazardous waste disposal.

1.05 SUBMITTALS

A. Submit manufacturer's product literature for each type of Firestop material to be installed. Literature shall indicate product characteristics, typical uses, performance, limitation criteria and test data.

B. Submit manufacturer's Warranty.
C. Material Safety Data Sheets: Submit MSDS for each firestop product.
D. Shop Drawings: Show typical installation details for methods of installation. Indicate which firestop materials will be used where and thickness for different hourly ratings.

1.06 PRODUCT DELIVERY, STORAGE AND HANDLING

A. Deliver materials in the manufacturers' original, unopened containers or packages with manufacturers' name, product identification, lot number, UL or Warnock Hersey labels, and mixing and installation instructions, as applicable.
B. Store materials in the original, unopened containers or packages, and under conditions recommended by manufacturer.
C. All firestop materials shall be installed prior to expiration of shelf life.

1.07 PROJECT CONDITIONS

A. Verify existing conditions and substrates before starting work.
B. Do not use materials that are based on organic solvents.
C. During installation, provide masking and drop cloths to prevent firestopping products from contaminating any adjacent surfaces.
D. Conform to ventilation requirements by manufacturer's installation instructions or Material Safety Data Sheet.
E. Weather Conditions: Do not proceed with installation of firestop products when temperatures are in excess of or below the manufacturer's recommendations.
F. Schedule installation of firestop products after completion of penetration item installation but prior to covering or concealing of openings.
G. Coordinate this work with work of other trades.

PART 2 - PRODUCTS

2.01 ACCEPTABLE MANUFACTURERS

A. Subject to compliance with requirements, provide products of one of the following manufacturers as shown below and further defined by the materials listed in Part 2.02 of this section.

1. The RectorSeal Corporation. Products as listed are a standard of generic types.
2. International Protective Coatings
3. 3M Company
4. Hilti

2.02 MATERIALS

A. Firestop Mortars:

1. Metacaulk Fire Rated Mortar by The RectorSeal Corporation
2. HILTI CP637 Firestop Mortar
3. 3M Firestop Mortar

B. Firestop Sealants and Caulks:

1. Metacaulk 950 by The RectorSeal Corporation
2. Metacaulk 835 by The RectorSeal Corporation
3. Metacaulk 805 by The RectorSeal Corporation
4. Metacaulk 1000 by The RectorSeal Corporation
5. CP 25WB+Caulk by 3M
6. Flame-Safe FS900 Series by International Protective Coatings.
7. HILTI FS-One Intumescent Firestop Sealant

C. Firestop Putty:

1. Metacaulk Fire Rated Putty by The RectorSeal Corporation
2. Metacaulk Fire Rated Putty pads by The RectorSeal Corporation
3. MPS-2 Moldable Putty Stix by 3M
4. MPP-4S Moldable Putty Pads by 3M
5. HILTI CP618 Firestop Putty

D. Firestop Sleeves:

1. Metacaulk Pipe Collars by The RectorSeal Corporation
2. Plastic Pipe Devices by 3M
3. HILTI CP6421643 Firestop Collar

E. Intumescent Wrap Strips:

1. Metacaulk Wrap Strip by The RectorSeal Corporation
2. FS-195 Wrap Strip by 3M
3. HILTI

F. Firestop Mastic:

1. Metacaulk 1100 by The RectorSeal Corporation
2. HILTI
3. 3M

G. Accessories:

1. Forming/Damming Materials: Mineral Fiberboard or other type recommended by manufacturer.
2. Primer, sealant and solvent cleaner: As recommended by firestop manufacturer.

H. Where subject to movement, firestop products used shall remain flexible to allow for such normal movement of building structure and penetrating item(s) without affecting the integrity of the firestop system.

PART 3 - EXECUTION

3.01 EXAMINATION

A. Examine the areas and conditions where firestops are to be installed and notify the Architect of conditions detrimental to proper and timely completion of the work.
B. Verify the penetrating item(s) are permanently installed and construction of fire rated assemblies are completed prior to firestop installation.
C. Prior to installation of firestop systems, clean surfaces of penetrating item(s) that will be in contact with firestop materials. Do not use any cleaning material that will either attack penetrating item(s) or firestop product to be installed.

3.02 CONDITIONS REQUIRING FIRESTOPPING

A. General:

1. Provide fire stopping for conditions specified whether or not firestopping is indicated, and, if indicated, whether such material is designated as insulation, safing or otherwise.
2. Insulation types specified in other Sections shall not be installed in lieu of firestopping material specified herein.

B. Penetrations:

1. Penetrations include conduit, cable, wire, or other elements which pass through one or both outer surfaces of a fire rated floor, wall, or partition.
2. Except for floors on grade, where a penetration occurs through a structural floor or roof and a space would otherwise remain open between the surfaces of the penetration and the edge of the adjoining structural floor or roof, provide firestopping to fill such spaces in accordance with ASTM E 814 (UL 1479).
3. These requirements for penetrations shall apply whether or not sleeves have been provided. Firestop the annular space between sleeve and surrounding surfaces.

C. Provide firestopping to fill miscellaneous voids and openings in fire rated construction in a manner essentially the same as specified herein before.

D. All junction boxes larger than 4' x 4" located in a rated wall shall be protected on sides and back of box with firestop putty pads as required to maintain integrity of rated wall.

3.03 INSTALLATION

A. Regulatory requirements: Install firestop products in accordance with fire rated test assemblies as published by either UL or Warnock Hersey or accordance with manufacturer engineer drawings.

B. Manufacturer's Instructions: Comply with manufacturer's instructions for installation of through-penetration firestop systems.

1. Firestop all holes or voids made in fire resistive assemblies, made by penetrations, to ensure against the passage of flames, smoke, and toxic gases.

2. Protect materials from damage on surface subjected to traffic and install cover plate as required on any installed firestop system that will or may be subject to traffic.
3. Tool surfaces of firestop products to provide a smooth and clean appearance.

3.04 FIELD QUALITY CONTROL

A. Follow safety procedures recommended in Material Safety Data Sheets.

B. Examine penetration firestopped areas to ensure proper installation before concealing or enclosing areas.

C. Keep areas of work accessible until inspection by Architect.

3.05 ADJUSTING AND CLEANING

A. Remove equipment, materials and debris, leaving areas in undamaged and clean conditions.

B. Neatly cut and trim materials.

END OF SECTION

SECTION 260190
ENGINE GENERATOR SET

1.01 GENERAL

A. Requirements contained in this Specification shall apply to and govern the work under this Section.

1.02 WORK INCLUDED

A. Provide labor and material necessary to install a standby diesel engine-generator set of the latest commercial type and design as specified herein.

1.03 SUBMITTALS

A. The Contractor shall furnish information showing manufacturers' model number, dimensions, and weights for the engine, generator, and major auxiliary equipment.

1.04 MANUFACTURERS

A. The following manufacturers meeting these specifications are acceptable:

1. Onan
2. Caterpillar/Olympian
3. Detroit Diesel/Williams
4. Kohler
5. Generac

1.05 SUBSTITUTIONS

A. Proposed deviations from the specifications shall be treated as follows:

1. Request for substitutions shall be made a minimum of ten (10) days prior to bid date. Manufacturers catalog data shall accompany each request and authorized acceptance shall be by addenda only.

2. Under no circumstances will assemblers of units be acceptable. To qualify as a manufacturer, the engine or alternator must be the

item manufactured and the completed engine generator set supplied by that manufacturer's authorized dealer only.

3. The Contractor shall submit copies of pertinent drawings and schematic diagrams for approval and shall include the following:

   a. Engine generator set including plans and elevations or riser views clearly indicating entrance points for each of the interconnections required.

   b. Engine generator/exciter control cubicle.

   c. Fuel consumption rate curves at various loads, ventilation and combustion CFM requirements.

   d. Exhaust mufflers and vibration isolators.

   e. Battery Charger, battery, and battery racks.

   f. Automatic load transfer switch.

   g. Actual electrical diagrams including schematic diagrams and interconnection wiring diagrams for all equipment to be provided.

   h. Legends for all devices on all diagrams.

   i. Sequence of operation explanations for all portions of all schematic wiring diagrams.

4. The specified standby KW shall be for continuous electrical service during interruption of the normal utility source and shall be certified to this effect by the manufacturer for the actual unit supplied.

5. These ratings must be substantiated by manufacturer's standard published curves. Special ratings or maximum ratings are not acceptable.

1.06 MATERIALS

A. Engine: The engine shall be 1800 RPM, water-cooled in line or Vee type four-stroke cycle compression ignition diesel. It shall meet specifications when operating on Number 2 domestic burner oil. Engines requiring premium fuels will not be considered. The engine shall be equipped with fuel, lube oil, and intake air filters, lube oil cooler, fuel transfer pump, fuel priming pump, engine driven water pump, and unit mounted instruments, water temperature gauge, lubrication oil pressure gauge, and battery charging ammeter.

1. Governor - A gear driven hydraulic governor shall maintain frequency regulation not to exceed 3% (1.8 hertz) from no load to full rated load.

2. Mounting - The units shall be mounted on a structural steel sub-base and shall be provided with suitable spring-type isolators.

3. Safety Devices - Safety shut-off for high water temperature, low oil pressure, over-speed, and engine over-crank shall be provided.

4. Guards - Guards shall be provided over all exposed moving parts as required by OSHA.

B. Generator:

1. The generator shall be rated for continuous stand-by service at 130 KW, 162 KVA at 0.8 power factor, 480/277 volts, three phase, four wire, 60 hertz, 1800 RPM.

2. The generator shall be a three phase, 60 hertz, single bearing, rotating field, synchronous type built to NEMA standards. A voltage regulator shall be provided to match the characteristics of the generator and engine. Voltage regulation shall be + - 2% from no load to full rated load. Readily accessible voltage drop, voltage level and voltage gain controls shall be provided. Voltage level adjustments shall be a minimum of + - 5%. Generator and exciter shall be inherently capable of parallel operation with other power sources of equivalent electrical characteristics, and stator shall include a twelve lead, re-connectable buss bar system for easy load connection.

C. Cooling System:

1. Radiator - A radiator with blower type fan shall be sized to maintain safe operation 110 degrees F ambient temperature. Air flow restriction from the radiator shall not exceed 0.5" HO.

2. The engine cooling system shall be pre-treated by the system supplier for the inhibition of internal corrosion, and freezing.

D. Fuel System:

1. An in-base fuel tank shall be supplied and installed by the manufacturer of the power system. The tank capacity shall be sized to operate generator at full rated load for 72 hours. Tank shall be constructed of "I" beams with a 3/16" floor plates and 10 gauge tank bottom. Tank shall incorporate 1/2" drain plugs on each end, 2" fill cap with locking provisions, level indicator, supply pipe and return pipe. Tank shall have access plate for mounting of fuel level alarm and tank inspections. Tank shall be dual wall construction provided with leak detection. Leak detection alarm status shall be shown on remote annunciator. At job completion, fuel tank shall be topped off and left full.

2. Tank shall be mounted to the skids of engine generator. Isolator pads shall be installed between pad and skid tank.

E. Weather Proof Housing and Exhaust Muffler;

1. Housing shall consist of a weather proof enclosure to completely enclose the engine generator and accessories. Housing shall protect the engine generator from the environment, yet be conductive to easy maintenance. Housing shall have removable swing out doors on each side and lockable rear door for access to meters and controls. Side doors shall have a means to pad lock. Construction of housing shall be aluminum and painted manufacturers standard color.

2. Exhaust muffler shall be mounted on top of housing. The exhaust muffler shall be a critical grade muffler. Muffler shall be factory installed so that its weight is not supported by the engine. A flexible exhaust fitting shall be supplied and installed between the muffler and exhaust manifold. All accessories shall be factory installed. This includes flanges, muffler, tail pipe and rain cap.

F. Automatic Starting System:

1. Starting Motor - A DC electric starting system with positive engagement shall be furnished. The motor voltage shall be as recommended by the engine manufacturer.

2. Automatic Control - fully automatic generator set start-stop controls in the generator control panel shall be provided. Controls shall provide shutdown for low oil pressure, high water temperature, over speed, over crank. Controls shall include a 30 second single cranking cycle limit with lockout.

3. Jacket Water Heater - A unit mounted thermal circulation type water heater incorporating a thermostatic switch shall be furnished to maintain engine jacket water to 70 degrees F. the heater shall be 120 volt, single phase, 60 hertz. Provide pressure switch actuated by oil pressure to shut down heater when oil pressure reaches running pressure.

4. Battery Charging Alternator - A belt driven battery charging alternator rated 24 volts, 35 amp DC shall be provided with transistorized voltage regulator.

5. Batteries - A lead - acid storage battery set of the heavy duty diesel starting type shall be provided. Battery voltage shall be compatible with the starting system. The battery set shall be rated no less than 220 amp-hours. Necessary cables and clamps shall be provided.

6. Battery Racks - Battery racks shall be provided for each battery and shall conform to NEC 480 - 7 (a) (1). They shall be constructed of metal and so treated as to be resistant to deteriorating action by battery electrolyte. Further, construction shall be such that non-conducting insulation material directly supports the cells.

7. Battery Charger - A current limiting battery charger shall be furnished to automatically recharge batteries. Chargers shall float at 2.17 volts per cell. It shall include overload protection, silicon diode full wave rectifiers, voltage surge suppressor, DC ammeter, DC volt- meter, and fused AC input. AC input voltage shall be 120

volts, single phase. Amperage output shall be no less than 6 amperes.

G. Generator Control Panel:

1. Type - A generator mounted NEMA 3R type vibration isolated aluminum control panel shall be provided. Panel shall contain, but not be limited to, the following equipment:

a. Frequency meter, 3 ½ inch, dial type.
b. Voltmeter, 3 ½ inch, 2% accuracy.
c. Ammeter, 3 ½ inch, 2 % accuracy.
d. Ammeter - Voltmeter phase selector switch.
e. Automatic starting controls as specified.
f. Voltage level adjustment rheostat.
g. Dry contacts for remote alarm wired to terminal strips.
h. Individual fault indicator lights for low oil pressure, high water temperature, over speed, and over crank.
i. Three position function switch marked, RUN-STOP and REMOTE.
j. Running time meter, oil pressure, battery charging ammeter, and water temperature gauges.

H. Main Line Circuit Breaker:

1. Type A main line, molded case circuit breaker mounted upon and sized to the output of the generator shall be installed as a load circuit interrupting and protection device. It shall operate both manually for normal switching functions and automatically during overload and short circuit conditions.

2. The trip unit for each pole shall have elements providing inverse time delay during overload conditions and instantaneous magnetic tripping for short circuit protection. The circuit breaker shall meet standards established by Underwriters Laboratories National Electric Manufacturer's Association, and National Electrical Code.

I. Automatic Load Transfer Switch:

1. The amperage rating of the automatic load transfer switch shall be 225 amps. Transfer switches shall be Nema 4X wall mounted.

2. Automatic transfer switch shall be mechanically held on both the emergency and the normal side, and rated for continuous duty in an unventilated enclosure. The switches shall be double throw with the main contacts rigidly and mechanically interlocked to insure only two possible positions: Normal or Emergency. A manual operator must be provided to enable manual operation.

3. Rating and Performance: The automatic load transfer control shall be rated for continuous duty when enclosed in a non-ventilated NEMA 4X enclosure. It shall be rated for all classes of load including inductive and non-inductive at 600 volts and tungsten lamp load at 250 volts. The transfer switch portion of the control shall be designed, built, and tested to close on an inrush current up to and including twenty (20) times the continuous rating of the switch without welding or excessive burning of the contacts. The transfer switch shall be capable of switching load up to and including fifteen (15) times the continuous rating of the switch and capable of enduring six thousand (6000) cycles of operation, at rated current, at a rate of six (6) cycles per minute, without failure. One cycle shall consist of one complete opening and closure of both sets of contacts on an inrush current of ten (10) times the continuous rating of the switch.

4. Transfer switch shall be listed under U.L. 1008, and approved by Canadian Standards Association. Switches utilizing reversing contactor mechanisms as a means to transfer load are disallowed and will not be considered.

5. Accessories to transfer switches; All automatic load transfer switches shall include the following accessories:

    a. Engine starting contacts to provide for generator starting from each unit independent of the other.

    b. Full phase protection. Three phase relays shall be field adjustable, close differential type with 92-95% pickup and 82-85% drop out. Relays are to be connected across live lines.

    c. Test switch, to simulate a power outage.

d. Adjustable time delay on engine starting to over-ride momentary outages and nuisance voltage dips.

e. Adjustable time delay on transfer of load to emergency source. Adjustable time delay to open transfer switch contact to allow motor loads to decay.

f. Adjustable time delay on retransfer to load to normal with 5 minute cool-down timer wherein the generator set runs unloaded after transfer to line.

g. Plant exerciser to start and run the generator set with or without load each 168 hours for a 30 minute interval. Selector switch will be provided for with load or without load testing.

h. One auxiliary contact closed on emergency and one auxiliary contact open on emergency.

i. Pilot lights to indicate the normal and emergency position of the transfer switch.

j. Isolated (ungrounded neutral bar).

k. Disconnect plug.

l. Time delay neutral, programmed transition, or in phase monitor.

J. Annunciator Panel: A flush recessed panel shall be provided for remote mounting as shown on the drawings to give audible and visual warning of fault or alarm conditions in the generator set. Wiring and conduit shall be as required by the system manufacturer. The panel shall conform with the requirements of the National Electrical Code, Section 700-12, and the National Fire Protection Associates publication, NFPA No. 110-3-5.5.1, Level One. Fuel tank leak detection status shall be indicated on the annunciator.

K. Transient voltage surge protection shall be provided protecting all low voltage circuits serving the transfer switch and the annunciator. EDCO or equal.

L. Provide one (1) remote emergency power off button. Provide Nema 4X enclosure for outdoor locations. Contractor to connect such to generator.

1.07 MANUFACTURING

A. The engine, including engine block, oil pan, and cylinder heads, generator and all major items of auxiliary equipment shall be manufactured in the U. S. by manufacturers currently engaged in the production of such equipment.

B. The unit shall be shipped to the job site by the manufacturer's authorized dealer having a parts and service facility within a 75 mile radius of the job site. In addition, and in order not to penalize the owner for unnecessary or prolonged periods of time for service or repairs to the emergency system, the bidding generator set supplier must have no less than eighty percent (80%) of all engine replacement parts in his stock at all times. Certified proof of this requirement shall be available from the dealer.

1.08 TESTING

A. Prior to acceptance of the installation, equipment shall be tested to show it is free of any defects and will start automatically and be subjected to full load test through the use of existing loads and, dry type load banks supplied for this purpose at the job site by the generator set supplier.

B. Load bank testing shall be done in the presence of the Owner's engineer or his appointed representative only after the unit is permanently installed in accordance with the plans and specifications. If testing is completed without benefit of Engineers presence, testing shall be done again in his presence. Testing shall be for a period of four (4) hours under full load.

C. Contractor shall supply all fuel necessary for load bank testing and shall before final acceptance of generator unit top off tank leaving it full.

1.09 CERTIFICATE TEST REPORTS, MANUALS AND INSTRUCTIONS

A. Prior to the final inspection, deliver 4 copies of the following items to the Engineer:

1. A certificate by the manufacturer of the engine-generator set that the auxiliary electrical power system has been properly installed, adjusted and tested.

2. Certified copies of all of the factory and construction site test data sheets and reports for the engine-generator set and major auxiliaries.

3. Complete operating and maintenance manuals for the engine-generator set and auxiliaries including wiring diagrams, technical data sheets and information for ordering replaceable parts:

   a. Include complete interconnection diagrams which indicate all components of the system.

   b. Include complete diagrams of the internal wiring for each of the items of equipment.

   c. The diagrams shall have their terminals identified to facilitate installation, operation and maintenance.

B. Laminate or mount under plexiglas a set of operating instructions for the system and install it under a neat frame, adjacent to transfer switch.

C. Provide signage, in accordance with section 26120, at main electrical service entrance equipment to indicate type and location of on-site emergency generator per N.E.C. 700.8(a).

D. Furnish the services of a competent, factory-trained engineer or technician for instructing operating and maintenance personnel on the proper operation and maintenance of the system at the time of testing.

1.10 SYSTEM SERVICE CONTRACT

A. The supplier of the standby power system shall provide a copy of and make available to the owner his standard service contract which, at the owner's option, may be accepted or refused. This contract will accompany any documents, drawings, catalog cuts, specification sheets,

wiring, or outline drawings, etc. Submitted for approval to the designing engineer. The contract shall be for the complete power system.

1.11 WARRANTY

A. The complete standby electrical system furnished under this Section shall be guaranteed against defective parts and workmanship under terms of the manufacturer's and dealer's standard warranty. But, in no event shall it be for a period of less than five (5) years or 3000 hours from date of final testing and acceptance of the system and shall include labor, parts and travel time for necessary repairs at the job site. Warranty information shall be submitted along with construction site test data sheets. This information shall list starting and ending dates and who is to be contacted for warranty service.

END OF SECTION

SECTION 260220
CONSTRUCTION REVIEWS INSPECTION AND TESTING

1.01 GENERAL

A. Comply with Division 1 - General Requirements.

1.02 CONSTRUCTION REVIEWS

A. The Engineer or his representative shall observe and review the installation of all electrical systems shown on the drawings and as specified herein.

B. Before covering or concealing any conduit below grade or slab, in wall or above ceiling, the contractor shall notify the Architect so that he can review the installation.

1.03 CONTRACTOR'S FINAL INSPECTION

A. At the time of the Contractor's final inspection, all systems shall be checked and tested for proper installation and operation by the Contractor in the presence of the Engineer or his representative.

B. The Contractor shall furnish the personnel, tools and equipment required to inspect and test all systems.

C. Following is a list of items that the contractor must demonstrate to the Architect or his representative as complying with the plans and specifications. Please note that this list does not necessarily represent all items to be covered in the final inspection, but should give the Contractor an idea of what is to be reviewed.

1. Service ground, show connection to ground rod and cold water main.

2. Demonstrate that main service equipment is properly bonded.

3. Demonstrate that all panels have breakers as specified, ground bar, copper bus, typed directory for circuit identification and that they are free of trash.

4. Demonstrate that all conduits are supported as required by the National Electrical Code.

5. Demonstrate that all outlet boxes above or on the ceiling are supported as required by the National Electrical Code.

6. Demonstrate that outlet boxes in wall or ceilings of combustible materials are flush with surface of wall or ceiling, and that outlet boxes in walls or ceilings of non-combustible materials are so installed that the front edge of the box or plaster ring is not set back more than 1/4".

7. Demonstrate that outlet boxes in wall are secure.

8. Demonstrate that all devices are properly secured to boxes, that device plates are properly aligned and are not being used to secure device.

9. Utilizing a Woodhead No. 1750 testing device, demonstrate that all 125 volt receptacles are properly connected.

10. Demonstrate that all fixtures have specified lamps, ballast and lens, and that they are supported as required by the National Electrical Code or as called for on the drawings or in the specifications.

11. Demonstrate that all disconnects requiring fuses are fused with the proper size and type, and that all disconnects are properly identified.

12. Demonstrate that Engine Generator Set is in proper working order and meeting all requirements outlined in specification.

13. Demonstrate that the Data/Voice Network Cabling System and SCADA/Controls System is in proper working order and meeting all requirements outlined in the specifications.

END OF SECTION

SECTION 260529
HANGERS AND SUPPORTS FOR ELECTRICAL SYSTEMS

PART 1 - GENERAL

1.1 SUMMARY

A. This Section includes the following:

1. Hangers and supports for electrical equipment and systems.
2. Construction requirements for concrete bases.

1.2 PERFORMANCE REQUIREMENTS

A. Design supports for multiple raceways capable of supporting combined weight of supported systems and its contents.

B. Design equipment supports capable of supporting combined operating weight of supported equipment and connected systems and components.

1.3 SUBMITTALS

A. Product Data: For each type of product including but not limited to:

1. Trapeze hangers. Include Product Data for components.
2. Steel slotted channel systems. Include Product Data for components.
3. Equipment supports.
4. Clamps.
5. Hangers.
6. Fasteners.
7. Anchors.
8. Brackets.

1.4 QUALITY ASSURANCE

A. Comply with NFPA 70.

1.5 COORDINATION

A. Coordinate size and location of concrete bases. Cast anchor-bolt inserts into bases. Concrete, reinforcement, and formwork requirements are specified in Division 3.

B. Coordinate installation of roof curbs, equipment supports, and roof penetrations.

PART 2 - PRODUCTS

2.1 SUPPORT, ANCHORAGE, AND ATTACHMENT COMPONENTS

A. Steel Slotted Support Systems: Comply with MFMA-4, factory-fabricated components for field assembly.

1. Manufacturers: Subject to compliance with requirements, provide products by one of the following:

a. Allied Tube & Conduit.
b. Cooper B-Line, Inc.; a division of Cooper Industries.
c. ERICO International Corporation.
d. GS Metals Corp.
e. Thomas & Betts Corporation.
f. Unistrut; Tyco International, Ltd.
g. Wesanco, Inc.

2. Painted Coatings: Manufacturer standard painted coating applied according to MFMA-4.
3. Channel Dimensions: Selected for applicable load criteria.

B. Raceway and Cable Supports: As described in NECA 1 and NECA 101.

C. Conduit and Cable Support Devices: Hangers, clamps, and associated fittings, designed for types and sizes of raceway or cable to be supported.

D. Support for Conductors in Vertical Conduit: Factory-fabricated assembly consisting of threaded body and insulating wedging plug or plugs for non-armored electrical conductors or cables in riser conduits. Plugs shall have number, size, and shape of conductor gripping pieces as required to suit individual conductors or cables supported. Body shall be malleable iron.

E. Structural Steel for Fabricated Supports and Restraints: ASTM A 36/A 36M, steel plates, shapes, and bars; black and galvanized.

F. Mounting, Anchoring, and Attachment Components: Items for fastening electrical items or their supports to building surfaces include the following:

1. Mechanical-Expansion Anchors: Insert-wedge-type, zinc-coated steel, for use in hardened portland cement concrete with tension, shear, and pullout capacities appropriate for supported loads and building materials in which used.

a. Manufacturers: Subject to compliance with requirements, provide products by one of the following:

1) Cooper B-Line, Inc.; a division of Cooper Industries.
2) Empire Tool and Manufacturing Co., Inc.
3) Hilti Inc.
4) ITW Ramset/Red Head; a division of Illinois Tool Works, Inc.
5) MKT Fastening, LLC.

2. Concrete Inserts: Steel or malleable-iron, slotted support system units similar to MSS Type 18; complying with MFMA-4 or MSS SP-58.
3. Clamps for Attachment to Steel Structural Elements: MSS SP-58, type suitable for attached structural element.
4. Through Bolts: Structural type, hex head, and high strength. Comply with ASTM A 325.
5. Toggle Bolts: All-steel springhead type.
6. Hanger Rods: Threaded steel.

2.2 FABRICATED METAL EQUIPMENT SUPPORT ASSEMBLIES

A. Description: Welded or bolted, structural-steel shapes, shop or field fabricated to fit dimensions of supported equipment.

B. Materials: Comply with requirements in Division 5 Section "Metal Fabrications" for steel shapes and plates.

PART 3 - EXECUTION

3.1 APPLICATION

A. Comply with NECA 1 and NECA 101 for application of hangers and supports for electrical equipment and systems except if requirements in this Section are stricter.

B. Maximum Support Spacing and Minimum Hanger Rod Size for Raceway: Space supports for EMT, and RMC as required by NFPA 70. Minimum rod size shall be 1/4 inch in diameter.

C. All hanger and support materials shall be suitable for the environment in which installed.

D. Multiple Raceways or Cables: Install trapeze-type supports fabricated with steel slotted support system, sized so capacity can be increased by at least 25 percent in future without exceeding specified design load limits.

1. Secure raceways and cables to these supports with single-bolt conduit clamps.

3.2 SUPPORT INSTALLATION

A. Comply with NECA 1 and NECA 101 for installation requirements except as specified in this Article.

B. Raceway Support Methods: In addition to methods described in NECA 1, EMT and RMC may be supported by openings through structure members, as permitted in NFPA 70.

C. Strength of Support Assemblies: Where not indicated, select sizes of components so strength will be adequate to carry present and future static loads within specified loading limits. Minimum static design load used for strength determination shall be weight of supported components plus 200 lb

D. Mounting and Anchorage of Surface-Mounted Equipment and Components: Anchor and fasten electrical items and their supports to building structural elements by the following methods unless otherwise indicated by code:

1. To Wood: Fasten with lag screws or through bolts.
2. To New Concrete: Bolt to concrete inserts.
3. To Masonry: Approved toggle-type bolts on hollow masonry units and expansion anchor fasteners on solid masonry units.
4. To Existing Concrete: Expansion anchor fasteners.
5. To Steel: Beam clamps (MSS Type 19, 21, 23, 25, or 27) complying with MSS SP-69 .
6. To Light Steel: Sheet metal screws.
7. Items Mounted on Hollow Walls and Nonstructural Building Surfaces: Mount cabinets, panelboards, disconnect switches, control enclosures, pull and junction boxes, transformers, and other devices on slotted-channel racks attached to substrate by means that meet anchorage requirements.

E. Drill holes for expansion anchors in concrete at locations and to depths that avoid reinforcing bars.

3.3 INSTALLATION OF FABRICATED METAL SUPPORTS

A. Comply with installation requirements in Division 5 Section "Metal Fabrications" for site-fabricated metal supports.

B. Cut, fit, and place miscellaneous metal supports accurately in location, alignment, and elevation to support and anchor electrical materials and equipment.

C. Field Welding: Comply with AWS D1.1/D1.1M.

3.4 CONCRETE BASES

A. Construct concrete bases of dimensions indicated but not less than 6 inches larger in both directions than supported unit, and so anchors will be a minimum of 10 bolt diameters from edge of the base.

B. Use 3000-psi 28-day compressive-strength concrete.

C. Anchor equipment to concrete base.

1. Place and secure anchorage devices. Use supported equipment manufacturer's setting drawings, templates, diagrams, instructions, and directions furnished with items to be embedded.
2. Install anchor bolts to elevations required for proper attachment to supported equipment.
3. Install anchor bolts according to anchor-bolt manufacturer's written instructions.

3.5 PAINTING

A. Touchup: Clean field welds and abraded areas of shop paint. Paint exposed areas immediately after erecting hangers and supports. Use same materials as used for shop painting. Comply with SSPC-PA 1 requirements for touching up field-painted surfaces.

1. Apply paint by brush or spray to provide minimum dry film thickness of 2.0 mils

END OF SECTION

SECTION 260544
SLEEVES AND SLEEVE SEALS FOR ELECTRICAL RACEWAYS AND CABLING

PART 1 - GENERAL

1.1 SUMMARY

A. Section Includes:

1. Sleeves for raceway and cable penetration of non-fire-rated construction walls and floors.
2. Grout.

B. Related Requirements:

1. Division 7 Section "Through-Penetration Firestop Systems" for penetration firestopping installed in fire-resistance-rated walls, horizontal assemblies, and smoke barriers, with and without penetrating items.

PART 2 - PRODUCTS

2.1 SLEEVES

A. Wall Sleeves:

1. Steel Pipe Sleeves: ASTM A 53/A 53M, Type E, Grade B, Schedule 40, zinc coated, plain ends.
2. Cast-Iron Pipe Sleeves: Cast or fabricated "wall pipe," equivalent to ductile-iron pressure pipe, with plain ends and integral waterstop unless otherwise indicated.

B. Sleeves for Conduits Penetrating Non-Fire-Rated Gypsum Board Assemblies: Galvanized-steel sheet; 0.0239-inch minimum thickness; round tube closed with welded longitudinal joint, with tabs for screw-fastening the sleeve to the board.

C. Sleeves for Rectangular Openings:

1. Material: Galvanized sheet steel.
2. Minimum Metal Thickness:

a. For sleeve cross-section rectangle perimeter less than 50 inches and with no side larger than 16 inches, thickness shall be 0.052 inch.

b. For sleeve cross-section rectangle perimeter 50 inches or more and one or more sides larger than 16 inches, thickness shall be 0.138 inch.

2.2 GROUT

A. Description: Nonshrink; recommended for interior and exterior sealing openings in non-fire-rated walls or floors.

B. Standard: ASTM C 1107/C 1107M, Grade B, post-hardening and volume-adjusting, dry, hydraulic-cement grout.

C. Design Mix: 5000-psi, 28-day compressive strength.

D. Packaging: Premixed and factory packaged.

PART 3 - EXECUTION

3.1 SLEEVE INSTALLATION FOR NON-FIRE-RATED ELECTRICAL PENETRATIONS

A. Comply with NECA 1.

B. Comply with NEMA VE 2 for cable tray and cable penetrations.

C. Sleeves for Conduits Penetrating Above-Grade Non-Fire-Rated Concrete and Masonry-Unit Floors and Walls:

1. Interior Penetrations of Non-Fire-Rated Walls and Floors:

a. Seal annular space between sleeve and raceway or cable, using joint sealant appropriate for size, depth, and location of joint. Comply with requirements in Division 7 Section "Joint Sealants."
b. Seal space outside of sleeves with mortar or grout. Pack sealing material solidly between sleeve and wall so no voids remain. Tool exposed surfaces smooth; protect material while curing.

2. Use pipe sleeves unless penetration arrangement requires rectangular sleeved opening.
3. Size pipe sleeves to provide 1/4-inch annular clear space between sleeve and raceway or cable unless sleeve seal is to be installed.
4. Install sleeves for wall penetrations unless core-drilled holes or formed openings are used. Install sleeves during erection of walls. Cut sleeves to length for mounting flush with both surfaces of walls. Deburr after cutting.

D. Sleeves for Conduits Penetrating Non-Fire-Rated Gypsum Board Assemblies:

1. Use circular metal sleeves unless penetration arrangement requires rectangular sleeved opening.
2. Seal space outside of sleeves with approved joint compound for gypsum board assemblies.

E. Roof-Penetration Sleeves: Seal penetration of individual raceways and cables with flexible boot-type flashing units applied in coordination with roofing work.

F. Aboveground, Exterior-Wall Penetrations: Seal penetrations using pipe sleeves and mechanical sleeve seals. Select sleeve size to allow for 1-inch annular clear space between pipe and sleeve for installing mechanical sleeve seals.

G. Underground, Exterior-Wall and Floor Penetrations: Install cast-iron pipe sleeves. Size sleeves to allow for 1-inch annular clear space between raceway or cable and sleeve for installing sleeve-seal system.

END OF SECTION

SECTION 260573
OVERCURRENT PROTECTIVE DEVICE COORDINATION STUDY

PART 1 - GENERAL

1.1 SUMMARY

A. Section includes computer-based, overcurrent protective device coordination studies to determine overcurrent protective devices and to determine overcurrent protective device settings for selective tripping.

1. Study results shall be used to determine coordination of series-rated devices.

1.2 ACTION SUBMITTALS

A. Product Data: For computer software program to be used for studies.

B. Other Action Submittals: Submit the following after the approval of system protective devices submittals.

1. Coordination-study input data, including completed computer program input data sheets.
2. Study and equipment evaluation reports.
3. Overcurrent protective device coordination study report; signed, dated, and sealed by a qualified professional engineer.

a. Submit study report for action prior to receiving final approval of the distribution equipment submittals. If formal completion of studies will cause delay in equipment manufacturing, obtain approval from Architect for preliminary submittal of sufficient study data to ensure that the selection of devices and associated characteristics is satisfactory.

1.3 INFORMATIONAL SUBMITTALS

A. Qualification Data: For Coordination Study Software Developer and Coordination Study Specialist.

B. Product Certificates: For overcurrent protective device coordination study software, certifying compliance with IEEE 399.

1.4 CLOSEOUT SUBMITTALS

A. Operation and Maintenance Data: For the overcurrent protective devices to include in emergency, operation, and maintenance manuals.

1. In addition to items specified in Section "Operation and Maintenance Data," include the following:

a. The following parts from the Protective Device Coordination Study Report:

1) One-line diagram.
2) Protective device coordination study.
3) Time-current coordination curves.

b. Power system data.

1.5 QUALITY ASSURANCE

A. Studies shall use computer programs that are distributed nationally and are in wide use. Software algorithms shall comply with requirements of standards and guides specified in this Section. Manual calculations are unacceptable.

B. Coordination Study Software Developer Qualifications: An entity that owns and markets computer software used for studies, having performed successful studies of similar magnitude on electrical distribution systems using similar devices.

1. The computer program shall be developed under the charge of a licensed professional engineer who holds IEEE Computer Society's Certified Software Development Professional certification.

C. Coordination Study Specialist Qualifications: Professional engineer in charge of performing the study and documenting recommendations, licensed in the state where Project is located. All elements of the study shall be performed under the direct supervision and control of this professional engineer.

D. Field Adjusting Agency Qualifications: An independent agency, with the experience and capability to adjust overcurrent devices and to conduct the testing indicated, that is a member company of the InterNational Electrical Testing Association or is a nationally recognized testing laboratory (NRTL) as defined by OSHA in 29 CFR 1910.7, and that is acceptable to authorities having jurisdiction.

PART 2 - PRODUCTS

2.1 COMPUTER SOFTWARE DEVELOPERS

A. Software Developers: Subject to compliance with requirements, available software developers offering software that may be used for the Work include, but are not limited to, the following:
   1. ETAP
   2. SKM Systems Analysis, Inc.

B. Comply with IEEE 242 and IEEE 399.

C. Analytical features of device coordination study computer software program shall have the capability to calculate "mandatory," "very desirable," and "desirable" features as listed in IEEE 399.

D. Computer software program shall be capable of plotting and diagramming time-current-characteristic curves as part of its output. Computer software program shall report device settings and ratings of all overcurrent protective devices and shall demonstrate selective coordination by computer-generated, time-current coordination plots.

   1. Optional Features:

      a. Arcing faults.
      b. Simultaneous faults.
      c. Explicit negative sequence.
      d. Mutual coupling in zero sequence.

2.2 PROTECTIVE DEVICE COORDINATION STUDY REPORT CONTENTS

A. Executive summary.

B. Study descriptions, purpose, basis and scope. Include case descriptions, definition of terms and guide for interpretation of the computer printout.

C. One-line diagram, showing the following:

   1. Protective device designations and ampere ratings.
   2. Cable size and lengths.
   3. Transformer kilovolt ampere (kVA) and voltage ratings.
   4. Motor and generator designations and kVA ratings.

5. Switchgear, switchboard, motor-control center, and panelboard designations.

D. Study Input Data: As described in "Power System Data" Article.

E. Short-Circuit Study:

1. Low-Voltage Fault Report: Three-phase and unbalanced fault calculations, showing the following for each overcurrent device location:

a. Voltage.
b. Calculated fault-current magnitude and angle.
c. Fault-point X/R ratio.
d. Equivalent impedance.

2. Momentary Duty Report: Three-phase and unbalanced fault calculations, showing the following for each overcurrent device location:

a. Voltage.
b. Calculated symmetrical fault-current magnitude and angle.
c. Fault-point X/R ratio.
d. Calculated asymmetrical fault currents:

1) Based on fault-point X/R ratio.
2) Based on calculated symmetrical value multiplied by 1.6.
3) Based on calculated symmetrical value multiplied by 2.7.

3. Interrupting Duty Report: Three-phase and unbalanced fault calculations, showing the following for each overcurrent device location:

a. Voltage.
b. Calculated symmetrical fault-current magnitude and angle.
c. Fault-point X/R ratio.
d. No AC Decrement (NACD) ratio.
e. Equivalent impedance.
f. Multiplying factors for 2-, 3-, 5-, and 8-cycle circuit breakers rated on a symmetrical basis.
g. Multiplying factors for 2-, 3-, 5-, and 8-cycle circuit breakers rated on a total basis.

F. Protective Device Coordination Study:

1. Report recommended settings of protective devices, ready to be applied in the field. Use manufacturer's data sheets for recording the recommended setting of overcurrent protective devices when available.

a. Phase and Ground Relays:

1) Device tag.
2) Relay current transformer ratio and tap, time dial, and instantaneous pickup value.
3) Recommendations on improved relaying systems, if applicable.

b. Circuit Breakers:

1) Adjustable pickups and time delays (long time, short time, ground).
2) Adjustable time-current characteristic.
3) Adjustable instantaneous pickup.
4) Recommendations on improved trip systems, if applicable.

c. Fuses: Show current rating, voltage, and class.

G. Time-Current Coordination Curves: Determine settings of overcurrent protective devices to achieve selective coordination. Graphically illustrate that adequate time separation exists between devices installed in series, including power utility company's upstream devices. Prepare separate sets of curves for the switching schemes and for emergency periods where the power source is local generation. Show the following information:

1. Device tag and title, one-line diagram with legend identifying the portion of the system covered.
2. Terminate device characteristic curves at a point reflecting maximum symmetrical or asymmetrical fault current to which the device is exposed.
3. Identify the device associated with each curve by manufacturer type, function, and, if applicable, tap, time delay, and instantaneous settings recommended.
4. Plot the following listed characteristic curves, as applicable:

a. Power utility's overcurrent protective device.
b. Medium-voltage equipment overcurrent relays.
c. Medium- and low-voltage fuses including manufacturer's minimum melt, total clearing, tolerance, and damage bands.
d. Low-voltage equipment circuit-breaker trip devices, including manufacturer's tolerance bands.
e. Transformer full-load current, magnetizing inrush current, and ANSI through-fault protection curves.
f. Cables and conductors damage curves.
g. Ground-fault protective devices.
h. Motor-starting characteristics and motor damage points.
i. Generator short-circuit decrement curve and generator damage point.

j. The largest feeder circuit breaker in each motor-control center and panelboard.

5. Series rating on equipment allows the application of two series interrupting devices for a condition where the available fault current is greater than the interrupting rating of the downstream equipment. Both devices share in the interruption of the fault and selectivity is sacrificed at high fault levels. Maintain selectivity for tripping currents caused by overloads.
6. Provide adequate time margins between device characteristics such that selective operation is achieved.
7. Comments and recommendations for system improvements.

PART 3 - EXECUTION

3.1 EXAMINATION

A. Examine Project overcurrent protective device submittals for compliance with electrical distribution system coordination requirements and other conditions affecting performance. Devices to be coordinated are indicated on Drawings.

1. Proceed with coordination study only after relevant equipment submittals have been assembled. Overcurrent protective devices that have not been submitted and approved prior to coordination study may not be used in study.

3.2 PROTECTIVE DEVICE COORDINATION STUDY

A. Comply with IEEE 242 for calculating short-circuit currents and determining coordination time intervals.

B. Comply with IEEE 399 for general study procedures.

C. The study shall be based on the device characteristics supplied by device manufacturer.

D. The extent of the electrical power system to be studied is indicated on Drawings.

E. Begin analysis at the service, extending down to the system overcurrent protective devices as follows:

1. To normal system low-voltage load buses where fault current is 10 kA or less.
2. Exclude equipment rated 240-V ac or less when supplied by a single transformer rated less than 125 kVA.

F. Study electrical distribution system from normal and alternate power sources throughout electrical distribution system for Project. Study all cases of system-switching configurations and alternate operations that could result in maximum fault conditions.

G. Transformer Primary Overcurrent Protective Devices:

1. Device shall not operate in response to the following:

a. Inrush current when first energized.
b. Self-cooled, full-load current or forced-air-cooled, full-load current, whichever is specified for that transformer.
c. Permissible transformer overloads according to IEEE C57.96 if required by unusual loading or emergency conditions.

2. Device settings shall protect transformers according to IEEE C57.12.00, for fault currents.

H. Motor Protection:

1. Select protection for low-voltage motors according to IEEE 242 and NFPA 70.
2. Select protection for motors served at voltages more than 600 V according to IEEE 620.

I. Conductor Protection: Protect cables against damage from fault currents according to ICEA P-32-382, ICEA P-45-482, and protection recommendations in IEEE 242. Demonstrate that equipment withstands the maximum short-circuit current for a time equivalent to the tripping time of the primary relay protection or total clearing time of the fuse. To determine temperatures that damage insulation, use curves from cable manufacturers or from listed standards indicating conductor size and short-circuit current.

J. Generator Protection: Select protection according to manufacturer's written recommendations and to IEEE 242.

K. The calculations shall include the ac fault-current decay from induction motors, synchronous motors, and asynchronous generators and shall apply to low- and medium-voltage, three-phase ac systems. The calculations shall also account for the fault-current dc decrement, to address the asymmetrical requirements of the interrupting equipment.

1. For grounded systems, provide a bolted line-to-ground fault-current study for areas as defined for the three-phase bolted fault short-circuit study.

L. Calculate short-circuit momentary and interrupting duties for a three-phase bolted fault and single line-to-ground fault at each of the following:

1. Electric utility's supply termination point.
2. Switchgear.
3. Unit substation primary and secondary terminals.
4. Low-voltage switchgear.
5. Motor-control centers.
6. Standby generators and automatic transfer switches.
7. Branch circuit panelboards.

M. Protective Device Evaluation:

1. Evaluate equipment and protective devices and compare to short-circuit ratings.
2. Adequacy of switchgear, motor-control centers, and panelboard bus bars to withstand short-circuit stresses.
3. Any application of series-rated devices shall be recertified, complying with requirements in NFPA 70.

3.3 LOAD-FLOW AND VOLTAGE-DROP STUDY

A. Perform a load-flow and voltage-drop study to determine the steady-state loading profile of the system. Analyze power system performance two times as follows:

1. Determine load-flow and voltage drop based on full-load currents obtained in "Power System Data" Article.
2. Determine load-flow and voltage drop based on 80 percent of the design capacity of the load buses.
3. Prepare the load-flow and voltage-drop analysis and report to show power system components that are overloaded, or might become overloaded; show bus voltages that are less than as prescribed by NFPA 70.

3.4 MOTOR-STARTING STUDY

A. Perform a motor-starting study to analyze the transient effect of the system's voltage profile during motor starting. Calculate significant motor-starting voltage profiles and analyze the effects of the motor starting on the power system stability.

B. Prepare the motor-starting study report, noting light flicker for limits proposed by IEEE 141, and voltage sags so as not to affect the operation of other utilization equipment on the system supplying the motor.

3.5 POWER SYSTEM DATA

A. Obtain all data necessary for the conduct of the overcurrent protective device study.

1. Verify completeness of data supplied in the one-line diagram on Drawings. Call discrepancies to the attention of Architect.
2. For new equipment, use characteristics submitted under the provisions of action submittals and information submittals for this Project.
3. For existing equipment, whether or not relocated obtain required electrical distribution system data by field investigation and surveys, conducted by qualified technicians and engineers. The qualifications of technicians and engineers shall be qualified as defined by NFPA 70E.

B. Gather and tabulate the following input data to support coordination study. The list below is a guide. Comply with recommendations in IEEE 241 and IEEE 551 for the amount of detail required to be acquired in the field. Field data gathering shall be under the direct supervision and control of the engineer in charge of performing the study, and shall be by the engineer or its representative who holds NETA ETT Level III certification or NICET Electrical Power Testing Level III certification.

1. Product Data for overcurrent protective devices specified in other Sections and involved in overcurrent protective device coordination studies. Use equipment designation tags that are consistent with electrical distribution system diagrams, overcurrent protective device submittals, input and output data, and recommended device settings.
2. Electrical power utility impedance at the service.
3. Power sources and ties.
4. Short-circuit current at each system bus, three phase and line-to-ground.
5. Full-load current of all loads.
6. Voltage level at each bus.
7. For transformers, include kVA, primary and secondary voltages, connection type, impedance, X/R ratio, taps measured in percent, and phase shift.
8. For reactors, provide manufacturer and model designation, voltage rating, and impedance.
9. For circuit breakers and fuses, provide manufacturer and model designation. List type of breaker, type of trip and available range of settings, SCCR, current rating, and breaker settings.
10. Generator short-circuit current contribution data, including short-circuit reactance, rated kVA, rated voltage, and X/R ratio.
11. For relays, provide manufacturer and model designation, current transformer ratios, potential transformer ratios, and relay settings.
12. Maximum demands from service meters.

13. Busway manufacturer and model designation, current rating, impedance, lengths, and conductor material.
14. Motor horsepower and NEMA MG 1 code letter designation.
15. Low-voltage cable sizes, lengths, number, conductor material, and conduit material (magnetic or nonmagnetic).
16. Medium-voltage cable sizes, lengths, conductor material, and cable construction and metallic shield performance parameters.
17. Data sheets to supplement electrical distribution system diagram, cross-referenced with tag numbers on diagram, showing the following:

    a. Special load considerations, including starting inrush currents and frequent starting and stopping.
    b. Transformer characteristics, including primary protective device, magnetic inrush current, and overload capability.
    c. Motor full-load current, locked rotor current, service factor, starting time, type of start, and thermal-damage curve.
    d. Generator thermal-damage curve.
    e. Ratings, types, and settings of utility company's overcurrent protective devices.
    f. Special overcurrent protective device settings or types stipulated by utility company.
    g. Time-current-characteristic curves of devices indicated to be coordinated.
    h. Manufacturer, frame size, interrupting rating in amperes rms symmetrical, ampere or current sensor rating, long-time adjustment range, short-time adjustment range, and instantaneous adjustment range for circuit breakers.
    i. Manufacturer and type, ampere-tap adjustment range, time-delay adjustment range, instantaneous attachment adjustment range, and current transformer ratio for overcurrent relays.
    j. Panelboards, switchboards, motor-control center ampacity, and SCCR in amperes rms symmetrical.
    k. Identify series-rated interrupting devices for a condition where the available fault current is greater than the interrupting rating of the downstream equipment. Obtain device data details to allow verification that series application of these devices complies with NFPA 70 and UL 489 requirements.

3.6 FIELD ADJUSTING

A. Adjust relay and protective device settings according to the recommended settings provided by the coordination study. Field adjustments shall be completed by the engineering service division of the equipment manufacturer under the Startup and Acceptance Testing contract portion.

B. Make minor modifications to equipment as required to accomplish compliance with short-circuit and protective device coordination studies.

C. Testing and adjusting shall be by a full-time employee of the Field Adjusting Agency, who holds NETA ETT Level III certification or NICET Electrical Power Testing Level III certification.

1. Perform each visual and mechanical inspection and electrical test stated in NETA Acceptance Testing Specification. Certify compliance with test parameters. Perform NETA tests and inspections for all adjustable overcurrent protective devices.

3.7 DEMONSTRATION

A. Engage the Coordination Study Specialist to train Owner's maintenance personnel in the following:

1. Acquaint personnel in the fundamentals of operating the power system in normal and emergency modes.
2. Hand-out and explain the objectives of the coordination study, study descriptions, purpose, basis, and scope. Include case descriptions, definition of terms, and guide for interpreting the time-current coordination curves.
3. Adjust, operate, and maintain overcurrent protective device settings.

END OF SECTION

SECTION 262213
LOW-VOLTAGE DISTRIBUTION TRANSFORMERS

PART 1 - GENERAL

1.1 SUMMARY

A. Section Includes:

1. Distribution, dry-type transformers with nominal primary and secondary rating of 600 V and less, with capacities up to 1500 kVA.

1.2 ACTION SUBMITTALS

A. Product Data:

1. For each type of product.

a. Include construction details, material descriptions, dimensions of individual components and profiles, and finishes for each type and size of transformer.
b. Include rated nameplate data, capacities, weights, dimensions, minimum clearances, installed devices and features, and performance for each type and size of transformer.

B. Shop Drawings:

1. Detail equipment assemblies and indicate dimensions, weights, loads, required clearances, method of field assembly, components, and location and size of field connections.
2. Vibration Isolation Base Details: Detail fabrication including anchorages and attachments to structure and to supported equipment.
3. Include diagrams for power, signal, and control wiring.

C. Field Quality-Control Submittals:

1. Field quality-control reports.

1.3 DELIVERY, STORAGE, AND HANDLING

A. Inspection: On receipt, inspect for and note shipping damage to packaging and transformer.

1. If manufacturer packaging is removed for inspection, and transformer will be stored after inspection, re-package transformer using original or new packaging materials that provide protection equivalent to manufacturer's packaging.

B. Storage: Store in warm, dry, and temperature-stable location in original shipping packaging.

C. Temporary Heating: Apply temporary heat in accordance with manufacturer's published instructions within enclosure of ventilated-type units, throughout periods during which equipment is not energized and when transformer is not in space that is continuously under normal control of temperature and humidity.

D. Handling: Follow manufacturer's instructions for lifting and transporting transformers.

PART 2 - PRODUCTS

2.1 MANUFACTURERS

A. Manufacturers: Subject to compliance with requirements, provide products by the following:
1. Square D; Schneider Electric USA.

B. Source Limitations: Obtain each type of transformer from single source from single manufacturer.

2.2 GENERAL TRANSFORMER REQUIREMENTS

A. Description: Factory-assembled and -tested, air-cooled units for 60 Hz service.

B. Electrical Components, Devices, and Accessories: Listed and labeled in accordance with NFPA 70, by qualified electrical testing laboratory recognized by authorities having jurisdiction, and marked for intended location and application.

C. Transformers Rated 15 kVA and Larger:

1. Comply with 10 CFR 431 (DOE 2016) efficiency levels.

2. Marked as compliant with DOE 2016 efficiency levels by qualified electrical testing laboratory recognized by authorities having jurisdiction.

2.3 DISTRIBUTION TRANSFORMERS

A. Comply with NFPA 70, and list and label as complying with UL 1561.

B. Cores: Electrical grade, non-aging silicon steel with high permeability and low hysteresis losses.

1. One leg per phase.
2. Core volume must allow efficient transformer operation at 10 percent above nominal tap voltage.
3. Grounded to enclosure.

C. Coils: Continuous windings without splices except for taps.

1. Coil Material: Aluminum.
2. Internal Coil Connections: Brazed or pressure type.
3. Terminal Connections: Bolted.

D. Encapsulation: Transformers smaller than 30 kVA must have core and coils completely resin encapsulated.

E. Enclosure: Ventilated.

1. Core and coil must be encapsulated within resin compound using vacuum-pressure impregnation process to seal out moisture and air.
2. KVA Ratings: Based on convection cooling only and not relying on auxiliary fans.
3. Wiring Compartment: Sized for conduit entry and wiring installation.
4. Environmental Protection:

    a. Indoor: UL 50E, Type 2.
    b. Outdoor: UL 50E, Type 3R.

5. Finish Color: Gray weather-resistant enamel.

F. Taps for Transformers 3 kVA and Smaller: None.

G. Taps for Transformers 7.5 to 24 kVA: One 5 percent tap above and one 5 percent tap below normal full capacity.

H. Taps for Transformers 25 kVA and Larger: Two 2.5 percent taps above and two 2.5 percent taps below normal full capacity.

I. Insulation Class, Smaller Than 30 kVA: 180 deg C, UL-component-recognized insulation system with maximum of 115 deg C rise above 40 deg C ambient temperature.

J. Insulation Class, 30 kVA and Larger: 220 deg C, UL-component-recognized insulation system with maximum of 150 deg C rise above 40 deg C ambient temperature.

K. Grounding: Provide ground-bar kit or ground bar installed on inside of transformer enclosure.

L. K-Factor Rating: Transformers indicated to be K-factor rated must comply with UL 1561 requirements for nonsinusoidal load current-handling capability to degree defined by designated K-factor.

1. Unit may not overheat when carrying full-load current with harmonic distortion corresponding to designated K-factor, without exceeding indicated insulation class in 40 deg C maximum ambient and 24-hour average ambient of 30 deg C.
2. Indicate value of K-factor on transformer nameplate.
3. Unit must comply with requirements of DOE 2016 efficiency levels when tested in accordance with NEMA TP 2 with K-factor equal to one.

M. Electrostatic Shielding: Windings must have independent, single, full-width copper electrostatic shield arranged to minimize interwinding capacitance.

1. Arrange coil leads and terminal strips to minimize capacitive coupling between input and output terminals.
2. Include special terminal for grounding shield.

N. Neutral: Rated 200 percent of full load current for K-factor-rated transformers.

O. Wall Brackets: Manufacturer's standard brackets.

P. Low-Sound-Level Requirements: Maximum sound levels when factory tested in accordance with IEEE C57.12.91, as follows:

1. 9.00 kVA and Less: 40 dB(A-weighted).
2. 9.01 to 30.00 kVA: 45 dB(A-weighted).
3. 30.01 to 50.00 kVA: 45 dB(A-weighted) for K-factors of 1, 4, and 9.
4. 50.01 to 150.00 kVA: 50 dB(A-weighted) for K-factors of 1, 4, and 9.

2.4 IDENTIFICATION

A. Nameplates:

1. Engraved, laminated-acrylic or melamine plastic signs for distribution transformers, mounted with corrosion-resistant screws. Nameplates and label products are specified in Section 26 05 53 "Identification for Electrical Systems."

2.5 SOURCE QUALITY CONTROL

A. Testing Administrant: Engage qualified electrical testing agency to evaluate transformer.

B. Factory Tests and Inspections: Test and inspect assembled system, by, or under supervision of, qualified electrical testing laboratory recognized by authorities having jurisdiction, in accordance with IEEE C57.12.01 and IEEE C57.12.91 before delivering to site. Affix label with name and date of manufacturer's certification of system compliance on control units.

1. Resistance measurements of windings at rated voltage connections and at tap connections.
2. Ratio tests at rated voltage connections and at tap connections.
3. Phase relation and polarity tests at rated voltage connections.
4. No load losses, and excitation current and rated voltage at rated voltage connections.
5. Impedance and load losses at rated current and rated frequency at rated voltage connections.
6. Applied and induced tensile tests.
7. Regulation and efficiency at rated load and voltage.
8. Insulation-Resistance Tests:
    a. Line-side to ground.
    b. Load-side to ground.
    c. Line-side to load-side.
9. Temperature tests.
10. Factory Sound-Level Tests: Conduct sound-level tests on equipment for this Project.

C. Nonconforming Work:

1. System equipment that does not pass tests and inspections will be considered defective.

D. Prepare test and inspection reports.

PART 3 - EXECUTION

3.1 EXAMINATION

A. Examine conditions for compliance with enclosure- and ambient-temperature requirements for transformers.

B. Verify that field measurements are as needed to maintain working clearances required by NFPA 70 and manufacturer's published instructions.

C. Examine walls, floors, roofs, and concrete bases for suitable mounting conditions where transformers will be installed.

D. Verify that ground connections are in place and requirements in Section 26 05 26 "Grounding and Bonding for Electrical Systems" have been met. Maximum ground resistance must be 5 Ω at location of transformer.

E. Environment: Enclosures must be rated for environment in which they are located. Covers for UL 50E, Type 4X enclosures may not cause accessibility problems.

F. Proceed with installation only after unsatisfactory conditions have been corrected.

3.2 INSTALLATION

A. Install wall-mounted transformers level and plumb with wall brackets fabricated by transformer manufacturer.

1. Coordinate installation of wall-mounted and structure-hanging supports with actual transformer provided.

B. Construct concrete bases and anchor floor-mounted transformers in accordance with manufacturer's published instructions and requirements in Section 26 05 29 "Hangers and Supports for Electrical Systems."

1. Coordinate size and location of concrete bases with actual transformer provided. Cast anchor-bolt inserts into bases. Concrete, reinforcement, and formwork requirements are specified with concrete.

C. Secure transformer to concrete base in accordance with manufacturer's published instructions.

D. Secure covers to enclosure and tighten bolts to manufacturer-recommended torques to reduce noise generation.

E. Remove shipping bolts, blocking, and wedges.

3.3 CONNECTIONS

A. Ground equipment in accordance with Section 26 05 26 "Grounding and Bonding for Electrical Systems."

B. Connect wiring in accordance with Section 26 05 19 "Low-Voltage Electrical Power Conductors and Cables."

C. Tighten electrical connectors and terminals in accordance with manufacturer's published torque-tightening values. If manufacturer's torque values are not indicated, use those specified in UL 486A-486B.

D. Provide flexible connections at conduit and conductor terminations and supports to eliminate sound and vibration transmission to building structure.

3.4 FIELD QUALITY CONTROL

A. Field tests and inspections must be witnessed by Architect .

B. Tests and Inspections:

1. Small (Up to 167 kVA Single-Phase or 500 kVA Three-Phase) Dry-Type Transformer Field Tests:

a. Visual and Mechanical Inspection.

1) Inspect physical and mechanical condition.
2) Inspect anchorage, alignment, and grounding.
3) Verify that resilient mounts are free and that shipping brackets have been removed.
4) Verify that unit is clean.
5) Perform specific inspections and mechanical tests recommended by manufacturer.
6) Verify that as-left tap connections are as specified.
7) Verify presence of surge arresters and that their ratings are as specified.

b. Electrical Tests:

1) Measure resistance at windings, taps, and bolted connections.

2) Perform insulation-resistance tests winding-to-winding and windings-to-ground. Apply voltage in accordance with manufacturer's published data. In absence of manufacturer's published data, comply with NETA ATS, Table 100.5. Calculate polarization index: value of index may not be less than 1.0.
3) Perform turns-ratio tests at tap positions. Test results may not deviate by more than one-half percent from either adjacent coils or calculated ratio. If test fails, replace transformer.
4) Verify correct secondary voltage, phase-to-phase and phase-to-neutral, after energization and prior to loading.

C. Test Labeling: On completion of satisfactory testing of units, attach dated and signed "Satisfactory Test" label to tested components.

D. Nonconforming Work:

1. Transformer will be considered defective if it does not pass tests and inspections.
2. Remove and replace units that do not pass tests or inspections and retest as specified above.

E. Assemble and submit test and inspection reports.

F. Manufacturer Services:

1. Engage factory-authorized service representative to support field tests and inspections.

3.5 ADJUSTING

A. Record transformer secondary voltage at unit for at least 48 hours of typical occupancy period. Adjust transformer taps to provide optimum voltage conditions at secondary terminals. Optimum is defined as not exceeding nameplate voltage plus 5 percent and not being lower than nameplate voltage minus 3 percent at maximum load conditions. Submit recording and tap settings as test results.

B. Output Settings Report: Prepare written report recording output voltages and tap settings.

3.6 CLEANING

A. Vacuum dirt and debris; do not use compressed air to assist in cleaning.

3.7 MAINTENANCE

A. Infrared Scanning: Two months after Substantial Completion, perform infrared scan of transformer connections.

1. Use infrared-scanning device designed to measure temperature or detect significant deviations from normal values. Provide documentation of device calibration.
2. Perform two follow-up infrared scans of transformers, one at four months and another at 11 months after Substantial Completion.
3. Prepare certified report identifying transformer checked and describing results of scanning. Include notation of deficiencies detected, remedial actions taken, and scanning observations after remedial action.

END OF SECTION

*DISTURBED AREA CALCULATIONS:

PROJECT SITE: 2.14 AC
TOTAL DISTURBED AREA: 1.06 AC

DISTURBED AREA (OFF SITE): 0.14 AC
DISTURBED AREA (ON SITE): 0.92 AC
DISTURBED AREA = 0.92 AC / 2.14 AC = 43% OF PROJECT SITE
< 50% GOOD

IMPERVIOUS AREA = 1400 SF -> 0.032 AC / 1.06 AC = 3.0%

<50% GOOD
<15% GOOD

PR. DIG PIT
EX. 6" PVC WATER LINE (OWNED BY CITY OF GAINESVILLE)
CUT, CAP, & ABANDON EX. 2" WATER LINE IN PLACE GDOT APPROVAL #U-139-012970-1
STATE ROUTE 13 (100' RIGHT-OF-WAY)
PR. LAUNCHING PIT
EX. 2" PVC WATER LINE (OWNED BY CITY OF FLOWERY BRANCH)
CONNECT TO EX. LINE W/ 2" TAPPING SLEEVE, 2"x4" RJ DI REDUCER, 4" RJ DI BENDS, & 4" GATE VALVE W/ BOX & COVER
4" RJ DIP WATER MAIN INSTALLED VIA HORIZONTAL DIRECTIONAL DRILL GDOT APPROVAL #U-139-012970-1
STATE ROUTE 13 (100' RIGHT-OF-WAY)
EX. 6" HIGH PRESSURE STL. GAS MAIN
8" RJ DI 90° BEND
OPEN CUT PAVEMENT (SEE PAVEMENT PATCH DETAIL ON SHEET 9.0)
POTHOLE AND VERIFY IF EX. WATER LINE IS ACTIVE
4" RJ DI 45° BEND
PR. RECEIVING PIT
EX. 10" RECLAIM WATER
RAILROAD AVENUE
MATCHLINE - SEE SHEET 4.1
PR. FIRE HYDRANT ASSEMBLY (INCL. 8"x6" RJ DI TEE, 6" RJ GATE VALVE, & 6" RJ DI LEAD PIPE)
EX. FIBER OPTIC LINE
EX. 1.25" GAS LINE
10' LANDSCAPING BUFFER
CONTRACTOR SHALL RUN/STUB-OUT 2.5" PVC CONDUIT FROM EX. POWER POLE TO PR. METERING POINT AT BLDG.
COORDINATE WITH GA POWER TO RELOCATE EX. GUY WIRES
EX. 2" WATER
PR. DIG PIT
8" RJ DI 45° BEND
PR. 4" DIP
HENDERSON WELL
PR. DIESEL GENERATOR ON CONC. SLAB PER DETAIL (SEE SHEET C9.4)
PR. 8" RJ DI TEE W/ 8"x4" RJ DI REDUCER
PR. 8" RJ GATE VALVE W/ BOX & COVER
POTHOLE AND VERIFY IF EX. WATER LINE IS ACTIVE
SEE BUILDING PIPING PLAN FOR CONTINUATION
PR. 4" WATER
EX. ABANDONED WELL
WATERSTONE WELL
CO-1 RIM:1121.37 INV:1110.50
PR. 8" DIP
72.33' of 4" @ 4.15%
CO-2 RIM:1122.01 INV:1113.50
8" RJ DI 45° BEND
PR. 8" WATER
61.88' of 4" @ 4.31%
PR. 8" RJ DI TEE
UNDG. POWER TO WELLS (TYP.)
10' BUILDING SETBACK
AREA 2.141 ACRES
PARCEL ID: 08098 001001, 08098 001002 08098 001003, 08098 001004
CITY OF FLOWERY BRANCH GEORGIA
DEED BOOK 9253, PAGE 463
PLAT BOOK 876, PAGE 1
*LIMITS OF DISTURBANCE
0.92 AC (ON-SITE)
0.14 AC (OFF-SITE)
±1.06 AC (TOTAL)
75' IMPERVIOUS BUFFER
Ø48" ISOLATED MANHOLE FOR CHEMICAL SPILL CONTAINMENT - ANY SPILLS TO BE REMOVED BY VACUUM TRUCK. THIS MH IS NOT CONNECTED TO THE SANITARY SEWER SYSTEM.
PR. 8" WATER
8" RJ DI 45° BEND
PR. RECEIVING PIT
EXISTING SS MH RIM:1113.61
INV IN: 1106.75 4"
INV IN: 1104.00 12"
INV OUT: 1103.93 12"
50' STREAM BUFFER
EX. 20' SEWER EASEMENT
EX. WETLANDS (APPROX.)
25' STREAM BUFFER
EX. 12" SAN. SEWER
EX. WETLANDS (APPROX.)
EX. STREAM CENTERLINE
30' BUILDING SETBACK
PR. HORIZONTAL DIRECTIONAL DRILL ±130 LF 8" HDPE DR-11 (DIPS) WATER MAIN. PROVIDE RESTRAINED HDPExMJ TRANSITION COUPLINGS ON EITHER END TO CONTINUE PIPE MATERIAL AS DUCTILE.
PERMANENT UTILITY EASEMENT
CONTRACTOR SHALL REMOVE EX. EVERGREEN SHRUBS, VEGETATION, AND CREPE MYRTLE TREE & PROVIDE REPLACEMENT OF ALL LANDSCAPING TO MATCH EXISTING.
PR. CONNECTION TO EX. WATER MAIN W/ 8"x6" RJ DI REDUCER, RJ DI BENDS, AND 6" TAPPING SLEEVE & VALVE
PARCEL ID: 08098A000206
WATER STONE CROSSING COMMUNITY ASSOC INC
DEED BOOK 4312, PAGE 80
PLAT BOOK 816, PAGE 154A
EX. FIRE HYDRANT
EX. 6" WATER LINE
PR. LAUNCHING PIT
8" RJ DI 90° BEND
TEMPORARY CONSTRUCTION EASEMENT
PARCEL ID: 08098 01009
KOSWIRE INC.
4600 CANTRELL ROAD
FLOWERY BRANCH, GA 30542
26.72 ACRES
PARCEL ID: 08098 A000206
WATER STONE CROSSING COMMUNITY ASSOCIATION
4611 BEACON RIDGE LANE
FLOWERY BRANCH, GA 30542
15.52 ACRES
VIREO DR
EX. IRRIGATION WATER LINE
EX. STONE FENCE POST (TYP.)
EX. UNDG. POWER
EX. FIBER OPTIC LINE
96" CMP IE:1108.39
96" CMP IE:1108.52
SSMH TOP: 1120.41 IE: 1105.24 12" PVC IE: 1105.20 12" PVC
DWCB TOP: 1119.00 IE: 1114.12 18" RCP
DWCB TOP: 1119.29 IE: 1113.91 18" RCP IE: 1113.85 18" CMP
SWCB TOP: 1122.40 IE: 1116.80 18" CMP
SSMH TOP: 1122.27 IE: 1107.85 8" PVC
SSMH TOP: 1117.09 IE: 1106.33 8" PVC IE: 1104.95 12" PVC IE: 1104.92 12" PVC
SSMH TOP: 1116.13 IE: 1103.71 12" PVC IE: 1103.35 12" PVC
SSMH TOP: 1113.61 IE: 1104.00 12" PVC IE: 1103.93 12" PVC
18" RCP IE:1124.92
18" RCP IE:1123.17
18" RCP IE:1122.91
15" CMP IE:1121.25
15" CMP IE:1121.03
15" RCP IE:1118.06
15" RCP IE:1117.34
18" RCP IE:1118.84
18" RCP IE:1111.93
96" CMP IE:1107.85
96" CMP IE:1107.73
18" CMP IE:1116.56
1" PIF W/ 2" RB CAP
1" PIF W/ 1/2" RB CAP
1" OIP (0.25 S RJ)

KEYED NOTE:

① PIPE INSTALLED BEYOND BACKFLOW VAULT TO BE PAID FOR VIA LINEAR FOOT LINE ITEMS - NOT TO BE INCLUDED UNDER LUMP SUM WELL SITE IMPROVEMENTS ITEM.

UTILITY NOTES:

1. THE CONTRACTOR SHALL PROVIDE 72 HOUR NOTICE TO THE UTILITIES PROTECTION CENTER PRIOR TO CONSTRUCTION COMMENCEMENT OR EXCAVATION. THE CONTRACTOR SHALL PROVIDE ADEQUATE PROTECTION FOR ALL EXISTING UTILITIES WITHIN THE CONSTRUCTION AREA AND REPAIR ANY UTILITIES DAMAGED DURING CONSTRUCTION AT NO COST TO THE OWNER.
2. THE CONTRACTOR SHALL FIELD VERIFY LOCATION AND SIZE OF ALL EXISTING UTILITIES WITHIN THE PROJECT AREA. THE CONTRACTOR SHALL COORDINATE WITH UTILITY OWNERS ON ALL CONFLICTS.
3. THE CONTRACTOR SHALL VERIFY ALL DIMENSIONS AND LOCATIONS OF PROPOSED UTILITIES AND COORDINATE WITH ALL APPLICABLE PLANS FOR THE PROJECT. THE CONTRACTOR SHALL BE RESPONSIBLE FOR PROPER PLACEMENT AND FIT OF ALL PROPOSED UTILITIES. IF ANY DISCREPANCIES ARE DISCOVERED, NOTIFY THE ENGINEER IN WRITING WITHIN 24 HOURS.
4. TEN (10') FOOT HORIZONTAL & EIGHTEEN (18") INCH VERTICAL SEPARATION SHALL BE MAINTAINED BETWEEN ALL PROPOSED POTABLE WATER MAINS AND SANITARY SEWER MAINS.
5. FOUR (4') FOOT MINIMUM COVER SHALL BE MAINTAINED ABOVE ALL PROPOSED WATER MAINS AND SERVICE CONNECTIONS.
6. ALL SANITARY SEWER CONSTRUCTION SHALL COMPLY WITH ALL LOCAL STANDARDS AND SPECIFICATIONS.
7. THE CONTRACTOR SHALL ADJUST THE TOPS OF ALL EXISTING AND PROPOSED UTILITY STRUCTURES TO MATCH FINAL GRADE ELEVATIONS.
8. SEE MEP DESIGN SHEETS FOR EXACT PLACEMENT OF SPECIFIED UTILITIES.
9. ALL PROPOSED WATER MAIN PIPE & FITTINGS SHALL HAVE RESTRAINED JOINTS AND HAVE CONC. THRUST BLOCKING INSTALLED.

20' 10' 0' 20'
GRAPHIC SCALE 1" = 20'

GEORGIA811 www.Georgia811.com

ESG ENGINEERING
6400 Peake Rd
Macon, GA 31210
Ph: (478) 474-4996
Fax: (478) 474-5045

GROUNDWATER WELLS #4 & #5

FOR THE
CITY OF FLOWERY BRANCH

REVISIONS NO.	DESCRIPTION	DATE
1	ESPC SHEETS	11-7-25
2	BID SET OF PLANS	12-1-25
3	REVISED WITH CITY COMMENTS	12-5-25
4	ADDENDUM #1	12-8-25
5	ADDENDUM #2	12-11-25

BID SET

GEORGIA REGISTERED No. PE046341 PROFESSIONAL ENGINEER ANDREW D SWICEGOOD

DRAWN BY: DSC
CHECKED BY: ADS
DATE: OCT 2025
SCALE: SEE SCALE

CONTENT:

CIVIL:
UTILITY PLAN

SHEET NO: 2 3 5
C4.0

NOTE: COORDINATE BUILDING ANCHORAGE REQUIREMENTS WITH MANUFACTURER'S DRAWINGS

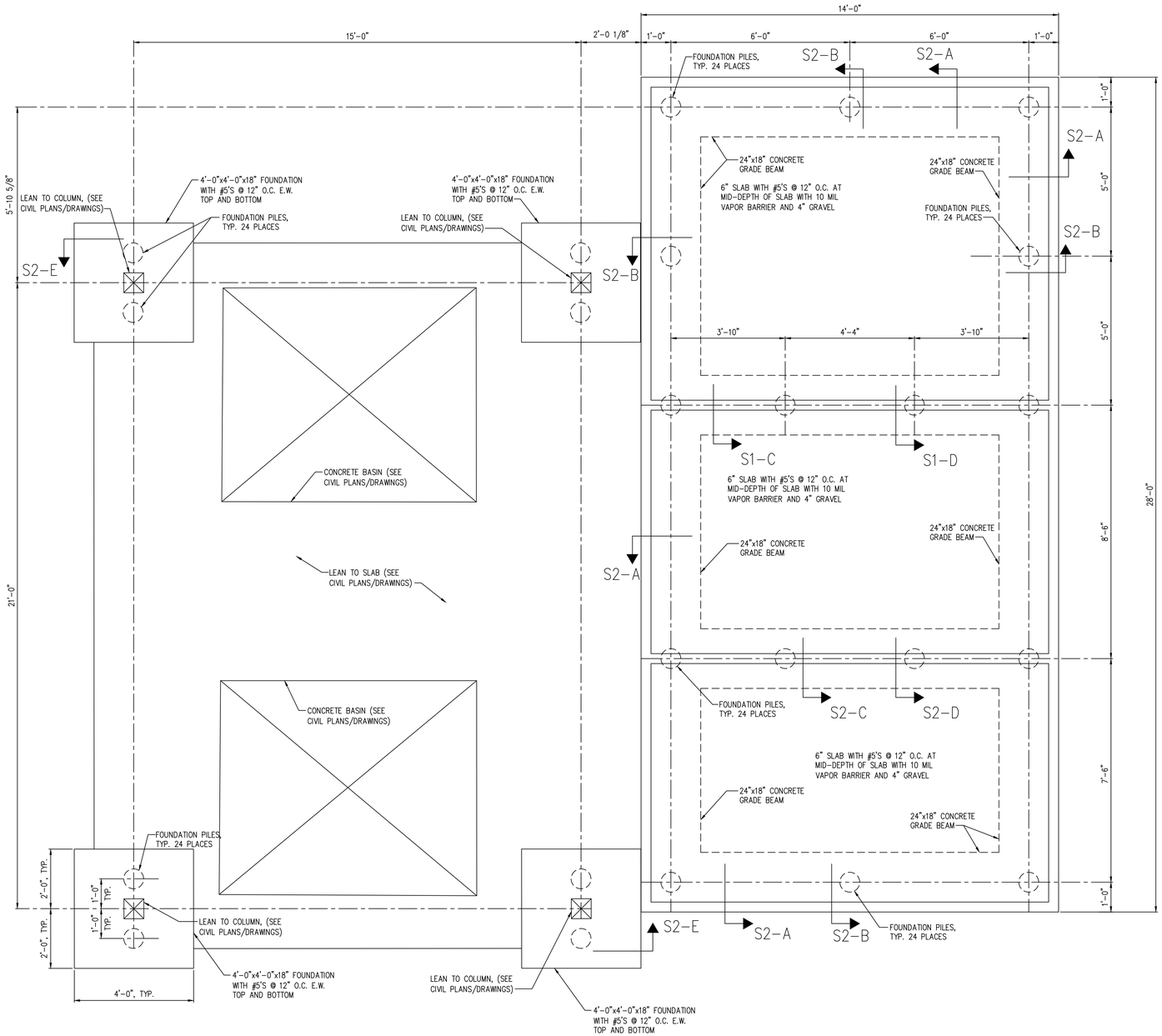

FOUNDATION PLAN

NO SCALE

REINFORCED CONCRETE GENERAL NOTES

1. ALL CONCRETE WORK SHALL CONFORM TO ACI 301, "SPECIFICATIONS FOR STRUCTURAL CONCRETE FOR BUILDINGS". DESIGN IS BASED ON ACI 318, "BUILDING CODE REQUIREMENTS FOR STRUCTURAL CONCRETE."
2. CONCRETE SHALL BE NORMAL WEIGHT (150 PCF) AND SHALL DEVELOP A MINIMUM COMPRESSIVE STRENGTH OF 4500 PSI AT 28 DAYS.
3. SUBMIT CONCRETE MIX DESIGNS FOR REVIEW, IN ACCORDANCE WITH ACI 318 TO THE EOR AND TESTING AGENCY.
4. THE PROPOSED MATERIALS AND MIX DESIGN SHALL BE FULLY DOCUMENTED AND REVIEWED. RESPONSIBILITY FOR OBTAINING THE REQUIRED DESIGN STRENGTH IS THE CONTRACTOR'S.
5. USE OF CALCIUM CHLORIDE, CHLORIDE IONS, OR OTHER SALTS IN CONCRETE IS NOT PERMITTED.
6. THE AIR CONTENT AT THE POINT OF PLACEMENT SHALL BE PER ACI 318 TABLE 4.2.1 FOR MODERATE EXPOSURE.
7. THE TESTING AGENCY SHALL SAMPLE AND TEST EACH 100 CU. YARDS OR FRACTION THEREOF OF EACH CLASS OF CONCRETE PLACED EACH DAY. SAMPLE CONCRETE IN ACCORDANCE WITH ASTM C172. PERFORM THE FOLLOWING TESTS IN ACCORDANCE WITH THE INDICATED STANDARD:

   SLUMP: ASTM C143

   AIR CONTENT: ASTM C231 (NORMAL WEIGHT CONCRETE) ASTM C173 (LIGHT WEIGHT CONCRETE)

   COMPRESSIVE STRENGTH: ASTM C39, WITH ONE CYLINDER AT 7 DAYS, 2 CYLINDERS AT 28 DAYS, AND ONE SPECIMEN HELD IN RESERVE.

   CONCRETE TEMPERATURE: ASTM C1064

   UNIT WEIGHT: ASTM C567
8. MOIST CURE CONCRETE WITH MOISTURE PROTECTIVE COVER FOR A MINIMUM OF 7 DAYS. CURING COMPOUNDS PERMITTED IF COMPATIBLE WITH ANY PLANNED FLOOR FINISHES
9. REINFORCING STEEL SHALL CONFORM TO ASTM A615, GRADE 60, UNLESS NOTED OTHERWISE.
10. TIE ALL REINFORCING STEEL AND EMBEDMENTS SECURELY IN PLACE PRIOR TO PLACING CONCRETE. PROVIDE SUFFICIENT SUPPORTS TO MAINTAIN THE POSITION OF REINFORCEMENT WITHIN SPECIFIED TOLERANCES DURING ALL CONSTRUCTION ACTIVITIES. "STICKING" DOWELS INTO WET CONCRETE IS NOT PERMITTED.
11. REINFORCING STEEL SHALL HAVE THE FOLLOWING CONCRETE COVER UNLESS NOTED OTHERWISE:

    CONCRETE CAST AGAINST EARTH (NOT FORMED): 3"

    FORMED CONCRETE EXPOSED TO EARTH OR WEATHER
    #6 BARS THROUGH #12 BARS 2"
    #5 BARS AND SMALLER 2"

    CONCRETE NOT EXPOSED TO EARTH OR WEATHER
    SLABS AND WALLS 1"
12. DO NOT WELD OR TACK WELD REINFORCING STEEL UNLESS APPROVED OR DIRECTED BY THE STRUCTURAL ENGINEER.

SOIL PARAMETERS

1. SOIL PARAMETERS
   A. SHALLOW FOUNDATIONS WERE ASSUMED TO BE INSUFFICIENT TO SUPPORT BUILDING DUE TO POOR SOIL CONDITIONS. DEEP FOUNDATION ELEMENTS ARE REQUIRED TO SUPPORT THE BUILDING.
   B. RECOMMENDATION IS BASED ON THE FOLLOWING SOILS REPORT:
      DRINKING WATER SITE
      GEOTECHNICAL ENGINEERING REPORT
      TERRACON PROJECT NO. HN255025
      DATED APRIL 3, 2025
2. IF SITE CONDITIONS DIFFER FROM THOSE INDICATED, THE DESIGN PROFESSIONAL SHALL BE NOTIFIED IMMEDIATELY.
3. ALL FOUNDATION WORK SHALL BE DONE 'IN THE DRY'.

GENERAL NOTES

1. DESIGN LOADS
   A. BUILDING LOAD ..... 120,000 LBS.
   B. SLAB LIVE LOAD ..... 100 PSF
   C. ROOF LIVE LOAD ..... 20 PSF
2. CODES:
   A. INTERNATIONAL BUILDING CODE, 2018 ED. WITH LATEST GEORGIA AMENDMENTS.
   B. REINFORCED CONCRETE: ACI 318-14.
3. FOUNDATION DESIGN ASSUMES ALL INTERIOR WALLS ARE LOAD BEARING AND BUILDING WEIGHT IS UNIFORMLY DISTRIBUTED TO FOUNDATION.
4. SHOP DRAWINGS GENERAL NOTES: THE PLANS, SECTIONS, AND DETAILS PROVIDED AS PART OF THE CONTRACT DOCUMENTS SHALL NOT BE USED IN A REPRODUCIBLE FORM AS PART OF THE SHOP DRAWINGS. ALL FABRICATORS & SUPPLIERS SHALL ANTICIPATE THAT REVISIONS TO SUBMITTALS MAY BE REQUIRED. THIS INCLUDES MODIFICATIONS TO DETAILS THAT ARE CHANGED FOR COORDINATION PURPOSES. NO ADDITIONAL FEES ARE PERMITTED FOR REVISING SUBMITTALS FOR WORK DESCRIBED IN THE CONTRACT DOCUMENTS.
5. CONTRACTOR TO FIELD VERIFY ALL DIMENSIONS AND ELEVATIONS BEFORE BEGINNING CONSTRUCTION.
6. SEE ESG DRAWINGS AND SPECIFICATIONS FOR REQUIREMENTS ON FLOOR AND WALL COATINGS

FOUNDATION PILE NOTES (PER UNIT)

1. IT IS THE INTENT OF THIS CONTRACT REQUIREMENT TO PROVIDE:
   A. VERTICAL FOUNDATION PILES (24 TOTAL) OF SIZE AND DETAIL THAT WILL ACHIEVE NOT LESS THAN 50,000 POUNDS ULTIMATE (25,000 POUNDS WORKING) COMPRESSION CAPACITY, AND 10,000 POUNDS ULTIMATE (5,000 POUNDS WORKING) TENSION CAPACITY, BEFORE FAILURE.
2. INSTALLATION OF PILES IS TO BE PERFORMED BY A PILE CONTRACTOR APPROVED BY THE OWNER.
3. MINIMUM VERTICAL PILE LENGTH SHALL BE 28 FEET REGARDLESS OF FIELD DETERMINED EXCESS CAPABILITY, EXCEPT THAT, IF DURING CONSTRUCTION PROGRESS, IT IS DETERMINED THAT ANY EXCESSIVE CAPACITY ACHIEVED DURING INSTALLATION IS CAUSING DELAYS OR UNDUE HARDSHIP, THE OWNER RESERVES THE RIGHT TO WAIVE THIS REQUIREMENT (BUT NOT BELOW SPECIFIED ULTIMATE CAPACITY) WITH APPROPRIATE CONTRACT AND CONTRACT PRICE CHANGES AGREED UPON BY OWNER AND CONTRACTOR.
4. PILE CONTRACTOR SHALL HAVE ALL REASONABLE ACCESS TO THE SITE, BOTH BEFORE AND AFTER SUCCESSFUL BIDDING, BUT SCHEDULING SHALL BE COORDINATED WITH THE EOR/OWNER. ALL INSURANCE, SAFETY, LEGAL, AND OTHER AGREED UPON REQUIREMENTS SHALL BE MET BY THE PILE CONTRACTOR BEFORE PERFORMING ANY WORK. IT SHALL BE THE RESPONSIBILITY OF THE PILE CONTRACTOR TO REVIEW THE SITE TO THEIR SATISFACTION PRIOR TO BIDDING. NO CONTRACT CHANGES ARE PERMISSIBLE BECAUSE OF LACK OF KNOWLEDGE OF REASONABLY ACCESSIBLE FEATURES ON THE SITE.
5. SOIL TEST REPORTS ARE INCLUDED IN THE BID PACKAGE. ANY INFERENCE DRAWN FROM THE REPORT, EXCEPT WHERE THE REPORT MIGHT BE FOUND ERRONEOUS, SHALL BE THE RESPONSIBILITY OF THE PILE CONTRACTOR.
6. DESIGN OF ALL PILE COMPONENTS TO MEET REQUIREMENTS SHALL BE PERFORMED BY A PROFESSIONAL ENGINEER REGISTERED IN THE STATE OF GEORGIA, EITHER EMPLOYED BY, OR RETAINED BY THE CONTRACTOR, WHO IS QUALIFIED AND EXPERIENCED IN THE EVALUATION OF THE PILE SYSTEM. SIGNED AND SEALED CALCULATIONS SHALL BE PROVIDED TO THE EOR/OWNER FOR REVIEW. CALCULATIONS SHALL INCLUDE AN ANALYSIS OF THE PILE FOR BUCKLING.
7. PILE CONTRACTOR SHALL PROVIDE WITH THEIR BID A RESUME OF JOBS OF SIMILAR DETAIL AND QUANTITY THAT THEY HAVE PERFORMED.
8. WORK SHALL BE PERFORMED IN AN ORDERLY AND WORKMANLIKE FASHION. SCHEDULING SHALL BE MAINTAINED. PILES SHALL BE LOCATED WITHIN APPROXIMATELY 3" OF THEIR SHOWN LOCATION, AND SHALL BE BATTERED AS SHOWN. PILE CONTRACTOR SHALL PROVIDE ALL LABOR AND MATERIALS AS REQUIRED AND SHALL HAVE A FULL-TIME SUPERINTENDENT ON SITE FOR THE DURATION OF CONSTRUCTION. DAILY RECORDS SHALL BE MADE AND MAINTAINED ON SITE. RECORDS SHALL BE MADE AVAILABLE TO EOR UPON REQUEST. RECORDS SHALL INCLUDE PILE DEPTH TORQUE LOG AND ESTIMATED CAPACITY.
9. AT THE END OF EACH WORK DAY, THE AREA AROUND THE FOUNDATION SITE SHALL BE LEFT IN A CONDITION THAT WILL NOT INTERFERE WITH OTHER TRADES OR THAT WILL NOT POSE A DANGER TO OTHERS ON SITE.
10. CONTRACTOR SHALL PROPOSE AN ALTERNATIVE ADDITIVE TEST PILE PROGRAM AT THE BEGINNING OF THE PROJECT. THE PROGRAM SHALL CONFIRM THE PILE DESIGN MEETS THE REQUIRED COMPRESSION AND TENSION CAPACITY. TESTING SHALL BE OBSERVED BY THE OWNER AND/OR THE OWNER'S REPRESENTATIVE.

NO.	DESCRIPTION	DATE	BY
1	LEAN TO ADDITION	12.10.25	MNE
0	ISSUED FOR CONSTRUCTION	12.4.25	MNE

GEORGIA REGISTERED No. PEF003000 STRUCTURAL MATTHEW N. ELLIS ENGINEER

12.4.25
Pi-Tech, Inc. COA#PEF003000
COA Expiration: 6.30.2026

DRAWN BY: PEJ
CHECKED BY: MNE
DATE: 12.4.2025
SCALE: AS SHOWN

PI-TECH, INC.
115 FOREST HILL RD
MACON, GA 31210
478.743.5600
www.pi-techinc.com

FLOWERY BRANCH CHEM. BUILDING
FOR
ESG ENGINEERING
MACON, GA

SHEET NO. S1
SHEET 1 OF 2

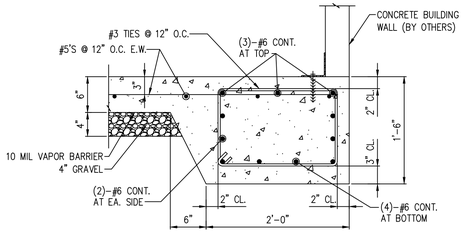

S2-A

NO SCALE

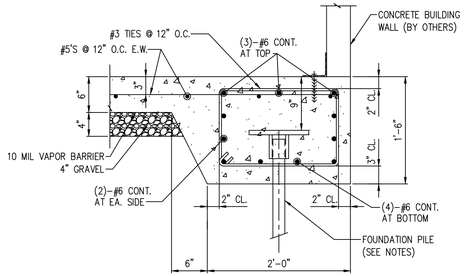

S2-B

NO SCALE

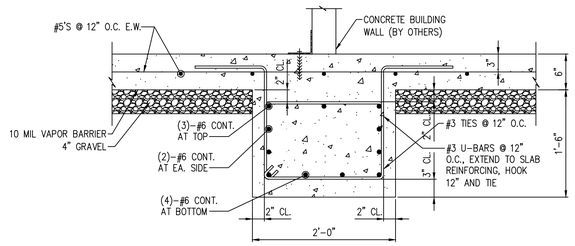

S2-C

NO SCALE

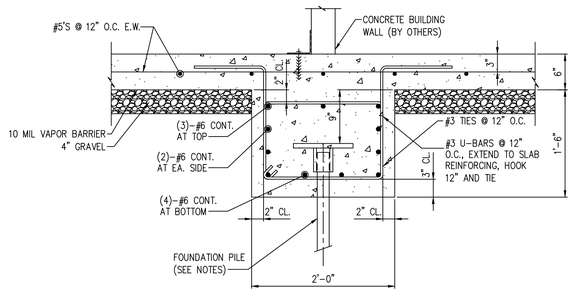

S2-D

NO SCALE

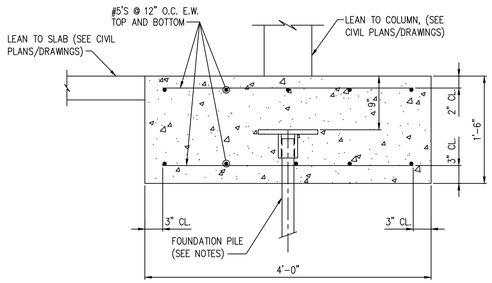

S2-E

NO SCALE

NO.	DESCRIPTION	DATE	BY
1	LEAN TO ADDITION	12.10.25	MNE
0	ISSUED FOR CONSTRUCTION	12.4.25	MNE

GEORGIA REGISTERED No. SE000062 STRUCTURAL ENGINEER MATTHEW N. ELLIS
12.4.25
Pi-Tech, Inc. COA#PEF003000
COA Expiration: 6.30.2026

DRAWN BY: PEJ
CHECKED BY: MNE
DATE: 12.4.2025
SCALE: AS SHOWN

PI-TECH, INC.
115 FOREST HILL RD
MACON, GA 31210
478.743.5600
www.pi-techinc.com

FLOWERY BRANCH CHEM. BUILDING
FOR
ESG ENGINEERING
MACON, GA

SHEET NO. S2
SHEET 2 OF 2

MECHANICAL SPECIFICATIONS

1) Provide all heating, ventilation and air conditioning items indicated on the drawings, described in this specification or required for a complete and proper installation.

2) Comply with all pertinent codes, ordinances and regulations. Refer to website for Dept. of Community Affairs for current Codes Editions.

3) The contractor shall not attempt to precisely scale dimensions from these drawings to obtain construction dimensions and clearances. The contractor shall verify all actual dimensions and clearances. Although these plans are diagrammatic in nature, they shall be followed as closely as site conditions, new construction, and work by other trades shall permit. Deviations from these drawings, which are required to conform to the available space or the actual building construction, shall be made at no additional cost to the owner.

4) Furnish without extra charge, any additional material and labor required to comply with the above codes and standards, even though the work may not be described in the contract documents. Where the requirements of the contract documents exceed the requirements of the above codes and standards, the contract documents shall take precedence.

5) All equipment and material shall be new and of first quality. Equipment and material shall be the same or equal to the basis of design listed on these drawings and shall be UL listed.

6) Cooperate and coordinate with other trades in order that all systems in the work may be installed in the best arrangement.

7) Examine the areas and conditions under which work of this section will be installed. Correct conditions detrimental to the proper and timely completion of the work. Notify Architect of any discrepancies. Do not proceed until unsatisfactory conditions have been corrected.

8) Avoid interference with structure, and with work of other trades. Install all equipment per manufacturer's instructions. Install accessible parts, including equipment, coils, valves, dampers, controls, and filters with adequate clearance for inspection, adjustments, repair and replacement.

9) All other materials not specifically described but required for a complete and proper installation shall be as selected by the contractor subject to acceptance by the Engineer.

10) All ductwork shall be fabricated from galvanized sheet metal duct and conform to SMACNA "HVAC Duct Construction Standards–Metal and Flexible. Seal all joints in ductwork with mastic sealant.

11) Refrigerant piping shall conform to manufacturer's recommendations and installation instructions. Refrigerant piping shall be ASTM B280 Type ACR or ASTM B88 Type L drawn copper tubing with wrought copper fittings. Insulate suction line with ½" thick flexible foamed plastic cellular foam (Armaflex or equivalent). All piping shall be adequately supported. Insulation installed outdoors shall be painted with two coats of Armacell WB coating or equivalent. Refrigerant pipes shall be installed in accordance with ASHRAE standard 15–2022 section 9.12 and shall be tested in accordance with ASHRAE standard 15–2022 section 9.13. Contractor shall issue a letter to design team stating that refrigerant pipes has been installed and tested under the referenced sections. Contractor shall refer to ASHRAE standard 15–2022 sections 9.10 and 9.11 for additional information regarding refrigerant piping. Penetration of refrigerant pipes shall be protected with a through penetration protection means. The through penetration protection shall be the same or higher rating than the assembly.

12) Thermostats: Provide 24 volt, programmable 24–hour, 7–day thermostat to control heating stages in sequence with delay between stages and supply fan to maintain temperature setting. For Heat Pumps include system selection switch heat–off–cool and fan control switch (auto–on), emergency heat switch (auxiliary/emergency heat indicator lights).

13) Provide fire and smoke rated flexible connections between fans and ducts. Material shall comply with NFPA 90A requirements for material in supply air stream.

14) Install all equipment in accordance with manufacturer's instructions and recommendations including clearances recommended for proper operation or service. All filters and serviceable parts shall be readily accessible.

15) Do not cut into or reduce the size of any structural member without the permission of the Architect.

16) Provide weather–proof flashing at all duct and pipe penetrations through the building walls and roof. As a minimum, flashings shall be designed and installed in accordance with SMACNA standards. Flashings shall be guaranteed weatherproof.

17) Support all HVAC units, ductwork, piping and other appurtenances from structure, provide vibration isolation at all fans which are not internally isolated. Provide hanger rod with built in rubber–in–shear isolator. Between drain pan and unit provide 4 each rubber–in–shear isolator. Do not attach vibration isolator to drain pan. Do not screw or drive fasteners into non–structural components such as roof decks or non–load bearing walls.

18) Thoroughly clean all components and remove all dirt, scale, oil, and other foreign substances. Provide clean air filters for all equipment.

19) Perform all tests necessary to demonstrate the integrity of the complete installation to the approval of the Engineer and all other authorities having jurisdiction. Make all adjustments necessary and balance the completed system in accordance with the data shown. Balance the systems in accordance with NEBB or AABC standards. Acceptable tolerances shall be minus ten percent to plus five percent of all measurements. Balancing shall be done by an independent licensed (by NEBB or AABC) TAB contractor. Make the following tests and submit reports to the Architect:
   a) Airflow rate at each supply, return and exhaust outlet or inlet.
   b) Total airflow rate and total static pressure for each supply and exhaust fan. Test exhaust fans with room doors closed.
   c) Motor speed, for multiple speed fans (e.g. high, medium, low).
   d) For direct drive fans, provide speed settings and actual rpm, including ECM motor driven fans
   e) Provide fan and motor rpm for belt driven fans. Provide sheave sizes.
   f) Outside airflow rate to each HVAC unit and supply fan.
   g) Motor current (and compare with nameplate data) at all motors.
   h) Entering and leaving air dry–bulb and wet–bulb conditions at all cooling coils.
   i) Heat output capacity for unit heaters, heating devices and coils (kW or MBH).
   j) Manufacturer, model and serial number for each piece of HVAC equipment scheduled on drawings.
   k) Calibrate thermostats to be within one degree of actual temperature at thermostat.
   l) Verify that all HVAC devices operate as scheduled or indicated (i.e. ON–OFF, 2–stage, variable output (SCR heaters), etc.

20) The entire system shall be warranted for a period of one (1) year beginning with Owner's acceptance of the work. Compressors shall include a minimum of five (5) year parts only warranty from the manufacturer. All labor and materials necessary to repair or replace the system or portions thereof, during that time shall be warranted for a period of one (1) year from the repair of replacement.

21) Up Blast fan (direct drive): Side wall mounted exhaust fans shall be upblast centrifugal direct drive type. The fan wheel shall be centrifugal backward inclined, constructed of aluminum and shall include a wheel cone carefully matched to the inlet cone for precise running tolerances. Wheels shall be statically and dynamically balanced. The fan housing shall be constructed of heave gauge aluminum with a rigid internal support structure. Wind bands shall have a rolled bead for added strength and shall be joined to curb caps with a leak–proof, continuously welded seam. Motors shall be mounted out of the airstream on vibration isolators. Fresh air for motor cooling shall be drawn into the motor compartment from an area free of discharge contaminants. Motors shall be readily accessible for maintenance. A disconnect switch shall be factory installed and wired from the fan motor to a junction box within the motor compartment. A conduit chase shall be provided through the curb cap to the motor compartment for ease of electrical wiring. All fans shall bear the AMCA Certified Ratings Seal for sound and air performance. Each fan shall bear a permanently affixed manufacturer's nameplate containing the model number and individual serial number for future identification. Refer to schedule for further requirement.

22) Louvers: 4" deep, 12 gauge (0.081) etched and 30–minute clear anodized extruded aluminum, drainable blades and frame; back mounted 1/2" mesh 19–gauge screen; flange frame. Louver shall be rated for no water carry–through at 900 face velocity, 0.15" maximum pressure drop for 4–foot square sample tested according to AMCA Standard 500, 1973.

23) SUBMITTALS AND SUBMITTAL PROCEDURES:
   a. Contractor shall review the submittal data and check for the purpose of compliance with safety requirements, verification of dimensions, contract documents and methods and means prior to submitting to design professional. Contractor shall indicate approval by indicating such on the submittal.
   b. Transmit each submittal electronically in PDF format.
   c. Sequentially number submittal files and transmittal form. Revise submittals with original number and a sequential alphabetic suffix. File names shall describe item included in file.
   d. Identify Project, the Contractor, Subcontractor or supplier; pertinent drawing and detail number, and specification section number, as appropriate on each copy. Each file shall include an index of items included in file.
   e. Apply the Contractor's stamp, signed or initialed certifying that review, approval, verification of Products required, field dimensions, adjacent construction Work, and coordination of information is in accordance with the requirements of the Work and Contract Documents.
   f. Submittal data for all items in project shall be submitted at one time. Submittal shall be divided into groups with file sizes not exceeding 6 MB. If there is unavailable data such as control submittal, etc., these may be submitted later if not doing so would delay project progress. Data shall include capacities, complete installation instructions, dimensional data and electrical data, BHP, motor HP, operating weights and load distribution at mounting points.
   g. Deliver submittals electronically to the Design Professional.
   h. Schedule submittals to expedite the Project, and coordinate submission of related items.
   i. For each submittal for review, allow 15 days excluding delivery time to and from the Contractor.
   j. Identify variations from Contract Documents and Product or system limitations that may be detrimental to successful performance of the completed Work.
   k. Provide space for the Contractor and the Architect/ review stamps.
   l. When revised for resubmission, identify all changes made since previous submission.
   m. Distribute copies of reviewed submittals as appropriate. Instruct parties to promptly report any inability to comply with requirements.
   n. Submittals not requested will not be recognized or processed.
   o. Provide files containing only related items (such as piping, equipment, air distribution, etc.)

24) Instruct Owner's representative in the operation of the systems, using the operation and maintenance manual as a teaching aid.

25) Provide an operation and maintenance manual. As a minimum, the manual shall contain:
   a. A complete list of all equipment and appurtenances with equipment designations (per Drawings), manufacturers, and catalog numbers.
   b. Copies of manufacturers' brochures and instructions for operation and maintenance of all mechanical equipment, including replacement parts lists.
   c. Typed system operation and maintenance instructions, including inspection, lubrication, and service instructions and schedules.
   d. List of names, addresses and phone numbers of distributors of all equipment and appurtenances.
   e. Manufacturers' warranties.

26) Indoor, direct–expansion, wall–mounted fan coil unit (ACU). Unit shall be complete with cooling/heating coil, fan, fan motor, piping connectors, electrical controls, microprocessor control system, and integral temperature sensing. Unit shall be furnished with integral wall mounting bracket and mounting hardware. Cabinet discharge and inlet grilles shall be attractively styled, high–impact polystyrene. Cabinet shall be fully insulated for improved thermal and acoustic performance. Fan shall be tangential direct–drive blower type with air intake at the top of the unit and discharge at the bottom front. Automatic, motor–driven vertical air sweep shall be provided standard. Air sweep operation shall be user selectable. The vertical sweep may be adjusted (using the remote control) and the horizontal air direction may be set manually. Coil shall be copper tube with aluminum fins and galvanized steel tube sheets. Fins shall be bonded to the tubes by mechanical expansion and golden hydrophilic pre–coated. A drip pan under the coil shall have a drain connection for hose attachment to remove condensate. Condensate pan shall have internal trap. Motors shall be open drip–proof, permanently lubricated ball bearing with inherent overload protection. Fan motors shall be 4–speed. Controls shall consist of a microprocessor–based control system which shall control space temperature, determine optimum fan speed, and run self–diagnostics. The temperature control range shall be from 62F to 86F (17C to 30C) in increments of 1F or 1C, and have 46F Heating Mode (Heating Setback). The wireless or wired remote controller shall have the ability to act as the temperature sensing location for room comfort. Refer to schedule for preference on wired or wireless thermostat. The unit shall have the following functions as a minimum: An automatic restart after power failure at the same operating conditions as at failure. A timer functions to provide a minimum 24–hour timer cycle for system Auto Start/Stop. Temperature–sensing controls shall sense return air temperature. Indoor coil freeze protection. Wireless infrared remote control and/or wired remote control as scheduled to enter set points and operating conditions. Automatic air sweep control to provide on or off activation of air sweep louvers. Dehumidification mode shall provide increased latent removal capability by modulating system operation and set point temperature. Fan–only operation to provide room air circulation when no cooling is required. Diagnostics shall provide continuous checks of unit operation and warn of possible malfunctions. Error messages shall be displayed at the unit. Fan speed control shall be user–selectable: high, medium, low, or microprocessor controlled automatic operation during all operating modes. Automatic heating–to–cooling changeover in heat pump mode. Control shall include deadband to prevent rapid mode cycling between heating and cooling. Indoor coil high temperature protection shall be provided to detect excessive indoor discharge temperature when unit is in heat pump mode. Unit shall have filter track with factory–supplied cleanable filters. Indoor fan motor to operate on 115V on model size 12 and on 208–230V on model sizes 09–36, as specified. Power is supplied from the outdoor unit. All units should have refrigerant lines that can be oriented to connect from the left, right or back of unit. Both refrigerant lines need to be insulated. The condensate pump shall remove condensate from the drain pan when gravity drainage cannot be used. Pump shall be designed for quiet operation. Pump shall consist of two parts: an internal reservoir/sensor assembly, and a remote sound–shielded pump assembly. A liquid level sensor in the reservoir shall stop cooling operation if the liquid level in the reservoir is unacceptable. Refer to schedule for providing condensate pump. Only provide condensate pump were indicated on schedule.

27) Small Split Condensing unit: Casing (HPU): House components in welded steel frame with galvanized steel panels with weather resistant, baked enamel finish. Mount contactors and controls in weatherproof panel provided with full opening access doors. Provide removable access doors or panels with quick fasteners. Compressor: Hermetically sealed, 3600 rpm maximum, resiliently mounted with positive lubrication and internal motor protection. Compressor: Hermetic reciprocating type or Hermetic scroll type. Condenser Coils: Aluminum fins mechanically bonded to seamless copper tubing or all aluminum fins and tube. Air test under water to 425 psig, and vacuum dehydrate. Seal with holding charge of refrigerant. Coil Guard: Louvered or PVC coat steel wire. Fans and motors: Direct driven propeller type condenser fans with fan guard on discharge. Weatherproof motors suitable for outdoor use, single phase permanent split capacitor with permanent lubricated ball bearings and built in thermal overload protection. Fan Guard: PVC coat steel wire. Refrigerant circuit: For each refrigerant circuit, provide: Filter dryer liquid line. Suction accumulator. Suction and liquid line service valves and gage ports. Charging valve. Condenser pressure relief mechanism. Factory wired with single point power connection. Factory wired controls shall include contactor, high– and low–pressure cutouts, internal winding thermostat for compressor, control circuit transformer, non–cycling reset relay. Provide a surge capacitor and lightning arrestor in unit cabinet for protection from power surges due to lightning and switching transients. Provide controls to permit operation down to 0 degrees F ambient temperature were scheduled to include: Crankcase heater with thermostat. Head pressure switch to cycle fan motors in response to refrigerant condensing pressure. Solid state control to vary speed of one condenser fan motor in response to refrigerant condensing pressure. Refer to Schedule on Drawings for additional specifications.

28) Corrosion Resistance Coating (ACU–1 & 2): Evaporator coil serving the fluoride and sodium hypochlorite chemical room shall be factory–coated or field–coated with a corrosion–resistant HVAC coil coating (Heresite P–413, Blygold PolurAl XT, or equal). Coil shall be cleaned, dried, and protected prior to coating. Apply two thin, even coats to all exposed coil surfaces, copper tubing, headers, and U–bends. Coating shall be compatible with chlorine and fluoride vapors and rated for severe chemical environments. Refrigerant piping associated with this system shall be fully coated for corrosion protection and installed within a concealed guard or protective enclosure to prevent chemical exposure and mechanical damage. Contractor shall protect all electrical components during coating and restore system operation after curing.

29) Basic motor requirements: basic requirements apply to mechanical equipment motors, unless otherwise indicated. Motors 1/2 hp and larger: Polyphase, unless otherwise scheduled. Motors smaller than 1/2 hp: single phase. Frequency rating: 60 Hz. Service factor: according to NEMA MG 1, general purpose continuous duty, design type "B." Enclosure: open drip–proof, unless otherwise indicated. Efficiency: motors shall have a higher efficiency rating than industry standard average motor as delineated in IEEE Standard 112, test method 13. Thermal protection: where indicated or required, internal protection automatically opens power supply circuit to motor when winding temperature exceeds a safe value calibrated to temperature rating of motor insulation. Thermal protection device automatically resets when motor temperature returns to normal range, unless otherwise indicated.

30) Hangers and supports: Building attachments: concrete inserts or structural–steel fasteners appropriate for building materials, and beam clamps. Hanger materials: galvanized, sheet steel or round, threaded steel rod. Hangers installed in corrosive atmospheres: electrogalvanized, all–thread rod or galvanized rods with threads painted after installation. Straps and rod sizes: comply with SMACNA's "HVAC Duct Construction Standards––Metal and Flexible" for sheet steel width and thickness and for steel rod diameters. Duct attachments: sheet metal screws, blind rivets, or self–tapping metal screws; compatible with duct materials. Trapeze and riser support galvanized steel shapes and plates: steel shapes complying with ASTM A 36/A 36M.

31) Sealant materials: joint and seam sealants, general: the term "sealant" is not limited to materials of adhesive or mastic nature but includes tapes and combinations of open–weave fabric strips and mastics. Joint and seam tape: 2 inches wide; glass–fiber fabric reinforced. Joint and seam sealant: one–part, nonsag, solvent–release–curing, polymerized butyl sealant, formulated with a minimum of 75 percent solids. Flanged joint mastics: one–part, acid–curing, silicone, elastomeric joint sealants, complying with ASTM C 920, type S, grade NS, class 25, use O.

32) All HVAC equipment such as AH, CU, EF, AC, HP, and RTU shall have visible nameplates with their associated marks on them.

33) Acceptable Manufacturers are:

Small Split Units:	Mitsubishi, Daikin, Hitachi, Toshiba
Grilles, Registers & Diffusers:	Titus, Nailor, Price, Tuttle & Bailey, Kruger, Metal Aire (Color selection submitted to Architect)
Fans:	Twin–City, Cook, Greenheck, Penn Barry, Acme, American Cool Air, Captive Air, Solar & Palau
Louvers/Dampers/Fire Dampers:	United Enertech, Greenheck, Ruskin, Arrow United, Lloyd Industries, Air Balance (Color selection submitted to Architect)
Controls–provided with unit:	Provide thermostats by same manufacturer as equipment

Last Saved By: Owner
Plotted: 12/11/2025 10:58 AM
Drawing Path: Z:\2025\101 Well Project Chem Feed Building Flowery Branch, GA\DRAWINGS\TE25-101 HVAC.dwg

TOTAL ENGINEERS
169 New Street, Macon, GA 31201
(478)741-4632 - T.E. project # 25-101
www.totalengineers.com
GA COA NO # PEF009195 EXP: 06/30/2026

ESG ENGINEERING

GROUNDWATER WELLS #4 & #5
FOR THE
CITY OF FLOWERY BRANCH

REVISIONS

NO.	DESCRIPTION	DATE
2	ADDENDUM 2	



DRAWN BY: KMP
CHECKED BY: KMP
DATE:
SCALE:

CONTENT:

MECHANICAL SPECIFICATIONS

SHEET NO:

M0.1

FAN SCHEDULE

MARK	CFM	EXT. SP IN W.G.	DRIVE TYPE	MOTOR HP/W	MAX. FAN (RPM)	MAX TIP SPEED FPM	POWER/ PHASE	LAY-OUT BASIS: GREENHECK	NOTES
EF-1	350	0.20	DIRECT	1/10 HP	1425	4055	115/1	CUE-080-VG	1; 2; 3; 4; 5
EF-2	350	0.20	DIRECT	1/10 HP	1425	4055	115/1	CUE-080-VG	1; 2; 3; 4; 5
EF-3	600	0.20	DIRECT	1/10 HP	1590	4525	115/1	CUE-090-VG	1; 2; 3; 4; 5

1. VERIFY ELECTRIC POWER REQUIREMENTS WITH ELECTRICAL PLANS, WHICH TAKE PRECEDENCE OVER THIS INFORMATION. BOTTOM OF FAN AT 8' AFF. COORDINATE EXACT ELEVATION WITH ARCHITECT.
2. CENTRIFUGAL WALL MOUNT FAN. PROVIDE WALL MOUNTING BRACKET, GRAVITY SHUTTER WITH BUG SCREEN, EC MOTOR, AND SPEED CONTROLLER. ALL PARTS SHALL BE INTERNALLY AND EXTERNALLY COATED(INCLUDING WHEEL AND ALL SURFACES IN AIR STREAM)
3. PROVIDE ALL INTERNALLY AND EXTERNALLY COATED(INCLUDING WHEEL AND ALL SURFACES IN AIR STREAM) SUITABLE FOR SEVERELY CORROSIVE ATMOSPHERES(POTASSIUM PERMANGANATE & SODA ASH). COATING SHALL BE FACTORY APPLIED HI-PRO POLYESTER COATING.
4. POLYSTER COATING SHALL BE GREENHECK HI-PRO POLYSTER OR EQUAL. PROVIDE MANUFACTURER'S WALL GRILL.
5. FAN SHALL BE CONTROLLED BY WALL SWITCH TO ENERGIZE THE FAN PRIOR TO ENTERING ROOM. WALL SWITCH SHALL BE PROVIDED BY ELECTRICAL.

LOUVER SCHEDULE

MARK	SIZE W X H (INCHES)	MIN. FREE AREA (SQ. FT.)	MAXIMUM PRESS. DROP (IN. W.G.)	FINISH (COLOR BY ARCHITECT)	MOTOR OPERATOR	INTERLOCK TO OPEN WITH	LAY-OUT BASIS: GREENHECK	NOTES
L-1	18"X18"	0.73	0.08	ENAMEL	YES	EF-1	GREENHECK ECD-401	1; 2
L-2	18"X18"	0.73	0.08	ENAMEL	YES	EF-2	GREENHECK ECD-401	1; 3
L-3	24"X18"	1.02	0.08	ENAMEL	YES	EF-3	GREENHECK ECD-401	1; 3

1. STATIONARY EXTRUDED ALUMINUM LOUVER. PROVIDE CORROSION RESISTANCE KYNER FINISH. PROVIDE BIRD AND INSECT SCREEN. COORDINATE COLOR WITH ARCHITECT (PROVIDE COLOR SAMPLES WITH SUBMITTAL).
2. BOTTOM OF LOUVER AT 24-INCHES AFF.

MINI SPLIT & COOLING ONLY FAN COIL SYSTEM SCHEDULE

OUTDOOR UNIT MARK	INDOOR UNIT MARK	MIN COOLING MBH	MIN HEATING MBH	SUPPLY AIR CFM HI-LO	POWER VAC/PH	CARRIER MODEL #		NOTES
						OUTDOOR	INDOOR	
HPU-1	ACU-1	18.0	18.0	380-840	208/1	37MARAQ18AA3	45MAHAQ18XA3	1; 2; 3; 4; 5; 6; 7; 8
HPU-2	ACU-2	18.0	18.0	380-840	208/1	37MARAQ18AA3	45MAHAQ18XA3	1; 2; 3; 4; 5; 6; 7; 8
HPU-3	ACU-3	36.0	36.0	380-840	208/1	37MARAQ36AA3	45MAHAQ36XA3	1; 2; 3; 4; 5; 6; 7

1. VERIFY ELECTRICAL POWER REQUIREMENTS WITH ELECTRICAL PLANS WHICH TAKES PRECEDENCE OVER THIS INFORMATION.
2. MINI SPLIT SYSTEM MOUNTED ON WALL (SEE PLANS). PROVIDE MANUFACTURER'S WIERED THERMOSTAT
3. ROUTE CONDENSATE TO OUTSIDE. REFER TO DRAWING FOR FURTHER INFORMATION. PROVIDE RECTOR SEAL COIL MOUNTED(CLIPPED TO COIL) SATE-T-SWITCH SS610E.
4. WIRE SWITCH TO SHUT UNIT DOWN IN CASE OF CONDENSATE OVERFLOW. PROVIDE SELF CLEANING IONIZATION SYSTEM FOR UNIT. REFER TO SCHEDULE FOR FURTHER INFORMATION.
5. PROVIDE DISCONNECT AND ELECTRICAL CONNTECTION TO OUTDOOR UNIT PER MANUFACTURER'S INSTRUCTIONS.
6. COOLING RANGE SHALL BE BETWEEN -22 F TO 122F. HEATING RANGE SHALL BE -22F TO 86F.
7. PROVIDE CONDENSATE PUMP LOCATED WITHIN ACU CABINET TO PUMP CONDENSATE TO DRAIN OUTSIDE WHERE REQUIRED. OMIT PUMP WHERE GRAVITY DRAIN IS POSSIBLE.
8. PROVIDE CORROSION RESISTANCE COATING FOR THE UNIT AND ITS ACCESSORIES. REFER TO SPECIFICATIONS FOR FURTHER INFORMATION.

SELF-CLEANING IONIZATION SYSTEM SCHEDULE

AIRFLOW CAPACITY MIN-MAX CFM	BASIS OF DESIGN GLOBAL PLASMA SOLUTIONS	NOTES
0-1200	GPS-FC	1; 2; 3; 4; 5

1. ONE SELF CLEANING IONIZATION SYSTEM SHALL BE INSTALLED PER SYSTEM.
2. ONE SELF CLEANING IONIZATION SYSTEM SHALL BE INSTALLED PER DUCTLESS MINI SPLIT UNIT.
3. SYSTEM SHALL BE USE FOR DUCTLESS MINI SPLITS.
4. SYSTEM SHALL BE EQUIPPED WITH CARBON FIBER BRUSHES AND LED OPERATION STATUS.
5. INTERLOCK IONIZATION SYSTEM TO RUN WITH EVAPORATOR FAN.

MECHANICAL SYMBOLS & ABBREVIATIONS LEGEND

	NEW PIPE, DUCTWORK OR EQUIPMENT
24x12 24x12	DUCT SIZE: FIRST DIMENSION IS SIDE DRAWN
	FLEXIBLE ROUND DUCTWORK
F SCD SD	FIRE DAMPER, SMOKE DAMPER, SMOKE DETECTOR
	CEILING SUPPLY DIFFUSER
	CEILING RETURN OR EXHAUST AIR
	S.A DUCT OUT OF TU BOX WITH DUCT LINER FOR THR FIRST FIVE FEET OF DUCT OUT OF TU BOX
	SIDEWALL REGISTER OR GRILLE
	CHANGE IN PIPE OR DUCT SIZE OR SHAPE
R	REFRIGERANT PIPING
D	CONDENSATE OR OTHER DRAIN PIPING
	ELBOW TURNED DOWN OR TURNED UP IN PIPING
T	THERMOSTAT, ARROW SHOWS CONTROL WIRING PATH
TC	TIME CLOCK
ø	DIAMETER
U.C.	UNDER-CUT DOOR 3/4", UNLESS OTHER SIZE NOTED
701 E1B	INDICATES EQUIPMENT ON PLANS; TOP ITEM SHOWS TYPE OF EQUIPMENT AND BOTTOM ITEM SHOWS SPECIFIC MARK NUMBER
4 S1 8"ø 300	ITEM IN HEXAGON SHOWS AIR DEVICE MARK NUMBER, ITEM ABOVE LINE SHOWS NECK SIZE, ITEM BELOW LINE SHOWS AIR FLOW THROUGH DEVICE, AND NUMBER IN FRONT SHOWS QUANTITY IF MORE THAN ONE
AFF	ABOVE FINISHED FLOOR
AH	AIR HANDLING UNIT
BTUH, MBH	BRITISH THERMAL UNITS, THOUSAND BRITISH THERMAL UNITS
CAP	CAPACITY
CFM	CUBIC FEET PER MINUTE
CLG	CEILING
CU	CONDENSING UNIT
DB, WB	DRY BULB TEMPERATURE, WET BULB TEMPERATURE
EA, EG	EXHAUST AIR, EXHAUST GRILLE
EF	EXHAUST FAN
EXT SP	EXTERNAL STATIC PRESSURE (USUALLY EXPRESSED IN INCHES OF WATER IN GAGE)
HP	HEAT PUMP UNIT
MVD, VD	MANUAL VOLUME DAMPER
OA	OUTSIDE AIR
RA, RG	RETURN AIR, RETURN GRILLE
SA	SUPPLY AIR
VAC, PH	VOLTS ALTERNATING CURRENT, NUMBER OF PHASES
W, KW	WATTS, KILOWATTS
UH	UNIT HEATER

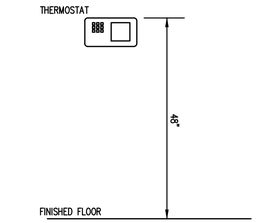

1 T-STAT DETAIL
SCALE: N.T.S.

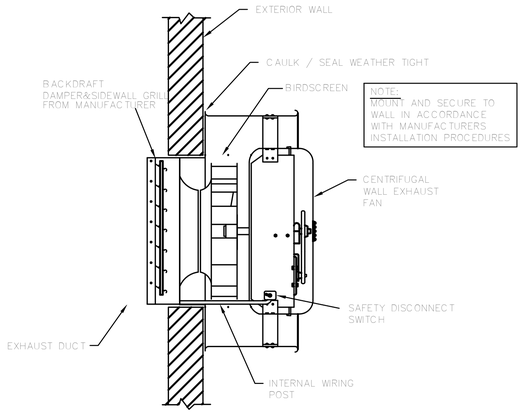

2 SIDEWALL CENTRIFUGAL EXHAUST FAN MOUNTING-DETAIL
SCALE: NTS

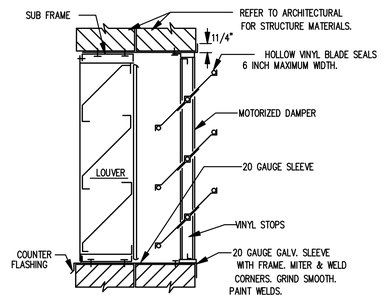

3 WALL MOUNTED LOUVER WITH DAMPER IN MASONRY WALL
SCALE: N.T.S.

TOTAL ENGINEERS
169 New Street, Macon, GA 31201
(478)741-4632 - T.E. project # 25-101
www.totalengineers.com
GA COA NO # PEF009195 EXP: 06/30/2026

ESG ENGINEERING

GROUNDWATER WELLS #4 & #5

FOR THE
CITY OF FLOWERY BRANCH

REVISIONS

NO.	DESCRIPTION	DATE
2	ADDENDUM 2	

GEORGIA REGISTERED PROFESSIONAL ENGINEER KRUNAL M PATEL

DRAWN BY: KMP
CHECKED BY: KMP
DATE:
SCALE:

CONTENT:

MECHANICAL SCHEDULES

SHEET NO:

M0.2

Last Saved By: Owner Plotted: 12/11/2025 10:58 AM
Drawing Path: Z:\2025\101 Well Project Chem Feed Building Flowery Branch, GA\DRAWINGS\TE\25-101 HVAC.dwg

KEY NOTES(THIS SHEET ONLY):

(1) ROUTE CONDENSATE DRAIN TO OUTSIDE 12-INCHES AFF. PROVIDE 45-DEGREE ELBOW AT END OF PIPE TO GUIDE CONDENSATE AWAY FROM EXTERIOR WALL. PROVIDE SPLASH BLOCK AT DISCHARGE.

(2) ROUTE CONDENSATE TO MOP SINK.

(3) LOUVER SHALL BE 4-INCH DEEP AT MAXIMUM.

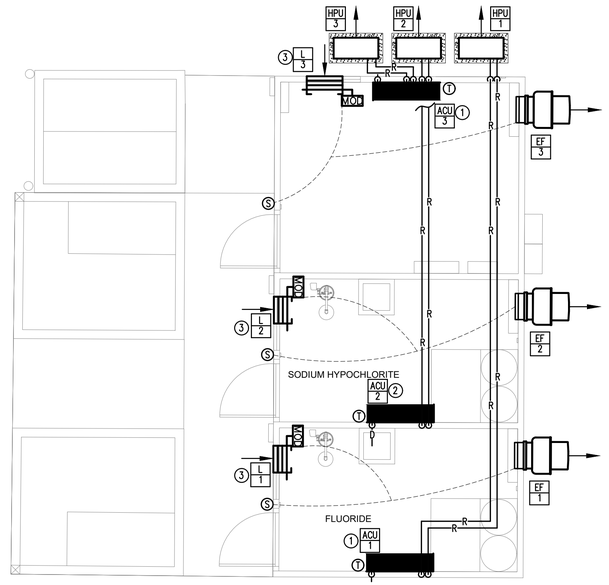

1 MECHANICAL PLAN
SCALE: 1/4"=1'-0"

TOTAL ENGINEERS
169 New Street, Macon, GA 31201
(478)741-4632 - T.E. project # 25-101
www.totalengineers.com
GA COA NO # PEF009195 EXP: 06/30/2026

ESG ENGINEERING

GROUNDWATER WELLS #4 & #5
FOR THE
CITY OF FLOWERY BRANCH

REVISIONS

NO.	DESCRIPTION	DATE
2	ADDENDUM 2	

GEORGIA REGISTERED PROFESSIONAL ENGINEER
KRUNAL M PATEL

DRAWN BY: KMP
CHECKED BY: KMP
DATE:
SCALE:

CONTENT:

MECHANICAL PLAN

SHEET NO:

M1.0

Last Saved By: Owner
Plotted: 12/11/2025 10:58 AM
Drawing Path: Z:\2025\101 Well Project Chem Feed Building Flowery Branch, GA\DRAWINGS\TE\25-101 HVAC.dwg

LEGEND

	LIGHTING AND POWER
	CONDUIT RUN CONCEALED ABOVE CEILING OR IN WALL CONTAINING 3 NUMBER 12 CONDUCTORS UNLESS SHOWN OTHERWISE. HASH MARKS, IF SHOWN, INDICATE QUANTITY OF NUMBER 12 CONDUCTORS. WHERE DRAWING SPACE PROHIBITS HASH MARKS BEING SHOWN REFER TO CIRCUIT NUMBERS AND PROVIDE REQUIRED NUMBER OF CONDUCTORS PER CIRCUIT TYPE.
	CONDUIT RUN CONCEALED IN OR BELOW FLOOR SLAB, OR UNDERGROUND.
A-2,4,6	HOMERUN TO PANELBOARD, LETTER OR LETTERS INDICATE PANELBOARDS, NUMBERS INDICATE CIRCUIT NUMBERS.
	L.E.D. FIXTURE, SURFACE OR STEM MOUNTED.
	L.E.D. LIGHTING FIXTURE, SURFACE WALL BRACKET MOUNTED. MOUNTING HEIGHT AS NOTED.
J	JUNCTION BOX LOCATED ABOVE CEILING OR BELOW GRADE.
	DUPLEX CONVENIENCE OUTLET MOUNTED ABOVE COUNTER, AT +48" TO CENTERLINE OF OUTLET.
	DUPLEX CONVENIENCE OUTLET, GFI TYPE. +18" TO CENTER LINE UNLESS OTHERWISE NOTED. "WP" WHERE SHOWN INDICATES WEATHER-RESISTENT DEVICE WITH METAL IN-USE WEATHERPROOF COVER.
	DUPLEX CONVENIENCE OUTLET, GFI TYPE. MOUNTED ABOVE COUNTER AT +46" TO CENTERLINE OF RECEPTACLE UNLESS NOTED OTHERWISE, "WP" WHERE SHOWN INDICATES WEATHER-RESISTENT DEVICE WITH METAL IN-USE WEATHERPROOF COVER.
	SINGLE POLE TOGGLE SWITCH, +46" TO CENTER LINE MOUNTING HEIGHT.
	PANELBOARD, SEE SCHEDULE.
	DISCONNECT SWITCH, SIZE AS NOTED ON DRAWINGS. FUSED PER MANUFACTURER'S NAME PLATE DATA OF EQUIPMENT SERVED.
GA	GENERATOR REMOTE ANNUNCIATOR. FLUSH RECESSED MOUNTED.

GENERAL NOTES:

1. DO NOT SCALE DRAWINGS TO LOCATE EQUIPMENT OR OUTLETS.
2. MOUNTING HEIGHTS AS INDICATED ON THE DRAWINGS SHALL BE FROM THE FINISHED FLOOR TO THE CENTER LINE OF THE OUTLET BOX.
3. THE ELECTRICAL DRAWINGS ARE ONLY A PART OF THE CONTRACT DOCUMENTS. ALL OF THE DRAWINGS AND SPECIFICATIONS MUST BE REVIEWED FOR THEIR INTERRELATIONSHIP AND REQUIRED COORDINATION BETWEEN DISCIPLINES.
4. ALL CONDUIT ROUTED FROM DISCONNECT TO EXTERIOR HVAC UNITS SHALL BE ROUTED UNDERGROUND. TURN UP ADJACENT TO UNIT AND MAKE TRANSITION TO SEALTITE TO SERVE UNIT. CONDUIT SHALL BE. ROUTED CONCEALED IN WALL.
5. ALL FLUSH RECESSED OUTLET BOXES SHALL BE INSTALLED SUCH THAT FRONT EDGE OF BOX WILL NOT BE SET BACK OF THE FINISHED SURFACE MORE THAN 1/4" IN ORDER TO COMPLY WITH N.E.C. 314-20. SUPPORT OF OUTLET BOX BY RECEPTACLE AND COVERPLATE IS NOT ACCEPTABLE.
6. ALL CONDUIT, OUTLET BOXES, AND LOW VOLTAGE CABLING SHALL BE APPROPRIATELY SUPPORTED THROUGHOUT THE PROJECT. SUPPORT OF THESE ITEMS BY CEILING GRID OR GRID SUPPORT WIRES IS NOT ACCEPTABLE.
7. ALL RECEPTACLES LOCATED WITHIN 6'-0"TO THE EDGE SINK OR OTHER WATER SOURCE SHALL BE GFCI TYPE DEVICE IN ACCORDANCE WITH N.E.C 210-8.A.7. COORDINATE LOCATIONS WITH ARCHITECTURAL AND PLUMBING DRAWINGS PRIOR TO ROUGH-IN.
8. COORDINATE EXACT LOCATION OF ALL MECHANICAL AND PLUMBING EQUIPMENT WITH DIVISION 23 PRIOR TO ROUGH IN. ADJUST LOCATION OF DISCONNECTING MEANS AND BRANCH CIRCUITRY AS REQUIRED.
9. ALL UNISTRUT MATERIAL SHALL BE MADE OF GRADE 304 OR 316 STAINLESS STEEL.
10. ALL FASTENERS USED IN THE CONSTRUCTION OF CHEMICAL FEED SYSTEM SHALL BE 304 OR 316 STAINLESS STEEL (INSTALLED WITH ANTI-GALLING COMPOUND ON FASTENERS 5/6 OR 8MM AND LARGER).
11. ALL FIELD DEVICES WITH A VISIBLE DISPLAY SHALL BE MOUNTED IN A NEMA 4X LOCKABLE ENCLOSURE.
12. ALL FIELD ENCLOSURES AND JUNCTION BOXES SHALL BE SEALED WITH GROMMET TYPE REUSABLE SEALS.
13. ALL EXTERIOR JUNCTION BOXES SHALL BE NEMA 4X RATED.
14. ALL EXTERIOR ELECTRICAL PANELBOARDS, TRANSFORMERS, DISCONNECTS, RECEPTACLES, AND SWITCHES SHALL BE NEMA 4X RATED.
15. CONTRACTOR SHALL PROVIDE CONDUIT AND BACKBOXES FOR ALL DEVICES AND WIRING. COORDINATE ALL CONTROL CABLING CONNECTIONS AND REQUIREMENTS WITH CONTROLS INSTALLER PRIOR TO ROUGH IN.
16. ALL EXPOSED EXTERIOR CONDUIT, RACEWAYS, AND SUPPORTS MEMBERS SHALL BE ALUMINUM.
17. COORDINATE EXACT LOCATION OF ALL DEVICES THAT REQUIRE CONTROL CABLING WITH MANUFACTURER PRIOR TO INSTALLATION.
18. ENSURE CONDUIT CONNECTIONS TO JUNCTION BOXES ARE MADE IN SUCH A WAY AS TO MAINTAIN THE 4X RATING OF THE JUNCTION BOX.
19. CONTRACTOR SHALL REFER TO DETAIL SHEETS FOR ALL MOUNTING REQUIREMENTS FOR ALL DEVICES AND EQUIPMENT. ALL EQUIPMENT LOCATED OUTDOORS SHALL BE PROVIDED WITH STAINLESS STEEL RACK AND ALL OTHER REQUIRED MOUNTING HARDWARE AS OUTLINED IN DETAILS AS REQUIRED FOR MOUNTING OF EQUIPMENT AND DEVICES.

LIGHTING FIXTURE SCHEDULE

TYPE	DESCRIPTION	WATTS	LUMENS	COLOR TEMP	MANUFACTURERS	NOTES
A	LED 4' STRIP LIGHT FIXTURE SURFACE MOUNTED WITH RIBBED FROSTED ACRYLIC ENCLOSED AND GASKETED LENS, NEMA 4X HOUSING AND WHITE FINISH.	34 W	3900	4000 K	COLUMBIA "LXEM" SERIES OR EQUAL	
B	L.E.D. WALL MOUNTED FIXTURE, DIE-CAST WALL PACK, GLASS REFRACTOR. TYPE III DISTRIBUTION.	30 W	4370	4000 K	HUBBELL"WGH2" SERIES OR EQUAL	
C	LED SURFACED MOUNTED FLOOD LIGHT WITH TWO DIE-CAST ALUMINUM HEADS, TEMPER GLASS LENSES, AND WHITE FINISH.	27 W	2100	4000 K	HUBBELL "MARSHAL" SERIES OR EQUAL	

GENERAL NOTES:

A. ALL LUMENS LISTED ARE DELIVERED LUMENS. ALL EQUALS TO SPECIFIED SHALL NOT BE ANY LOWER THAN 5% OF SPECIFIED LUMENS NOR WATTAGE BE HIGHER THAN 15% OF SPECIFIED WATTAGE.

B. LISTING OF MANUFACTURERS DOES NOT EQUAL AUTOMATIC APPROVAL. ALL CHARACTERISTICS NOTED IN DESCRIPTION SECTION MUST BE MET IN ORDER TO BE APPROVED. WHERE VENDOR / REP DOES NOT HAVE ONE OF MANUFACTURERS LISTED, PRIOR APPROVAL IS REQUIRED TO BE SUBMITTED TO ENGINEER TEN (10) DAYS PRIOR TO BID.

C. ALL FIXTURE VOLTAGES SHALL BE MULTIVOLT TYPE UNLESS OTHERWISE NOTED.

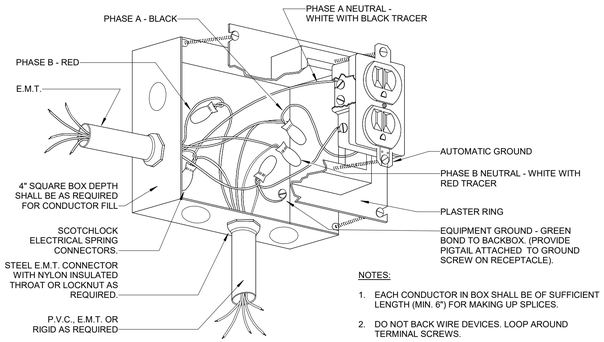

NOTES:

1. EACH CONDUCTOR IN BOX SHALL BE OF SUFFICIENT LENGTH (MIN. 6") FOR MAKING UP SPLICES.
2. DO NOT BACK WIRE DEVICES. LOOP AROUND TERMINAL SCREWS.
3. FACE OF PLASTER RING SHALL BE FLUSH WITH WALL.

1 / E1.0 DETAIL - RECEPTACLE CONNECTION
NO SCALE

PANELBOARD: MDP

LOCATION:
MOUNTING: SURFACE NEMA 1
MAIN DEVICE: 225.0 A MAIN CB
BUS AMPS: 225 AMPS
VOLTAGE: 480Y/277 V. 3 ø 4 W.
A.I.C. RATING: 42,000 AMPS SYMMETRICAL
SPECIAL:
FED FROM: ATS-MDP

LOAD NAME	NOTE	BKR	P	CKT	A	B	C	CKT	P	BKR	NOTE	LOAD NAME
SPARE		20 A	1	1	0.0 0.5			2	1	20 A		LIGHTING
SPARE		20 A	1	3	0.0 0.0			4	1	20 A		SPARE
SPARE		20 A	1	5		0.0 0.0		6	1	20 A		SPARE
SPARE		20 A	1	7	0.0 0.0			8	1	20 A		SPARE
SPARE		20 A	1	9	0.0 0.0			10	1	20 A		SPARE
SPARE		20 A	1	11		0.0 0.0		12	1	20 A		SPARE
TRANSFORMER T-LA		30 A	3	13	5.4 0.0			14				
				15	6.1 0.0			16	3	50 A		SPARE
				17		6.2 0.0		18				
WW CONTROL PANEL		30 A	3	19	3.0 9.5			20				
				21	3.0 9.5			22	3	50 A		HW CONTROL PANEL
				23		3.0 9.5		24				
IWH-1		125 A	3	25	22.5 0.0			26				
				27	22.5 0.0			28	3	40 A		SPD
				29		22.5 0.0		30				
		TOTAL LOAD:			40 kVA	40 kVA	40 kVA					
		TOTAL AMPS:			144 A	145.9 A	146 A					

LOAD CLASSIFICATION	CONNECTED	DEMAND	ESTIMATED	PANEL TOTALS	
HVAC	41779 VA	100.00%	41779 VA		
RECEPTACLES	4320 VA	100.00%	4320 VA	CONNECTED LOAD:	120750 VA
MTR	77174 VA	121.96%	94118 VA	ESTIMATED DEMAND:	137575 VA
LITES	474 VA	125.00%	592 VA	CONNECTED CURRENT:	145.2 A
				EST. DEMAND CURRENT:	165.5 A

NOTES:

PANELBOARD: LA

LOCATION:
MOUNTING: SURFACE NEMA 1
MAIN DEVICE: 100.0 A MAIN CB
BUS AMPS: 100 AMPS
VOLTAGE: 208Y/120 V. 3 ø 4 W.
A.I.C. RATING: 10,000 AMPS SYMMETRICAL
SPECIAL:
FED FROM: T-LA

LOAD NAME	NOTE	BKR	P	CKT	A	B	C	CKT	P	BKR	NOTE	LOAD NAME
SCADA PANEL		20 A	1	1	0.0 1.7			2				
RECEPTACLES		20 A	1	3		0.5 1.7		4	2	25 A		HPU/ACU-1
SH-(1-4)		20 A	1	5			0.8 1.7	6				
EF-(1-3)		15 A	1	7	0.5 1.7			8	2	25 A		HPU/ACU-2
FL-(1-4)		20 A	1	9		0.8 3.0		10				
RECEPTACLES		20 A	1	11			0.4 3.0	12	2	40 A		HPU/ACU-3
RECEPTACLES		20 A	1	13	0.4 0.1			14				
BATTERY CHARGER		20 A	1	15		0.0 0.1		16	2	30 A		DATA RECEPTACLE
BLOCK HEATER		30 A	1	17			0.0 0.4	18	1	20 A		CF-CP
SPARE		20 A	1	19	0.0 0.0			20	1	20 A		SPARE
SPARE		20 A	2	21		0.0 0.0		22	1	20 A		SPARE
				23			0.0 0.0	24	1	20 A		SPARE
SPARE		30 A	3	25	0.0 0.0			26				
				27		0.0 0.0		28	3	40 A		SPD
				29			0.0 0.0	30				
		TOTAL LOAD:			4 kVA	6 kVA	6 kVA					
		TOTAL AMPS:			37 A	52.9 A	54 A					

LOAD CLASSIFICATION	CONNECTED	DEMAND	ESTIMATED	PANEL TOTALS	
HVAC	13179 VA	100.00%	13179 VA		
RECEPTACLES	3240 VA	100.00%	3240 VA	CONNECTED LOAD:	16659 VA
MTR	504 VA	108.33%	546 VA	ESTIMATED DEMAND:	16701 VA
				CONNECTED CURRENT:	46.2 A
				EST. DEMAND CURRENT:	46.4 A

NOTES:

ESG ENGINEERING
6400 Peake Rd
Macon, GA 31210
Ph: (478) 474-4600
Fax: (478) 474-5045

GROUNDWATER WELLS #4 & #5
FOR THE
CITY OF FLOWERY BRANCH

REVISIONS

NO.	DESCRIPTION	DATE
3	REV 3	12-10-25

PERMIT SET

GEORGIA REGISTERED NO. 038816 PROFESSIONAL ENGINEER BRIAN W. NEWLAND

DRAWN BY: CT
CHECKED BY: BN
DATE: OCT 2025
SCALE: AS SHOWN

CONTENT:
LEGEND, NOTES, DETAILS, AND FIXTURE SCHEDULE

SHEET NO:
E1.0

EDC
ELECTRICAL DESIGN CONSULTANTS
ELECTRICAL ENGINEERS
AUGUSTA OFFICE - PROJECT #: 25173
edc1973.com

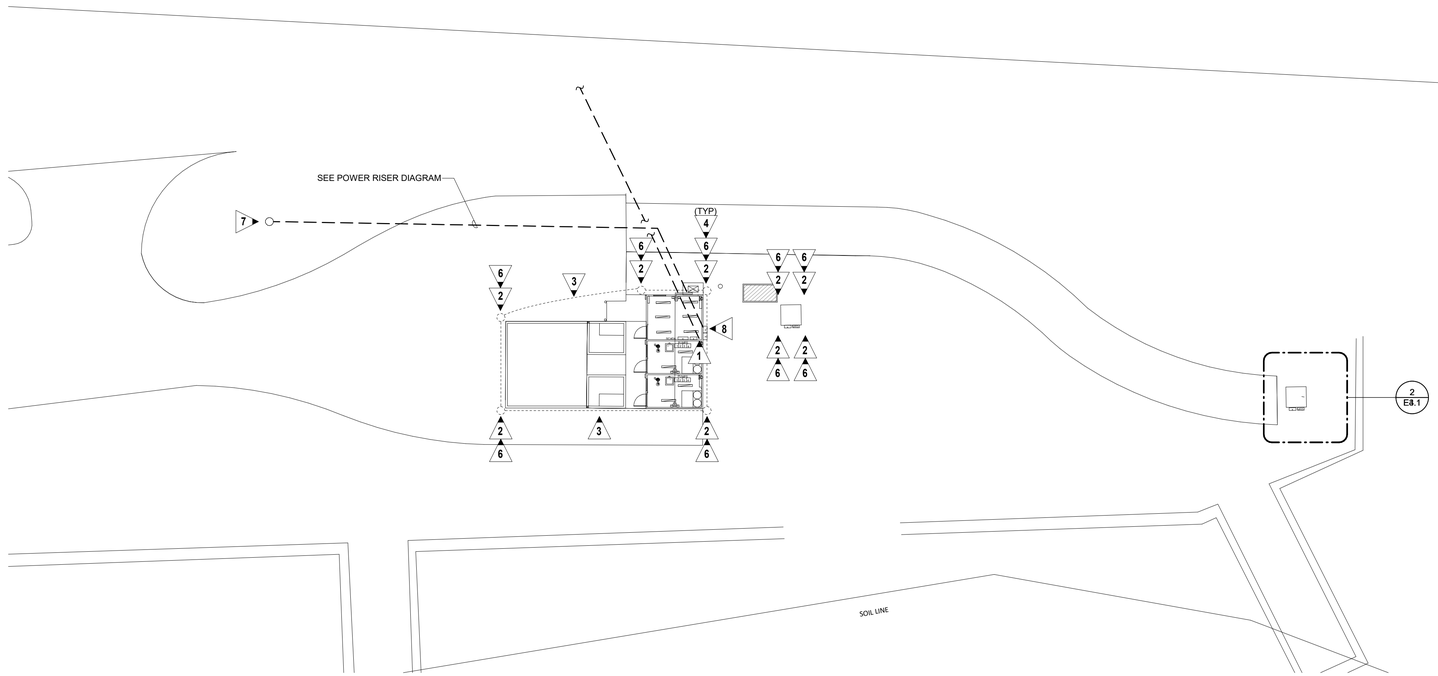

1 E1.1 ELECTRICAL SITE PLAN
SCALE: 1/16" = 1'-0"

GENERAL NOTES:

1. DIVISION 26 TO COORDINATE EXACT LOCATION OF UTILITY TRANSFORMER WITH POWER COMPANY PRIOR TO BID. DIVISION 26 SHALL COORDINATE EXACT ROUTING OF UNDERGROUND PRIMARY CONDUCTORS WITH POWER COMPANY PRIOR TO BID. NO ADDITIONAL COST SHALL BE INCURRED BY THE OWNER DUE TO THE LACK OF COORDINATION BY THE CONTRACTOR.
2. PROVIDE MARKING TAPE OVER ALL CONDUITS OUTSIDE OF BUILDING FOOTPRINT.
3. SURVEY AND SITE INFORMATION PROVIDED BY OTHERS. VERIFY ALL CONDITIONS ON SITE AND WITH OFFICIAL SURVEYS AND OTHERS TRADE.
4. CALL UNDERGROUND UTILITY CENTER AND VERIFY ALL UNDERGROUND UTILITIES.
5. UNDERGROUND CONDUIT SHALL BE SCHEDULE 40 PVC, UNLESS NOTED OTHERWISE.
6. CONTRACTOR SHALL STAKE-OFF ALL EXISTING UTILITIES PRIOR TO ROUGH-IN. ALL NEW INSTALLATION SHALL BE COORDINATION WITH EXISTING UTILITY LOCATIONS.
7. PROVIDE HANDHOLES AS REQUIRED BY NEC.

KEYED NOTES:

1. STUB OUT (2) 2" EMPTY CONDUITS WITH PULL STRINGS FOR FIBER. COORDINATE EXACT LOCATION AND REQUIREMENTS WITH TELCO COMPANY.
2. PROVIDE GROUND ROD AT LOCATION SHOWN. CONNECT GROUND ROD TO BUILDING STEEL AT CORNER. NUMBER AS REQUIRED FOR TOTAL RESISTANCE OF 25 OHMS. GROUND RODS SHALL BE 3/4" X 10'-0" COPPER CLAD STEEL. CONNECTION TO ALL GROUND RODS SHALL BE BY EXOTHERMIC WELD.
3. PROVIDE GROUND RING 30" BELOW GRADE WITH WARNING TAPE LOCATE 12" BELOW GRADE. CONSTRUCT GROUND RING WITH 1/0 AWG BARE COPPER WIRE.
4. MAKE GROUNDING CONNECTION WITH 1/0 AWG COPPER WIRE TO EQUIPMENT AS SHOWN. TYPICAL FOR ALL GROUNDING CONNECTIONS SHOWN.
5. COORDINATE EXACT GROUND RING BURIAL PATHING WITH CIVIL.
6. PROVIDE GROUND ROD ENCLOSURE WITH REMOVABLE CAP.
7. APPROXIMATE LOCATION OF GEORGIA POWER POLE MOUNTED TRANSFORMER. COORDINATE EXACT LOCATION WITH CIVIL PLANS.
8. APPROXIMATE LOCATION OF ELECTRICAL SERVICE DISCONNECT. SEE SHEET E3.1 FOR EXACT LOCATION AND SHEET E5.1 FOR CONDUIT AND CONDUCTOR REQUIREMENTS. COORDINATE EXACT ROUTING WITH CIVIL PLANS PRIOR TO ROUGH IN.

ESG ENGINEERING
6400 Peake Rd
Macon, GA 31210
Ph.: (478) 474-4496
Fax: (478) 474-5045

GROUNDWATER WELLS #4 & #5

FOR THE
CITY OF FLOWERY BRANCH

REVISIONS

NO.	DESCRIPTION	DATE
3	REV 3	12-10-25

PERMIT SET

GEORGIA REGISTERED NO. 038816 PROFESSIONAL ENGINEER BRIAN W. NEWLAND

DRAWN BY: CT
CHECKED BY: BN
DATE: OCT 2025
SCALE: AS SHOWN

CONTENT:
ELECTRICAL SITE PLAN

SHEET NO:
E1.1

EDC
ELECTRICAL DESIGN CONSULTANTS
ELECTRICAL ENGINEERS
AUGUSTA OFFICE - PROJECT #: 25173
edc1973.com

GENERAL NOTES:

1. ALL EQUIPMENT/RACEWAYS SHALL BE SUITABLE FOR THE ENVIRONMENT IN WHICH IT IS INSTALLED.

KEYED NOTES:

1 ▶ PROVIDE DIE-CAST WEATHERPROOF JUNCTION BOX WITH LIGHT SWITCH AND WEATHERPROOF COVER TO CONTROL DESIGNATED LIGHT FIXTURE.

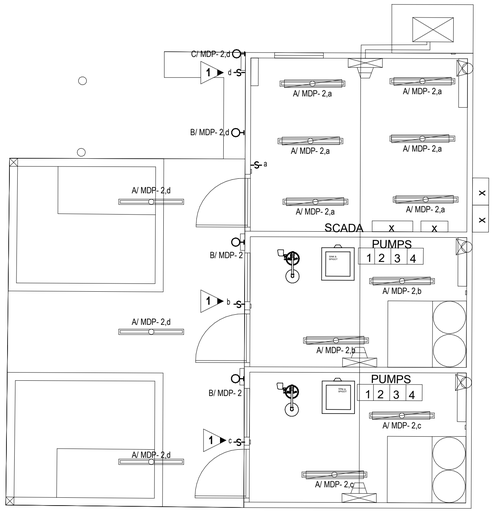

1 LIGHTING PLAN
E2.1 SCALE: 1/4" = 1'-0"

LIGHT FIXTURE DESIGNATION DESCRIPTION

EXAMPLE: B/HA1-1,b

- PANEL DESIGNATION:
- FIXTURE TYPE: TYPE "A" IF NO CAPITAL LETTER SHOWN
- CIRCUIT NUMBER:
- SWITCH LEG DESIGNATION WHEN MULTIPLE SWITCHES ARE IN SAME SPARE/AREA

B/ HA1 -1, b

ESG ENGINEERING
6400 Peake Rd
Macon, GA 31210
Ph: (478) 474-4995
Fax: (478) 474-5045

GROUNDWATER WELLS #4 & #5

FOR THE
CITY OF FLOWERY BRANCH

REVISIONS

NO.	DESCRIPTION	DATE
3	REV 3	12-10-25

PERMIT SET

GEORGIA REGISTERED NO. 038816 PROFESSIONAL ENGINEER BRYAN W. NEWLAND

DRAWN BY: CT
CHECKED BY: BN
DATE: OCT 2025
SCALE: AS SHOWN

CONTENT:
LIGHTING PLAN

SHEET NO:
E2.1

EDC
ELECTRICAL DESIGN CONSULTANTS
ELECTRICAL ENGINEERS
AUGUSTA OFFICE - PROJECT #: 25173
edc1973.com

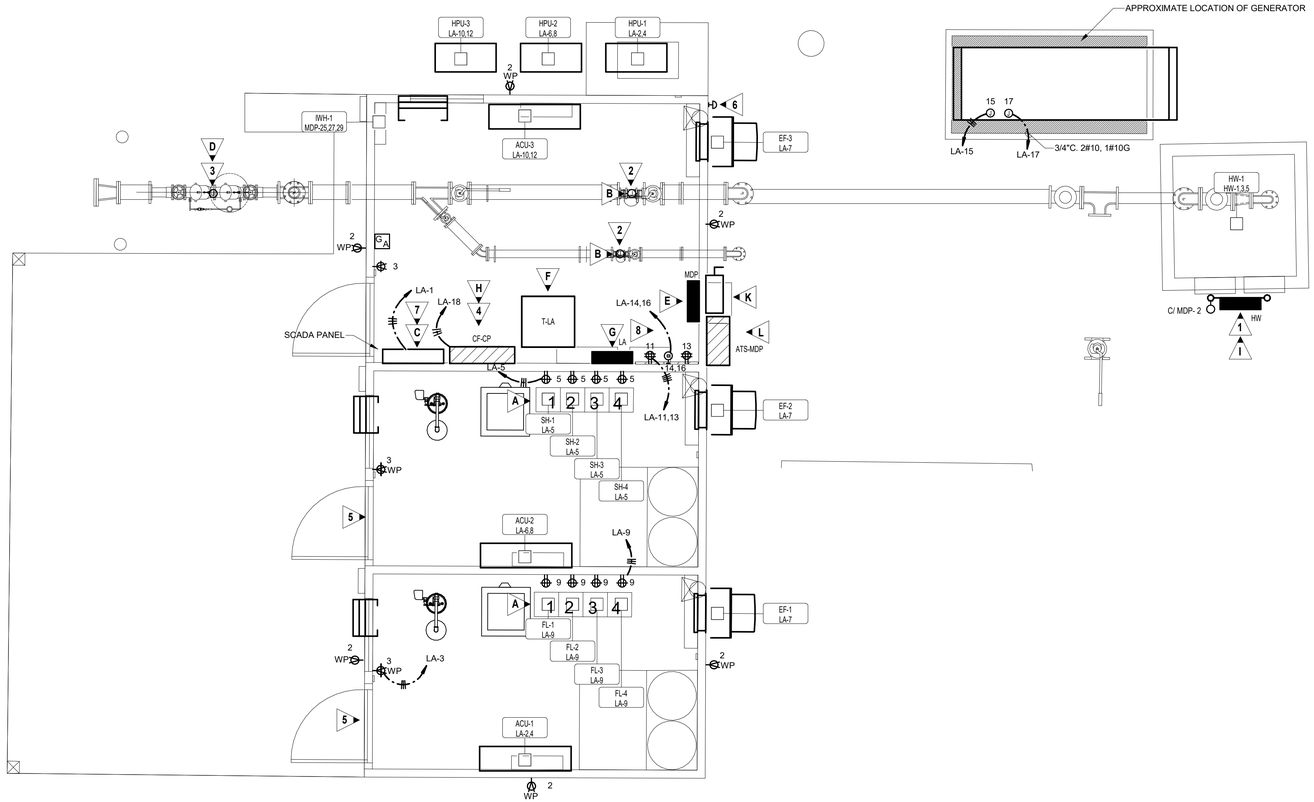

1 POWER PLAN
E3.1 SCALE: 3/8" = 1'-0"

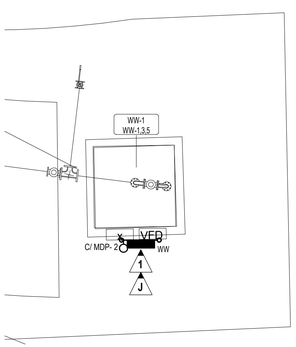

2 ELECTRICAL SITE PLAN - WATERSTONE WELL
E3.1 NO SCALE

MECHANICAL EQUIPMENT TAG DESCRIPTION

EXAMPLE: RAC-1 HR-7,9,11

EQUIPMENT ID:

MECHANICAL/ PLUMBING EQUIPMENT

PANEL - CIRCUIT NUMBER:

RAC-1 HR-7,9,11

NOTE: REFER TO MECHANICAL CONNECTION SCHEDULES FOR CIRCUITING INFORMATION

MECHANICAL CONNECTION SCHEDULE

ID	EQUIPMENT INFORMATION VOLT	PH	MCA	MOCP	CIRCUIT INFORMATION PANEL	NO.	APPARENT LOAD	CONDUIT & WIRE SIZE	NOTES	DISC TYPE	REMARKS
FANS											
EF-1	120 V	1	1.8 A	20.0 A	LA	7	168 VA	3/4"C,2#12,1#12G	A	MRS	-
EF-2	120 V	1	1.8 A	20.0 A	LA	7	168 VA	3/4"C,2#12,1#12G	A	MRS	-
EF-3	120 V	1	1.8 A	20.0 A	LA	7	168 VA	3/4"C,2#12,1#12G	A	MRS	-
HENDERSON WELL PUMP											
HW-1	480 V	3	43.0 A	45.0 A	HW	1,3,5	28600 VA	1"C,3#6,1#10G		CP	-
SPLIT SYSTEM OUTDOOR AIR UNITS											
HPU-1	208 V	1	21.0 A	25.0 A	LA	2,4	3494 VA	3/4"C,2#10,1#10G		FS	30/2/4X
HPU-2	208 V	1	21.0 A	25.0 A	LA	6,8	3494 VA	3/4"C,2#10,1#10G		FS	30/2/4X
HPU-3	208 V	1	36.0 A	40.0 A	LA	10,12	5990 VA	3/4"C,2#8,1#10G		FS	60/2/4X
SPLIT SYSTEMS INDOOR UNITS											
ACU-1	208 V	1	0.0 A	0.0 A	LA	2,4	0 VA		B	MRS	-
ACU-2	208 V	1	0.0 A	0.0 A	LA	6,8	0 VA		B	MRS	-
ACU-3	208 V	1	0.0 A	0.0 A	LA	10,12	0 VA		B	MRS	-
WATER HEATER											
IWH-1	480 V	3	101.6 A	125.0 A	MDP	25,27,29	67575 VA	1 1/2"C,3#1,1#6G		FS	200/3/3R
WATERSTONE WELL PUMP											
WW-1	480 V	3	13.8 A	20.0 A	WW	1,3,5	9145 VA	3/4"C,3#12,1#12G		CP	-

SCHEDULE NOTES:

A. INTERLOCK WITH WALL SWITCH (PROVIDED BY DIVISION 26). LOUVER SHALL FULLY OPEN PRIOR TO UNIT BEING ENERGIZED COORDINATE WITH DIVISION 23. COORDINATE ASSOCIATED LOUVERS WITH MECHANICAL PLANS PRIOR TO ROUGH IN. PROVIDE ALL RACEWAY AND CONDUCTORS FOR A COMPLETE AND OPERATIONAL SYSTEM.

B. "ACU" UNIT IS POWERED FROM "HPU" UNIT. PROVIDE 3/4"C., WITH PULLSTRING FROM "HPU" UNIT TO "ACU" UNIT FOR CONTROLS CABLING. PROVIDE MOTOR RATED SWITCH AT "ACU" UNIT IF POWERED AT 208VAC. IF POWERED AT 24VDC, MOTOR RATED SWITCH IS NOT REQUIRED. COORDINATE WITH MECHANICAL CONTRACTOR PRIOR TO ROUGH IN.

GENERAL NOTES:

1. ALL NEW CONDUIT, BOXES, AND SUPPORTS SHALL BE SCHEDULE 40 PVC, UNLESS NOTED OTHERWISE.
2. ALL FEEDER CONDUCTORS ARE BASED ON COPPER UNLESS OTHERWISE NOTED. CONTRACTOR SHALL BE RESPONSIBLE FOR PROVIDING LUGS ON ALL PANELS, BREAKERS, TRANSFORMERS, ETC. TO ACCOMMODATE CONDUCTOR SIZE SHOWN.
3. ALL EQUIPMENT/RACEWAYS SHALL BE SUITABLE FOR THE ENVIRONMENT IN WHICH IT IS INSTALLED.
4. PROVIDE CONTROLS TO ACTIVATE BOOSTER AND FLUORIDE PUMP WHEN WELL PUMP IS STARTED.
5. PRIOR TO PURCHASE COORDINATE CONTROLS WITH CITY OF FLOWERY BRANCH.

KEYED NOTES:

1. PROVIDE NEMA 4X CONTROL PANEL ON STAINLESS STEEL UNISTRUT RACK AS SHOWN. COORDINATE EXACT RACK REQUIREMENTS WITH CONTROL PANEL MANUFACTURER. REFER TO DETAIL 6/E5.1 FOR TYPICAL CONTROL PANEL RACK MOUNTING DETAIL.
2. PROVIDE (2) SHIELDED TWISTED PAIR CABLE IN 1/2"C. TO CONTROL PANEL FOR ULTRASONIC FLOW METER, EQUAL TO BELDEN 3043A OR AS PER CONTROL PANEL MANUFACTURER INSTALLATION DRAWINGS AND DETAILS.
3. PROVIDE (2) SHIELDED TWISTED PAIR CABLE IN 1/2"C. TO CONTROL/SCADA PANEL FOR DETECTOR ASSEMBLY, EQUAL TO BELDEN 3043A OR AS PER CONTROL/SCADA PANEL MANUFACTURER INSTALLATION DRAWINGS AND DETAILS.
4. SEE RISER DIAGRAM 2/E5.1 FOR CONNECTION REQUIREMENTS.
5. ALL CONDUIT, BOXES, AND SUPPORTS IN THIS SPACE SHALL BE SCHEDULE 40 PVC. SEAL ALL CONDUITS ENTERING THIS SPACE AGAINST MIGRATION OF ALL GAS WITH ELECTRICAL DUCT SEAL.
6. EMERGENCY SHUT OFF PUSH BUTTON FOR GENERATOR. PROVIDE NEMA 4X ENCLOSURE.
7. SCADA PANEL SHALL HAVE THE CAPABILITY TO COMMUNICATE WITH MAIN WATER PLANT VIA RADIO SIGNAL. COORDINATE EXACT SCADA REQUIREMENTS WITH THE CITY OF FLOWERY BRANCH STANDARDS.
8. PROVIDE 3/4"C. 2#10, 1#10G. FOR CIRCUIT

EQUIPMENT LIST:

- A CHEMICAL INJECTOR PUMPS
- B ULTRASONIC FLOW METER
- C SCADA PANEL
- D DETECTOR ASSEMBLY
- E PANEL MDP
- F TRANSFORMER T-LA
- G PANEL LA
- H CHEMICAL INJECTOR CONTROL PANEL
- I HENDERSON WELL CONTROL PANEL
- J WATERSTONE WELL CONTROL PANEL
- K SERVICE DISCONNECT
- L ATS-MDP

DISCONNECT TYPES

TYPE	FURNISH	DESCRIPTION
CP	-	CONTROL PANEL
CB	DIV. 26	DIV. 26 - CIRCUIT BREAKER
FS	DIV. 26	DIV. 26 - FUSED SWITCH
MRS	DIV. 26	DIV. 26 - MOTOR RATED SWITCH
NFS	DIV. 26	DIV. 26 - NON-FUSED SWITCH
NFS (M)	MANUF.	MANUF - NON-FUSED SWITCH

EDC
ELECTRICAL DESIGN CONSULTANTS
ELECTRICAL ENGINEERS
AUGUSTA OFFICE - PROJECT #: 25173
edc1973.com

ESG ENGINEERING
6400 Peake Rd
Macon, GA 31210
Ph: (478) 474-4406
Fax: (478) 474-5045

GROUNDWATER WELLS #4 & #5

FOR THE
CITY OF FLOWERY BRANCH

REVISIONS

NO.	DESCRIPTION	DATE
3	REV. 3	12-10-25

PERMIT SET

GEORGIA REGISTERED NO. 038816 PROFESSIONAL ENGINEER BRIAN W. NEWMAN

DRAWN BY: CT
CHECKED BY: BN
DATE: OCT 2025
SCALE: AS SHOWN

CONTENT:
POWER PLAN

SHEET NO:
E3.1

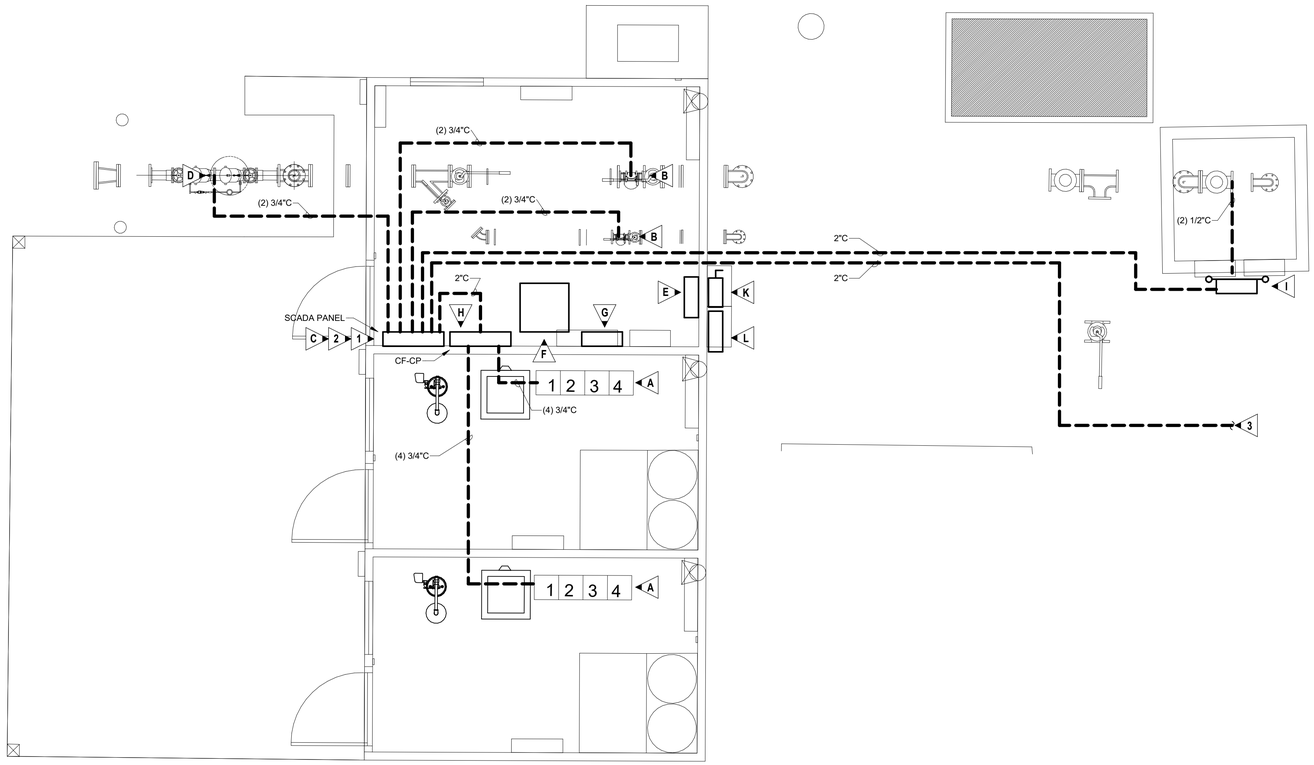

1 E4.1 SYSTEMS PLAN
SCALE: 3/8" = 1'-0"

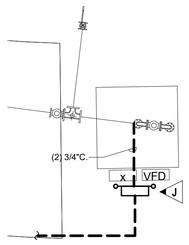

2 E4.1 SYSTEMS PLAN - WATERSTONE WELL
NO SCALE

GENERAL NOTES:

1. ALL EQUIPMENT/RACEWAYS SHALL BE SUITABLE FOR THE ENVIRONMENT IN WHICH IT IS INSTALLED.
2. PROVIDE CONTROLS TO ACTIVATE BOOSTER AND FLUORIDE PUMP WHEN WELL PUMP IS STARTED.
3. PRIOR TO PURCHASE COORDINATE CONTROLS WITH CITY OF FLOWERY BRANCH.

KEYED NOTES:

1. ALL CONDUIT ROUTINGS SHOWN ARE FOR DIAGRAMMATIC PURPOSES ONLY. COORDINATE EXACT ROUTING WITH CIVIL PLAN PRIOR TO ROUGH IN.
2. ROUTING SHOWN ARE TO PROVIDE CONDUIT SIZES AND CONNECTION POINTS ONLY. REFER TO RISER DIAGRAM ON SHEET E5.1 FOR CONDUCTOR/CABLING REQUIREMENTS FOR EACH CONDUIT.
3. CONDUIT TO CONTINUE TO WATERSTONE WELL. REFER TO 2/E4.1 FOR WELL LOCATION.

SCADA/CONTROLS NOTE:

CONTRACTOR SHALL EMPLOY THE SERVICES OF AN EXPERIENCED CONTROL SYSTEMS INTEGRATOR (CSI) TO PROVIDE SCADA IMPROVEMENTS AT THE NEW WELL SITE PLC AND WITHIN THE EXISTING CITY SCADA SYSTEM (AT THE WASTEWATER TREATMENT PLANT) AND IN THE EXISTING RTU/PANEL AT THE EXISTING/OFFSITE BOOSTER STATION. THE CITY'S CURRENT BOOSTER PUMPS RUN OFF A SCADA-READ, PRESSURE GAUGE SIGNAL TRANSMITTED VIA RADIO THAT IS CORRELATED TO ELEVATED TANK LEVEL (BOOSTER PUMPS TURN ON WHEN TANK LEVEL = 7' BELOW FULL AND TURN OFF WHEN TANK LEVEL = 1' BELOW FULL). AT THE NEW WELL SITE PLC, CONTRACTOR SHALL PROVIDE A PROGRAMMABLE LOGIC CONTROLLER (PLC) CAPABLE OF RECEIVING I/O'S AND RELAYS FROM THE NEW SUBMERSIBLE WELL PUMPS, NEW FLOW METERS, AND FROM THE OFFSITE PRESSURE GAUGE SIGNAL (RADIO). THE NEW SYSTEM SHALL BE CAPABLE OF STARTING THE NEW WELL PUMPS AT AN OPERATOR-SPECIFIED TANK LEVEL (SUCH AS 6' BELOW FULL), AND THE PUMPS SHALL RUN FOR EITHER A SET DURATION OR UNTIL A TOTALIZED FLOW HAS BEEN ACCUMULATED (SUCH AS 50,000 GPD, PER THE PROPOSED FLOW METERS). THE NEW WELL PUMPS SHALL ALTERNATE OPERATIONS SUCH THAT BOTH THE WATERSTONE AND HENDERSON PUMPS DO RUN CONCURRENTLY, AND THE NEW WELL PUMPS SHALL NOT RUN WHILE THE EXISTING OFFSITE BOOSTER PUMPS ARE RUNNING. CONTRACTOR/CSI SHALL INCORPORATE NEW RELAYS FROM THE NEW WELL PUMPS, NEW FLOW METERS, AND NEW RELAYS FROM THE EXISTING BOOSTER STATION INTO THE CITY'S EXISTING SCADA SYSTEM. PROVIDE ALL EQUIPMENT, CABLING, DEVICES, ETC. FOR A COMPLETE AND OPERATIONAL SCADA SYSTEM.

EQUIPMENT LIST:

- A ▶ CHEMICAL INJECTOR PUMPS
- B ▶ ULTRASONIC FLOW METER
- C ▶ SCADA PANEL
- D ▶ DETECTOR ASSEMBLY
- E ▶ PANEL MDP
- F ▶ TRANSFORMER T-LA
- G ▶ PANEL LA
- H ▶ CHEMICAL INJECTOR CONTROL PANEL
- I ▶ HENDERSON WELL CONTROL PANEL
- J ▶ WATERSTONE WELL CONTROL PANEL
- K ▶ SERVICE DISCONNECT
- L ▶ ATS-MDP

EDC
ELECTRICAL DESIGN CONSULTANTS
ELECTRICAL ENGINEERS
AUGUSTA OFFICE - PROJECT #: 25173
edc1973.com

ESG ENGINEERING
6400 Peake Rd
Macon, GA 31210
Ph: (478) 474-4495
Fax: (478) 474-5045

GROUNDWATER WELLS #4 & #5

FOR THE
CITY OF FLOWERY BRANCH

REVISIONS

NO.	DESCRIPTION	DATE
3	REV 3	12-10-25

PERMIT SET

GEORGIA REGISTERED NO. 038816 PROFESSIONAL ENGINEER BRIAN W. NEWLAND

DRAWN BY: CT
CHECKED BY: BN
DATE: OCT 2025
SCALE: AS SHOWN

CONTENT:
SYSTEMS PLAN

SHEET NO:
E4.1

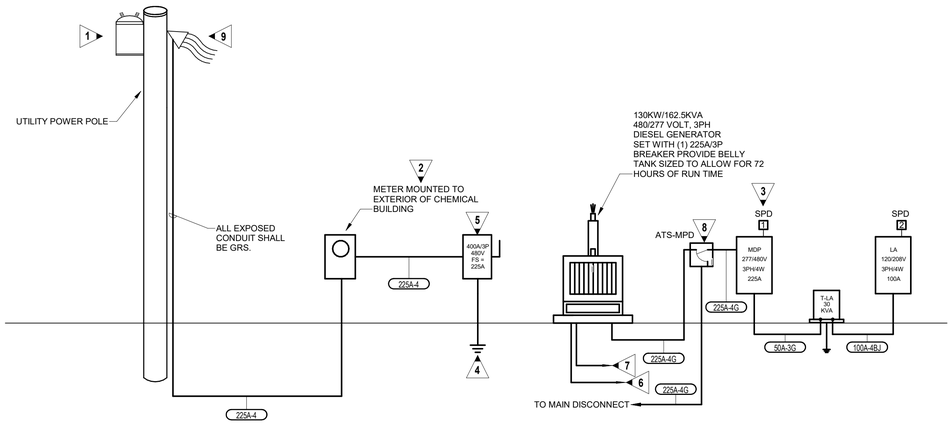

1 POWER RISER DIAGRAM
E5.1 NO SCALE

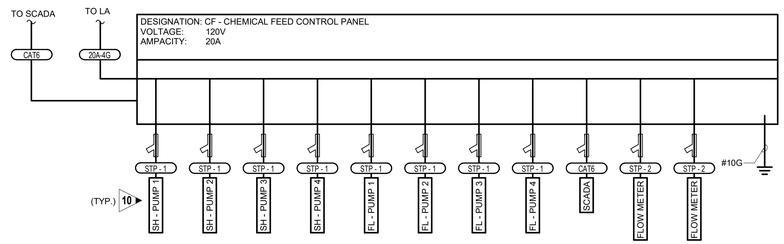

2 POWER RISER DIAGRAM - CF CONTROL PANEL
E5.1 NO SCALE

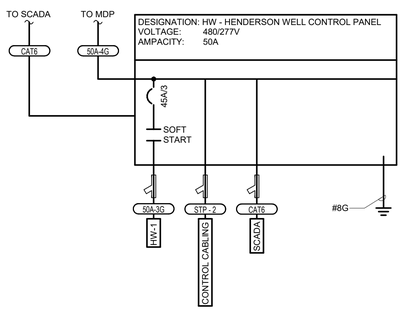

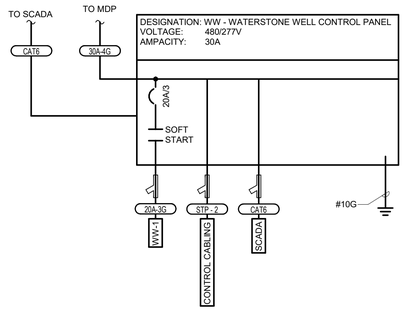

3 POWER RISER DIAGRAM - CONTROL PANEL
E5.1 NO SCALE

KEYED NOTES:

1. NEW UTILITY POLE MOUNTED TRANSFORMERS TO BE PROVIDED AND INSTALLED BY UTILITY COMPANY.
2. METER BY UTILITY COMPANY, INSTALLED BY CONTRACTOR.
3. CONTRACTOR SHALL FIELD MARK SERVICE EQUIPMENT IN ACCORDANCE WITH NEC 110.24 IN REGARD TO MAXIMUM AVAILABLE FAULT CURRENT. MARKING SHALL CLEARLY DENOTE MAXIMUM AVAILABLE FAULT CURRENT AND INCLUDE THE DATE THE FAULT CURRENT CALCULATION WAS PERFORMED. DIVISION 26 SHALL BE RESPONSIBLE FOR OBTAINING AVAILABLE FAULT CURRENT AT TRANSFORMER FROM LOCAL UTILITY. PERFORM CALCULATIONS BASED ON SUCH.
4. SEE DETAIL 1/E6.0 FOR SERVICE GROUNDING AND BONDING PLATE DETAIL.
5. 400A, 3 POLE SERVICE ENTRANCE RATED DISCONNECT FUSED DOWN TO 225A. DISCONNECT SHALL BE NEMA 4X RATED. PROVIDE WITH NEUTRAL BAR AND EQUIPMENT GROUND BAR. INSTALL BONDING JUMPER AT DISCONNECT.
6. 1 1/4"C., TO REMOTE GENERATOR ANNUNCIATOR SEE MANUFACTURER'S PUBLISHED DATA FOR NUMBER OF CONDUCTORS REQUIRED. SEE SHEET E3.1 FOR LOCATION OF ANNUNCIATOR.
7. 2-1"C., TO AUTOMATIC TRANSFER SWITCH FOR CONTROL WIRES
8. 225A, 3 POLE, NEMA 4X, SOLID NEUTRAL TIME DELAYED AUTOMATIC TRANSFER SWITCH.
9. NEW WEATHERHEAD TO BE PROVIDED AND INSTALLED BY DIVISION 26. 10' OF SLACK CONDUCTORS SHALL BE PROVIDED FOR UTILITY COMPANY TO CONNECT TO POLE MOUNTED UTILITY TRANSFORMER.
10. CHEMICAL INJECTOR PUMP TO BE POWERED BY 120V RECEPTACLE. SEE SHEET E3.1 FOR CONNECTION REQUIREMENTS. TYPICAL FOR ALL PUMPS CONNECTED TO CONTROL PANEL.

SPD SCHEDULE

TYPE	DESCRIPTION	NOTES
1	MAIN DISTRIBUTION PANEL (277/480 VOLTS, 3 PHASE) - 300,000 AMP RATED	1
2	DISTRIBUTION PANEL (120/208 VOLTS, 3 PHASE) - 80,000 AMP RATED	1

SCHEDULE NOTES:

1. SEE SPECIFICATIONS FOR DETAILS.

FEEDER SCHEDULE

DESIGNATION	CONDUIT & CONDUCTORS
20A-3G	3/4" C - 2#12, 1#12G
20A-4G	3/4" C - 3#12, 1#12G
30A-4G	1" C - 4#10, 1#10G
50A-3G	1" C - 3#8, 1#10G
50A-4G	1" C - 4#8, 1#10G
100A-4BJ	2" C - 4#2, 1#8G
225A-4	2.5" C - 4#4/0
225A-4G	2.5" C - 4#4/0, 1#4G
CAT6	2" C - CAT6 CABLE
STP - 1	3/4" C -SHIELDED TWISTED PAIR
STP - 2	[2] 3/4" C -SHIELDED TWISTED PAIR

200A - 4 G - N — FEEDER DESIGNATION

- (N) - INDICATES 200% NEUTRAL CONDUCTOR
- GROUND CONDUCTORS:
  - (0) - NO GROUND
  - (G) - EQUIPMENT OR ISOLATED GND
  - (BJ) - GROUNDING ELECTRODE
  - (BJIG) - GROUNDING ELECTRODE AND ISOLATED GND
- SYSTEM DESCRIPTION:
  - (3) - 1Ø 3W OR 3Ø 3W
  - (4) - 3Ø, 4W
- CONDUCTOR AMPACITY:
  - (AL) - INDICATES ALUMINUM CONDUCTORS

EDC
ELECTRICAL DESIGN CONSULTANTS
ELECTRICAL ENGINEERS
AUGUSTA OFFICE - PROJECT #: 25173
edc1973.com

ESG ENGINEERING
6400 Peake Rd
Macon, GA 31210
Ph.: (478) 474-4696
Fax: (478) 474-5045

GROUNDWATER WELLS #4 & #5

FOR THE
CITY OF FLOWERY BRANCH

REVISIONS

NO.	DESCRIPTION	DATE
3	REV 3	12-10-25

PERMIT SET

GEORGIA REGISTERED NO. 038816 PROFESSIONAL ENGINEER JONATHAN W. NEWLIN

DRAWN BY: CT
CHECKED BY: BN
DATE: OCT 2025
SCALE: AS SHOWN

CONTENT:
POWER RISER DIAGRAM

SHEET NO:
E5.1

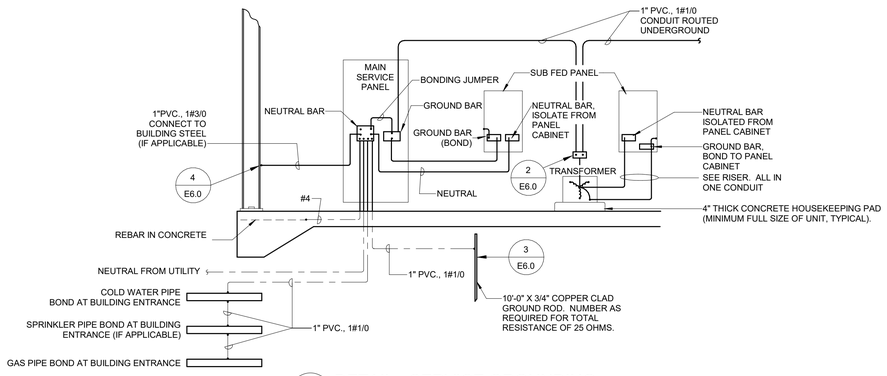

1 E6.0 DETAIL - SERVICE GROUNDING
NO SCALE

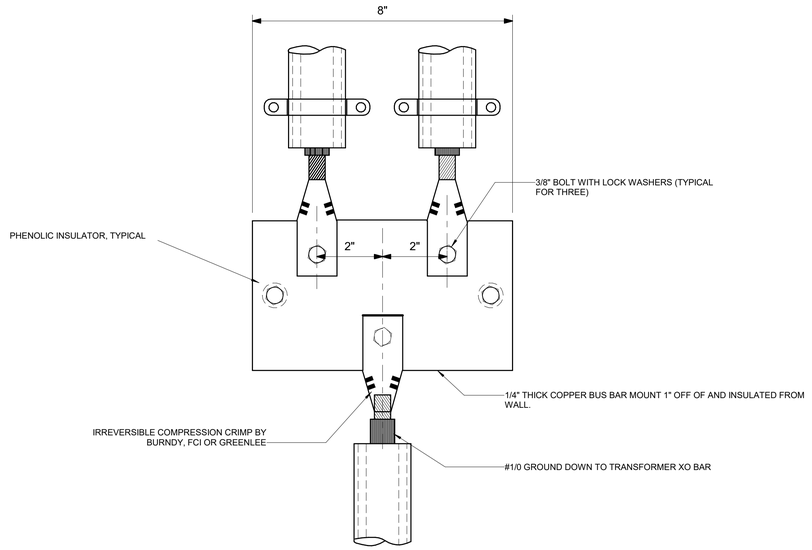

2 E6.0 DETAIL - GROUND CABLE TO BUS BAR
NO SCALE

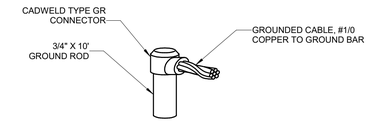

3 E6.0 DETAIL - CABLE CONNECTION TO GROUND ROD
NO SCALE

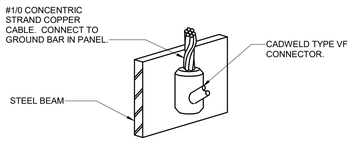

4 E6.0 DETAIL - CABLE CONNECTION TO STEEL BEAM
NO SCALE

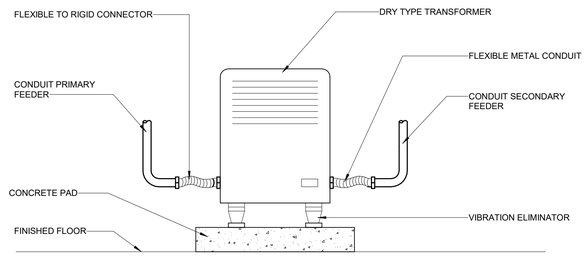

5 E6.0 DETAIL - FLOOR MOUNTED TRANSFORMER
NO SCALE

ESG ENGINEERING
6400 Peake Rd
Macon, GA 31210
Ph.: (478) 474-4996
Fax: (478) 474-5045

GROUNDWATER WELLS #4 & #5

FOR THE
CITY OF FLOWERY BRANCH

REVISIONS

NO.	DESCRIPTION	DATE
3	REV 3	12-10-25

PERMIT SET

GEORGIA REGISTERED NO. 038816 PROFESSIONAL ENGINEER BRYAN W. NEWLAND

DRAWN BY: CT
CHECKED BY: BN
DATE: OCT 2025
SCALE: AS SHOWN

CONTENT:
ELECTRICAL DETAILS

SHEET NO:
E6.0

EDC
ELECTRICAL DESIGN CONSULTANTS
ELECTRICAL ENGINEERS
AUGUSTA OFFICE - PROJECT #: 25173
edc1973.com

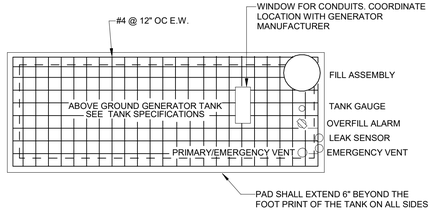

1 E6.1 DETAIL - GENERATOR CONCRETE PAD AND FUEL TANK - PLAN VIEW
NO SCALE

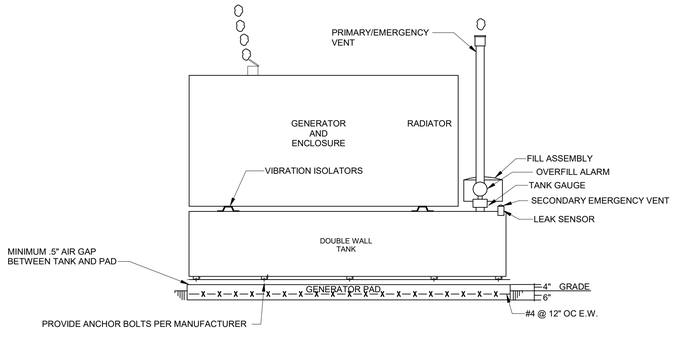

TANK SPECIFICATIONS

PRIMARY TANK SHALL BE MINIMUM 10 GAUGE STEEL, UL142 LABEL AND HAVE THE FOLLOWING:

- FUEL SUPPLY AND FUEL RETURN OPENINGS (1" NPT MINIMUM EACH)
- *NORMAL (PRIMARY) TANK VENT OPENING ON PRIMARY TANK (2" NPT MINIMUM)
- *EMERGENCY PRESSURE RELIEF (SECONDARY) VENT OPENING SIZED PER NFPA 30
- OPENING FOR LOW LEVEL AND HIGH LEVEL FUEL ALARM SWITCHES (2"NPT MINIMUM)
- MECHANICAL FUEL GAUGE OPENING (1.5" NPT MINIMUM)
- STICK PORT OPENING (1.5" NPT MINIMUM)
- TANK FILL BUNG (2" NPT MINIMUM)

SECONDARY TANK SHALL HAVE THE FOLLOWING:

- MONITORING PORT ON INTERSTICE OF SECONDARY TANK (2" NPT MINIMUM)
- *EMERGENCY PRESSURE RELIEF (SECONDARY) VENT OPENING SIZED PER NFPA 30

* PRIMARY AND EMERGENCY SECONDARY TANK VENTS SHALL BE EXTENDED OUTSIDE OF THE GENERATOR ENCLOSURE AND TERMINATE AT A MINIMUM HEIGHT OF (12) FEET ABOVE GRADE

FILL ASSEMBLY:

- TANK FILL CONNECTION SHALL BE A CAM LOCK STYLE TIGHT FILL WITH AN OVERFILL PREVENTION VALVE (CLAY & BAILEY MINO #1228 OR APPROVED ALTERNATE) SET TO STOP FLOW OF FUEL WHEN THE TANK REACHES 95% OF TANK CAPACITY. THE FILL SHALL ALSO INCLUDE A SPILL CONTAINMENT BUCKET (EBW MODEL # 706-420-01) AND SHALL BE LOCATED SUCH THAT THE DELIVERY OPERATOR HAS DIRECT ACCESS TO THE TANK GAUGE

TANK GAUGING:

- A MECHANICAL DIRECT READING TYPE OF FUEL LEVEL GAUGE INDICATOR SHALL BE PROVIDED IN ADDITION TO ANY ELECTRONIC MONITORING SYSTEM. THE FUEL LEVEL INDICATOR SHALL BE A ROCHESTER GAUGES SERIES 6500 SENIOR GAUGE OR APPROVED ALTERNATE AND SHALL BE MOUNTED SO THAT THE DELIVERY OPERATOR HAS DIRECT ACCESS TO IT

LEAK AND OVERFILL ALARMS:

- A LIQUID SENSOR SHALL BE MOUNTED INSIDE THE SECONDARY TANK AND WIRED TO THE GENERATOR CONTROL PANEL. SENSOR SHALL BE INCON TSP-ULS OR APPROVED ALTERNATE
- A REMOTE OVERFILL BATTERY OPERATED ALARM HORN (MORRISON BROTHERS 918TCP OR APPROVED ALTERNATE) SHALL BE PROVIDED AND ALARM WHEN TANK REACHES 90% CAPACITY AND SHALL BE MOUNTED SO THAT THE DELIVERY OPERATOR HAS DIRECT ACCESS TO IT

SIGNAGE:

- TANK SHALL BE LABELED WITH FUEL TYPE AND CAPACITY. LABEL SHALL BE 2" WHITE LETTERS ON BLACK BACKGROUND AND ATTACHED TO THE TANK WITH ADHESIVE

ACCESSORIES:

- EMERGENCY VENT SHALL BE OPW 202 OR EQUAL SIZED BY TANK MANUFACTURER PER NFPA 30
- DIELECTRIC COUPLINGS AND/OR FLANGED KITS SHALL BE PROVIDED AT ALL COPPER TO STEEL CONNECTIONS AND AS REQUIRED TO ISOLATE THE PIPING FROM THE TANK.

2 E6.1 DETAIL - GENERATOR CONCRETE PAD - SIDE VIEW
NO SCALE

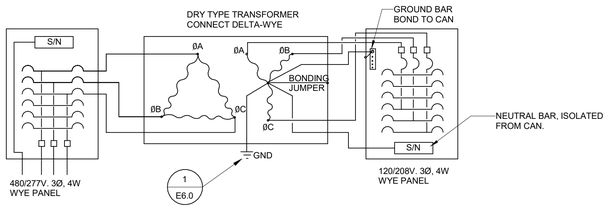

4 E6.1 DETAIL - DRY TYPE TRANSFORMER CONNECTION
NO SCALE

FOR 120/208V PANELS:

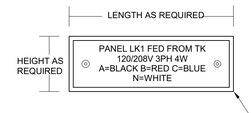

NOTE: DESIGNATIONS ARE FOR REFERENCE ONLY. LABELING SHALL BE OF EQUIPMENT BEING SERVED.

FOR 277/480V PANELS:

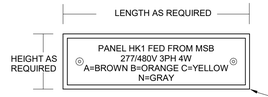

FOR TRANSFORMERS:

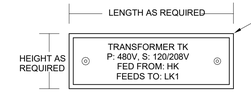

FOR DISCONNECTS:

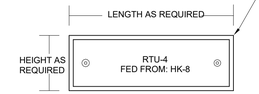

POWER LABEL SHALL BE: BLACK PHENOLIC PLATE WITH ENGRAVED WHITE LETTERING, POP RIVETED TO EQUIPMENT

3 E6.1 IDENTIFICATION TAG DETAIL
NO SCALE

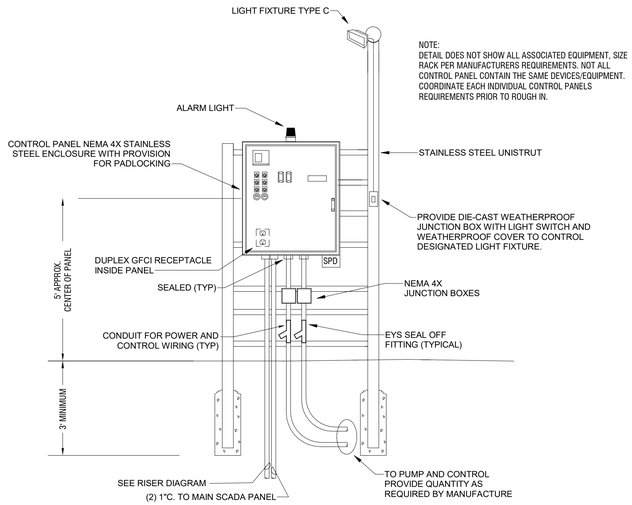

5 E6.1 DETAIL - TYPICAL CONTROL PANEL RACK DETAIL
NO SCALE

EDC
ELECTRICAL DESIGN CONSULTANTS
ELECTRICAL ENGINEERS
AUGUSTA OFFICE - PROJECT #: 25173
edc1973.com

ESG ENGINEERING
6400 Peake Rd
Macon, GA 31210
Ph: (478) 474-4995
Fax: (478) 474-5045

GROUNDWATER WELLS #4 & #5

FOR THE
CITY OF FLOWERY BRANCH

REVISIONS

NO.	DESCRIPTION	DATE
3	REV 3	12-10-25

PERMIT SET

GEORGIA REGISTERED NO. 038816 PROFESSIONAL ENGINEER BRYAN W. NEWLAND

DRAWN BY: CT
CHECKED BY: BN
DATE: OCT 2025
SCALE: AS SHOWN

CONTENT:
ELECTRICAL DETAILS

SHEET NO:
E6.1

PLUMBING SPECIFICATIONS

Provide all plumbing items indicated on the drawings, described herein or otherwise required for a complete and proper installation, including:
A. Plumbing fixtures, fittings and equipment.
B. Hot and cold water systems.
C. Drain waste and vent piping systems.
D. Indirect waste piping, including all valves, traps, piping and accessories for all equipment. Size per equipment requirements.

Comply with all applicable codes, standards and ordinances, including requirements of the Georgia State Minimum Standard Plumbing Code (2018 International Plumbing Code with all Georgia State Amendments), Georgia State Minimum Standard Gas Code (2018 International Gas Code with all Georgia State Amendments), Georgia State Minimum Standard Energy Code (2015 International Energy Conservation Code with all Georgia State supplements and Amendments), and the DOJ 2010 ADA Standards for Accessible Design with Georgia Amendments of Rule 120-3-20.

The contractor should not attempt to precisely scale dimensions from these drawings to obtain construction dimensions and clearance. The contractor shall verify all actual dimensions and clearances. Although these plans are diagrammatic in nature, they shall be followed as closely as site conditions, new construction, and work by other trades shall permit. Deviations from these drawings, which are required to conform to the available space or to actual building construction, shall be made at no additional cost to the owner.

The submission of a bid or proposal will be construed as evidence that the contractor has familiarized himself with the plans and building site. Claims made subsequent to the proposal for materials and/or labor due to difficulties encountered will not be recognized unless these difficulties could not have been foreseen, even though proper examination had been made.

Fabrication or ordering of any material or equipment prior to verification of site conditions shall be done at the contractor's risk.

All equipment and material shall be new and of first quality. Equipment and material shall be the same or equal to the basis of design listed on these drawings.

Coordinate with all trades and verify all equipment rough-in items and locations with the equipment supplier or contractor. All re-work and corrections required due to lack of coordination shall be the contractor's responsibility, and done at no cost to the owner.

Submit shop drawings and material data submittals to the engineer for approval before installation. No substitutions shall be allowed without prior approval by the engineer. Product data for piping, insulation, valves, specialties and all fixtures and equipment scheduled and specified here. For each submittal for review, allow 15 days excluding delivery time to and from the Contractor.

All equipment and flue materials shall be U.L. listed.

Installation shall comply with manufacturer requirements including all clearances recommended for proper operation of service. All serviceable parts shall be readily accessible.

Sanitary drain, roof drainage and vent piping shall be ASTM D2665 schedule 40 PVC with PVC Socket Fittings (ASTM D 2665, made to ASTM D 3311, drain, waste, and vent patterns and to fit Schedule 40 pipe). Slope pipe sizes 6" and under at 1/8 inch per foot continuously toward public sewer. Slope pipe sizes 8" and larger at 1/16 inch per foot continuously toward public sewer. All aboveground piping shall be adequately supported. Install underground, PVC plastic drainage piping according to ASTM D2321. Install aboveground PVC piping according to ASTM D 2665. Cellular Core PVC (Foam Core PVC) not acceptable. Provide PVC IPEX type 1 expansion joints on alternating floors on horizontal sewer, storm, and vent risers over 30 feet tall.

Insulate aboveground floor drains, traps, and sanitary drain piping within 10 feet of drain receiving condensate and equipment drain water below 60° with 1" thick type i performed glass-fiber pipe insulation, 1-1/2" cellular glass, or 1" flexible elestomeric.

All above ground domestic water distribution piping shall be ASTM D 2846, SDR11, schedule 40 CPVC with socket fittings. All piping shall be adequately supported. Disinfect all domestic water piping after installation. All underground domestic water distribution piping 1" and smaller shall be ASTM D 876 & ASTM F 877 PEX with no fittings underground. All underground domestic water distribution piping 1-1/4" and larger shall be ASTM D 1785 schedule 40 PVC with ASTM D 2466 PVC socket fittings. Wrap piping larger than 2" in return air plenums with fire barrier plenum rated wrap.

Chemical waste piping shall be Charlotte pipe Chemdrain CPVC chemical waste schedule 40 drainage dipe and fittings.

DOMESTIC WATER PIPING CLEANING

A. Clean and disinfect potable domestic water piping as follows:
   1. Purge new piping and parts of existing piping that have been altered, extended, or repaired before using.
   2. Use purging and disinfecting procedures prescribed by authorities having jurisdiction; if methods are not prescribed, use procedures described in either AWWA C651 or AWWA C652 or follow procedures described below:
      a. Flush piping system with clean, potable water until dirty water does not appear at outlets.
      b. Fill and isolate system according to either of the following:
         1) Fill system or part thereof with water/chlorine solution with at least 50 ppm (50 mg/L) of chlorine. Isolate with valves and allow to stand for 24 hours.
         2) Fill system or part thereof with water/chlorine solution with at least 200 ppm (200 mg/L) of chlorine. Isolate and allow to stand for three hours.
      c. Flush system with clean, potable water until no chlorine is in water coming from system after the standing time.
      d. Repeat procedures if biological examination shows contamination.
      e. Submit water samples in sterile bottles to authorities having jurisdiction.
B. Prepare and submit reports of purging and disinfecting activities. Include copies of water-sample approvals from authorities having jurisdiction.
C. Clean interior of domestic water piping system. Remove dirt and debris as work progresses.

Domestic water piping shall be insulated with Owens Corning type ASJ/SSL-II heavy density fiber glass with all service jacket. Insulation shall have a flame spread rating not to exceed 25 and a smoke density not to exceed 50 when tested in accordance with U.B.C. standard 42-1. Provide mastic on all joints and exposed ends of insulation. Insulate domestic Cold water piping in unconditioned spaces such as exterior corridors, attic, basements, etc with 1/2" thick insulation for piping 1-1/4" & smaller and 1" thick insulation for piping 1-1/2" & larger. Insulate all domestic Hot water supply and return piping with 1" thick insulation for piping 1-1/4" & smaller and 1-1/2" thick insulation for piping 1-1/2" & larger.

HW & CW Valves: Use pipe size valves, as shown below:
A. Ball: Spears CPVC True Union.
B. Check: Spears CPVC True Union.

Lavatory/ Sink supply fittings: NSF Standard: Comply with NSF/ANSI 61 Annex G, "Drinking Water System Components – Health Effects," for supply-fitting materials that will be in contact with potable water. Standard: ASME A112.18.1/CSA B125.1. Supply Stops: Chrome-plated-brass, one-quarter-turn, ball-type valve with inlet connection matching supply piping. Wheel handle operation. Risers: Chrome-plated, soft-copper flexible tube for exposed applications and ASME A112.18.6, braided- or corrugated-stainless-steel, flexible hose for conceal behind cabinet applications.

Provide ADA Supply and Drain Protective Shielding Guards on ADA fixtures that piping is exposed. Supply and Drain Protective Shielding Guards shall comply with ICC A117.1 and Americans with Disabilities Act (ADA) requirements. Manufactured plastic wraps shall cover hot and cold water supplies, trap, and drain piping.

All pipe hangers, clamps and channels shall be adequately sized to carry pipe loads and prevent sagging.

All other materials not specifically described but required for a complete and proper installation of work of this section, shall be new, first quality of their respective kinds, and as selected by the contractor subject to acceptance by the engineer.

Lay out the plumbing system in careful coordination with the drawings, determining proper elevations for all components of the system and using only the minimum number of bends to produce a satisfactorily functioning system. Follow the general layout shown on the drawings in all cases except where other work may interfere. Unless shown otherwise, lay out all pipes to fall within partition, wall floor, or roof cavities, and to not require furring other than as shown on the drawings.

Do not cut into or reduce the size of any load-carrying member without the prior approval of the architect. Install all pipes to clear all beams and obstructions.

Extend all plumbing vents above roof to parapet height.

Permanently close and make weatherproof any openings or penetrations of the building envelope made for plumbing systems. All wall and floor penetrations shall be sleeved. All exterior wall or foundation wall penetrations shall use a mechanical seal.

Coordinate all roof penetrations with architectural plans and building and roofing trades.

Provide shut-off balls valves and unions at all water connections to equipment and appliances.

Isolate all dissimilar metals with "EPCO" dielectric unions, except for brass or bronze valves with steel pipe.

Protect the potable water supply against backflow and siphonage from equipment, fixtures, etc., using approved backflow and anti-siphon devices.

Thoroughly clean all piping and equipment. Removing all dirt, rust, oil, and plaster.

Test Sanitary and storm drainage piping by plugging all openings and filling with water to a height equal to a 10 foot head. Allow to stand one hour or longer as required. Repair leaking joints and then re-test.

No work shall be covered until it has been inspected and accepted by the local authority.

Domestic water piping tests: Fill domestic water piping. Check components to determine that they are not air bound and that piping is full of water. Test for leaks and defects in new piping and parts of existing piping that have been altered, extended, or repaired. Leave new, altered, extended, or replaced domestic water piping uncovered and unconcealed until it has been tested and approved. Expose work that was covered or concealed before it was tested. Cap and subject piping to static water pressure of 50 psig (345 kPa) above operating pressure, without exceeding pressure rating of piping system materials. Isolate test source and allow it to stand for four hours. Leaks and loss in test pressure constitute defects that must be repaired. Repair leaks and defects with new materials, and retest piping or portion thereof until satisfactory results are obtained.

The entire system shall be warranted for a period of one (1) year beginning with Owner's acceptance of the work. All labor and materials necessary to repair or replace the system, or portions thereof, during that time shall be warranted for a period of one (1) year from the repair or replacement.

Install piping in concealed locations, unless otherwise indicated and except in equipment rooms, and service areas. Install piping indicated to be exposed and piping in equipment rooms and service areas at right angles or parallel to building walls. Diagonal runs are prohibited unless specifically indicated otherwise. Install piping above accessible ceilings to allow sufficient space for ceiling panel removal. Install piping to permit valve servicing. Install piping at indicated slopes. Install piping free of sags and bends. Install fittings for changes in direction and branch connections. Install piping to allow application of insulation. Select system components with pressure rating equal to or greater than system operating pressure. Install escutcheons for penetrations of walls, ceilings, and floors. Verify final equipment locations for roughing-in.

Confirm that millwork is constructed with adequate provision for the installation of counter top lavatories and sinks.

Seal fixtures to wall and floor surfaces with sealant, color to match fixture.

All vents thru roof (VTR) shall be offset a minimum of 10'-0" from all outside air intakes.

Provide Plastic Pipe Markers on all aboveground plumbing piping that Comply with ASME A13.1. Minimum information indicating flow direction arrow and identification of fluid being conveyed. Install labeling on pipe at intervals of not more than 20 feet and at least once in each room.

Provide a complete through penetration fire stopping assembly for fire resistance rated wall assemblies. The through penetration assembly must be listed by an approved third-party test agency (UL), and include the entire listed assembly with all notations. Refer to architectural drawings for fire wall locations.

Approved manufactures: (Items submitted shall be approved by architect and engineer. Architect and engineer reserve the right to reject any item substituted for basis of design item for any reason.)

Supplies & Traps: Engineered Brass CO., Mcguire, Charlotte Pipe, Brasscraft, IPS, Watts, Zurn
Floor Drains & Cleanouts: Zurn, Jay R Smith, Proset, Watts, Mifab, Wade, Josam, Sioux Chief, Oatey
Tankless Electric Water Heaters: A.O. Smith, Rheem, EEmax, Chronomite
Wall Hydrants/ Hose Bibbs: MIFAB, Jay R. Smith, Wade, Watts, Woodford, Zurn
CPVC Valves: American, NIBCO, Spears
Mop Sinks: Stern Williams, Acorn, Fiat
Wash Fountains: Acorn, Willoughby, Bradley
Eyewash: Stingray, Guardian, Acorn, Bradley, Haws, Speakman

FIXTURE AND EQUIPMENT SCHEDULE

#	FIXTURE TYPE	WASTE		WATER SUPPLY		WATER FIX. CONN.		MODEL NUMBER
		BELOW FLOOR	FIXTURE CONN.	COLD	HOT	COLD	HOT	
ESS	COMBINATION DRENCH SHOWER AND EYE/FACE WASH				1-1/4"		1-1/4"	ULINE H-10735
NFWH	BACKFLOW PROTECTED AUTOMATIC DRAINING FREEZELESS HOSE BIBB			3/4"		3/4"		PRIER C-634
RPZ	REDUCED PRESSURE ZONE ASSEMBLIES			SEE DWGS.		SEE DWGS.		WATTS LF009.
FD	FLOOR DRAIN WITH WATERLESS TRAP PRIMER	SEE DWGS	SEE DWGS					ZURN Z730
GCO	GRADE CLEANOUT	SEE DWGS	SEE DWGS					WATTS CO-200-RX-4-60.
MOP	MOLDED HIGH-DENSITY COMPOSITE BASIN							PFMB2424

CONTRACTOR SHALL COORDINATE WITH CIVIL SHEET C9.2 & C9.1 AND ARCHITECT BEFORE ORDERING FIXTURES

WATER HEATER SCHEDULE

MARK	MANUFACTURER	MODEL NUMBER	TYPE	TURN ON (GPM)	KW	PHASE	VOLTAGE
WH	EEMAX	PRO SERIES XTP054480	TANKLESS ELECTRIC	0.5	54.0	3	480

NOTE: PROVIDE CORROSION RESISTANCE N4X6 CABINET

LEGEND

	BALL VALVE		COLD WATER
	CHECK VALVE		HOT WATER
	PIPE UP		SEWER
	PIPE DOWN	CW	COLD WATER
F.F.E.	FINISHED FLOOR ELEVATION	HW	HOT WATER
(TYP)	TYPICAL		STRAINER
N.T.S.	NOT TO SCALE	PDI-B (H)	PDI UNIT WATER HAMMER ARRESTOR

TOTAL ENGINEERS
169 New Street, Macon, GA 31201
(478)741-4632 - T.E. project # 25-101
www.totalengineers.com
GA COA NO # PEF009195 EXP: 06/30/2026

ESG ENGINEERING

GROUNDWATER WELLS #4 & #5
FOR THE
CITY OF FLOWERY BRANCH

REVISIONS

NO.	DESCRIPTION	DATE
2	ADDENDUM 2	

GEORGIA REGISTERED PROFESSIONAL ENGINEER KRUNAL M PATEL

DRAWN BY: KMP
CHECKED BY: KMP
DATE:
SCALE:

CONTENT:

PLUMBING SCHEDULES & SPECIFICATIONS

SHEET NO:

P0.1

Last Saved By: Owner
Plotted: 12/11/2025 10:53 AM
Drawing Path: Z:\2025\25101 Well Project Chem Feed Building Flowery Branch, GA\DRAWINGS\TE\25-101 PLUMBING.dwg

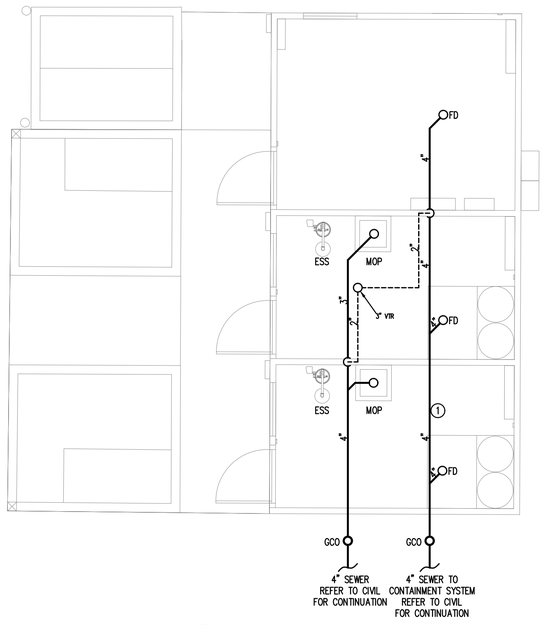

1 PLUMBING PLAN - SEWER
SCALE: 1/4"=1'-0"

KEY NOTES(THIS SHEET ONLY):

1. CONTRACTOR SHALL AVOID ALL HELICAL PILES AND FOOTERS FOR UNDERGROUND PLUMBING. TYPICAL FOR ALL UNDERGROUND PLUMBING.
2. DOMESTIC WATER LINES SHALL BE AFFIXED TO WALL OR HUNG FROM CEILING. TYPICAL FOR ALL PLUMBING PIPES.

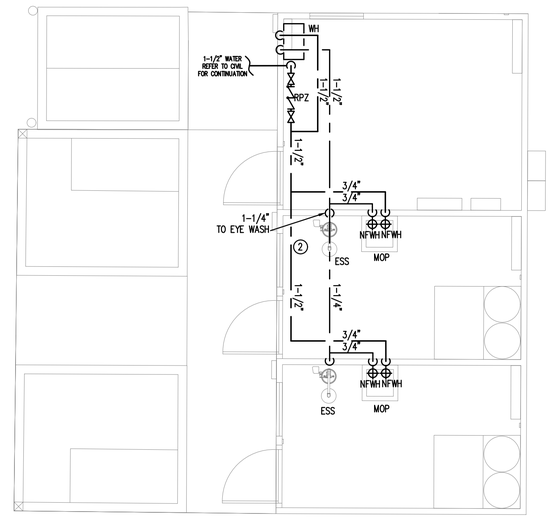

2 PLUMBING PLAN - WATER
SCALE: 1/4"=1'-0"

Last Saved By: Owner
Plotted: 12/11/2025 10:53 AM
Drawing Path: Z:\2025\101 Well Project Chem Feed Building Flowery Branch, GA\DRAWINGS\TE\25-101 PLUMBING.dwg

ESG ENGINEERING

GROUNDWATER WELLS #4 & #5
FOR THE
CITY OF FLOWERY BRANCH

REVISIONS

NO.	DESCRIPTION	DATE
2	ADDENDUM 2	

GEORGIA REGISTERED PROFESSIONAL ENGINEER KRUNAL M PATEL

DRAWN BY: KMP
CHECKED BY: KMP
DATE:
SCALE:

CONTENT:

PLUMBING PLANS

SHEET NO:

P1.0

TOTAL ENGINEERS
169 New Street, Macon, GA 31201
(478)741-4632 - T.E. project # 25-101
www.totalengineers.com
GA COA NO # PEF009195 EXP: 06/30/2026

ADDENDUM #3
December 15, 2025

PROJECT: ***Groundwater Wells #4 & #5***

OWNER: City of Flowery Branch

BID DATE: Original Bid Date – Thursday, December 18, 2025 at 2:00 P.M.
Revised Bid Date (Per Addendum #3) – Thursday, January 15, 2026 at 2:00 PM ET

The Bidder is hereby provided the following information:

1. **MISCELLANOUS INFORMATION**

   a. The Bid date has been moved to Thursday, January 15, 2026 at 2:00 PM ET.

   b. Contractor shall include in their Bid the cost to engage the services of a controls system integrator to complete the work as shown and described below:

      i. Contractor shall employ the services of an experienced control systems integrator (CSI) to provide SCADA improvements at the new well site PLC and within the existing City Telemetry SCADA system (at the wastewater treatment plant) and in the existing RTU/panel at the existing/offsite booster station.

      ii. The City's current booster pumps run off a SCADA-read, pressure gauge signal transmitted via radio that is correlated to elevated tank level (booster pumps turn on when tank level = 7' below full and turn off when tank level = 1' below full).

      iii. At the new well site the Contractor shall utilize Southern Flow Inc. from Alpharetta, GA to provide a new Remote Telemetry Unit with a Programmable Logic Controller (PLC) capable of receiving I/O's and relays from the new submersible well pumps, new flow meters, and from the offsite pressure gauge signal (radio). The new system shall be capable of starting the new well pumps at an operator-specified tank level (such as 6' below full), and the pumps shall run for either a set duration, time of day, or until a totalized flow has been accumulated (such as 50,000 gpd, per the proposed flow meters). The new well pumps shall alternate operations such that both the Waterstone and Henderson pumps do not run concurrently, and the new well pumps shall not run while the existing offsite booster pumps are running. Contractor/CSI shall incorporate new

relays from the new well pumps, new flow meters, and new relays from the existing booster station into the City's existing SCADA system.

iv. The new RTU shall be based on Modicon M340 and communicate via cellular to the Wastewater Treatment Plant. The RTU shall be comprised of the following:

Remote Telemetry Unit (RTU)
Enclosure:
Nema 12 Painted Carbon Steel Enclosure
Enclosure Subpanel
Custom Shelf for Cellular Modem
PLC:
Modicon M340 CPU 24 VDC supply Ethernet port
24 VDC Power Supply
6-slot rack (recommended for expansion)
8-channel Analog Input
4-channel Analog Output
16-Channel Discrete Input
16-Channel Discrete Output
Power Supply and UPS:
24VDC Panel Power Supply and UPS shall be provided.
Communication Equipment:
Sierra Wireless Cellular Modem XR60 Modem Provisioning including Modem Setup with Carrier Activation, Testing and Labeling
Misc:
Isolation Relays & Sockets (on all Discrete Inputs and on 6 Discrete Outputs)
Surge Board Arrestors for all Analog Signals
Fuse Blocks with Indicators
Circuit Breakers
Wire Terminals
Wire Duct
Intrusion Switch

v. **Existing Booster Pump Station Modifications:**

At the existing Booster Pump Station (Roberts Dr ground storage tank site), the System Integrator shall modify the Programming and physical I/O if necessary to incorporate the required interlocks described above to prevent the different well sites from operating at the same time as described above.

vi. **Existing SCADA System Modifications at the Wastewater Treatment Plant**

The System Integrator shall provide and install a Sierra Wireless Cellular Modem at the Wastewater Treatment Plant, as well as any other antennas and accessories necessary to communicate to the new Well site RTU. The existing Wonderware HMI shall be modified to include the well site and the functionality above including the interlocks and the pressure transmitter at the existing BPS.

vii. **Compatibility**

The System Integrator shall ensure the new cellular based RTU is compatible with the existing radio based telemetry system and existing SCADA HMI to provide reliable control and operator interface for the City of Flowery Branch.

Contractor shall include all associated costs for the above-described work, including labor, materials, tools, testing, equipment, hauling/freight, transportation, coordination, overhead/profit, etc. under the line item in the Bid Form for SCADA & Controls Integration Work Complete. SCADA system integrator contact information: Jim Bercik (Southern Flow Inc.), 470-443-9660, (jbercik@southernflowinc.com).

c. Both the Henderson & Waterstone submersible well pumps will be controlled via soft starters, **not** variable frequency drives (VFD). See electrical plan sheets for detailed layout of conduit/wiring, equipment, and control panels.

d. Chemical feed building Finished Floor Elevation (FFE) is to be 1122.20.

e. Concrete support pads for HVAC equipment shall be constructed per the detail on Sheet C9.4 and be sized and placed according to the mechanical & electrical plans. Approximate dimensions for each of the three (3) pads: 3’x2’x6”.

2. CONTRACT DOCUMENTS, SECTION 00410 – BID FORM

a. A new Section 00410 – Bid Form has been issued – see attached.

3. TECHNICAL SPECIFICATIONS, SECTION 01025 – MEASUREMENT & PAYMENT

a. A new Section 01025 – Measurement & Payment has been issued – see attached.

4. CONSTRUCTION PLANS

a. See attached revised Construction Plan sheets:

- Construction detail sheet C9.3
- Plumbing plan sheet P0.1 & P1.0

All bidders shall acknowledge receipt of all addenda issued where indicated on the bid sheets. (Section 00410 – Bid Form, Page 2)

ATTENTION

ALL BIDDERS SHALL ACKNOWLEDGE RECEIPT OF ALL ADDENDA ISSUED WHERE INDICATED ON THE BID SHEETS. (SECTION 00410 – BID FORM, PAGE 2)

BIDDERS ARE MADE AWARE THAT IT IS THEIR RESPONSIBILITY TO VERIFY THAT ANY AND ALL ADDENDA HAVE BEEN RECEIVED PRIOR TO THE SUBMISSION OF THEIR BID. IN THE EVENT ANY BIDDER FAILS TO ACKNOWLEDGE RECEIPT OF ANY SUCH ADDENDA IN THE SPACE PROVIDED ON THE BID FORM, THEIR BID WILL BE CONSIDERED NONRESPONSIVE.

END ADDENDUM

SECTION 00410
BID FORM

PROJECT IDENTIFICATION:

Groundwater Wells #4 & #5

CONTRACT IDENTIFICATION AND NUMBER:

F0002.018

THIS BID IS SUBMITTED TO:

City of Flowery Branch
5410 Pine Street
Flowery Branch, GA 30542

THIS BID IS SUBMITTED FROM:

Bidder: _____

Address: _____

_____

Phone: _____

State of Georgia Business License No.: _____

1. The undersigned Bidder proposes and agrees, if this Bid is accepted, to enter into an agreement with Owner in the form included in the Contract Documents to perform and furnish all Work as specified or indicated in the Contract Documents for the Contract Price and within the Contract Time indicated in this Bid and in accordance with the other terms and conditions of the Contract Documents.

2. Bidder accepts all of the terms and conditions of the Advertisement or Invitation to Bid and Instructions to Bidders, including without limitation those dealing with the disposition of Bid security. This Bid will remain subject to acceptance for 60 days after the day of Bid opening. Bidder will sign and submit the Agreement with the Bonds and other documents required by the Bidding Requirements within fifteen days after the date of Owner's Notice of Award.

3. In submitting this Bid, Bidder represents, as more fully set forth in the Agreement, that:

(a) Bidder has examined copies of all the Bidding Documents and of the following Addenda (receipt of all which is hereby acknowledged):

Date	Addendum Number

(b) Bidder has familiarized itself with the nature and extent of the Contract Documents, Work, site, locality, and all local conditions and Laws and Regulations that in any manner may affect cost, progress, performance or furnishing of the Work.

(c) Bidder has studied carefully all reports and drawings of subsurface conditions and drawings of physical conditions which are identified in the Supplementary Conditions as provided in Paragraph 4.2 of the General Conditions, and accepts the determination set forth in Paragraph 4.2.1 of the Supplementary Conditions of the extent of the technical data contained in such reports and drawings upon which Bidder is entitled to rely.

(d) Bidder has obtained and carefully studied (or assumes responsibility for obtaining and carefully studying) all such examinations, investigations, explorations, tests and studies (in addition to or to supplement those referred to in (c) above) which pertain to the subsurface or physical conditions at the site or otherwise may affect the cost, progress, performance or furnishing of the Work as Bidder considers necessary for the performance or furnishing of the Work at the Contract Price, within the Contract Time and in accordance with the other terms and conditions of the Contract Documents, including specifically the provisions of Paragraph 4.2 of the General Conditions; and no additional examinations, investigations, explorations, tests, reports or similar information or data are or will be required by Bidder for such purposes.

(e) Bidder has reviewed and checked all information and data shown or indicated on the Contract Documents with respect to existing Underground Facilities at or contiguous to the site and assumes responsibility for the accurate location of

said Underground Facilities. No additional examinations, investigations, explorations, tests, reports or similar information or data in respect of said Underground Facilities are or will be required by Bidder in order to perform and furnish the Work at the Contract Price, within the Contract Time and in accordance with the other terms and conditions of the Contract Documents, including specifically the provisions of Paragraph 4.3 of the General Conditions.

(f) Bidder has correlated the results of all such observations, examinations, investigations, explorations, tests, reports and studies with the terms and conditions of the Contract Documents.

Bidder has given Engineer written notice of all conflicts, errors or discrepancies that it has discovered in the Contract Documents and the written resolution thereof by Engineer is acceptable to Bidder.

(g) This Bid is genuine and not made in the interest of or on behalf of any undisclosed person, firm or corporation and is not submitted in conformity with an agreement or rules of any group, association, organization or corporation; Bidder has not directly or indirectly induced or solicited any other corporation to refrain from bidding; and Bidder has not sought by collusion to obtain for itself any advantage over any other Bidder or over Owner.

(h) Bidder agrees to commence work under this Agreement on or before a date to be specified in a written "Notice to Proceed" of the Owner.

(i) Bidder accepts the provisions of the Agreement as to liquidated damages in the event of failure to complete the Work on time.

4. Bidder will complete the Work in accordance with the Contract Documents for the following price(s):

The Contractor is directed to Section 01025 “Measurement and Payment” for the methods and limits for payment to the Contractor for the pay items listed below:

(A) BASE BID: Groundwater Wells #4 & #5

BID FORM BEGINS ON PAGE 4

BID FORM					
ITEM NO	**QTY**	**UNIT**	**DESCRIPTION**	**UNIT PRICE**	**TOTAL PRICE**
1	80	CY	Rock Removal - Base	$ 75.00	$ 6,000.00
2	80	CY	Rock Removal - Premium		
3	1	LS	Clearing & Grubbing		
4	1	LS	Demolition		
5	1	LS	Groundwater Wells #4 & #5 Improvements Complete (see Section 01025 for limits and extents of payment under this line item)		
6	1	LS	SCADA & Controls Integration Work Complete		
7	1	LS	Diesel Generator Installation		
8	1	EA	3-Way Fire Hydrant Assembly		
9	1	EA	4” Gate Valve w/ Box & Cover		
10	1	EA	8” Gate Valve w/ Box & Cover		
11	50	LF	4" RJ DIP Water Main - Open Cut		
12	70	LF	4" RJ DIP Water Main - Horizontal Directional Drill		
13	1,580	LF	8" RJ DIP Water Main - Open Cut Cross-Country		
14	45	LF	8" RJ DIP Water Main - Open Cut Roads		
15	145	LF	8" DR-11 (DIPS) HDPE Water Main - Horizontal Directional Drill		
16	1	EA	2" Tapping Sleeve & Valve (incl. Valve Box & Cover)		
17	1	EA	6" Tapping Sleeve & Valve (incl. Valve Box & Cover)		
18	1	EA	Cut, Cap, & Abandon Ex. 2" Water Line		
19	5	EA	Longside Water Service Transfer		
20	1	LS	Traffic Control		

21	1	LS	Erosion & Sediment Control Complete		
22	1	LS	Landscaping Complete		
23	1	LS	Groundwater Wells #4 & #5 Rehabilitation Allowance	$ 115,000.00	$ 115,000.00
24	1	LS	Supplemental Work Allowance (SWA)	$ 100,000.00	$ 100,000.00
			TOTAL BASE BID AMOUNT:		

Bidder agrees to furnish all labor, materials, and equipment necessary to construct the **Groundwater Wells #4 & #5** for the City of Flowery Branch for the sum of

_____Dollars

($_____).

6. Bidder agrees that the Work will be substantially complete and ready for final payment in accordance with the completion time/dates provided in the Contract and any Addenda.

7. Bidder accepts the provisions of the Agreement as to liquidated damages in the event of failure to complete the Work within the times specified in the Agreement.

8. The following documents are attached to and made a condition of this Bid:
   a. Required Bid Security in the form of 5% of the Bid Total Price.

9. The undersigned further agrees that in case of failure on his part to execute the said contract and the Bond within fifteen (15) consecutive calendar days after written notice being given of the award of the contract, the check or bid bond accompanying this bid, and the monies payable thereon shall be paid into the funds of the Owner as liquidated damages for such failure, otherwise, the check or bid bond accompanying this proposal shall be returned to the undersigned.

10. Communications concerning this Bid shall be addressed to:
    ESG Engineering, LLC
    6400 Peake Rd
    Macon, GA 31210
    Attn: Rachael Crowell
    rcrowell@esgengineering.com

11. Terms used in this Bid which are defined in the General Conditions or Instructions to Bidders will have the meanings indicated in the General Conditions or Instructions to Bidders.

SUBMITTED on _____, 20____.

BIDDER: _____

BY: _____

TITLE: _____

STATE CONTRACTOR
LICENSE NO. _____

ADDRESS: _____

_____

_____

PHONE: _____

Seal: (if bid by a Corporation)

END OF SECTION

SECTION 01025
MEASUREMENT AND PAYMENT

PART 1 – GENERAL

1.01 SCOPE OF WORK

A. This Section describes the methods by which measurement will be made of the quantities for which payment will be made for the Project.

B. The Bid lists each item of the Project for which payment will be made. No payment will be made for any items other than those listed in the Bid.

C. Required items of work and incidentals necessary for the satisfactory completion of the work which are not specifically listed in the Bid, and which are not specified in this Section to be measured or to be included in one of the items listed in the Bid, shall be considered as incidental to the work and whose cost shall be included in the item of the Bidder's choice. All costs thereof, including Contractor's overhead costs and profit, shall be considered as included in the lump sum or unit prices bid for the various Bid items. The Contractor shall prepare the Bid accordingly.

D. Work includes furnishing all labor, equipment, tools and materials, which are not furnished by the Owner and performing all operations required to complete the work satisfactorily, in place, as specified and as indicated on the Drawings.

1.02 MEASUREMENT OF WORK

A. Measurement methods delineated in the individual specification sections complement the criteria of this section. In the event of conflict, the requirements of the individual specification section govern.

B. Work shall be measured by the Engineer or his representative with assistance from the Contractor prior to preparation of a payment request by the Contractor.

C. Unit quantities that are measured in place shall be measured as they are placed. The Contractor shall give the Engineer a minimum of two days' notice for making all required measurements.

D. Materials that must be measured as delivered shall be measured at the time of delivery by the Engineer or his representative; the Contractor shall provide sufficient advance notice so that such measurements can be made.

E. Work necessary for a complete and operational job, such as relocation of mailboxes

or fences, removal of trees, relocation of utilities, graveling / maintaining driveways and driving lanes, field engineering, clearing and grubbing, traffic control, etc., not specifically identified as a pay item shall be included in the unit price bid of the Bidder's choosing. No additional payments will be made for such activities.

1.03 ESTIMATED QUANTITIES

All estimated quantities for unit price items, stipulated in the BID FORM, or other Contract Documents, are approximate and are to be used as a basis for comparing the bids submitted for the Project. The actual amounts of work done and materials furnished under unit price items may differ from the estimated quantities. The basis of payment for work and materials will be the actual amount of work done and materials furnished. The Contractor agrees to make no claim for damages, anticipated profits or otherwise on account of any difference between the amounts of work actually furnished and the estimated amounts included in the BID FORM. The Contractor will not be paid for any work which exceeds the quantity set forth in the BID FORM without a change order issued before the work is performed unless specifically ordered in writing by the Engineer. The Contractor will provide assistance to the Engineer to check quantities and elevations when so requested.

1.04 MEASUREMENT OF QUANTITIES

A. Measurement by Weight – Concrete reinforcing steel, rolled or formed steel or other metal shapes will be measured by handbook weights. Welded assemblies will be measured by handbook or scale weight.

B. Measurement by Volume – Measured by cubic dimension using mean length, width and height or thickness.

C. Measurement by Area – Measured by square dimension using mean length and width or radius.

D. Linear Measurement – Measured by linear dimension, at the item centerline or mean chord.

E. Stipulated Sum/Price Measurement – Items measured by weight, volume, area, or linear means or combination, as appropriate, as a completed item or unit of the Work.

1.05 PROGRESS PAYMENTS

A. Progress payments shall be based on percentage of work complete for lump sum pay items and units installed for unit price pay items.

B. All items of Work not specifically listed in the Bid Schedule shall be considered incidental to the construction, and the cost of all such work and material shall be

included in the item of the Contractors choice.

C. All items listed for measurement and payment shall include all materials, labor, and equipment necessary to successfully and satisfactorily complete Work specified.

D. Payment – The Contractor will receive payment only for the items listed in the Bid Schedule of his contract, and no separate payments will be made for the work under any section of the Contract Documents except as provided for in the Bid Form. Where measurements are required to be made by the Engineer, for the payment of a pay item, the failure of the Contractor to give the adequate notification or failure of the Contractor to give the engineer assistance for the measurement shall result in the forfeiture of payment for the work or item which was not measured.

PART 2 – PRODUCTS

2.01 STORED MATERIALS

A. Partial payment shall be made for approved materials stored at the project site, provided invoices for said materials are furnished in accordance with payment request submittal and shop drawings for said materials have been approved.

PART 3 – EXECUTION

3.01 CLEARING & GRUBBING

A. Measurement: Measurement for Clearing & Grubbing shall be on a lump sum basis and shall include all clearing & grubbing required for the project site, including the wells site & along the proposed water main alignment.

B. Payment: Payment for Clearing & Grubbing shall be on the basis of the lump sum price provided in the BID FORM and includes clearing and grubbing for all areas shown in the plans where the proposed work conflicts with existing vegetation/trees, and includes all trimming, tree removal, clearing, grubbing, root raking, hauling, disposal, and all labor, materials, tools, and equipment required.

3.02 DEMOLITION

A. Measurement: Measurement for Demolition shall be on a lump sum basis.

B. Payment: Payment for Demolition shall be on the basis of the lump sum price provided in the BID FORM and includes the demolition/removal of all existing site features in conflict with the proposed improvements as shown on the Plans, and includes hauling, disposal, and all labor, materials, tools, and equipment required.

3.03 GROUNDWATER WELLS #4 & #5 IMPROVEMENTS COMPLETE

A. Measurement: Measurement for Groundwater Wells #4 & #5 Improvements

Complete shall be on a lump sum basis.

B. Payment: Payment for Groundwater Wells #4 & #5 Improvements Complete shall be on the basis of the lump sum price provided in the BID FORM. Payment shall include all ancillary labor, materials, tools, testing, hauling/transportation, mobilization, and equipment required for a complete and functional project, including but limited to:

- Site grading, including all import fill material and removal, hauling, and disposal of excess materials
- Landscaping
- Gravel access drive & well site pad (incl. Tensar geogrid & GAB)
- Concrete sidewalk/walking areas and external chemical storage areas
- Protective bollards
- Yard hydrant installation (incl. all valves, fittings, etc.)
- Asphalt parking area (incl. Tensar geogrid & GAB)
- Chain link security fencing & gates
- Two (2) Groundwater Wells construction
    - Grundfos submersible pumps
    - Cables, supports, brackets, centralizers, hardware, etc.
    - Electrical & controls improvements
    - Discharge piping, fittings, transitions/connections, valves, & well casing pipe
    - Pressure gauges
    - Well pump enclosures
    - Support slabs (incl. reinforcement, concrete, Tensar geogrid, & crushed stone)
    - All other ancillary and miscellaneous work required to install the groundwater wells in accordance with the Construction Plans and Spec. Sections 432133 & 02514
- Chemical feed building
    - Building foundation
        - Foundation installation per Structural plan
        - Pile design & stamped drawing per helical pile engineer
        - Helical pile installation
    - Prefabricated concrete structure installed per drawings
    - Interior & exterior wall and floor coating system per construction drawings
    - All Mechanical/HVAC improvements shown on the mechanical plan
    - All Electrical improvements (incl. wiring, conduits, equipment, etc.)
    - All interior/exterior lighting improvements
    - Domestic water service tap w/ meter, backflow preventer, & box

    - All plumbing fixtures/appurtenances/piping/fittings as shown in the plumbing plans
    - Discharge piping pressure gauge
    - Chemical feed system for fluoride & chlorine
        - Eight (8) Grundfos chemical feed pumps per Spec. Section 70001
        - Feed line tubing/piping, valves, fittings, saddle taps, injection quills, hardware, etc. per Section 70001
        - Raceway/chase box installation
    - Building sewer lines, cleanouts, and connection to existing san. sewer main
    - Chemical containment pallets & ramps
    - Ultrasonic flow meters
    - Flanged DI piping, fittings, & valves
    - Pipe supports
    - All pipe/conduit cores/penetrations (incl. coring, link seals, & grouting)
    - Gutters & downspouts
    - All other ancillary and miscellaneous work required to install the chemical feed building in accordance with Spec. Section 02513 & the applicable drawings
- Covered steel structure
    - Stamped engineering design plans and applicable fees
    - Foundation/footers per detail & note on Sheet C9.4
    - Steel structure/shelter installed per detail drawings
    - Gutters & downspouts
    - All other ancillary and miscellaneous work required to install the steel structure in accordance with Section 90001 and the applicable drawings (provided by Renegade)
- Isolated chemical spill containment system (incl. floor drains, piping, fittings, precast structures, and coatings/linings)
- All restrained joint & flanged ductile iron yard piping, fittings, & valves located up to and including the 8”x6” reducer located outside of the backflow vault (see Sheets C4.0 & C4.1)
- Riser blowoff/sampling piping
    - Tapping saddle, spigot, fittings/adaptors, etc.
    - Insulated enclosure
    - Crusher run bedding
- Exterior pipe insulation system
- All pipe coating/lining and painting
- Backflow installation
    - Double Check Detector Assembly (DCDA)
    - Pressure gauge

- Pipe supports & blocking
- Precast concrete vault
- Access hatch
- Ladder
- Stone bedding & Tensar geogrid
- Pipe, fittings, and valves (incl. coring, link seals, & grouting)
- Drainage piping

- All electrical & controls materials, workmanship, equipment, coordination, implementation, testing, and ancillary items not furnished & installed by the utility provider (GA Power)
- All other ancillary and miscellaneous items required to provide a complete and functional project as shown and described in the Construction Plans, Details, and Specifications.

3.04 DIESEL GENERATOR INSTALLATION

A. Measurement: Measurement for Diesel Generator Installation shall be on a lump sum basis.

B. Payment: Payment for Diesel Generator Installation shall be on the basis of the lump sum price provided in the BID FORM and shall include the cost of the generator, concrete support slab, steel reinforcement, Tensar geogrid, crushed stone, grading of local area, all required electrical work/connections, transfer switch integration and all labor, materials, tools, testing, and hauling/freight required for a complete and functional installation.

3.05 SCADA & CONTROLS INTEGRATION WORK COMPLETE

A. Measurement: Measurement for SCADA & Controls Integration Work Complete shall be on a lump sum basis.

B. Payment: Payment for SCADA & Controls Integration Work Complete shall be on the basis of the lump sum price provided in the BID FORM and shall include the cost of all equipment, materials, and work shown and described in the SCADA/CSI Scope of Work, and all required off-site controls work integration/connections to the existing system(s), and all labor, materials, tools, testing, and hauling/freight required for a complete and functional SCADA system installation.

3.06 FIRE HYDRANT ASSEMBLY

A. Measurement: Measurement for Fire Hydrant Assembly shall be based on the number of fire hydrants that are installed.

B. Payment: Payment for Fire Hydrant Assembly shall be on the basis of the unit price

provided in the BID FORM and shall include the cost of excavation, bedding, backfill, restrained hydrant tee, restrained hydrant lead pipe, 3-way fire hydrant, fittings/couplings, restraint/blocking, and all labor, materials, tools, testing, and hauling/freight required for a complete and functional installation.

3.07 GATE VALVE

A. Measurement: Measurement for Gate Valve shall be based on the number of valves that are installed.

B. Payment: Payment for Gate Valve shall be on the basis of the unit price provided in the BID FORM for valves of various sizes and shall include the cost of the gate valve, box, stem, cover, and all labor, materials, tools, testing, freight/hauling, and equipment required to install the gate valves where shown in the plans.

3.08 WATER MAIN – OPEN CUT

A. Measurement: Measurement for Water Main – Open Cut shall be on a per linear foot basis.

B. Payment: Payment for Water Main – Open Cut shall be on the basis of the unit price provided in the BID FORM and shall include the cost of pipe of various materials and sizes, excavation, bedding, & backfill, all adaptors/transitions/couplings, thrust blocking, restrained joint glands/gaskets, fittings (bends, tees, crosses, reducers, etc.), **connecting to existing water lines (where applicable)**, pipe cutting, and all freight/hauling, labor, materials, tools, testing, and equipment required.

3.09 WATER MAIN – HORIZONTAL DIRECTIONAL DRILL

A. Measurement: Measurement for Water Main – Horizontal Directional Drill shall be on a per linear foot basis.

B. Payment: Payment for Water Main – Horizontal Directional Drill shall be on the basis of the unit price provided in the BID FORM and shall include the cost of various sizes and materials of pipe, excavation, bedding, & backfill, pipe cutting, fusing/welding, directional drill operation, drilling fluid, excavation of launching & receiving pits, and all freight/hauling, labor, materials, tools, testing, and equipment required.

3.10 WATER MAIN – OPEN CUT ROADS

A. Measurement: Measurement for Water Main – Open Cut Roads shall be on a per linear foot basis.

B. Payment: Payment for Water Main – Open Cut Roads shall be on the basis of the unit price provided in the BID FORM and shall include the cost of pipe of various

materials and sizes, excavation, bedding, & backfill, Class “A” concrete, asphalt surface course, all adaptors/transitions/couplings, thrust blocking, restrained joint glands/gaskets, fittings (bends, tees, crosses, reducers, etc.), connecting to existing water lines, pipe cutting, and all freight/hauling, labor, materials, tools, testing, and equipment required.

3.11 TAPPING SLEEVE & VALVE INSTALLATION

A. Measurement: Measurement for Tapping Sleeve & Valve Installation shall be based on the number of hot-tap connections made to existing water lines/mains.

B. Payment: Payment for Tapping Sleeve & Valve Installation shall be on the basis of the unit price provided in the BID FORM and shall include the cost of the tapping sleeve & valve assembly of various sizes, tapping/connecting to existing water mains, valve riser & box/cover, and all freight/hauling, labor, materials, tools, testing, and equipment required.

3.12 CUT, CAP, & ABANDON WATER LINES

A. Measurement: Measurement for Cut, Cap, & Abandon Water Lines shall be on a per each basis.

B. Payment: Payment for Cut, Cap, & Abandon Water Lines shall be on the basis of the unit price provided in the BID FORM and shall include the cost of all excavations, isolating lines, pipe cutting, installation of two (2) ductile iron caps, backfill, and all freight/hauling, labor, materials, tools, testing, and equipment required.

3.13 WATER SERVICE TRANSFER

A. Measurement: Measurement for Water Service Transfer shall be on a per each basis.

B. Payment: Payment for Water Service Transfer shall be on the basis of the unit price provided in the BID FORM and shall include the cost of disconnecting the existing pipe, tapping saddle, corporation stop, installing new piping/tubing to match existing size, directional drill operation (if required), couplings/adapters, and all labor, materials, tools, testing, freight/hauling, and equipment required to transfer existing water service lines to the new main.

3.14 TRAFFIC CONTROL

A. Measurement: Measurement for Traffic Control shall be on a lump sum basis for the entire project, including the wells site and along the proposed water main alignment shown in the BID FORM.

B. Payment: Payment for Traffic Control shall be at the lump sum price provided in the BID FORM and shall include all traffic control operations, labor, materials, signage, procedures, devices, and equipment required to adhere to the latest MUTCD, GDOT, and local standards and recommendations throughout construction.

3.15 EROSION CONTROL

A. Measurement: Measurement for Erosion Control shall be on a lump sum basis for the entire project, including at the wells site and along the proposed water main alignment.

B. Payment: Payment for Erosion Control shall be on the basis of the lump sum price provided in the BID FORM and shall include all NPDES permitting, NOI filing, inspection, sampling, record keeping, reporting, ES&PC signage, silt fence, check dams, temporary & permanent grassing, NOT filing, and all labor, materials, tools, testing, freight/hauling, and equipment required.

3.16 LANDSCAPING COMPLETE

A. Measurement: Measurement for Landscaping Complete shall be on a lump sum basis.

B. Payment: Payment for Landscaping Complete shall be on the basis of the lump sum price provided in the BID FORM and shall include the cost of providing and installing landscaping trees/shrubbery in accordance with the landscaping plan, as well as replacing/relocating any disturbed landscaping and landscaping features for the entire project site, including fencing, shrubbery, trees, planter beds, irrigation systems, specific grassing, planter beds, and all labor, materials, tools, testing, freight/hauling, and equipment required.

END OF SECTION

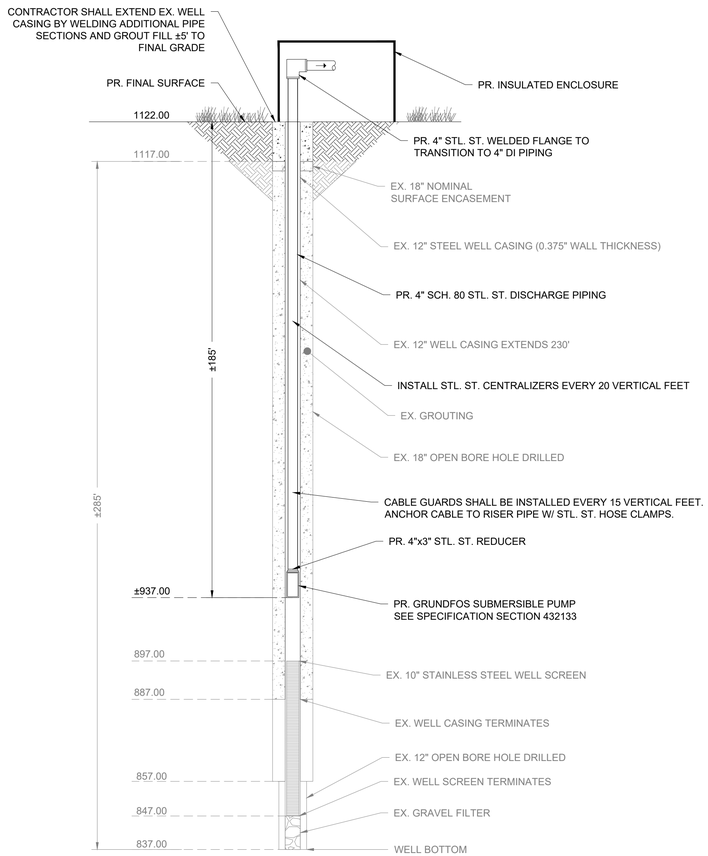

HENDERSON WELL SECTION
NOT TO SCALE

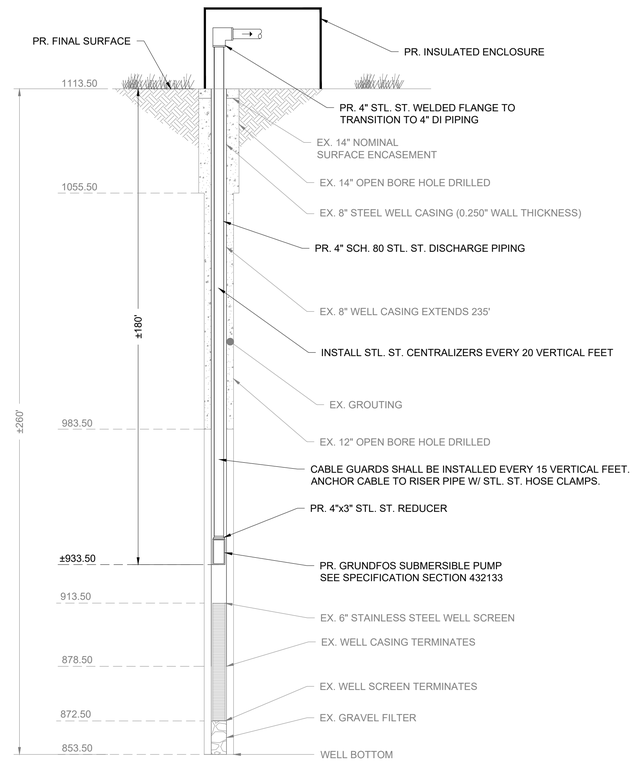

WATERSTONE WELL SECTION
NOT TO SCALE

NOTES:

1. PRECAST CONCRETE VAULT SHALL BE BY TINDALL OR APPROVED EQUIVALENT.
2. VAULT SHALL NOT BE LOCATED IN AREA SUBJECT TO GROUND WATER RUNOFF, STORM DRAIN COLLECTION AND DISCHARGE, OR AREAS PRONE TO CONSTANT WATER INFILTRATION. VAULT SHALL BE ABLE TO DRAIN BY GRAVITY OR BY ALTERNATE MEANS.
3. HATCH DOOR TO BE LOCATED OVER METER ASSEMBLY FOR EASE OF REMOVAL.
4. CONTRACTOR TO SEAL ALL OPENINGS IN VAULT WITH LS-200 LINK SEAL & NON-SHRINK GROUT.
5. FOR FINAL APPROVAL, ASSEMBLY MUST BE SET IN VAULT AS SPECIFIED. UNDER NO CONDITION WILL ANY CONNECTION BE ALLOWED BETWEEN THE SERVICE METER AND BACKFLOW PREVENTER USED FOR SYSTEM CONTAINMENT. BACKFLOW PREVENTER SHALL BE INSTALLED DOWNSTREAM OF ALL METERS.
6. ALL BACKFLOW PREVENTION DEVICES MUST BE SUCCESSFULLY TESTED PRIOR TO FINAL ACCEPTANCE BY THE ENGINEER.

MATERIALS		
ITEM	QTY	DESCRIPTION
1	1	6'x8' PRECAST CONCRETE VAULT
2	1	ALUMINUM HATCH W/ LOCKING HASP
3	1	WALL-MOUNTED STEEL LADDER
4	1	6" 709DCDA DOUBLE CHECK DETECTOR ASSEMBLY
5	1	#57 STONE BEDDING
6	3	STANDON S-89 FLANGED PIPE SUPPORT
7	2	6" FLxRJ DUCTILE IRON PIPE SPOOL PIECE
8	2	6" MECHANICAL JOINT W/ MEGALUG (OR EQUIVALENT)
9	2	LS-200 LINK SEAL
10	1	3" PVC DRAIN PIPING W/ FILTER FABRIC
11	1	1.5" DOMESTIC WATER LINE
12	1	CURB STOP / ISOLATION VALVE
13	1	WATER METER
14	1	BACKFLOW PREVENTER
15	1	METER BOX

BACKFLOW VAULT NOTES
NOT-TO-SCALE

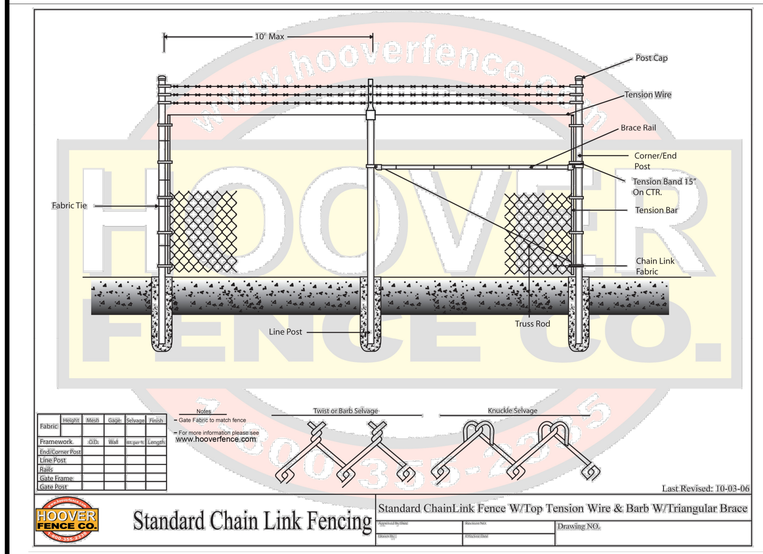

*OTHER EQUAL ALTERNATIVES MAY BE UTILIZED

CHAIN LINK FENCE
NOT TO SCALE

INSULATED FIBERGLASS ENCLOSURE SIZING GRID



MODEL #	OUTSIDE TOP A—B	LOWER COVER C—D	BOTTOM AT UPPER BASE E—F	OUSIDE BASE FLANGE G—H	COVER HEIGHT I	OVERALL HEIGHT J
D-103	20.75 x 6.00	27.25 x 12.25	30.25 x 14.75	33.75 x 18.25	21.5	23.25
D-104	31.75 x 5.75	38.25 x 12.25	41.25 x 15	44.25 x 18	20.75	23.5
D-102	22.25 x 15.75	26.5 x 20	29 x 22.25	33 x 26.25	25.75	28.5
D-102-39	22.25 x 15.75	25.75 x 19.25	31 x 25	34 x 27.75	25.75	39
D-105	41.25 x 17.50	47 x 22.75	49 x 25	53.5 x 29.5	23.5	25.5
D-105-36	41.25 x 17.50	47 x 22.75	52 x 28	55 x 31	23.5	36
D-100	30 x 20.75	41.5 x 32.5	44 x 35	48.5 x 39.75	34.75	37
D-106	39 x 31.25	49 x 40.5	50.75 x 42.5	54.75 x 46.5	40	43.5
D-207	48.75 x 32	55.5 x 37.5	59.5 x 40.5	65 x 46	35.5	37.25
D-207-48	48.75 x 32	55.5 x 37.5	63 x 44	65.5 x 47	35.5	48
D-108	64.5 x 31.5	68.5 x 34.5	70.5 x 36.5	74.5 x 40.5	44.25	46.25
D-301	74.63 x 46.5	82.5 x 54.5	86.5 x 59	90.5 x 63	26.75	33.75
D-303	74.63 x 46.5	82.5 x 54.5	86.5 x 59	90.5 x 63	46	53

GENERAL SPECIFICATIONS

The molded fiberglass enclosure shall be constructed with rigid thixotropic polyester resin and 30% chopped glass in 1-1/2 to 2-inch random patterns of 1/8 to 3/16 inch thick. The exterior finish shall be White isophthalic gel-coating .02 to .04 inches. The inside surface shall be insulated with 2 lb.-density sprayed-on polyurethane foam, producing an R-14 to R-19 composite value. The fiberglass base flange shall be hinged using 3-1/2-inch noncorrosive polycross link hinges or 3 x 4-inch stainless steel. A 30 lb. spring-loaded latch hooks to a 7-inch cast aluminum handle.

WELL HOUSE FIBERGLASS ENCLOSURE DETAIL
NOT-TO-SCALE

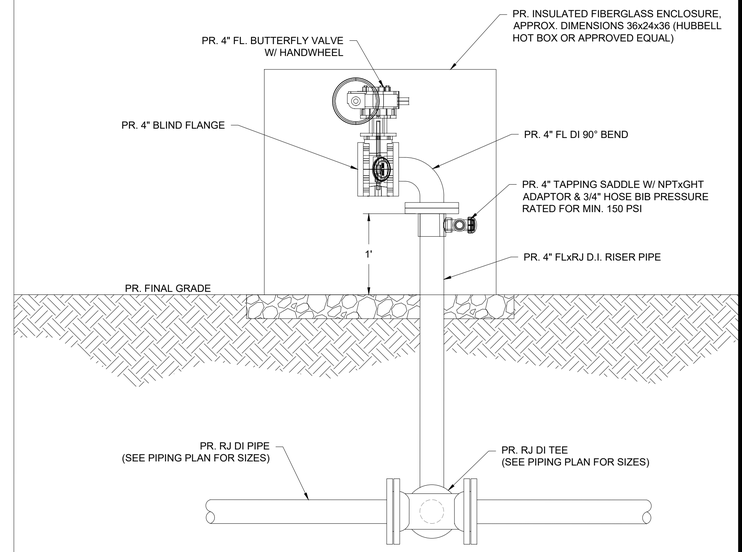

WELL BLOW-OFF VALVE DETAIL
NOT-TO-SCALE

ESG ENGINEERING
6400 Peake Rd
Macon, GA 31210
Ph: (478) 474-4996
Fax: (478) 474-5045

GROUNDWATER WELLS #4 & #5

FOR THE

CITY OF FLOWERY BRANCH

REVISIONS

NO.	DESCRIPTION	DATE
1	ESPC SHEETS	11-7-25
2	BID SET OF PLANS	12-1-25
3	REVISED WITH CITY COMMENTS	12-5-25
4	ADDENDUM #1	12-8-25
5	ADDENDUM #2	12-11-25
6	ADDENDUM #3	12-12-25

BID SET

GEORGIA REGISTERED No. PE046341 PROFESSIONAL ENGINEER ANDREW D SWICEGOOD

DRAWN BY: DSC
CHECKED BY: ADS
DATE: OCT 2025
SCALE: N.T.S.

CONTENT:

CONSTRUCTION DETAILS

SHEET NO: 36

C9.3

PLUMBING SPECIFICATIONS

Provide all plumbing items indicated on the drawings, described herein or otherwise required for a complete and proper installation, including:
A. Plumbing fixtures, fittings and equipment.
B. Hot and cold water systems.
C. Drain waste and vent piping systems.
D. Indirect waste piping, including all valves, traps, piping and accessories for all equipment. Size per equipment requirements.

Comply with all applicable codes, standards and ordinances, including requirements of the Georgia State Minimum Standard Plumbing Code (2018 International Plumbing Code with all Georgia State Amendments), Georgia State Minimum Standard Gas Code (2018 International Gas Code with all Georgia State Amendments), Georgia State Minimum Standard Energy Code (2015 International Energy Conservation Code with all Georgia State supplements and Amendments), and the DOJ 2010 ADA Standards for Accessible Design with Georgia Amendments of Rule 120-3-20.

The contractor should not attempt to precisely scale dimensions from these drawings to obtain construction dimensions and clearance. The contractor shall verify all actual dimensions and clearances. Although these plans are diagrammatic in nature, they shall be followed as closely as site conditions, new construction, and work by other trades shall permit. Deviations from these drawings, which are required to conform to the available space or to actual building construction, shall be made at no additional cost to the owner.

The submission of a bid or proposal will be construed as evidence that the contractor has familiarized himself with the plans and building site. Claims made subsequent to the proposal for materials and/or labor due to difficulties encountered will not be recognized unless these difficulties could not have been foreseen, even though proper examination had been made.

Fabrication or ordering of any material or equipment prior to verification of site conditions shall be done at the contractor's risk.

All equipment and material shall be new and of first quality. Equipment and material shall be the same or equal to the basis of design listed on these drawings.

Coordinate with all trades and verify all equipment rough-in items and locations with the equipment supplier or contractor. All re-work and corrections required due to lack of coordination shall be the contractor's responsibility, and done at no cost to the owner.

Submit shop drawings and material data submittals to the engineer for approval before installation. No substitutions shall be allowed without prior approval by the engineer. Product data for piping, insulation, valves, specialties and all fixtures and equipment scheduled and specified here. For each submittal for review, allow 15 days excluding delivery time to and from the Contractor.

All equipment and flue materials shall be U.L. listed.

Installation shall comply with manufacturer requirements including all clearances recommended for proper operation of service. All serviceable parts shall be readily accessible.

Sanitary drain, roof drainage and vent piping shall be ASTM D2665 schedule 40 PVC with PVC Socket Fittings (ASTM D 2665, made to ASTM D 3311, drain, waste, and vent patterns and to fit Schedule 40 pipe). Slope pipe sizes 6" and under at 1/8 inch per foot continuously toward public sewer. Slope pipe sizes 8" and larger at 1/16 inch per foot continuously toward public sewer. All aboveground piping shall be adequately supported. Install underground, PVC plastic drainage piping according to ASTM D2321. Install aboveground PVC piping according to ASTM D 2665. Cellular Core PVC (Foam Core PVC) not acceptable. Provide PVC IPEX type 1 expansion joints on alternating floors on horizontal sewer, storm, and vent risers over 30 feet tall.

Insulate aboveground floor drains, traps, and sanitary drain piping within 10 feet of drain receiving condensate and equipment drain water below 60° with 1" thick type i performed glass-fiber pipe insulation, 1-1/2" cellular glass, or 1" flexible elestomeric.

All above ground domestic water distribution piping shall be ASTM D 2846, SDR11, schedule 40 CPVC with socket fittings. All piping shall be adequately supported. Disinfect all domestic water piping after installation. All underground domestic water distribution piping 1" and smaller shall be ASTM D 876 & ASTM F 877 PEX with no fittings underground. All underground domestic water distribution piping 1-1/4" and larger shall be ASTM D 1785 schedule 40 PVC with ASTM D 2466 PVC socket fittings. Wrap piping larger than 2" in return air plenums with fire barrier plenum rated wrap.

Chemical waste piping shall be Charlotte pipe Chemdrain CPVC chemical waste schedule 40 drainage dipe and fittings.

DOMESTIC WATER PIPING CLEANING

A. Clean and disinfect potable domestic water piping as follows:
   1. Purge new piping and parts of existing piping that have been altered, extended, or repaired before using.
   2. Use purging and disinfecting procedures prescribed by authorities having jurisdiction; if methods are not prescribed, use procedures described in either AWWA C651 or AWWA C652 or follow procedures described below:
      a. Flush piping system with clean, potable water until dirty water does not appear at outlets.
      b. Fill and isolate system according to either of the following:
         1) Fill system or part thereof with water/chlorine solution with at least 50 ppm (50 mg/L) of chlorine. Isolate with valves and allow to stand for 24 hours.
         2) Fill system or part thereof with water/chlorine solution with at least 200 ppm (200 mg/L) of chlorine. Isolate and allow to stand for three hours.
      c. Flush system with clean, potable water until no chlorine is in water coming from system after the standing time.
      d. Repeat procedures if biological examination shows contamination.
      e. Submit water samples in sterile bottles to authorities having jurisdiction.
B. Prepare and submit reports of purging and disinfecting activities. Include copies of water-sample approvals from authorities having jurisdiction.
C. Clean interior of domestic water piping system. Remove dirt and debris as work progresses.

Domestic water piping shall be insulated with Owens Corning type ASJ/SSL-II heavy density fiber glass with all service jacket. Insulation shall have a flame spread rating not to exceed 25 and a smoke density not to exceed 50 when tested in accordance with U.B.C. standard 42-1. Provide mastic on all joints and exposed ends of insulation. Insulate domestic Cold water piping in unconditioned spaces such as exterior corridors, attic, basements, etc with 1/2" thick insulation for piping 1-1/4" & smaller and 1" thick insulation for piping 1-1/2" & larger. Insulate all domestic Hot water supply and return piping with 1" thick insulation for piping 1-1/4" & smaller and 1-1/2" thick insulation for piping 1-1/2" & larger.

HW & CW Valves: Use pipe size valves, as shown below:
A. Ball: Spears CPVC True Union.
B. Check: Spears CPVC True Union.

Lavatory/ Sink supply fittings: NSF Standard: Comply with NSF/ANSI 61 Annex G, "Drinking Water System Components – Health Effects," for supply-fitting materials that will be in contact with potable water. Standard: ASME A112.18.1/CSA B125.1. Supply Stops: Chrome-plated-brass, one-quarter-turn, ball-type valve with inlet connection matching supply piping. Wheel handle operation. Risers: Chrome-plated, soft-copper flexible tube for exposed applications and ASME A112.18.6, braided- or corrugated-stainless-steel, flexible hose for conceal behind cabinet applications.

Provide ADA Supply and Drain Protective Shielding Guards on ADA fixtures that piping is exposed. Supply and Drain Protective Shielding Guards shall comply with ICC A117.1 and Americans with Disabilities Act (ADA) requirements. Manufactured plastic wraps shall cover hot and cold water supplies, trap, and drain piping.

All pipe hangers, clamps and channels shall be adequately sized to carry pipe loads and prevent sagging.

All other materials not specifically described but required for a complete and proper installation of work of this section, shall be new, first quality of their respective kinds, and as selected by the contractor subject to acceptance by the engineer.

Lay out the plumbing system in careful coordination with the drawings, determining proper elevations for all components of the system and using only the minimum number of bends to produce a satisfactorily functioning system. Follow the general layout shown on the drawings in all cases except where other work may interfere. Unless shown otherwise, lay out all pipes to fall within partition, wall floor, or roof cavities, and to not require furring other than as shown on the drawings.

Do not cut into or reduce the size of any load-carrying member without the prior approval of the architect. Install all pipes to clear all beams and obstructions.

Extend all plumbing vents above roof to parapet height.

Permanently close and make weatherproof any openings or penetrations of the building envelope made for plumbing systems. All wall and floor penetrations shall be sleeved. All exterior wall or foundation wall penetrations shall use a mechanical seal.

Coordinate all roof penetrations with architectural plans and building and roofing trades.

Provide shut-off balls valves and unions at all water connections to equipment and appliances.

Isolate all dissimilar metals with "EPCO" dielectric unions, except for brass or bronze valves with steel pipe.

Protect the potable water supply against backflow and siphonage from equipment, fixtures, etc., using approved backflow and anti-siphon devices.

Thoroughly clean all piping and equipment. Removing all dirt, rust, oil, and plaster.

Test Sanitary and storm drainage piping by plugging all openings and filling with water to a height equal to a 10 foot head. Allow to stand one hour or longer as required. Repair leaking joints and then re-test.

No work shall be covered until it has been inspected and accepted by the local authority.

Domestic water piping tests: Fill domestic water piping. Check components to determine that they are not air bound and that piping is full of water. Test for leaks and defects in new piping and parts of existing piping that have been altered, extended, or repaired. Leave new, altered, extended, or replaced domestic water piping uncovered and unconcealed until it has been tested and approved. Expose work that was covered or concealed before it was tested. Cap and subject piping to static water pressure of 50 psig (345 kPa) above operating pressure, without exceeding pressure rating of piping system materials. Isolate test source and allow it to stand for four hours. Leaks and loss in test pressure constitute defects that must be repaired. Repair leaks and defects with new materials, and retest piping or portion thereof until satisfactory results are obtained.

The entire system shall be warranted for a period of one (1) year beginning with Owner's acceptance of the work. All labor and materials necessary to repair or replace the system, or portions thereof, during that time shall be warranted for a period of one (1) year from the repair or replacement.

Install piping in concealed locations, unless otherwise indicated and except in equipment rooms, and service areas. Install piping indicated to be exposed and piping in equipment rooms and service areas at right angles or parallel to building walls. Diagonal runs are prohibited unless specifically indicated otherwise. Install piping above accessible ceilings to allow sufficient space for ceiling panel removal. Install piping to permit valve servicing. Install piping at indicated slopes. Install piping free of sags and bends. Install fittings for changes in direction and branch connections. Install piping to allow application of insulation. Select system components with pressure rating equal to or greater than system operating pressure. Install escutcheons for penetrations of walls, ceilings, and floors. Verify final equipment locations for roughing-in.

Confirm that millwork is constructed with adequate provision for the installation of counter top lavatories and sinks.

Seal fixtures to wall and floor surfaces with sealant, color to match fixture.

All vents thru roof (VTR) shall be offset a minimum of 10'-0" from all outside air intakes.

Provide Plastic Pipe Markers on all aboveground plumbing piping that Comply with ASME A13.1. Minimum information indicating flow direction arrow and identification of fluid being conveyed. Install labeling on pipe at intervals of not more than 20 feet and at least once in each room.

Provide a complete through penetration fire stopping assembly for fire resistance rated wall assemblies. The through penetration assembly must be listed by an approved third-party test agency (UL), and include the entire listed assembly with all notations. Refer to architectural drawings for fire wall locations.

Approved manufactures: (Items submitted shall be approved by architect and engineer. Architect and engineer reserve the right to reject any item substituted for basis of design item for any reason.)

Supplies & Traps: Engineered Brass CO., Mcguire, Charlotte Pipe, Brasscraft, IPS, Watts, Zurn
Floor Drains & Cleanouts: Zurn, Jay R Smith, Proset, Watts, Mifab, Wade, Josam, Sioux Chief, Oatey
Tankless Electric Water Heaters: A.O. Smith, Rheem, EEmax, Chronomite
Wall Hydrants/ Hose Bibbs: MIFAB, Jay R. Smith, Wade, Watts, Woodford, Zurn
CPVC Valves: American, NIBCO, Spears
Mop Sinks: Stern Williams, Acorn, Fiat
Wash Fountains: Acorn, Willoughby, Bradley
Eyewash: Stingray, Guardian, Acorn, Bradley, Haws, Speakman

FIXTURE AND EQUIPMENT SCHEDULE

#	FIXTURE TYPE	WASTE		WATER SUPPLY		WATER FIX. CONN.		MODEL NUMBER
		BELOW FLOOR	FIXTURE CONN.	COLD	HOT	COLD	HOT	
ESS	COMBINATION DRENCH SHOWER AND EYE/FACE WASH				1-1/4"		1-1/4"	ULINE H-10735
NFWH1	BACKFLOW PROTECTED AUTOMATIC DRAINING FREEZELESS HOSE BIBB			3/4"		3/4"		PRIER C-634
NFWH2	BACKFLOW PROTECTED AUTOMATIC DRAINING FREEZELESS HOSE BIBB				3/4"		3/4"	PRIER C-634
RPZ	REDUCED PRESSURE ZONE ASSEMBLIES			SEE DWGS.		SEE DWGS.		WATTS LF009.
FD	FLOOR DRAIN WITH WATERLESS TRAP PRIMER	SEE DWGS	SEE DWGS					ZURN Z730
GCO	GRADE CLEANOUT	SEE DWGS	SEE DWGS					WATTS CO-200-RX-4-60.
MOP	MOLDED HIGH-DENSITY COMPOSITE BASIN							PFMB2424

CONTRACTOR SHALL COORDINATE WITH CIVIL SHEET C9.2 & C9.1 AND ARCHITECT BEFORE ORDERING FIXTURES

WATER HEATER SCHEDULE

MARK	MANUFACTURER	MODEL NUMBER	TYPE	TURN ON (GPM)	KW	PHASE	VOLTAGE
WH	EEMAX	PRO SERIES XTP054480	TANKLESS ELECTRIC	0.5	54.0	3	480

NOTE: PROVIDE CORROSION RESISTANCE N4X6 CABINET

LEGEND

	BALL VALVE		COLD WATER
	CHECK VALVE		HOT WATER
	PIPE UP		SEWER
	PIPE DOWN	CW	COLD WATER
F.F.E.	FINISHED FLOOR ELEVATION	HW	HOT WATER
(TYP)	TYPICAL		STRAINER
N.T.S.	NOT TO SCALE	PDI-B(H)	PDI UNIT WATER HAMMER ARRESTOR

TOTAL ENGINEERS
169 New Street, Macon, GA 31201
(478)741-4632 - T.E. project # 25-101
www.totalengineers.com
GA COA NO # PEF009195 EXP: 06/30/2026

ESG ENGINEERING

GROUNDWATER WELLS #4 & #5

FOR THE
CITY OF FLOWERY BRANCH

REVISIONS

NO.	DESCRIPTION	DATE
2	ADDENDUM 2	

GEORGIA REGISTERED PROFESSIONAL ENGINEER KRUNAL M PATEL

DRAWN BY: KMP
CHECKED BY: KMP
DATE:
SCALE:

CONTENT:

PLUMBING SCHEDULES & SPECIFICATIONS

SHEET NO:

P0.1

Last Saved By: Owner
Plotted: 12/12/2025 10:41 AM
Drawing Path: Z:\2025\101 Well Project Chem Feed Building\Flowery Branch, GA\DRAWINGS\TE\25-101 PLUMBING.dwg

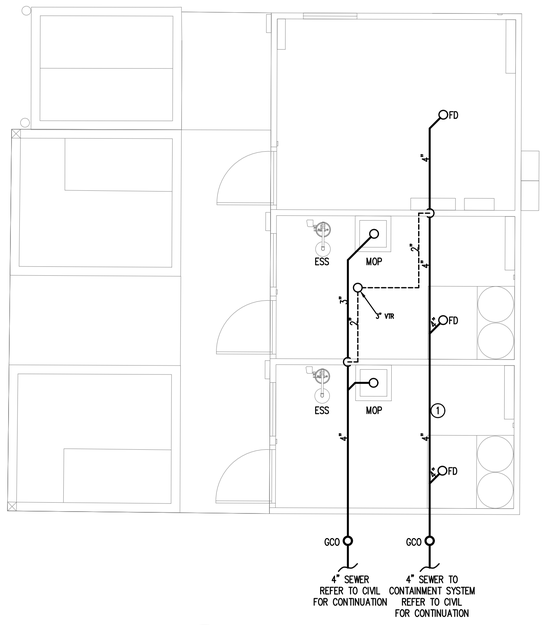

1 PLUMBING PLAN - SEWER
SCALE: 1/4"=1'-0"

KEY NOTES(THIS SHEET ONLY):

1. CONTRACTOR SHALL AVOID ALL HELICAL PILES AND FOOTERS FOR UNDERGROUND PLUMBING. TYPICAL FOR ALL UNDERGROUND PLUMBING.
2. DOMESTIC WATER LINES SHALL BE AFFIXED TO WALL OR HUNG FROM CEILING. TYPICAL FOR ALL PLUMBING PIPES.

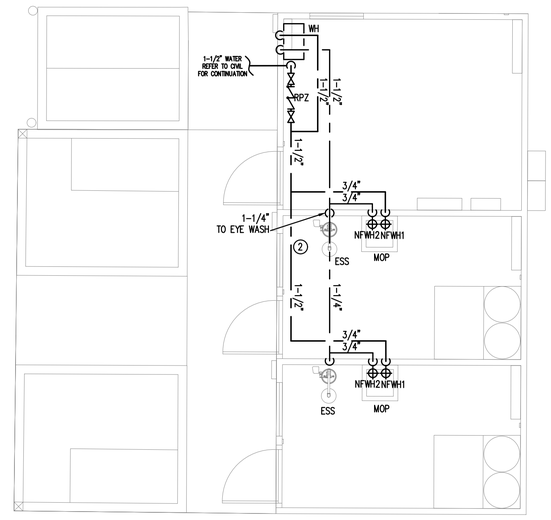

2 PLUMBING PLAN - WATER
SCALE: 1/4"=1'-0"

ESG ENGINEERING

GROUNDWATER WELLS #4 & #5

FOR THE

CITY OF FLOWERY BRANCH

REVISIONS

NO.	DESCRIPTION	DATE
2	ADDENDUM 2	

GEORGIA REGISTERED PROFESSIONAL ENGINEER KRUNAL M PATEL

DRAWN BY: KMP
CHECKED BY: KMP
DATE:
SCALE:

CONTENT:

PLUMBING PLANS

SHEET NO:

P1.0

TOTAL ENGINEERS
169 New Street, Macon, GA 31201
(478)741-4632 - T.E. project # 25-101
www.totalengineers.com
GA COA NO # PEF009195 EXP: 06/30/2026

Last Saved By: Owner
Plotted: 12/12/2025 10:41 AM
Drawing Path: Z:\2025\101 Well Project Chem Feed Building Flowery Branch, GA\DRAWINGS\TE\25-101 PLUMBING.dwg

SECTION 01025
MEASUREMENT AND PAYMENT

PART 1 – GENERAL

1.01 SCOPE OF WORK

A. This Section describes the methods by which measurement will be made of the quantities for which payment will be made for the Project.

B. The Bid lists each item of the Project for which payment will be made. No payment will be made for any items other than those listed in the Bid.

C. Required items of work and incidentals necessary for the satisfactory completion of the work which are not specifically listed in the Bid, and which are not specified in this Section to be measured or to be included in one of the items listed in the Bid, shall be considered as incidental to the work and whose cost shall be included in the item of the Bidder's choice. All costs thereof, including Contractor's overhead costs and profit, shall be considered as included in the lump sum or unit prices bid for the various Bid items. The Contractor shall prepare the Bid accordingly.

D. Work includes furnishing all labor, equipment, tools and materials, which are not furnished by the Owner and performing all operations required to complete the work satisfactorily, in place, as specified and as indicated on the Drawings.

1.02 MEASUREMENT OF WORK

A. Measurement methods delineated in the individual specification sections complement the criteria of this section. In the event of conflict, the requirements of the individual specification section govern.

B. Work shall be measured by the Engineer or his representative with assistance from the Contractor prior to preparation of a payment request by the Contractor.

C. Unit quantities that are measured in place shall be measured as they are placed. The Contractor shall give the Engineer a minimum of two days' notice for making all required measurements.

D. Materials that must be measured as delivered shall be measured at the time of delivery by the Engineer or his representative; the Contractor shall provide sufficient advance notice so that such measurements can be made.

E. Work necessary for a complete and operational job, such as relocation of mailboxes

or fences, removal of trees, relocation of utilities, graveling / maintaining driveways and driving lanes, field engineering, clearing and grubbing, traffic control, etc., not specifically identified as a pay item shall be included in the unit price bid of the Bidder's choosing. No additional payments will be made for such activities.

1.03 ESTIMATED QUANTITIES

All estimated quantities for unit price items, stipulated in the BID FORM, or other Contract Documents, are approximate and are to be used as a basis for comparing the bids submitted for the Project. The actual amounts of work done and materials furnished under unit price items may differ from the estimated quantities. The basis of payment for work and materials will be the actual amount of work done and materials furnished. The Contractor agrees to make no claim for damages, anticipated profits or otherwise on account of any difference between the amounts of work actually furnished and the estimated amounts included in the BID FORM. The Contractor will not be paid for any work which exceeds the quantity set forth in the BID FORM without a change order issued before the work is performed unless specifically ordered in writing by the Engineer. The Contractor will provide assistance to the Engineer to check quantities and elevations when so requested.

1.04 MEASUREMENT OF QUANTITIES

A. Measurement by Weight – Concrete reinforcing steel, rolled or formed steel or other metal shapes will be measured by handbook weights. Welded assemblies will be measured by handbook or scale weight.

B. Measurement by Volume – Measured by cubic dimension using mean length, width and height or thickness.

C. Measurement by Area – Measured by square dimension using mean length and width or radius.

D. Linear Measurement – Measured by linear dimension, at the item centerline or mean chord.

E. Stipulated Sum/Price Measurement – Items measured by weight, volume, area, or linear means or combination, as appropriate, as a completed item or unit of the Work.

1.05 PROGRESS PAYMENTS

A. Progress payments shall be based on percentage of work complete for lump sum pay items and units installed for unit price pay items.

B. All items of Work not specifically listed in the Bid Schedule shall be considered incidental to the construction, and the cost of all such work and material shall be

included in the item of the Contractors choice.

C. All items listed for measurement and payment shall include all materials, labor, and equipment necessary to successfully and satisfactorily complete Work specified.

D. Payment – The Contractor will receive payment only for the items listed in the Bid Schedule of his contract, and no separate payments will be made for the work under any section of the Contract Documents except as provided for in the Bid Form. Where measurements are required to be made by the Engineer, for the payment of a pay item, the failure of the Contractor to give the adequate notification or failure of the Contractor to give the engineer assistance for the measurement shall result in the forfeiture of payment for the work or item which was not measured.

PART 2 – PRODUCTS

2.01 STORED MATERIALS

A. Partial payment shall be made for approved materials stored at the project site, provided invoices for said materials are furnished in accordance with payment request submittal and shop drawings for said materials have been approved.

PART 3 – EXECUTION

3.01 CLEARING & GRUBBING

A. Measurement: Measurement for Clearing & Grubbing shall be on a lump sum basis and shall include all clearing & grubbing required for the project site, including the wells site & along the proposed water main alignment.

B. Payment: Payment for Clearing & Grubbing shall be on the basis of the lump sum price provided in the BID FORM and includes clearing and grubbing for all areas shown in the plans where the proposed work conflicts with existing vegetation/trees, and includes all trimming, tree removal, clearing, grubbing, root raking, hauling, disposal, and all labor, materials, tools, and equipment required.

3.02 DEMOLITION

A. Measurement: Measurement for Demolition shall be on a lump sum basis.

B. Payment: Payment for Demolition shall be on the basis of the lump sum price provided in the BID FORM and includes the demolition/removal of all existing site features in conflict with the proposed improvements as shown on the Plans, and includes hauling, disposal, and all labor, materials, tools, and equipment required.

3.03 GROUNDWATER WELLS #4 & #5 IMPROVEMENTS COMPLETE

A. Measurement: Measurement for Groundwater Wells #4 & #5 Improvements

Complete shall be on a lump sum basis.

B. Payment: Payment for Groundwater Wells #4 & #5 Improvements Complete shall be on the basis of the lump sum price provided in the BID FORM. Payment shall include all ancillary labor, materials, tools, testing, hauling/transportation, mobilization, and equipment required for a complete and functional project, including but limited to:

- Site grading, including all import fill material and removal, hauling, and disposal of excess materials
- Landscaping
- Gravel access drive & well site pad (incl. Tensar geogrid & GAB)
- Concrete sidewalk/walking areas and external chemical storage areas
- Protective bollards
- Yard hydrant installation (incl. all valves, fittings, etc.)
- Asphalt parking area (incl. Tensar geogrid & GAB)
- Chain link security fencing & gates
- Two (2) Groundwater Wells construction
    - Grundfos submersible pumps
    - Cables, supports, brackets, centralizers, hardware, etc.
    - Electrical & controls improvements
    - Discharge piping, fittings, transitions/connections, valves, & well casing pipe
    - Pressure gauges
    - Well pump enclosures
    - Support slabs (incl. reinforcement, concrete, Tensar geogrid, & crushed stone)
    - All other ancillary and miscellaneous work required to install the groundwater wells in accordance with the Construction Plans and Spec. Sections 432133 & 02514
- Ancillary Items for Chemical Feed Building
    - Building foundation
        - Foundation installation per Structural plan
        - Pile design & stamped drawing per helical pile engineer
        - Helical pile installation
    - Interior wall and floor coating system per construction drawings
    - All Mechanical/HVAC improvements shown on the mechanical plan
    - All Electrical improvements (incl. wiring, conduits, equipment, etc.)
    - All interior/exterior lighting improvements
    - Domestic water service tap w/ meter, backflow preventer, & box
    - All plumbing fixtures/appurtenances/piping/fittings as shown in the plumbing plans

    - Discharge piping pressure gauge
    - Chemical feed system for fluoride & chlorine
        - Eight (8) Grundfos chemical feed pumps per Spec. Section 70001
        - Feed line tubing/piping, valves, fittings, saddle taps, injection quills, hardware, etc. per Section 70001
        - Raceway/chase box installation
    - Building sewer lines, cleanouts, and connection to existing san. sewer main
    - Chemical containment pallets & ramps
    - Ultrasonic flow meters
    - Flanged DI piping, fittings, & valves
    - Pipe supports
    - All pipe/conduit cores/penetrations (incl. coring, link seals, & grouting)
    - Gutters & downspouts
    - All other ancillary and miscellaneous work required to install the chemical feed building in accordance with Spec. Section 02513 & the applicable drawings
- Covered steel structure
    - Stamped engineering design plans and applicable fees
    - Foundation/footers per detail & note on Sheet C9.4
    - Steel structure/shelter installed per detail drawings
    - Gutters & downspouts
    - All other ancillary and miscellaneous work required to install the steel structure in accordance with Section 90001 and the applicable drawings (provided by Renegade)
- Isolated chemical spill containment system (incl. floor drains, piping, fittings, precast structures, and coatings/linings)
- All restrained joint & flanged ductile iron yard piping, fittings, & valves located up to and including the 8”x6” reducer located outside of the backflow vault (see Sheets C4.0 & C4.1)
- Riser blowoff/sampling piping
    - Tapping saddle, spigot, fittings/adaptors, etc.
    - Insulated enclosure
    - Crusher run bedding
- Exterior pipe insulation system
- All pipe coating/lining and painting
- Backflow installation
    - Double Check Detector Assembly (DCDA)
    - Pressure gauge
    - Pipe supports & blocking
    - Precast concrete vault

    - Access hatch
    - Ladder
    - Stone bedding & Tensar geogrid
    - Pipe, fittings, and valves (incl. coring, link seals, & grouting)
    - Drainage piping
- All electrical & controls materials, workmanship, equipment, coordination, implementation, testing, and ancillary items not furnished & installed by the utility provider (GA Power)
- All other ancillary and miscellaneous items required to provide a complete and functional project as shown and described in the Construction Plans, Details, and Specifications.

3.04 PRE-FABRICATED CONCRETE BUILDING

A. Measurement: Measurement for Pre-fabricated Concrete Building shall be on a lump sum basis.

B. Payment: Payment for Pre-fabricated Concrete Building shall be on the basis of the lump sum price provided in the BID FORM and shall include the cost of providing and installing the manufactured concrete structure, including but not limited to factory provided cores, doors, windows, walls, roof, exterior painting/coating application, building/roof sealing and connections, and all labor, materials, tools, fees/taxes, coordination, and hauling/freight/shipping required.

3.05 SCADA & CONTROLS INTEGRATION WORK COMPLETE

A. Measurement: Measurement for SCADA & Controls Integration Work Complete shall be on a lump sum basis.

B. Payment: Payment for SCADA & Controls Integration Work Complete shall be on the basis of the lump sum price provided in the BID FORM and shall include the cost of all equipment, materials, and work shown and described in the SCADA/CSI Scope of Work, and all required off-site controls work integration/connections to the existing system(s), and all labor, materials, tools, testing, and hauling/freight required for a complete and functional SCADA system installation.

3.06 DIESEL GENERATOR INSTALLATION

A. Measurement: Measurement for Diesel Generator Installation shall be on a lump sum basis.

B. Payment: Payment for Diesel Generator Installation shall be on the basis of the lump sum price provided in the BID FORM and shall include the cost of the generator, concrete support slab, steel reinforcement, Tensar geogrid, crushed

stone, grading of local area, all required electrical work/connections, transfer switch integration and all labor, materials, tools, testing, and hauling/freight required for a complete and functional installation.

3.07 FIRE HYDRANT ASSEMBLY

A. Measurement: Measurement for Fire Hydrant Assembly shall be based on the number of fire hydrants that are installed.

B. Payment: Payment for Fire Hydrant Assembly shall be on the basis of the unit price provided in the BID FORM and shall include the cost of excavation, bedding, backfill, restrained hydrant tee, restrained hydrant lead pipe, 3-way fire hydrant, fittings/couplings, restraint/blocking, and all labor, materials, tools, testing, and hauling/freight required for a complete and functional installation.

3.08 GATE VALVE

A. Measurement: Measurement for Gate Valve shall be based on the number of valves that are installed.

B. Payment: Payment for Gate Valve shall be on the basis of the unit price provided in the BID FORM for valves of various sizes and shall include the cost of the gate valve, box, stem, cover, and all labor, materials, tools, testing, freight/hauling, and equipment required to install the gate valves where shown in the plans.

3.09 WATER MAIN – OPEN CUT

A. Measurement: Measurement for Water Main – Open Cut shall be on a per linear foot basis.

B. Payment: Payment for Water Main – Open Cut shall be on the basis of the unit price provided in the BID FORM and shall include the cost of pipe of various materials and sizes, excavation, bedding, & backfill, all adaptors/transitions/couplings, thrust blocking, restrained joint glands/gaskets, fittings (bends, tees, crosses, reducers, etc.), **connecting to existing water lines (where applicable)**, pipe cutting, and all freight/hauling, labor, materials, tools, testing, and equipment required.

3.10 WATER MAIN – HORIZONTAL DIRECTIONAL DRILL

A. Measurement: Measurement for Water Main – Horizontal Directional Drill shall be on a per linear foot basis.

B. Payment: Payment for Water Main – Horizontal Directional Drill shall be on the basis of the unit price provided in the BID FORM and shall include the cost of various sizes and materials of pipe, excavation, bedding, & backfill, pipe cutting,

fusing/welding, directional drill operation, drilling fluid, excavation of launching & receiving pits, and all freight/hauling, labor, materials, tools, testing, and equipment required.

3.11 WATER MAIN – OPEN CUT ROADS

A. Measurement: Measurement for Water Main – Open Cut Roads shall be on a per linear foot basis.

B. Payment: Payment for Water Main – Open Cut Roads shall be on the basis of the unit price provided in the BID FORM and shall include the cost of pipe of various materials and sizes, excavation, bedding, & backfill, Class "A" concrete, asphalt surface course, all adaptors/transitions/couplings, thrust blocking, restrained joint glands/gaskets, fittings (bends, tees, crosses, reducers, etc.), connecting to existing water lines, pipe cutting, and all freight/hauling, labor, materials, tools, testing, and equipment required.

3.12 TAPPING SLEEVE & VALVE INSTALLATION

A. Measurement: Measurement for Tapping Sleeve & Valve Installation shall be based on the number of hot-tap connections made to existing water lines/mains.

B. Payment: Payment for Tapping Sleeve & Valve Installation shall be on the basis of the unit price provided in the BID FORM and shall include the cost of the tapping sleeve & valve assembly of various sizes, tapping/connecting to existing water mains, valve riser & box/cover, and all freight/hauling, labor, materials, tools, testing, and equipment required.

3.13 CUT, CAP, & ABANDON WATER LINES

A. Measurement: Measurement for Cut, Cap, & Abandon Water Lines shall be on a per each basis.

B. Payment: Payment for Cut, Cap, & Abandon Water Lines shall be on the basis of the unit price provided in the BID FORM and shall include the cost of all excavations, isolating lines, pipe cutting, installation of two (2) ductile iron caps, backfill, and all freight/hauling, labor, materials, tools, testing, and equipment required.

3.14 WATER SERVICE TRANSFER

A. Measurement: Measurement for Water Service Transfer shall be on a per each basis.

B. Payment: Payment for Water Service Transfer shall be on the basis of the unit price provided in the BID FORM and shall include the cost of disconnecting the existing pipe, tapping saddle, corporation stop, installing new piping/tubing to match existing size, directional drill operation (if required), couplings/adapters,

and all labor, materials, tools, testing, freight/hauling, and equipment required to transfer existing water service lines to the new main.

3.15 TRAFFIC CONTROL

A. Measurement: Measurement for Traffic Control shall be on a lump sum basis for the entire project, including the wells site and along the proposed water main alignment shown in the BID FORM.

B. Payment: Payment for Traffic Control shall be at the lump sum price provided in the BID FORM and shall include all traffic control operations, labor, materials, signage, procedures, devices, and equipment required to adhere to the latest MUTCD, GDOT, and local standards and recommendations throughout construction.

3.16 EROSION CONTROL

A. Measurement: Measurement for Erosion Control shall be on a lump sum basis for the entire project, including at the wells site and along the proposed water main alignment.

B. Payment: Payment for Erosion Control shall be on the basis of the lump sum price provided in the BID FORM and shall include all NPDES permitting, NOI filing, inspection, sampling, record keeping, reporting, ES&PC signage, silt fence, check dams, temporary & permanent grassing, NOT filing, and all labor, materials, tools, testing, freight/hauling, and equipment required.

3.17 LANDSCAPING COMPLETE

A. Measurement: Measurement for Landscaping Complete shall be on a lump sum basis.

B. Payment: Payment for Landscaping Complete shall be on the basis of the lump sum price provided in the BID FORM and shall include the cost of providing and installing landscaping trees/shrubbery in accordance with the landscaping plan, as well as replacing/relocating any disturbed landscaping and landscaping features for the entire project site, including fencing, shrubbery, trees, planter beds, irrigation systems, specific grassing, planter beds, and all labor, materials, tools, testing, freight/hauling, and equipment required.

END OF SECTION

ADDENDUM #5
January 12, 2026

PROJECT: ***Groundwater Wells #4 & #5***

OWNER: City of Flowery Branch, GA

BID DATE: Original Bid Date – Thursday, December 18, 2025 at 2:00 P.M.
Revised Bid Date (Per Addendum #3) – Thursday, January 15, 2026 at 2:00 PM ET

The Bidder is hereby provided the following information:

1. **MISCELLANOUS INFORMATION**

   a. The Contract Time has been changed to 270 days.

   b. he Owner may consider issuing an Administrative Notice to Proceed authorizing the Contractor to issue purchase orders, submit and process submittals, and release equipment for fabrication while keeping the overall construction duration at 270 days.

All bidders shall acknowledge receipt of all addenda issued where indicated on the bid sheets. (Section 00410 – Bid Form, Page 2)

ATTENTION

ALL BIDDERS SHALL ACKNOWLEDGE RECEIPT OF ALL ADDENDA ISSUED WHERE INDICATED ON THE BID SHEETS. (SECTION 00410 – BID FORM, PAGE 2)

BIDDERS ARE MADE AWARE THAT IT IS THEIR RESPONSIBILITY TO VERIFY THAT ANY AND ALL ADDENDA HAVE BEEN RECEIVED PRIOR TO THE SUBMISSION OF THEIR BID. IN THE EVENT ANY BIDDER FAILS TO ACKNOWLEDGE RECEIPT OF ANY SUCH ADDENDA IN THE SPACE PROVIDED ON THE BID FORM, THEIR BID WILL BE CONSIDERED NONRESPONSIVE.

END ADDENDUM

ADDENDUM #6
January 14, 2026

PROJECT: ***Groundwater Wells #4 & #5***

OWNER: City of Flowery Branch, GA

BID DATE: Original Bid Date – Thursday, December 18, 2025 at 2:00 P.M.
Revised Bid Date (Per Addendum #3) – Thursday, January 15, 2026 at 2:00 PM
Revised Bid Date (Per Addendum #6) – Thursday, January 29, 2026 at 1:00 PM

The Bidder is hereby provided the following information:

1. **MISCELLANOUS INFORMATION**

   a. The Bid Date has been changed to Thursday, January 29, 2026 at 1:00 PM ET.

   b. Per Section 01025 – Measurement & Payment, the pre-engineered covered steel structure/shelter, footers, roof, gutter system, connections, etc. shall be the responsibility of the Contractor. See Section 90001 for the requirements of this structure. All costs shall be included under the line item in the Bid Form for "Groundwater Wells #4 & #5 Improvements Complete".

   c. A temporary sediment trap (Sd-4) will be required on site and is to be constructed in accordance with the GSWCC Field Manual for Erosion Control, latest edition. Final location to be coordinated with the Engineer. All costs shall be included under "Erosion & Sediment Control Complete".

All bidders shall acknowledge receipt of all addenda issued where indicated on the bid sheets. (Section 00410 – Bid Form, Page 2)

ATTENTION

ALL BIDDERS SHALL ACKNOWLEDGE RECEIPT OF ALL ADDENDA ISSUED WHERE INDICATED ON THE BID SHEETS. (SECTION 00410 – BID FORM, PAGE 2)

BIDDERS ARE MADE AWARE THAT IT IS THEIR RESPONSIBILITY TO VERIFY THAT ANY AND ALL ADDENDA HAVE BEEN RECEIVED PRIOR TO THE SUBMISSION OF THEIR BID. IN THE EVENT ANY BIDDER FAILS TO ACKNOWLEDGE RECEIPT OF ANY SUCH ADDENDA IN THE SPACE PROVIDED ON THE BID FORM, THEIR BID WILL BE CONSIDERED NONRESPONSIVE.

END ADDENDUM



Public Hearing Procedures to Consider Ordinances

SUMMARY

At the April 2nd Public Hearing the City Council approved the 2nd reading of an Ordinance to codify the procedures for Ordinance Consideration.

EST 1874 FLOWERY BRANCH

In accordance with Code Section 2.12, an ordinance may not be adopted / approved on the same day it is introduced. Therefore, the first read is not obligated to be an approved / denied consideration.

EST 1874 FLOWERY BRANCH

Per Code Section 35.9 there are four options for ordinance considerations at the conclusion of the public hearing.

Vote to deny ordinance passage, regardless of whether the ordinance is before the governing body for a **first** or **second** read, provided that a denial of the ordinance upon its first read shall preclude the necessity of a second reading, and such denial shall be considered final action

Example motion: I make a motion to deny ordinance 222.

*Annexations carry an extra consideration. The property must also be rezoned to a City zoning category. Because of this, annexation and rezoning ordinances should be considered hand-in-hand. To protect the City's legal interests, any approval or denial of an annexation should also include approval or denial of the rezoning.

EST 1874 FLOWERY BRANCH

Allow an ordinance that has only had one read to advance to a second reading, provided that any ordinance not denied after the first reading shall advance to a second reading and appear as an agenda item at the next regular meeting of the governing authority notwithstanding whether the governing authority voted to advance the ordinance to a second reading;

Example motion: I make a motion advance ordinance 222 to it's second reading at the next regular council meeting.

Vote to amend an ordinance, regardless of whether the ordinance is before the governing body for a first or second read, provided that final approval of an amended ordinance shall require an affirmative vote after a second reading.

Example motion if at first reading: I make a motion to amend conditions of ordinance 222 to add a condition that the sidewalk fronting Phil Niekro Blvd be extended to the intersection of Atlanta Highway and to advance the ordinance to the next regular council meeting.

Example Motion at a second reading: I make a motion to approve ordinance 222 as amended and with staff recommended conditions.

EST 1874 FLOWERY BRANCH

Vote to postpone the second reading of an ordinance or vote to postpone the final vote regarding an ordinance after a second reading, provided that such postponement and final vote shall be held no more than ninety (90) days from the date of the public hearing.

Example Motion: I make a motion to postpone a vote to the May 21st regular council meeting so the applicant can design and deliver architectural elevations that include more than 50% brick or stone on the front façade of each floorplan.

EST 1874 FLOWERY BRANCH



Questions or Concerns?

FLOWERY BRANCH CITY COUNCIL

EXECUTIVE SUMMARY

SUBJECT: Consider amendments to Ordinances 239-N and 240-N to clarify the allowed uses at the Sterling on the Lake outparcels designated as commercial uses on the PUD master plan.

DATE: April 16th, 2026

BUDGET INFORMATION:
ANNUAL- N/A
CAPITAL- N/A

(X)RECOMMENDATION
( ) POLICY DISCUSSION
( ) STATUS REPORT
( ) OTHER

COUNCIL ACTION REQUESTED ON: First Read April 16th, 2026 and Second Read May 7th, 2026

PURPOSE: Adopt amendments to Ordinances 239-N & 240-N to clarify the allowed uses at the Sterling on the Lake outparcels designated as commercial uses on the PUD master plan.

HISTORY: Recently, the Department of Planning and Community Development attended meetings with developers interested in the development of the subject parcels that included convenient stores. Per the approved ordinances the parcels are limited to uses consistent with the Neighborhood Shopping (NS) zoning category.

FACTS AND ISSUES: The current Neighborhood Shopping (NS) zoning code prohibits convenience stores, with or without fuel pump stations; however, such uses were not prohibited at the time the PUD ordinances were adopted. These amendments clarify that convenience stores, with or without fuel pumps, are not permitted on the subject properties.

RECOMMENDED SAMPLE MOTION:
I move to advance the amendments to Ordinances 239-N and 240-N to the May 7th, 2026 Public Hearing

DEPARTMENT: Planning and Community Development

Prepared by: Chris McCrary

Public Hearing Published 04/08/2026 First Reading 04/16/2026
Public Hearing 05/07/2026 Second Reading 05/07/2026

ORDINANCE NO. 239-N & 240-N

AN ORDINANCE AMENDING THE ZONING AND CONCEPTUAL SITE PLAN FOR THE MASTER PLANNED COMMUNITY KNOWN AS "STERLING ON THE LAKE" SPECIFICALLY RELATING TO ORDINANCE NUMBERS 239 AND 240 AND ALL AMENDMENTS THERETO INCLUDING BUT NOT LIMITED TO ORDINANCE NUMBERS 239-D AND 240-D; TO CLARIFY THE PERMISSIBLE USES FOR COMMERICAL NODES WITHIN SAID COMMUNITY; PROVIDING FOR FINDINGS, SEVERABILITY, REPEALING CONFLICTING ORDINANCES, AND FOR ALL OTHER LAWFUL PURPOSES.

WHEREAS, the two commercial nodes within the Sterling on the Lake Community are identified by Tax Parcel Identification Nos. 15047 000885E and 15047 000885C and are shown on Exhibit "A"; and

WHEREAS, the specific uses allowed on those subject parcels are shown on attached exhibit "B"; and

WHEREAS, the City Council of the City of Flowery Branch has considered the standards set forth in Article 34 - Section 34.7 of Zoning Ordinance of the City of Flowery Branch, Georgia; and

WHEREAS, the City Council held a public hearing at the meeting of May 7, 2026 duly noticed as prescribed by law and published in the Gainesville Times, regarding, as shall be set forth in the minutes of said meeting.

NOW THEREFORE, THE COUNCIL OF THE CITY OF FLOWERY BRANCH DOES HEREBY ORDAIN AS FOLLOWS:

SECTION 1. FINDINGS.

The City Council finds that the proposed modified rezoning clarification of the current PUD (Planned Unit Development) is consistent with the adopted standards for governing the exercise of the zoning power consistent with O.C.G.A § 36-66-5 and requirements of the Zoning Ordinance as identified below.

l. The proposed clarification will permit a use that is suitable in view of the use and development of adjacent and nearby property.

2. The proposed clarification is not expected to adversely affect the existing use or usability of adjacent or nearby property.

3. The proposed clarification could be used in accordance with the existing regulations and has a reasonable economic use as currently zoned PUD.

4. This proposed clarification if approved is not expected to result in a use which will or could cause an excessive or burdensome use of existing streets, transportation facilities, utilities, or schools.

5. The proposed clarification is in conformity with the policy and intent of the comprehensive plan and the character area map and future land use plan map.

6. The proposed clarification is considered appropriate in view of existing use(s) and zoning of the subject property and nearby properties.

7. No determination has been made by staff with regard to the value differential between development under the current zoning as opposed to the modified PUD.

8. The proposed clarification will not be a deterrent to the value or improvement of development of adjacent property in accordance with existing regulations.

9. There are no known adverse effects that would result from the clarification in the zoning district map, or change in use, on the character of a zoning district.

10. The proposed clarification is not expected to impact on the environment, including but not limited to, drainage, soil erosion and sedimentation, flooding, air quality and water quality. Compliance with city subdivision and land development regulations will be required, which include but are not limited to soil erosion and sedimentation, stormwater, and flood damage prevention.

SECTION 2. CONDITIONS.

The zoning of the subject parcels, as shown and described on Exhibit "A", to a modified PUD (Planned Unit Development) are to be subject to use conditions as set forth in Exhibit "B". Said Exhibits are incorporated by reference as if fully set forth herein.

SECTION 3. AMENDMENT OF THE ZONING MAP.

This Ordinance is enacted as an amendment to the Zoning Map of Flowery Branch, Georgia. Accordingly, the Zoning Administrator is hereby authorized to update the Official Map consistent with Article 3 of the Zoning Ordinance.

SECTION 4. SEVERABILITY.

Should any section or provision of this Ordinance be declared invalid or unconstitutional by any court of competent jurisdiction, such declaration shall not affect the validity of this Ordinance as a whole or any part thereof which is not specifically declared to be invalid or unconstitutional.

SECTION 5. EFFECTIVE DATE.

The effective date of this Ordinance shall be upon adoption by the City Council of the City of Flowery Branch, Georgia.

SECTION 6. REPEALER

All ordinances and parts of ordinances in conflict herewith are hereby repealed to the extent of the conflict.

Adopted this 7th day of May, 2026.

_____

Oliver McClellan, Mayor

_____

Shelia Cooper, City Clerk

APPROVED AS TO FORM:

_____

Ted Baggett, City Attorney

Exhibit A

Tax Parcel 15047 000885E consisting of more or less 7.86 acres and sitting at the intersection of Capitola Farm Road and Spout Springs Road.

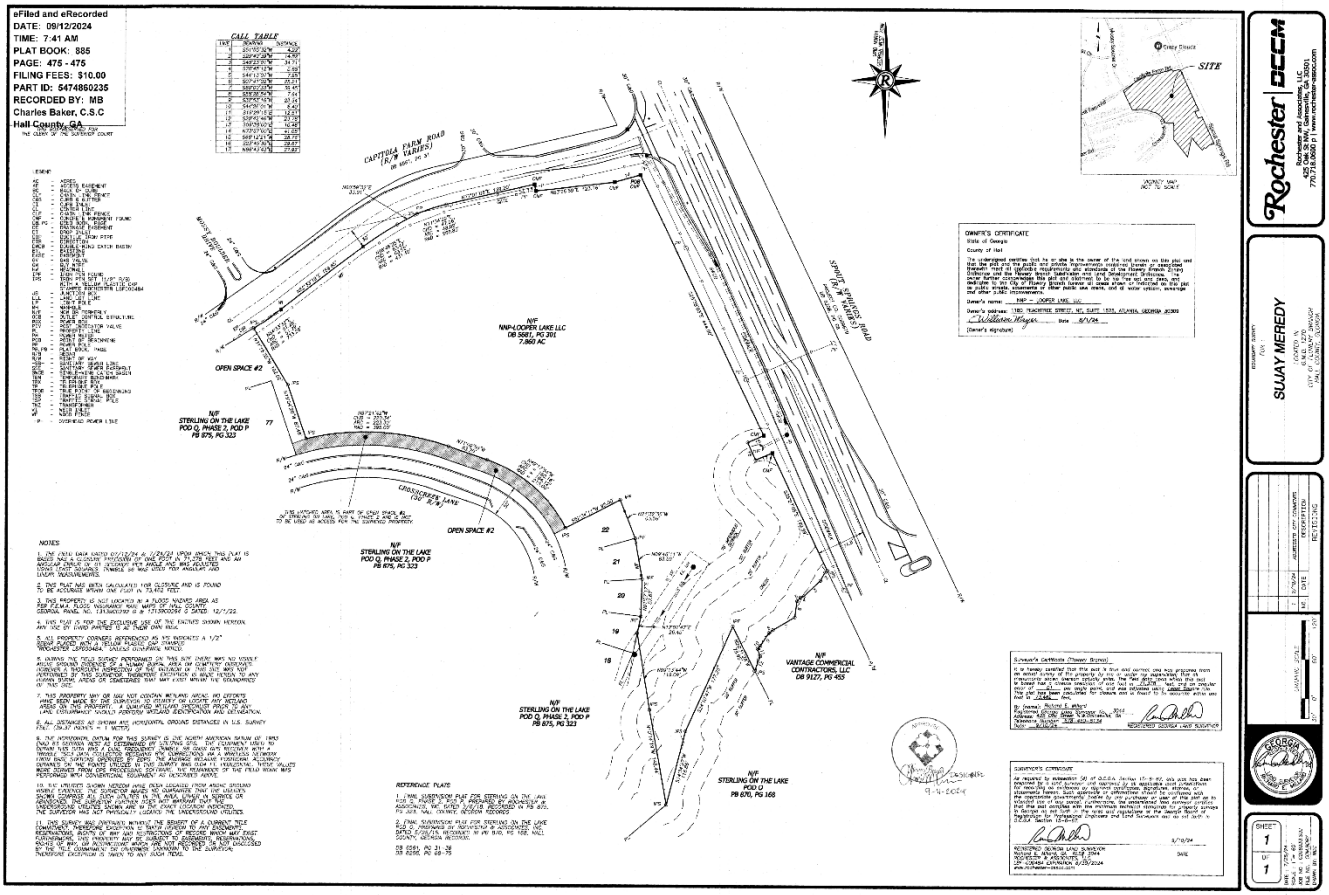

Hall County Tax Parcel 15047 000885C consisting of more or less 4.17 acres and sitting at the intersection of Spout Springs Road and Lake Stirling Boulevard.

Legal Description:

ALL THAT TRACT OR PARCEL OF LAND LYING AND BEING IN G.M.D. 1270, HALL COUNTY, GEORGIA AND BEING MORE PARTICULARLY DESCRIBED AS FOLLOWS:

TO FIND THE POINT OF BEGINNING, COMMENCE AT THE INTERSECTION OF THE SOUTHEASTERLY RIGHT-OF-WAY OF CAPITOLA FARM ROAD (VARIABLE RIGHT-OF-WAY) AND THE SOUTHWESTERLY RIGHT-OF-WAY OF SPOUT SPRINGS ROAD A DISTANCE OF 1050 FEET TO AN IRON PIN SET AND THE POINT OF BEGINNING; THENCE CONTINUING ALONG SAID RIGHT-OF-WAY OF SPROUT SPRINGS ROAD SOUTH 25 DEGREES 23 MINUTES 09 SECONDS EAST A DISTANCE OF 400.34 FEET; THENCE CONTINUING ALONG SAID RIGHT-OF-WAY SOUTH 25 DEGREES 44 MINUTES 31 SECONDS EAST A DISTANCE OF 339.29 FEET TO AN IRON PIN SET; THENCE LEAVING SAID RIGHT-OF-WAY ALONG THE NORTHWESTERLY RIGHT-OF-WAY OF LAKE STERLING BOULEVARD (VARIABLE PUBLIC RIGHT-OF-WAY) THENCE ALONG SAID NORTHWESTERLY RIGHT-OF-WAY OF LAKE STERLING BOULEVARD THE FOLLOWING COURSES AND DISTANCES:

SOUTH 63 DEGREES 52 MINUTES 21 SECONDS WEST A DISTANCE OF 42.94 FEET TO AN IRON PIN SET; THENCE

SOUTH 68 DEGREES 07 MINUTES 06 SECONDS WEST A DISTANCE OF 143.11 FEET TO AN IRON PIN SET; THENCE

SOUTH 57 DEGREES 02 MINUTES 09 SECONDS WEST A DISTANCE OF 226.31 FEET TO AN IRON PIN SET; THENCE

LEAVING SAID RIGHT-OF-WAY ALONG PROPERTY NOW OR FORMERLY STERLING ON THE LAKE COMMUNITY ASSOCIATION, DEED BOOK 7635, PAGE 870; THENCE ALONG SAID PROPERTY LINE THE FOLLOWING COURSES AND DISTANCES:

NORTH 32 DEGREES 57 MINUTES 51 SECONDS WEST A DISTANCE OF 208.12 FEET TO AN IRON PIN SET; THENCE
NORTH 68 DEGREES 36 MINUTES 37 SECONDS WEST A DISTANCE OF 12.84 FEET TO AN IRON PIN SET; THENCE
NORTH 00 DEGREES 01 MINUTES 25 SECONDS EAST A DISTANCE OF 27.90 FEET TO AN IRON PIN SET; THENCE
NORTH 63 DEGREES 24 MINUTES 31 SECONDS EAST A DISTANCE OF 225.90 FEET TO AN IRON PIN SET; THENCE
NORTH 20 DEGREES 34 MINUTES 53 SECONDS EAST A DISTANCE OF 66.83 FEET TO AN IRON PIN SET; THENCE
NORTH 26 DEGREES 31 MINUTES 26 SECONDS WEST A DISTANCE OF 417.16 FEET TO A POINT; THENCE
NORTH 20 DEGREES 42 MINUTES 46 SECONDS EAST A DISTANCE OF 23.78 FEET TO A POINT; THENCE
NORTH 19 DEGREES 29 MINUTES 15 SECONDS WEST A DISTANCE OF 12.51 FEET TO A POINT; THENCE
NORTH 44 DEGREES 26 MINUTES 01 SECONDS EAST A DISTANCE OF 6.40 FEET TO A POINT; THENCE
NORTH 32 DEGREES 53 MINUTES 16 SECONDS EAST A DISTANCE OF 23.54 FEET TO A POINT; THENCE
NORTH 07 DEGREES 41 MINUTES 02 SECONDS EAST A DISTANCE OF 25.21 FEET TO A POINT; THENCE
NORTH 44 DEGREES 13 MINUTES 07 SECONDS EAST A DISTANCE OF 7.95 FEET TO A POINT; THENCE
NORTH 70 DEGREES 45 MINUTES 12 SECONDS EAST A DISTANCE OF 5.68 FEET TO A POINT; THENCE
NORTH 45 DEGREES 23 MINUTES 01 SECONDS EAST A DISTANCE OF 34.71 FEET TO A POINT; THENCE
NORTH 29 DEGREES 49 MINUTES 39 SECONDS EAST A DISTANCE OF 14.82 FEET TO A POINT; THENCE
NORTH 53 DEGREES 12 MINUTES 30 SECONDS EAST A DISTANCE OF 3.96' FEET TO AN IRON PIN SET ALONG THE SOUTHWESTERLY RIGHT OF WAY OF SPROUT SPRINGS ROAD AND THE POINT OF BEGINNING.

SAID TRACT CONTAINING 181,329 SQUARE FEET OF 4.1627 ACRES.

DESCRIPTION WAS CREATED AS A RESULT OF REVIEW OF RECORDED DOCUMENTS, PHYSICAL EVIDENCE LOCATED AND MINIMUM TECHNICAL STANDARD FOR PLAT CLOSURE OF 2020 ALTA/NSPS LAND TITLE SURVEYS.

THE ABOVE IS THE SAME PROPERTY AS DESCRIBED IN TITLE COMMITMENT:

AUGUSTA TITLE, INC.

Commitment No.: 84710

Commitment Date: MAY 19, 2021 at 8:00 a.m.

Public Hearing Published 04/08/2026 First Reading 04/16/2026
Public Hearing 05/07/2026 Second Reading 05/07/2026

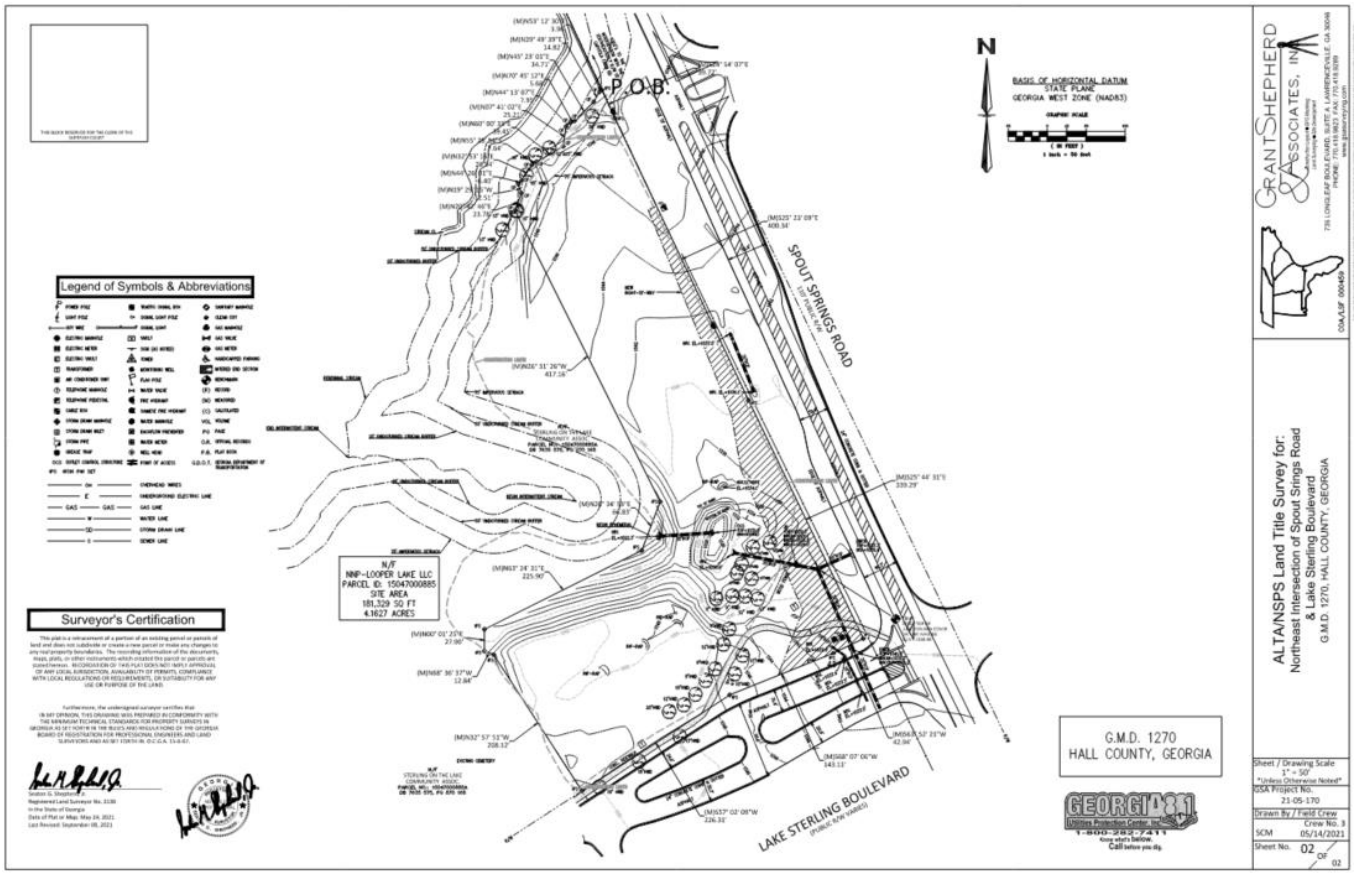

Exhibit B

Permitted Uses on the Commercial Development Sites. The commercial development sites referred to in Section 23 of Exhibit B of Ordinance 239-D and 240-D as "both the 4.17 more or less acre site and the "existing" commercial site shown on the Master Plan for Stirling on the Lake" and identified herein by their Hall County Tax Parcel numbers shall be limited to those uses allowed in the Neighborhood Shopping (NS) Zoning District with the exception of the following uses that are prohibited:

a. Bed and Breakfast Inn.
b. Institutional residential living and care facility, serving no more than 17 persons.
c. Laboratory.
d. Live/work unit.
e. The following personal service establishments; tattoo or massage parlor and body piercing business.
f. Utility company substation.
g. Convenience store, with or without gasoline pumps.

City of Flowery Branch
Mayor & Council Attendance Sheet Per Diem Pay

Name: Oliver McClellan Month/Year: March 2026

	Meeting Date	Description of Meeting
1.	March 6th	GHCC Economic Development Council
2.	March 26th	GHCC Board of Directors Meeting
3.		
4.		
5.		
6.		
7.		
8.		

My signature certifies that I am eligible to be paid for ___2___ meeting dates, a maximum of 8 per month, in accordance with the Per Diem Pay as described in Ordinance 736, approved on April 3, 2025, and at a rate of $100.00 per meeting.

Total of $__200.00__

Oliver McClellan

Signature

City of Flowery Branch
Mayor & Council Attendance Sheet Per Diem Pay

Name: Joseph Mezzanotte Month/Year: 03/2026

	Meeting Date	Description of Meeting
1.	3/3	South Hall Business Coalition - Eagle Ranch
2.	3/10	GHCC - Small Business Round table
3.	3/18	GHCC - Monthly Issues
4.	3/26	GHCC - Board Meetings
5.		
6.		
7.		
8.		

My signature certifies that I am eligible to be paid for 4 meeting dates, a maximum of 8 per month, in accordance with the Per Diem Pay as described in Ordinance 736, approved on April 3, 2025, and at a rate of $100.00 per meeting.

Total of $ 400.00

Joseph E Mezzanotte
Signature

City of Flowery Branch
City Council Meeting
Thursday, April 2, 2026, 6:00 PM
5410 Pine Street
Flowery Branch, GA 30542

Call Work Session to Order:

Mayor McClellan called the meeting to order at 6:00 p.m.

Present: Mayor McClellan and Council Members Chris Mundy, Joseph Mezzanotte, William McDaniel, Charles Vanderbilt and Pete Lena.

Also present were City Manager Tonya Parrish, City Clerk Shelia Cooper, Finance Director Matthew Hamby, Human Resources Director Krystle Hightower, Planning & Community Development Director Chris McCrary, Fun Director Renee Carden, Public Utilities Director Peter Woerner, Public Works Director Bill Whidden, Police Chief Chris Hulsey, and City Attorney Ted Baggett.

Pledge of Allegiance:

Mayor McClellan led the Pledge of Allegiance.

Adoption of Agenda:

There was a motion made to adopt the agenda as presented.

Motion:	Chris Mundy
Second:	William McDaniel
Ayes:	Chris Mundy, Joseph Mezzanotte, William McDaniel, Charles Vanderbilt, Pete Lena
Nays:	None
Result:	passed

Awards & Recognitions: There were no awards or recognitions

Public Hearing:

a. Public Hearing to Consider First Reading of Ordinance 774 for Annexation of 4651 and 4665 Hog Mountain Road, Public Hearing to Consider First Reading of Ordinance 775 for Rezoning of 4651 and 4665 Hog Mountain Road, Public Hearing to Consider First Reading of Ordinance 776 Variances at 4651 and 4665 Hog Mountain Road

City Clerk Cooper read the captions for Ordinances 774, 775, and 776.

Director McCrary presented Ordinances 774, 775, and 776 for annexation, rezoning and variance requests at 4651 and 4665 Hog Mountain Road. The applicant is proposing the annexation of 4651 & 4665 Hog Mountain Rd., a total of +/- 19.398 acres, from

unincorporated Hall County into the city limits of the City of Flowery Branch. In consideration of Ordinance 774 – Annexation into the city limits of the City of Flowery Branch for 4651 & 4665 Hog Mountain Rd., staff recommends approval of the annexation request. The proposal includes a request to rezone the property from Hall County AR-1 (Agricultural – Residential) and R-1 (Residential) to City of Flowery Branch SF-TH (Single-Family Townhome) for the construction of a 75-lot single-family detached residential subdivision. In consideration of Ordinance 775 – Rezoning from Hall County AR-1 & R-1 to City of Flowery Branch SF-TH for 4651 & 4665 Hog Mountain Rd., staff recommends approval of the rezoning request with conditions. In consideration of Ordinance 776, the applicant requests variances from the City of Flowery Branch Zoning Ordinance, including: (1) a variance from Section 7.4, Table 7.2 to reduce the minimum lot size within the SF-TH zoning district from 6,700 square feet to 5,500 square feet; and (2) a variance from Section 1021.c to allow residential streets exceeding 360 feet in length without the required 25-foot lateral deviation from a straight alignment; and (3) a variance from Section 1014, Table 10.1 to reduce radius of curvature of the center line from 275' to 48'. Based on the submitted application and supporting analysis, staff recommends approval of the requested variances subject to proffered conditions.

Council held a discussion with Director McCrary.

In Favor:
Charles Moore, High Point Development, 1776 Peachtree Street, Atlanta, Georgia 30309
Jaken French, High Point Development, 1776 Peachtree Street, Atlanta, Georgia 30309

In Opposition:
Alicia Grizzle, 5744 Newberry Point Drive, Flowery Branch, Georgia 30542
Penny Smucker, 5044 Cash Road, Flowery Branch, Georgia 30542
Phyrisanele Sante, 4625 Hog Mountain Road, Flowery Branch, Georgia 30542

Mayor McClellan closed the public hearing at 7:06 p.m.

Unfinished Business - Work Session: There was no unfinished business.

New Business - Work Session:

a. Tax Allocation District - Financial Update

Gary Mongeon, KB Advisory Group, presented a financial update on the Tax Allocation District (TAD). Mr. Mongeon provided and update on TAD existing conditions, preliminary TAD fund forecast, financing and bonding potential, and the next steps for TAD.

b. Consider Purchase of Trimble X9 Scanner

Heather McGuffey, Property and Evidence & Crime Scene Technician, presented a consideration of purchasing a Trimble X9 Scanner. The Trimble X9 laser scanning system is a valuable tool for expediting field data collection. The Trimble X9 collects higher-quality scans on difficult or dark surfaces and collects data faster and at a longer range. The X9 effectively captures data in any of the often-challenging scenarios that our Crime Scene and Crash Reconstructionist face. As a result, the time spent on site and the number

of personnel required to collect data is reduced. Timing is always critical on scenes, whether it be we are at an active scene and they are needing to clear the area, a large scene that would once take several personnel for several hours, or just to make our time more efficient. The high-density point clouds capture an industry-leading level of detail that improves the quality and accuracy of reconstructions and analysis. The benefits improve accuracy and transparency in investigations, reduce liability through defensible documentation, shared technology with the Police Department and Public Works Department, long-term cost savings through efficiency.

Council held a discussion with Mrs. McGuffey and Police Chief Hulsey.

Department Reports:

c. Department of Fun Report

Director Carden noted upcoming events.

g. Police Department Report

Chief Hulsey presented an update on the Police Department. He shared a new police video that highlights details of different aspects of the department. The Flowery Branch Police Department would like to thank Cherokee Bluff High School student, Maddox Abernathy, for this incredible highlight video.

i. Public Works Report

Director Whidden reported the Gaines Ferry round about is going along very well, and it is ninety percent paved.

j. Attorney Report

City Attorney Baggett was contacted last week by the Hall County attorney and asked about annexation and annexation objections about the Council's interest in entering into an Intergovernmental Agreement with Hall County for the acceptance of the stretch of Hog Mountain Road from Spouts Springs Road to Falcon Parkway to take it into the City's road system for purposes of maintenance. Should the City decide to do this, it would be an exchange for Hall County forbearing annexation objections on this road.

Council held a discussion with City Attorney Baggett.

There was a motion made to direct City Attorney Baggett to begin negotiations with Hall County with the direct statement that Council is willing to talk about taking over the road possibly if the road is brought up to City standards.

Motion:	Chris Mundy
Second:	William McDaniel
Ayes:	Chris Mundy, Joseph Mezzanotte, William McDaniel, Charles Vanderbilt, Pete Lena
Nays:	None
Result:	passed

k. Council Report

Council Member Mundy is glad to see Traffic Tip Tuesday from the Police Department back on social media.

Council Member Vanderbilt congratulated Captain Mahathey for successfully completing the Chief's class.

Adjournment Work Session:

Mayor McClellan adjourned the work session at 8:14 p.m.

Voting Session Agenda

Call Voting Session to Order:

Mayor McClellan called the voting session to order at 8:14 p.m.

Aubrey Duke, 7016 Tree House Way, Flowery Branch, Georgia 30542

Mr. Duke wanted to praise the Police Department, and he stated he learned so much valued information during the First Citizens Police Academy.

Abbie McBrayer, 5570 Spring Street, Flowery Branch, Georgia 30542

Mrs. McBrayer would like Council to review Ordinance 702, Condition 9 regarding a fence that is supposed to be erected in their backyard.

Director McCrary held a discussion with Council regarding the request from Mrs. McBrayer.

Consent Agenda:

- Consider March 19, 2026 City Council Meeting Minutes

There was a motion made to approve the Consent Agenda.

Motion:	Chris Mundy
Second:	William McDaniel
Ayes:	Chris Mundy, Joseph Mezzanotte, William McDaniel, Charles Vanderbilt, Pete Lena
Nays:	None
Result:	passed

Unfinished Business - Voting Session:

a. Consider Second Reading of Ordinance 778 for Text Amendments to Article 37 – Variances and Article 38 – Administrative Variances

City Clerk Cooper read the caption for Ordinance 778.

There was a motion made to approve the second reading of Ordinance 778.

Motion:	William McDaniel
Second:	Joseph Mezzanotte
Ayes:	Chris Mundy, Joseph Mezzanotte, William McDaniel, Charles Vanderbilt, Pete Lena
Nays:	None
Result:	passed

b. Consider Second Reading of Ordinance 779 for Text Amendments to Section 12.2 Public Hearing Procedures

City Clerk Cooper read the caption for Ordinance 779.

There was a motion made to approve the second reading of Ordinance 779.

Motion:	Charles Vanderbilt
Second:	William McDaniel
Ayes:	Chris Mundy, Joseph Mezzanotte, William McDaniel, Charles Vanderbilt, Pete Lena
Nays:	None
Result:	passed

New Business - Voting Session:

a. Consider First Reading of Ordinance 774 for Annexation of 4651 and 4665 Hog Mountain Road

City Clerk Cooper read the caption for Ordinance 774.

There was a motion made to approve the first reading of Ordinance 774 for annexation of 4651 and 4665 Hog Mountain Road.

Motion:	Charles Vanderbilt
Second:	Pete Lena
Ayes:	Chris Mundy, William McDaniel, Charles Vanderbilt, Pete Lena
Nays:	Joseph Mezzanotte
Result:	passed

b. Consider First Reading of Ordinance 775 for Rezoning of 4651 and 4665 Hog Mountain Road

City Clerk Cooper read the caption for Ordinance 775.

There was a motion made to approve the first reading of Ordinance 775.

Motion:	Chris Mundy
Second:	Charles Vanderbilt
Ayes:	Chris Mundy, Charles Vanderbilt
Nays:	Joseph Mezzanotte, William McDaniel, Pete Lena
Result:	failed

c. Consider First Reading of Ordinance 776 Variances at 4651 and 4665 Hog Mountain Road

City Clerk Cooper read the caption for Ordinance 776.

There was a motion made to approve the first reading of Ordinance 776 for Variances at 4651 and 4665 Hog Mountain Road

Motion:	Charles Vanderbilt
Second:	Chris Mundy
Ayes:	Chris Mundy, Charles Vanderbilt
Nays:	Joseph Mezzanotte, William McDaniel, Pete Lena
Result:	failed

d. Consider Purchase of Trimble X9 Scanner

There was a motion made to approve the purchase of Trimble X9 Scanner.

Motion:	William McDaniel
Second:	Pete Lena
Ayes:	Chris Mundy, Joseph Mezzanotte, William McDaniel, Charles Vanderbilt, Pete Lena
Nays:	None
Result:	passed

Executive Session: There was no executive session held.

Adjournment:

There was a motion made to adjourn the meeting at 8:29 p.m.

Motion:	Chris Mundy
Second:	William McDaniel
Ayes:	Chris Mundy, Joseph Mezzanotte, William McDaniel, Charles Vanderbilt, Pete Lena
Nays:	None
Result:	adjourn

_____	_____	_____
Oliver McClellan	Date	Shelia Cooper
Mayor		City Clerk

FLOWERY BRANCH CITY COUNCIL

EXECUTIVE SUMMARY

SUBJECT: Consideration to Award Bid #26-003 to Pro Pump Solutions of America, LLC for the White Horse Creek Lift Station Rehabilitation

DATE: March 23, 2026

(X) RECOMMENDATION
( ) POLICY DISCUSSION
( ) STATUS REPORT
( ) OTHER

BUDGET INFORMATION:
ANNUAL-
CAPITAL- $64,505.80

COUNCIL ACTION REQUESTED ON: APRIL 16, 2026

PURPOSE: The purpose of this item is to award bid #26-003 for the rehabilitation of White Horse Creek lift station located at 6334 Spring Cove Drive.

HISTORY: The City of Flowery Branch sought proposals for new equipment to be used in the rehabilitation of an existing sanitary sewer lift station.

The equipment specifications were as follows:

- Two (2) submersible pumps with a Proposed Design Point (single pump running): 175 gpm @ 195' TDH (Operating point must be within the manufacturer's recommended application range). Voltage: 460V
- Two (2) Soft Starts (Telemecanique ATS48D62YU) or similar model. Different Model Soft Starts submitted need to be approved by Department Director and City Engineer.

FACTS AND ISSUES: The City of Flowery Branch sought proposals to rehabilitate White Horse Creek Lift Station. The City received four (4) proposals, that of which, only three were valid once the pre-bid attendance was verified. The three (3) proposals belonged to Cornerstone H2O, Goforth Williamson, Inc. (GWI), and Pro Pump Solutions of America, LLC (Pro Pump Solutions).

Our Director of Public Utilities, City Engineer, and ESG Engineer reviewed the proposals to identify the most favorable proposal for the City. The proposals were scored for Non-Price Factors and Price Factors.

Non-Price Factors (40 Total Points):

1. Expected performance based on pump horsepower (HP) and efficiency at the design point
2. Ability to accommodate future design points (e.g., increased head or flow) with alternate impellers
3. Expected reliability based on manufacturer's experience and references
4. Quality of materials of construction
5. Proposed equipment delivery/lead times
6. Proposed equipment layout
7. Expected maintenance requirements
8. Quality of manufacturer's warranty
9. Terms and conditions of the manufacturer's purchase agreement
10. Proposal responsiveness:
    - Completeness
    - Organization and clarity

Price Factors (60 Total Points):

1. Total equipment cost
2. Suitability of equipment for the existing site – preference will be given to proposals requiring minimal demolition or modification of existing infrastructure

It was found that Pro Pump Solutions' pump efficiency was rated the highest at 46% while GWI was rated 29% and Cornerstone H2O rated 20%.

The overall scores for each contractor were as follows:
Cornerstone H2O – 71/100 points
Goforth Williamson, Inc. (GWI) – 81/100 points
Pro Pump Solutions of America, LLC – 82/100 points

OPTIONS:
1. Award bid #26-003 2. Do not Award bid #26-003.

RECOMMENDED SAMPLE MOTION: I move we award bid 26-003 White Horse Creek Lift Station Rehabilitation to Pro Pump Solutions of America, LLC in the amount of $64,505.80.

DEPARTMENT: Finance

Prepared by: Nancy Rodriguez

CITY OF FLOWERY BRANCH

Request for Proposal

RFP No. 26-003

White Horse Creek Lift Station Rehabilitation

RFP Release:	Wednesday, October 29, 2025
Mandatory Pre-Bid Meeting:	Tuesday, December 2, 2025, 9:30 a.m. EST.
RFP Questions Deadline:	Friday, December 5, 2025, 11:00 a.m. EST.
RFP Due Date:	Tuesday, January 13, 2026, 2:00 p.m. EST.

Postal Return and/or Courier Delivery Address:

City of Flowery Branch
Finance Department
5410 Pine Street
Flowery Branch, GA 30542

TABLE OF CONTENTS

BACKGROUND **3**

PROJECT INTRODUCTION **3**

PROPOSAL CORRESPONDENT **3**

PROPOSAL QUESTIONS **3**

PROPOSAL RESPONSE DATE AND LOCATION **3**

MANDATORY PRE-BID MEETING: **4**

PROPOSED SCHEDULE: **4**

SCOPE OF WORK **4**

WHITE HORSE CREEK LIFT STATION REHABILITATION

EQUIPMENT SPECIFICATIONS **4**

ADDITIONAL WORK **5**

PROPOSER RESPONSIBILITY **5**

LIABILITY AND INSURANCE **6**

PROPOSAL REQUIREMENTS **7**

EVALUATION CRITERIA **8**

AWARD AND EXECUTION **9**

GENERAL CONDITIONS **9**

PROPOSAL CERTIFICATION **13**

ADDENDUM ACKNOWLEDGEMENT **14**

PROPOSAL LABEL **15**

PROPOSAL INFORMATION SHEET **16**

EXHIBIT A **17**

BACKGROUND

Located on Lake Lanier and just over forty miles from Atlanta, Flowery Branch has maintained a picturesque historic downtown. Recent investment, including streetscape improvements and a revitalized train depot, is beginning to revitalize the downtown area, known as "Old Town." Many of the original buildings in the historic central business district still exist and have been rehabilitated and repurposed.

PROJECT INTRODUCTION

The City of Flowery Branch is seeking proposals for new equipment to be used in the rehabilitation of an existing sanitary sewer lift station. This Request for Proposals (RFP) is for the purchase of equipment only – installation is to be provided by Pro Pumps Solutions of America, LLC. via a separate contract.

The equipment specifications are as follows:

- Two (2) submersible pumps with a Proposed Design Point (single pump running): 175 gpm @ 195' TDH (Operating point must be within the manufacturer's recommended application range). Voltage: 460V
- Two (2) Soft Starts (Telemecanique ATS48D62YU) or similar model. Different Model Soft Starts submitted need to be approved by Department Director and City Engineer.

RFP CORRESPONDENT

Upon Release of this Proposal, all vendor communications concerning this acquisition must be directed to the Finance Department correspondent listed below:

City of Flowery Branch
Attn: Nancy Rodriguez
5410 Pine Street, Flowery Branch, GA. 30542
Phone: (770-967-6371) ext. 111
Nrodriguez@flowerybranchga.org

Unauthorized contact regarding the Bid with other City of Flowery Branch employees may result in disqualification. Any oral communications will be considered unofficial and non-binding on the City of Flowery Branch. Vendors should rely only on written statements issued by the Bid correspondent.

RFP QUESTIONS

All questions must be submitted in writing to the correspondent named above. Questions must be received by 11:00 a.m. EST on Friday, December 5, 2025. A list of questions and answers will be provided to all known Proposer and posted on the city website at www.flowerybranchga.org/BIDs.

RFP RESPONSE DATE AND LOCATION

The Finance Department must receive the vendors' proposals in a sealed envelope, in its entirety, no later than 2:00 p.m., Eastern Standard Time to 5410 Pine Street, Flowery Branch, Georgia on Tuesday, January 13, 2026. Proposals arriving after the deadline will be returned unopened to their senders. All proposals and accompanying documentation will become the property of the City of Flowery Branch and may not be returned. **Proposals must be clearly marked on the outside of the package with the Proposal Label.**

Vendors assume the risk of the chosen method of dispatch. The City of Flowery Branch assumes no responsibility for delays caused by any delivery service. Postmarking by the due date will not substitute for an actual proposal receipt. Late proposals will not be accepted, nor will additional time be granted to any vendor. Proposals may not be delivered by facsimile transmission or other telecommunication or solely by electronic means.

MANDATORY PRE-BID MEETING:

A mandatory pre-bid meeting will be held on Tuesday, December 2, 2025, at 9:30 a.m. EST at City Hall Community Room, 5410 Pine Street, Flowery Branch, GA 30542 to then travel to Lift Station site. Attendance is required for all interested vendors. Questions must be provided during this time or by the deadline of Friday, December 5, 2025, at 11:00 a.m. EST.

PROPOSED SCHEDULE:

BID Release:	Wednesday, October 29, 2025
Mandatory Pre-Bid Meeting:	Tuesday, December 2, 2025, 9:30 a.m. EST.
BID Questions Deadline:	Friday, December 5, 2025, 11:00 a.m. EST.
BID Due Date:	Tuesday, January 13, 2026, 2:00 p.m. EST.
City Council Award of Contract:	TBD
Contract Effective Date	TBD

SCOPE OF WORK

The City of Flowery Branch is seeking proposals for the supply of new equipment to be used in the rehabilitation of an existing sanitary sewer lift station (White Horse Creek Lift Station).
This Request for Proposals (RFP) is for the purchase of equipment only. Installation services will be provided separately by Pro Pumps Solutions of America, LLC under a different contract.

The specifications are provided as a minimal requirement only. The City will consider any product that meets or exceeds the minimum requirements. The Proposer shall provide information regarding the proposed product for evaluation by the City.

Evaluation of proposals will consider both quantitative (cost) and qualitative (non-cost) factors, weighted as outlined in the Proposal Requirements document.
If an award is made, the City will issue a purchase order to the successful Proposer within sixty (60) days of award notification.

WHITE HORSE CREEK REHABILITATION

I. Equipment Specifications

A. Submersible Pumps

- Quantity: Two (2)
- Proposed Design Point (single pump operating): 175 gallons per minute (GPM) @ 195 feet Total Dynamic Head (TDH)
- Operating point must fall within the manufacturer's recommended application range.
- Voltage: 460V

B. Soft Starters
- Quantity: Two (2)
- Model: Telemecanique ATS48D62YU or approved equal.
- Alternate models must receive approval from both the Department Director and the City Engineer prior to acceptance.

II. Additional Work

The City may add to these specifications with the joint approval of the Contractor and the City. All modifications shall be in writing.

A. In the event that the City requires additional work outside of these specifications, the Contractor shall perform all work at a competitive industry price.
B. Additional work may be added to the contract as the need arises. The Contractor shall perform all specified and approved additional work.
C. The Contractor must be willing to provide a competitive price for additional work that may be added to the contract. The contractor will be required to demonstrate the ability to properly execute the expanded workload.

PROPOSER RESPONSIBILITY

When determining whether a Proposer is responsible, or when evaluating a proposal, the following factors may be considered, any one of which will suffice to determine whether a Proposer is responsible, or the proposal is the most advantageous to the City:

A. The ability, capacity, and skill of the Proposer(s) to perform the contract or provide the equipment and/or service required.
B. The character, integrity, reputation, judgment, experience, and efficiency of the Proposer(s).
C. Whether the Proposer(s) can perform the contract within the time specified.
D. The quality of performance of previous public and private contracts or services, including, but not limited to, Proposer's failure to perform satisfactorily or complete any written contract. The City's termination for default of a previous contract with a Proposer, within the past three years, shall be deemed to be such a failure.
E. The previous and existing compliance by the Proposer(s) with laws relating to the contract or service.
F. Evidence of collusion with any other Proposer(s), in which case colluding Proposer(s) will be restricted from submitting further proposals on the subject project or future proposals, for a period not less than three years.
G. All employees, subcontractors or contractors performing cleaning services in any City-owned building must be submitted to pass a thorough criminal background investigation with no convictions, other than minor traffic violations.
H. The Proposer(s) have been convicted of a crime of moral turpitude or any felony, excepting convictions that have been pardoned, expunged, or annulled, whether in this state, in any other state, by the United States, or in a foreign country, province or municipality. The Proposer(s) shall affirmatively disclose to the City all such convictions, especially of management personnel or the Proposer(s) as an entity, prior to the notice of award or execution of a contract, whichever comes first. Failure to make such affirmative disclosure shall be grounds, in the City's sole opinion and discretion, for termination for default subsequent to the award or execution of the contract.
I. If the Proposer(s) will be unable, financially, or otherwise, to perform the work.
J. At the time of the proposal opening, the Proposer is not authorized to do business in Georgia, or otherwise lacks a necessary license, registration, or permit.
K. Any other reason deemed proper by the City.

LIABILITY AND INSURANCE

During the performance of the duties outlined in the Scope of Work of this proposal, the successful Proposer shall procure the following insurance, which shall be full coverage insurance not subject to self-insurance provisions, except for vehicle collision insurance and comprehensive automobile coverage and shall not, of the Contractor's initiative, cause such insurance to be cancelled or materially altered during the contract term. The Proposer must provide evidence, satisfactory to the City, of the following insurance requirements:

A. Owner requires the Proposer to have and maintain the following insurance coverage and indemnification provisions with the City of Flowery Branch named as an additional insured hereunder.

B. The Proposer agrees to provide and maintain insurance coverage until the contract is completed and to furnish certificates from its insurance carriers showing that it carries insurance in the following minimum limits:

▪ Workers' Compensation	Statutory Minimum $100,000/accident
▪ Employers Liability	$1,000,000
▪ Bodily Injury Liability	$1,000,000
▪ Except Automobile	$1,000,000 aggregate
▪ Property Damage Liability	$1,000,000 each occurrence
▪ Except Automobile	$1,000,000 each occurrence
▪ Automobile Bodily Injury	$1,000,000 each person
▪ Liability	$1,000,000 each occurrence
▪ Automobile Property Damage Liability	$1,000,000 each occurrence
▪ Excess Umbrella Liability	$2,000,000 each occurrence

C. PROOF OF INSURANCE

The Proposer shall furnish the Owner with certificates showing the type, amount, class of operations covered, effective dates, and date of expiration of policies. Such certificates shall also contain substantially the following statement: The insurance covered by this certificate will not be cancelled or materially altered, except after thirty (30) days written notice has been received by the Owner.

D. INDEMNIFICATION

The Proposer shall indemnify, protect, defend and hold harmless the City, and any and all of its employees, officials and agents from and against any liability (including liability for claims, suits, actions, arbitration proceedings, administrative proceedings, regulatory proceedings, losses, expenses or costs of any kind, whether actual, alleged or threatened, including attorney's fees and costs, court costs, interest, defense costs and expert witness fees), where the same arise out of, are a consequence of, or are in any way attributable to, in whole or in part, the performance of the contract by Proposer or by any individual or entity for which Proposer is legally liable, including but not limited to officers, agents, employees or subcontractors of Proposer.

PROPOSAL REQUIREMENTS

The following instructions outline the process for preparing and submitting Proposals. Proposers must fulfill all requirements as specified in this Request for Proposals (RFP).

Must submit one (1) original, and one (1) electronic copy on a flash drive.

A. Type of Proposal

The selection of new lift station equipment is being made through a Request for Proposal process, which includes consideration of both quantitative (cost) and qualitative (non-cost) factors. Price factors include capital costs, operation, and maintenance considerations.

The qualitative factors are an important selection criterion that the OWNER and ENGINEER believe impact the value and quality of the furnished product. The proposals received will be evaluated on both quantitative and qualitative factors as further discussed in the Basis of Selection Section.

B. Preparation of Proposals

Proposers shall complete the Proposal Information Sheet provided herein.

- All blank spaces on the forms must be filled in using blue or black ink.
- Where both figures and written amounts are requested, written amounts shall govern in the event of a discrepancy.
- The Proposer must acknowledge receipt of all addenda in their proposal.
- Proposals lacking acknowledgment or without required addenda may be considered non-conforming.
- Bid Bond not required if total proposal amount does not exceed two-hundred fifty thousand dollars ($250,000.00) per O.C.G.A. § 36-91-50.

C. Submission of Proposals

All Proposals must be submitted no later than the date and time prescribed, in the manner set forth in the Request for Proposals. Proposals must be made on the Proposal Information Sheet provided. Each Proposal must be submitted completely, in a single envelope, and must be clearly marked on the outside of the package with the Proposal Label.

D. Information Required in Proposal

Proposals must include sufficient technical and descriptive data to permit a complete evaluation. Submissions lacking necessary details will be considered non-responsive.

Each Proposal shall include the following documentation and information:

1. Completed Proposal Information Sheet
2. Pump Curve: showing Head vs. Flow on the X-Y axis and including horsepower (HP), efficiency, and recommended impeller model/diameter
3. Manufacturer's Catalog Information
4. Warranty Information
5. Equipment Delivery / Lead Time
    a. Time from purchase order issuance to delivery of submittals
    b. Time from submittal approval to delivery of all equipment/components
6. List of Model Reference Installations, including:
    a. Location
    b. Design Flow/Head

c. Number of Units
d. Date of Operation
e. Reference Contact Information
f. Make, Model, Weight and Horsepower of each pumping system
g. Identification of Material of Construction for:
    i. Impeller & Insert Ring
    ii. Pump Housing
    iii. Mechanical Seals
h. Dimensional Plan and Sections
i. Inlet and Discharge Piping Sizes
j. Electric Motor Nameplate Data
k. Painting / Coating Information
l. Maintenance Requirements and Frequencies
m. Narrative of how Required Maintenance Activities are to be performed (including parts that are to be removed to provide access for maintenance, etc.)
n. Control Panel Information – See Equipment Specifications
o. Miscellaneous / Installation Services - See Equipment Specifications

EVALUATION CRITERIA

The City of Flowery Branch, with the assistance of the Engineer, will evaluate proposals based on both quantitative and qualitative criteria. The evaluation process may include additional investigations deemed necessary to assess proposer performance, reliability, and capability.

The criteria listed below (total of 100 points) will be used for scoring; however, the City reserves the right to consider additional factors as deemed in the best interest of the project.

Proposals providing partial monetary refunds/discounts to the City in the event the proposed lead times are exceeded will be highly valued as part of the City's scoring/evaluation.

The City reserves the right to reject any or all proposals, or to waive informalities and irregularities, in order to act in the best interest of the project.

A. <u>Non-Price Factors (40 Points Total)</u>

1. Expected performance based on pump horsepower (HP) and efficiency at the design point
2. Ability to accommodate future design points (e.g., increased head or flow) with alternate impellers
3. Expected reliability based on manufacturer's experience and references
4. Quality of materials of construction
5. Proposed equipment delivery/lead times
6. Proposed equipment layout
7. Expected maintenance requirements
8. Quality of manufacturer's warranty
9. Terms and conditions of the manufacturer's purchase agreement
10. Proposal responsiveness:
    a. Completeness
    b. Organization and clarity

B. Price Factors (60 Points Total)

1. Total equipment cost
2. Suitability of equipment for the existing site – preference will be given to proposals requiring minimal demolition or modification of existing infrastructure

AWARD AND EXECUTION

The Owner's agreement will be executed directly with the equipment manufacturer. The Owner will either self-perform the installation or contract separately with ***Pro Pump Solutions of America, LLC*** for installation of the equipment.

The selected vendor shall provide startup services and a full manufacturer's warranty for all supplied equipment.

The City will select the proposal that, in its sole discretion, is determined to be the most responsive and responsible to the City's needs. The City reserves the right to make an award without further discussion of the submitted proposals; therefore, each proposal should be prepared and submitted on the most favorable terms available to the Proposer.

The City of Flowery Branch reserves the right to alter the specifications based on the Proposer's submittal and to negotiate increases or reductions in equipment or services with the selected manufacturer prior to award and execution.

Should the Owner require additional time to make an award, the award period may be extended by mutual agreement between the Owner and the successful Proposer. If an award has not been made within sixty (60) days of the proposal opening date (or within the mutually agreed-upon extension period), the Proposer may withdraw the proposal without further liability to either party.

GENERAL CONDITIONS

I. WAIVER OF TECHNICALITIES

All items must meet or exceed specifications as stated by the City of Flowery Branch. The City of Flowery Branch reserves the right to waive any technicalities and to reject or accept any proposal in its entirety or to accept any portion thereof if it is determined that either method results in lower costs, better service, final satisfaction or is otherwise determined to be in the best interest of the City of Flowery Branch. The award may be made by item number or in total. Determination of best response to proposal will be the sole judgment of the City of Flowery Branch. Proposal shall remain valid for sixty days from the date of bid opening.

II. BONDING REQUIREMENTS

Bid, performance and payment bonds shall be required for all contracts where the cost is two-hundred fifty thousand dollars ($250,000.00) or greater as required per O.C.G.A. § 36-91-50.

a. Bid Bonds
   i. The bid bond must be in an amount of not less than 5 percent of the total amount payable by the terms of the contract. In lieu of a bid bond, the city may accept a cashier's check, certified check, or cash deposit in an amount of not less than 5 percent of the total amount payable by the terms of the contract. If the contract does not exceed $750,000.00, the city may also accept an irrevocable letter of credit in lieu of the bid bond. No bid or proposal shall be considered to be complete unless a

bid bond has been submitted. O.C.G.A. § 36-91-50(d). If a bid bond is required and the contractor fails to provide it, the contract shall be invalid. O.C.G.A. § 36-91-50(d). The city must approve the form and solvency of the surety prior to acceptance of the bid or proposal. O.C.G.A. § 36-91-40(a)(2).

b. Performance Bonds
    i. The performance bond shall be in the amount of at least the total amount payable by the terms of the contract and shall be increased as the contract amount is increased. O.C.G.A. § 36-91-70. If the public works construction contract is less than $750,000.00, the local government may accept an irrevocable letter of credit instead of a performance bond. O.C.G.A. § 36-91-71. No public works construction contract requiring a performance bond shall be valid for any purpose unless the contractor shall give such performance bond. O.C.G.A. § 36-91-70. The affected city may recover any damages resulting from the contractor's breach by filing an action within one year of the completion of the project and acceptance of the work. O.C.G.A. § 36-91-72. The city must approve the form and solvency of the surety prior to the execution of the contract. O.C.G.A. § 36-91-40(a)(2).

c. Payment Bonds
    i. The payment bond shall be in the amount of at least the total amount payable by the terms of the initial contract for the use and protection of all subcontractors, and all persons supplying labor, materials, machinery, and equipment in the conduct of work provided in the contract. O.C.G.A. § 36-91-90. In lieu of a payment bond, the city may accept, in its discretion, a cashier's check, certified check, or cash in the amount of at least the total amount payable by the terms of the contract. O.C.G.A. § 36-91-90. No public works construction contract requiring a payment bond shall be valid for any purpose. O.C.G.A. § 36-91-91. The city must approve the form and solvency of the surety prior to the execution of the contract. O.C.G.A. § 36-91-40(a)(2).

III. NON-COLLUSION

Vendor(s), by submitting a proposal, certify that the accompanying proposal is not the result of, or affected, by any unlawful act of collusion with any other person or company engaged in the same line of business or commerce, or any other fraudulent act punishable under Georgia or United States law.

IV. PROPOSAL REJECTION

The City of Flowery Branch reserves the right to reject any or all proposals at any time without penalty. ***Any vendor, who acts as a supplier to another vendor submitting a proposals and also submits a proposal of their own, will be viewed as participating in Collusive behavior. This behavior displays a pattern or practice of unethical or immoral business practices. Any vendor associated with this practice may be banned from doing business with the City of Flowery Branch for up to three years.***

V. MODIFICATION OF PROPOSALS

Any clerical mistake that is patently obvious on the face of the proposal may, subject to the limitations described below, be corrected upon written request and verification submitted by the Proposer. A non-material omission in a proposal may be corrected if the Finance Department determines that correction to be in the City's best interest. Omissions affecting or relating to any of the following shall be deemed material and shall not be corrected after proposal opening:

(1) Price Information; and
(2) Any Required Insurance

VI. WITHDRAWAL OF PROPOSALS

Proposals may be withdrawn at any time prior to the proposal opening. After proposals have been opened, withdrawal of a proposal shall be based upon the following:
The Proposer shall give notice in writing of his claim of right to withdraw his proposal due to an error within two business days after the conclusion of the proposal opening procedure. Proposals may be withdrawn from consideration if the price is substantially lower than the other proposals due solely to a mistake therein, provided the proposal was submitted in good faith, and the mistake was a clerical mistake as opposed to a judgment mistake, and was actually due to an unintentional arithmetic error or an unintentional omission of a quantity of work, labor or material made directly in the compilation of the proposal, which unintentional arithmetical error or unintentional omission can be clearly shown by objective evidence drawn from inspection of original work papers, documents and materials used in the preparation of the proposal sought to be withdrawn. The Proposer's original work papers shall be the sole acceptable evidence of error and mistake if he elects to withdraw his proposal. If a proposal is withdrawn under the authority of this provision, the lowest remaining responsive proposal shall be deemed to be the low proposal.

VII. NON-ENDORSEMENT

As a result of the selection of a vendor to supply products and/or services to the City of Flowery Branch, the City of Flowery Branch is neither endorsing nor suggesting that the vendor's product is the best or only solution. The vendor agrees to make no reference to the City of Flowery Branch in any literature, promotional material, brochures, sales presentation, or the like without the express written consent of the City of Flowery Branch.

VIII. PROPRIETARY MATERIAL

Any information contained in the proposal that is proprietary will be neither accepted nor honored. All information contained in this proposal is subject to public disclosure.

IX. RESPONSE PROPERTY OF THE CITY OF FLOWERY BRANCH

All material submitted in response to this request becomes the property of the City of Flowery Branch. Selection or rejection of a response does not affect this right.

X. NO OBLIGATION TO BUY

The City of Flowery Branch reserves the right to refrain from contracting with or purchasing from any vendor. The release of this Proposal does not compel the City of Flowery Branch to purchase.

XI. COST OF PREPARING PROPOSALS

The City of Flowery Branch is not liable for any cost incurred by vendors in the preparation and presentation of proposals and demonstrations submitted in response to this proposal.

XII. NUMBER OF COPIES REQUIRED

Vendors are to submit (1) original bid and one (1) electronic copy on a flash drive.

XIII. ADDENDA

Proposers are responsible for checking the City of Flowery Branch's website for the issuance of any addenda prior to submitting a proposal. The address is **https://www.flowerybranchga.org/BIDs**

**The City of Flowery Branch is an equal opportunity owner/employer and will not discriminate against any vendor because of race, creed, color, religion, sex, national origin, or ADA disability status.

*** The City of Flowery Branch will comply with Title VI of the Civil Rights Act of 1964, 78 Stat. 252, 42 USC 2000d—42 USC 2000d—4 (hereinafter referred to as the Act), and all requirements imposed by or pursuant to Title 49, Code of Federal Regulations, Department of Transportation, Subtitle A, Office of the Secretary Part 21, Nondiscrimination in Federally Assisted Programs of the Department of Transportation—Effectuation of Title VI of the Civil Rights Act of 1964 (hereinafter referred to as the Regulations), and other pertinent directives, to the end that in accordance with the Act, Regulations, and other pertinent directives, no person in the United States shall, on the grounds of race, color, sex, or national origin be excluded from participation in, be denied the benefits of, or be otherwise subjected to discrimination under any program or activity for which the Recipient receives federal financial assistance from the Department of Transportation, including the Federal Highway Administration, and HEREBY GIVES ASSURANCE THAT it will promptly take any measures necessary to effectuate this agreement.

City of Flowery Branch
PROPOSAL CERTIFICATION
RFP No. 26-003 White Horse Creek Lift Station Rehabilitation

This form must be completed and signed for the proposal to be considered.

With my signature, I certify that I am authorized to commit my firm to the proposal and that the information herein is valid for 60 days from this date. I further certify that all information presented herein is accurate and complete and that the scope of work can be performed as presented in this proposal upon the City's request.

Postal Return and/or Courier Delivery Address:

City of Flowery Branch
Finance Department
5410 Pine Street Flowery Branch, GA 30542

PROPOSAL RESPONSE:

PRICE: $_____ **SEE PAGE 16**

Please attach specific pricing details that itemize costs by task, including contractor staff time and hourly rates, and other direct costs (materials, supplies, etc.). (In the event of discrepancies between the specific pricing details and this page, this page will be deemed to convey the contractor's accurate proposal.)

Having read and responded to all attached specifications, the undersigned offers the above quoted prices, terms, and conditions.

Signed, sealed, and delivered in the presence of:

_____ By: _____
Unofficial Witness (Person authorized to sign binding contract)

Title: _____

_____
Notary Public Attest: _____
Commission Expires: _____ (Officer of Company if Corporation)

Title: _____

Company Name: _____

CITY OF FLOWERY BRANCH

ADDENDUM ACKNOWLEDGEMENT

BID 26-003

WHITE HORSE CREEK LIFT STATION REHABILITAION

PLEASE LIST ISSUED ADDENDUM(S)

Addendum Number(s)

_____ _____

_____ _____

_____ _____

☐ **NO ADDENDA WERE RECEIVED**

COMPANY NAME: _____

CONTACT PERSON: _____

ADDRESS: _____

CITY:_____ **STATE:**_____ **ZIP:**_____

PHONE: FAX: _____

EMAIL ADDRESS: _____

By signing below, I hereby acknowledge receipt of the supplement pertaining to the above referenced bid.

SIGNATURE: _____**DATE:** _____

UPON RECEIPT, PLEASE PRINT AND ADD TO YOUR PROPOSAL.

AFFIX THIS LABEL IN A VISIBLE LOCATION ON SEALED PROPOSAL

RFP Title:	**RFP No. 26-003 White Horse Creek Lift Station Rehabilitation**
Company:	
Contact Person:	
Contact Phone:	
RFP Due Date:	Tuesday, January 13, 2026, at 2:00 P.M.

DELIVER ONLY TO:

City of Flowery Branch

Attn: Finance Department

5410 Pine Street

Flowery Branch, GA 30542

Internal Use Only:

Received:

THIS SEALED PROPOSAL WILL REMAIN CLOSED UNTIL THE ADVERTISED PROPOSAL OPEN DATE AND TIME BY THE FINANCE DEPARTMENT.

PROPOSAL INFORMATION SHEET

Company Name:		
Proposer Address:		
Proposer Contact:		
Proposer Telephone Number:		
Proposer Email Address:		
Addenda Acknowledgement *(Proposer shall insert number of each Addendum received):*	Addenda Numbers: _____ _____ _____	
Number of Years as a Supplier of a Pump of this Type:		
Pump Model:		
Equipment Price: *(Including manufacturing, materials, labor, delivery/freight, startup services, performance test, operator training, etc.)*		US Dollars
Submittal Lead Time from Purchase Order:		Days
Equipment Lead Time from Approved Submittal:		Days
Refunds/discounts to the City in the event the proposed lead times are exceeded		$/Day
Travel/site time included for manufacturer's representative services (such as pump startup):		Trips/days

EXHIBIT A

REFERENCE RFP #26-003

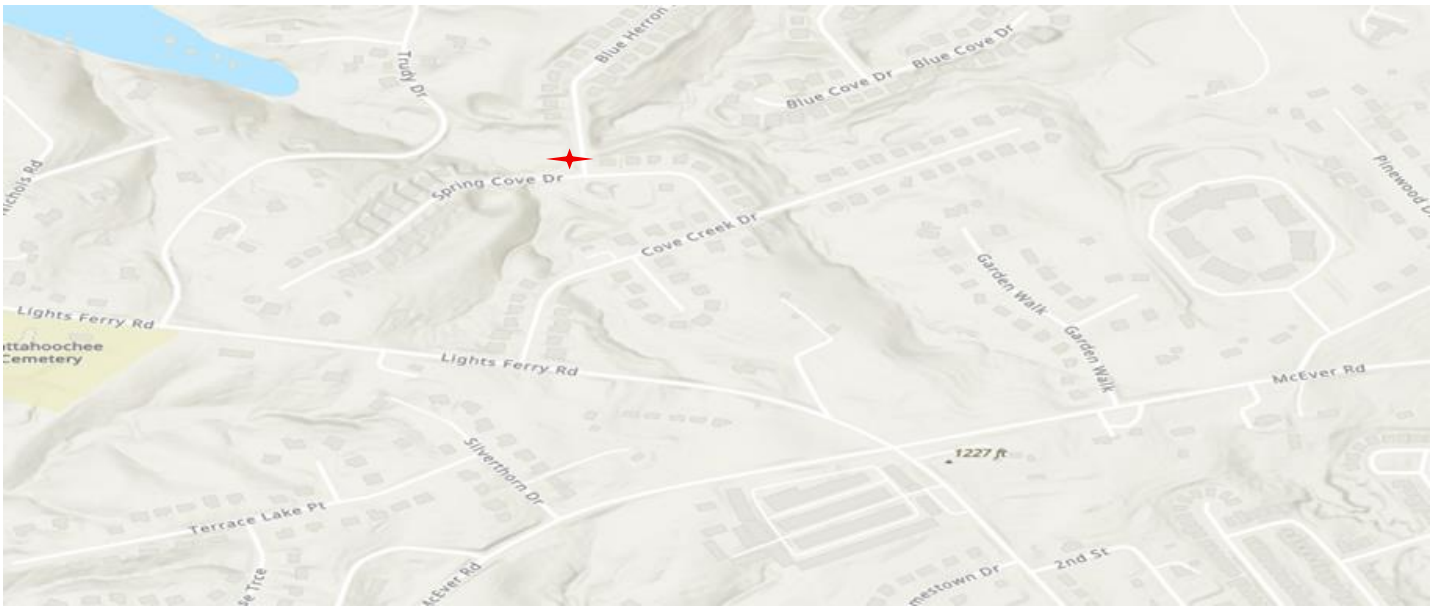

END EXHIBIT A.

AFFIX THIS LABEL IN A VISIBLE LOCATION ON SEALED PROPOSAL

RFP Title:	**RFP No. 26-003 White Horse Creek Lift Station Rehabilitation**
Company:	PRO PUMP SOLUTIONS OF AMERICA, LLC.
Contact Person:	MIKE VENTRY
Contact Phone:	706-633-4445
RFP Due Date:	Tuesday, January 13, 2026, at 2:00 P.M.

DELIVER ONLY TO:

City of Flowery Branch

Attn: Finance Department

5410 Pine Street

Flowery Branch, GA 30542

Internal Use Only:

Received:

THIS SEALED PROPOSAL WILL REMAIN CLOSED UNTIL THE ADVERTISED PROPOSAL OPEN DATE AND TIME BY THE FINANCE DEPARTMENT.

PROPOSAL INFORMATION SHEET

Company Name:	PRO PUMP SOLUTIONS OF AMERICA	
Proposer Address:	343 PHILLIPS DR. CLEVELAND, GA 30528	
Proposer Contact:	MIKE VENTRY	
Proposer Telephone Number:	706 633 4445	
Proposer Email Address:	MIKEV@PROPUMPSOLUTIONS.NET	
Addenda Acknowledgement *(Proposer shall insert number of each Addendum received):*	Addenda Numbers: ONE TWO	
Number of Years as a Supplier of a Pump of this Type:	8 YEARS	
Pump Model:	OC4X2-190/30P/C	
Equipment Price: *(Including manufacturing, materials, labor, delivery/freight, startup services, performance test, operator training, etc.)*		$64,505.80 US Dollars
Submittal Lead Time from Purchase Order:		5 Days
Equipment Lead Time from Approved Submittal:		56 Days
Refunds/discounts to the City in the event the proposed lead times are exceeded		$/Day
Travel/site time included for manufacturer's representative services (such as pump startup):		1/1 Trips/days

CITY OF FLOWERY BRANCH

ADDENDUM ACKNOWLEDGEMENT

BID 26-003

WHITE HORSE CREEK LIFT STATION REHABILITAION

PLEASE LIST ISSUED ADDENDUM(S)

Addendum Number(s)

ADDENDUM ONE

ADDENDUM TWO

☐ **NO ADDENDA WERE RECEIVED**

COMPANY NAME: PRO PUMP SOLUTIONS OF AMERICA, LLC.

CONTACT PERSON: MIKE VENTRY

ADDRESS: 343 PHILLIPS DR.

CITY: CLEVELAND **STATE:** GA **ZIP:** 30528

PHONE: ~~FAX:~~ 706-633 4445

EMAIL ADDRESS: MIKEV@PROPUMPSOLUTIONS.NET

By signing below, I hereby acknowledge receipt of the supplement pertaining to the above referenced bid.

SIGNATURE: [signature] **DATE:** 1/9/26

UPON RECEIPT, PLEASE PRINT AND ADD TO YOUR PROPOSAL.

City of Flowery Branch
PROPOSAL CERTIFICATION
RFP No. 26-003 White Horse Creek Lift Station Rehabilitation

This form must be completed and signed for the proposal to be considered.

With my signature, I certify that I am authorized to commit my firm to the proposal and that the information herein is valid for 60 days from this date. I further certify that all information presented herein is accurate and complete and that the scope of work can be performed as presented in this proposal upon the City's request.

Postal Return and/or Courier Delivery Address:

City of Flowery Branch
Finance Department
5410 Pine Street Flowery Branch, GA 30542

PROPOSAL RESPONSE:

PRICE: $ 64,505.80 **SEE PAGE 16**

Please attach specific pricing details that itemize costs by task, including contractor staff time and hourly rates, and other direct costs (materials, supplies, etc.). (In the event of discrepancies between the specific pricing details and this page, this page will be deemed to convey the contractor's accurate proposal.)

Having read and responded to all attached specifications, the undersigned offers the above quoted prices, terms, and conditions.

Signed, sealed, and delivered in the presence of:

Unofficial Witness

Maddison Hart
NOTARY
PUBLIC
White County, Georgia

Maddison Hart
Notary Public
Commission Expires: 7/15/28

By: _____
(Person authorized to sign binding contract)

Title: CFO

Attest: _____
(Officer of Company if Corporation)

Title: _____

Company Name: PRO PUMP SOLUTIONS OF AMERICA, LLC

Pro Pump Solutions of America, LLC

QUOTE

By: Mike Ventry
(706) 633-4445

Est # 2600017

TO: FLOWERY BRANCH, CITY OF
PO BOX 757
FLOWERY BRANCH, GA 30542
USA

Attn: Peter Woerner
E-Mail: peter.woerner@flowerybranchga.org
Phone: 706-982-0751

SHIP TO: FLOWERY BRANCH, CITY OF
6334 Spring Cove Drive
White Horse Creek LS Upgrades
FLOWERY BRANCH, GA 30542
USA

Attn: Peter Woerner

Quote No.	Date	Cust No	Your Referenced Inquiry	Delivery Promise	F.O.B.	Expiration
2600017	1/9/2026	000096		6 - 8 weeks, ARO		30 DAYS

Item	Quantity	UM	Part	Description	Price $	Extension $
001	2	EA	OC4X2-190/30PU	SS Handle, 50' power & sensor cable	26,326.42	52,652.84
002	2	EA	BPIUG-24-3R	GUIDE CLAW 4" Flange, Grommeted 4", 3" Guide Pipes	1,221.43	2,442.86
003	2	EA	A471	GROMMET 4"-BARNEYS	65.00	130.00
004	2	EA	PMR5	Relay, leakage HOMA	582.05	1,164.10
005	2	EA	ATS480D62Y	SqD soft Starter Replacement	2,933.00	5,866.00
007	1	HR	FIELD SERVICE	Start-up Soft Starters, PMR5 Sensor Relays,Tech & Truck, Start-up	1,750.00	1,750.00
800	1		FREIGHT	FREIGHT CHARGES	500.00	500.00

****TAXES MAY NOT BE INCLUDED IF APPLICABLE**

Total for Quote $ 64,505.80

Pro Pump Solutions of America, LLC. honors all standard manufacturer's warranty on parts. Please Note: the scope of work represents the complete description of all the work to be performed. Any additional service work required to complete the job and not covered in the scope of work, will be quoted and must be approved before completion.

TAXES, Pickup, Delivery, Desitination and/or Installation fee may not be covered in this estimate.

****Per above** you WILL be charged on your final invoice for any of the above if applicable. Non Negotiable**

Any equipment/pump(s) left over 90 days must be picked up if not in process of repairing.

THANK YOU FOR YOUR BUSINESS!

****Ending Invoice** Total Invoice will be due within 30 days of invoice date. All amounts remaining unpaid by the Client after the agreed terms date shall accrue interest at a rate of 4% per month. This interest shall continue to accrue every 30 days until the outstanding balance, including all accrued interest, is paid in full. If your entity holds any percentage, it has to be approved by PPS before check is mailed.**

LEGAL DISCLAIMER: This document is intended to be used by the business or entity named on the document. This document and the complete contents of such, are strictly confidential and privileged and propietary between Pro Pump Solutions, Inc. and the business, government agency, individual or association that it is issued to, on whole or part. It is strictly forbidden to copy, share, forward or make use any data that is found in this document. THANK YOU.

Technical Information

OC4X2-190/30P/C

HOMA PUMPEN MIT SYSTEM

Operating data	
Flow	175 US g.p.m.
Head	195 ft
Shaft power P2	19.3 hp
Pump efficiency	43.9 %
Required pump NPSH	
Pump type	Single pump
No. of pumps	1
Fluid	Water, clean

Pump	
Pump Code	OC4X2-190/30P/C
Impeller	Vane impeller with cutter sys.
Impeller size	190 mm
Solid size	
Discharge port	4" ANSI
Suction port	DN100

Motor	
Rated voltage	230/460 V
Frequency	60
Rated power P2	30.0 hp
Rated speed	3450 rpm
Number of poles	2
Efficiency	90 %
Rated current	70 / 35 A
Degree of protection	IP 68

Testnorm P2>10kW, HI Standard Grade 2B
P2<10kW, HI Standard Sect. 11.6.5.4

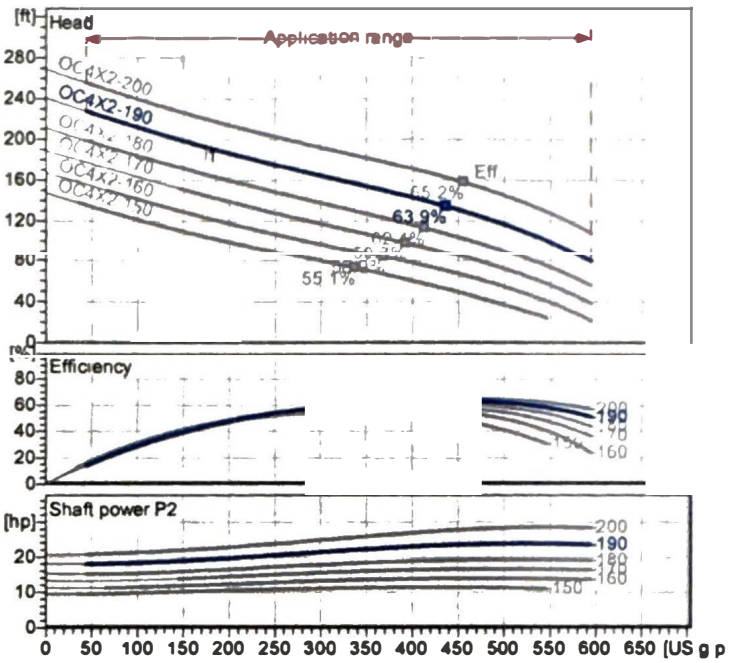

Wet well installation with coupling kit (P, 150...200)
Dimensions in mm [inch], letters see table

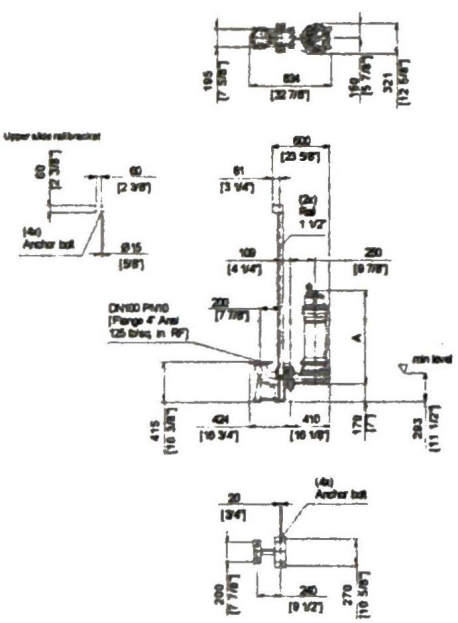

Materials	
Motor housing	Cast Iron ASTM A48,Cl.40B
Pump housing	Cast Iron ASTM A48,Cl.40B
Impeller	Hard cast iron ASTM A532 IIIA, 60HRC
Wear plate/suction	Hard cast iron ASTM A532 IIIA, 60HRC
Suction cover	Cast Iron ASTM A48,Cl.40B
Motor shaft	AISI 430 F Stainless Steel
Bolts	AISI 304 Stainless Steel
Elastomers	Nitrile Rubber

Mechanical seal on motor side	SiC / SiC
Mechanical seal on medium side	SiC / SiC
Lower Bearing	Two angular ball bearings
Upper Bearing	Deep Groove Ball Bearing

Table Dimensions (mm)

A	887

2.0.1 - 09.01.2024 (Build 147)

Project | Project no.: | Created by:

Page:	Date:
1	12/1/2025

Performance Curve

OC4X2-190/30P/C

HOMA PUMPEN MIT SYSTEM

Impeller

Impeller type:	Solid size Ø:	Max. Ø:	Min. Ø:	Sel. Ø:	
Vane impeller with cutter sys.		200 mm	150 mm	190 mm	

Operating data

Speed:	Frequency:	Duty point:	Shaft power P2:	Discharge port:
3450 rpm	**60 Hz**	**Q =175 US g.p.m. H =195 ft**	**19.3 hp**	**4" ANSI**

Power data referred to:
Water, clean [100%] ; 68°F; 62.322lb/ft³; 1.0818E-5ft²/s

Testnorm: **P2>10kW, HI Standard Grade 2B**
P2<10kW, HI Standard Sect. 11.6.5.4

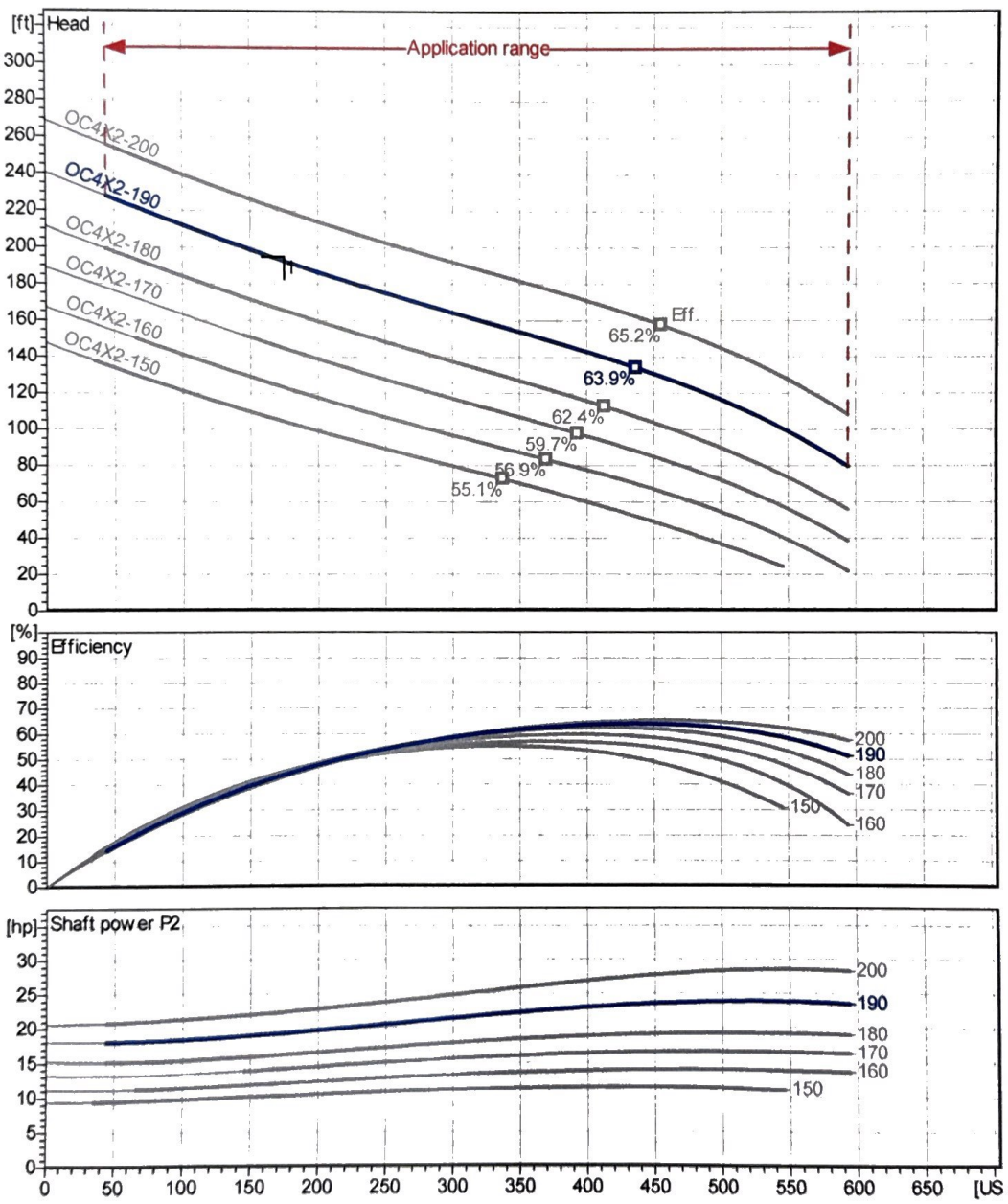

2.0.1 - 09.01.2024 (Build 147)

Project	Project no.:	Created by:	Page:	Date:
			2	12/1/2025

Dimensions

OC4X2-190/30P/C

Wet well installation with coupling kit (P. 150.. 200)
Dimensions in mm [inch], letters see table

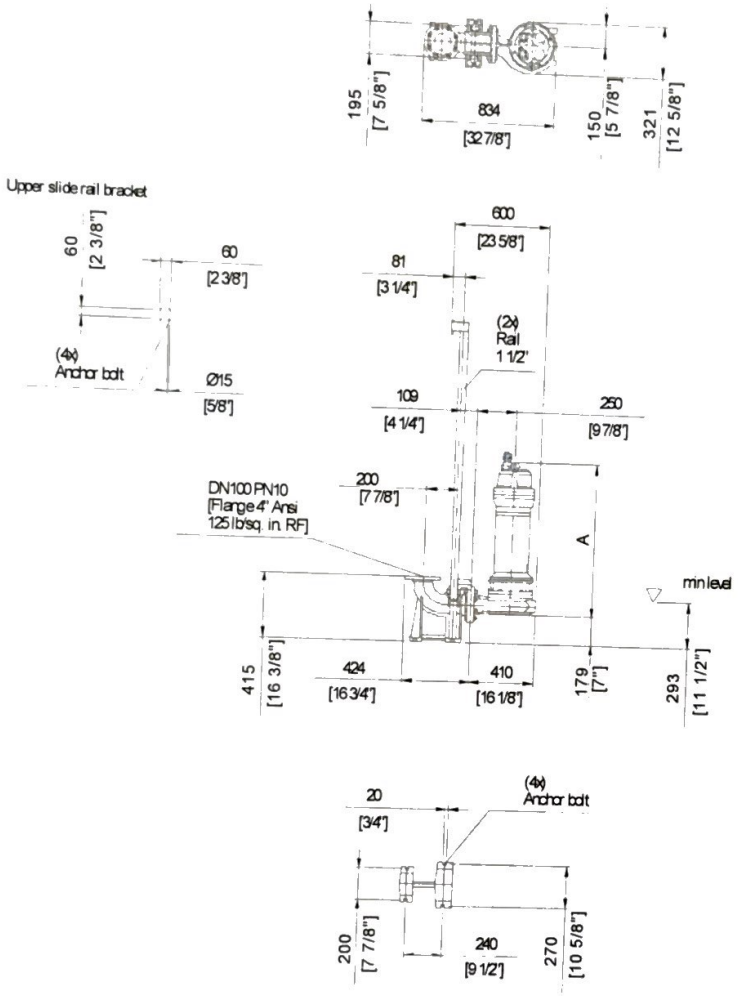

Table Dimensions (mm)

A	887

min level = Minimum fluid level for intermittent operation (S3)

2.0.1 - 09.01.2024 (Build 147)

Project	Project no.:	Created by:	Page: 3	Date: 12/1/2025

Technical Data

OC4X2-190/30P/C

HOMA PUMPEN MIT SYSTEM

Operating data					
Flow	**175 US g.p.m.**		**Head**	**195 ft**	**ft**
Shaft power P2	**19.3**	**hp**	**Static head**	**0**	**ft**
Pump efficiency	**43.9**	**%**	**Required pump NPSH**		**ft**
Pump type	Single pump		No. of pumps	1	
Fluid	Water, clean		Temperature	68	°F
Density	62.32	lb/ft³	Kin. viscosity	1.082E-5	ft²/s

Pump					
Pump Code	OC4X2-190/30P/C		Speed	3450	rpm
Suction port	DN100		Head Max.	227.8	ft
Discharge port	4" ANSI		Head Min.	79.7	ft
Impeller type	Vane impeller with cutter sys		Flow Max.	594.4	US g.p.m.
Solid size		mm	Pump efficiency max.	63.9	%
Impeller Ø	190	mm	Required rated power max. P2	23.9	hp

Motor					
Motor design	Submersible motor		Insulation class	H	
Motor name	AM204 34P/2/3		Degree of protection	IP 68	
Frequency	60	Hz	Temperature class	T3C	
Rated power P2	30.0	hp	NEMA code	J	
			Explosion protection		
Rated speed	3450	rpm	Efficiency at % rated power 100%	90.0	%
Rated voltage	230 / 460 V | 3~		Efficiency at % rated power 75%	90.0	%
Rated current	70.0 / 35	A	Efficiency at % rated power 50%	90.0	%
Starting current, direct starting	569.8 / 285	A	cos phi at % rated power 100%	0.89	
Starting current, star-delta	1(	A	cos phi at % rated power 75%	0.85	
Starting mode	Directly		cos phi at % rated power 50%	0.77	
Power cable	4AWG-4+14AWG-4		Control cable		
Type of power cable	RHW-2		Type of control cable		
Cable length	32.8 ft		Service factor	1.15	
Shaft seal	Mechanical seal on motor side		SiC / SiC		
	Mechanical seal on medium side		SiC / SiC		
Bearing	Lower Bearing		Two angular ball bearings		
	Upper Bearing		Deep Groove Ball Bearing		
Remarks					

Materials / Weight			
Motor housing	Cast Iron ASTM A48;Cl.40B	Motor shaft	AISI 430 F Stainless Steel
Pump housing	Cast Iron ASTM A48;Cl.40B	Bolts	AISI 304 Stainless Steel
Impeller	Hard cast iron ASTM A532 III A, 60HRC	Elastomers	Nitrile Rubber
Wear plate with cutter	Hard cast iron ASTM A532 III A, 60HRC		
Suction cover	Cast Iron ASTM A48;Cl.40B		
Weight aggregate	436.51 lb		

2.0.1 - 09.01.2024 (Build 147)

Project	Project no.:	Created by:	Page:	Date:
			4	12/1/2025

HOMA®
PUMP TECHNOLOGY

Warranty

FIVE YEAR PRO-RATED MUNICIPAL PUMP WARRANTY
A Series PUMPS STANDARD & EXPLOSION PROOF
PERMANENT TYPE INSTALLATION*

Homa Pump Technology warrants the above referenced pumps ("Products") to be free from defects in workmanship and materials as follows:

If used in a permanent municipal application, the warranty period shall expire five (5) years from date of initial installation. If start up does not occur within six (6) months after date of shipment from Manufacturer, the warranty period shall expire five (5) years after the date of shipment from Manufacturer. This warranty is contingent upon purchaser's or end user's payment of the applicable percentage of the list price (list price minus covered %) of the following parts in effect at time of replacement.

WARRANTY COVERAGE

	Months 0-18	Months 19-31	Months 32-45	Months 46-60
Percentage	100%	75%	50%	25%

*If used in any non-municipal application, the warranty period shall expire on the earliest of the below dates:

i) one (1) year from date of installation of the Products; or

ii) eighteen (18) months from date of shipment of the Products from Manufacturer.

Products or parts thereof that are replaced or repaired under warranty during the original warranty period, shall be covered under this warranty until the expiration of the original warranty period or ninety (90) days from the date of such replacement or repair, whichever is later. In any event, such extended warranty period shall not exceed ninety (90) days after the expiration of the original warranty period.

The warranties stated above are contingent upon start-up of the equipment on site by an authorized Manufacturer's representative, as verified by receipt of start-up reports completed and signed by an authorized Manufacturer's representative. (For all "P" and larger Motors the report must be on file at Homa PTI).

If during the warranty period, any Products fail to meet the requirements set out in this warranty, the purchaser or end user shall give written notification to Manufacturer stating the reasons therefor. Upon receipt of prior written authorization from Manufacturer, Products shall be transported to Manufacturer's authorized service center, prepaid, at purchaser or end-user's cost. Manufacturer's sole obligation shall be to repair, modify or replace Products or parts thereof, at Manufacturer's sole option. Products repaired under this warranty will be returned with freight prepaid. Products must be repaired by an authorized Manufacturer repair center for warranty coverage to be considered. All warranty repairs will be done with OEM parts, use of Non-OEM parts is not authorized.

All protection features (such as moisture sensors, bearing monitors, and thermal overloads) incorporated in the Products must be connected and operable for warranty coverage. Proof of monitoring must be provided upon request.

This warranty shall not apply to any Products or parts thereof which have been (i) subjected to misuse, misapplication, accident, alteration, neglect, failure to act in a timely manner to address alarms/warnings, or physical damage; (ii) installed, operated, and/or maintained in a manner which is contrary to Manufacturer's written instructions as it pertains to installation, operation and maintenance of the Products, including but without limitation to being operated without being connected to monitoring devices supplied with specific products for protection; (iii) used in an application or for pumping liquids other than the use for which it is intended as specified in Manufacturer's product literature; (iv) damaged due to a defective power supply, improper electrical protection, faulty repair, ordinary wear and tear, corrosion, erosion or chemical attack, an act of God, an act of war or by an act of terrorism, (v) damaged resulting from the use of accessory equipment not sold by Manufacturer or not approved by Manufacturer for use in connection with Manufacturer's products, or (vi) repaired or altered without Manufacturer's written consent.

This warranty does not cover costs for standard and/or scheduled maintenance that is performed, nor does it cover Manufacturer's parts that, by virtue of their operation, require replacement through normal wear (aka Wear Parts), unless a defect in material or workmanship is determined by Manufacturer. Wear Parts are defined as cutters, cutting plates, impellers, diffusers, wear rings (stationary or rotating), volutes (when used in an abrasive environment), oil, grease, cooling fluids and/or any items deemed necessary to perform and meet the requirements of normal maintenance on all Manufacturer equipment.

Manufacturer shall not be liable for any special, indirect, consequential, or punitive damages, or profit loss of any kind. Major components not manufactured by the Manufacturer are covered by the original manufacturer's warranty in lieu of this warranty. In addition to any other special, indirect or consequential damages referenced above, Manufacturer shall not be responsible for travel expenses, rented (replacement) equipment, pump removal fees, installation fees, outside contractor's fees, or unauthorized repair shop expenses.

This warranty shall extend only to the initial end user.

ALL OTHER WARRANTIES, CONDITIONS AND REPRESENTATIONS, EXPRESSED OR IMPLIED BY STATUTE, COMMON LAW OR OTHERWISE, IN RELATION TO THE SUPPLY OF THE PRODUCTS INCLUDING BUT NOT LIMITED TO THE IMPLIED WARRANTIES OF MERCHANTABILITY AND FITNESS FOR A PARTICULAR PURPOSE ARE EXCLUDED TO THE EXTENT PERMITTED BY LAW.

*This warranty is applicable to Products supplied by Homa Pump Technology, unless specifically indicated otherwise in writing by Manufacturer.

Rev 9/24/2020

Pro Pump Solutions of America, LLC

343 PHILLIPS DRIVE
CLEVELAND, GA. 30528
678-454-1030

HOMA Pump Station References

City of Calhoun
17 – 18 Lift Stations (multiple size HOMA units)
Contact: Mark Burchett mburchett@calnet-ga.net
706-280-1623

City of Jasper
6 – 7 Lift Stations (multiple size HOMA units)
Contact: Charles Jones cjones@jasper-ga.us
770-893-7749

City of Chatsworth
5 – 6 Lift Stations (Converted Flygt to HOMA)
Contact: Kenny Loggins kennyl@chatsworthwater.com
706-671-0301

White Horse Creek Lift Station Rehabilitation Evaluation Form

Respondent (Company Name): Cornerstone H20

A. Non-Price Factors — 40 Points Total

#	Criterion	Max Points	Score	Comment
1	Expected performance based on pump HP and efficiency at design point	4	1	20% Efficiency
2	Ability to accommodate future design points with alternate impellers	4	4	Flow at 175 gpm
3	Expected reliability based on manufacturer experience and references	4	4	
4	Quality of materials of construction	4	4	
5	Proposed equipment delivery / lead times	4	3	1 week submittal, 5-7 weeks equipment
6	Proposed equipment layout	4	4	
7	Expected maintenance requirements	4	4	
8	Quality of manufacturer's warranty	4	4	
9	Terms and conditions of the manufacturer's purchase agreement	4	4	
10	Proposal responsiveness – completeness, organization and clarity	4	4	

Subtotal – Non-Price Factors (40 max): 36

White Horse Creek Lift Station Rehabilitation Evaluation Form

B. Price Factors — 60 Points Total

#	Criterion	Max Points	Score	Comment
1	Total equipment cost	30	5	$112,000
2	Suitability for existing site (preference will be given to proposals requiring minimal demolition/modification)	30	30	

Subtotal – Price Factors (60 max): 35

Total Score (100 max): 71

General Engineer Comments

1. $112k*, ~175 gpm, ~20% eff
Though price isn't everything, I don't see much to justify the very high price of the Ebara/Cornerstone.

2. The fee submitted by Cornerstone is high, but I remember the Ebara pumps being very good. The pumps seem to be designed to handle a much larger flow.

Max Points	*Proposed Fee*
30	*1 - 20K*
25	*20,001 - 40k*
20	*40,001 - 60k*
15	*60,001 - 80k*
10	*80,001 - 100k*
5	*100,001 - 120k*

The price-scoring tiers are based on the project's approved budget. The structure prioritizes proposals within the budget and provides a clear, consistent, and transparent method for evaluating cost.

EBARA

Customer	: CORNERSTONE H20
Reference	: White Horse Creek LS Rehab

Cornerstone
$112,000.00
20% Eff.

Pump Performance Curve
Ebara Quotation System 25.5.0

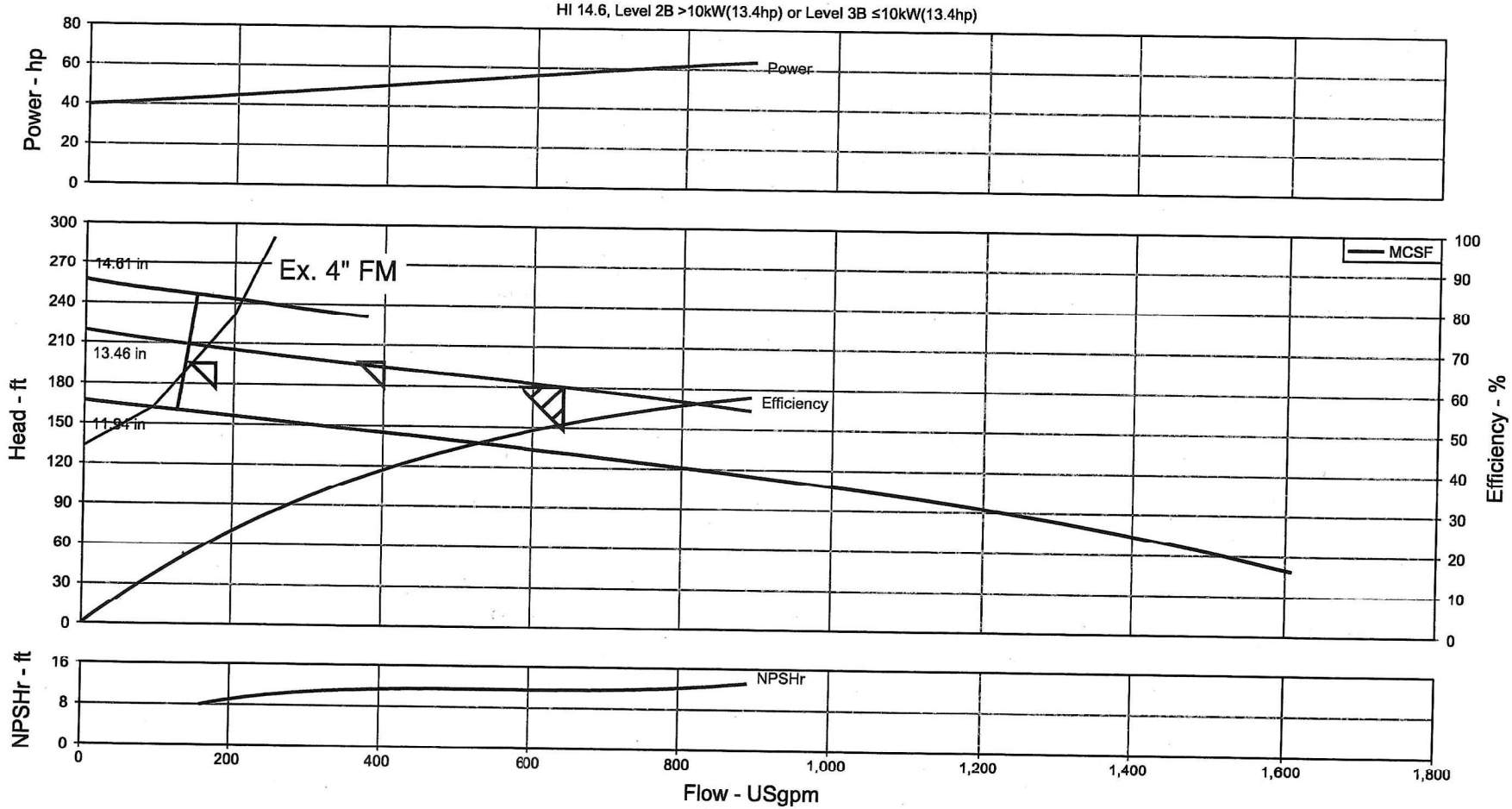

Item number	: 100DKEU
Service	:
Quantity	: 1
Quote number	: 121204-crw - White Horse Creek LS
Date last saved	: 04 Dec 2025 7:34 AM

Product Description	: 100DKEU4645
Stages	: 1
Speed, rated	: 1780 rpm
Based on curve number	: 100DKEXU4645
Efficiency	: 50.77 %
Power, rated	: 57.36 hp

Flow, rated	: 640.0 USgpm
Differential head / pressure, rated	: 180.0 ft
NPSH required	: 11.49 ft
Fluid density, rated / max	: 1.000 / 1.000 SG
Viscosity	: 1.12 cP
Cq/Ch/Ce/Cn [ANSI/HI 9.6.7-2010]	: 1.00 / 1.00 / 1.00 / 1.00

Cornerstone (Ebara):
- $112,000
- 20% Eff.

Ebara Pumps Americas Corporation
1651 Cedar Line Dr, Rock Hill, South Carolina 29730 USA
Tel: (803) 327-5005 Fax: (803) 327-5097 www.pumpsebara.com

White Horse Creek Lift Station Rehabilitation Evaluation Form

Respondent (Company Name): Goforth Williamson Inc. (GWI)

A. Non-Price Factors — 40 Points Total

#	Criterion	Max Points	Score	Comment
1	Expected performance based on pump HP and efficiency at design point	4	1	**29% Efficiency**
2	Ability to accommodate future design points with alternate impellers	4	3	**175 gpm needed only 160 presented**
3	Expected reliability based on manufacturer experience and references	4	4	
4	Quality of materials of construction	4	4	
5	Proposed equipment delivery / lead times	4	4	**5 days Submittal 5-25 working days if not instock**
6	Proposed equipment layout	4	4	
7	Expected maintenance requirements	4	4	
8	Quality of manufacturer's warranty	4	4	
9	Terms and conditions of the manufacturer's purchase agreement	4	4	
10	Proposal responsiveness – completeness, organization and clarity	4	4	

Subtotal – Non-Price Factors (40 max): 36

White Horse Creek Lift Station Rehabilitation Evaluation Form

B. Price Factors — 60 Points Total

#	Criterion	Max Points	Score	Comment
1	Total equipment cost	30	20	$47,045
2	Suitability for existing site (preference will be given to proposals requiring minimal demolition/modification)	30	25	Good quality soft starters were presented but seemed to be different brand than current soft starters that could require additional control panel modifications.

Subtotal – Price Factors (60 max): 45

Total Score (100 max): 81

General Engineer Comments

1. $47k*, ~160 gpm, ~29% eff

2. Obviously the Goforth submittal was well put together and the cheapest. At first glance, it appears that the other pumps are more efficient, however, it seems like it may be better suited for our design point. Impeller is good for large solids and debris, but is probably the reason it is a little more inefficient.

Max Points	*Proposed Fee*
30	*1 - 20K*
25	*20,001 - 40k*
20	*40,001 - 60k*
15	*60,001 - 80k*
10	*80,001 - 100k*
5	*100,001 - 120k*

The price-scoring tiers are based on the project's approved budget. The structure prioritizes proposals within the budget and provides a clear, consistent, and transparent method for evaluating cost.

GWI (Grundfos) -$47,045.00

29% Eff.

Grundfos

Submittal Data

PROJECT:	UNIT TAG:	QUANTITY:
REPRESENTATIVE:	TYPE OF SERVICE:	
ENGINEER:	SUBMITTED BY:	DATE:
CONTRACTOR:	APPROVED BY:	DATE:
	ORDER NO.:	DATE:

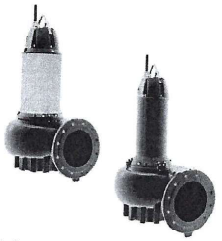

Note! Product picture may differ from actual product

SEV.30.A30.335.2.52H.EX.61R.A

Submersible and dry-installed Grundfos SE/SL sewage pumps (9-30 kW) are fitted with either S-tube® (SE/SE1/SE2 and SL/SL1/SL2) or SuperVortex impeller (SLV). The free passage through the pump varies from 35-125 mm depending on size and hydraulic variant.

33.5 HP

Conditions of Service	
Flow:	178 US GPM
Head:	201.6 ft
Efficiency:	29.8 %
Temperature:	68 °F
NPSH required:	13.89 ft
Specific Gravity:	1.000

Pump Data	
Liquid temperature range:	50 .. 104 °F
Maximum ambient temperature:	104 °F
Flange standard:	ANSI
Product number:	99790990

Motor Data	
Mains frequency:	60 Hz
Enclosure class:	IP68
Motor protection:	KLIXON
Eta 1/1:	89 %

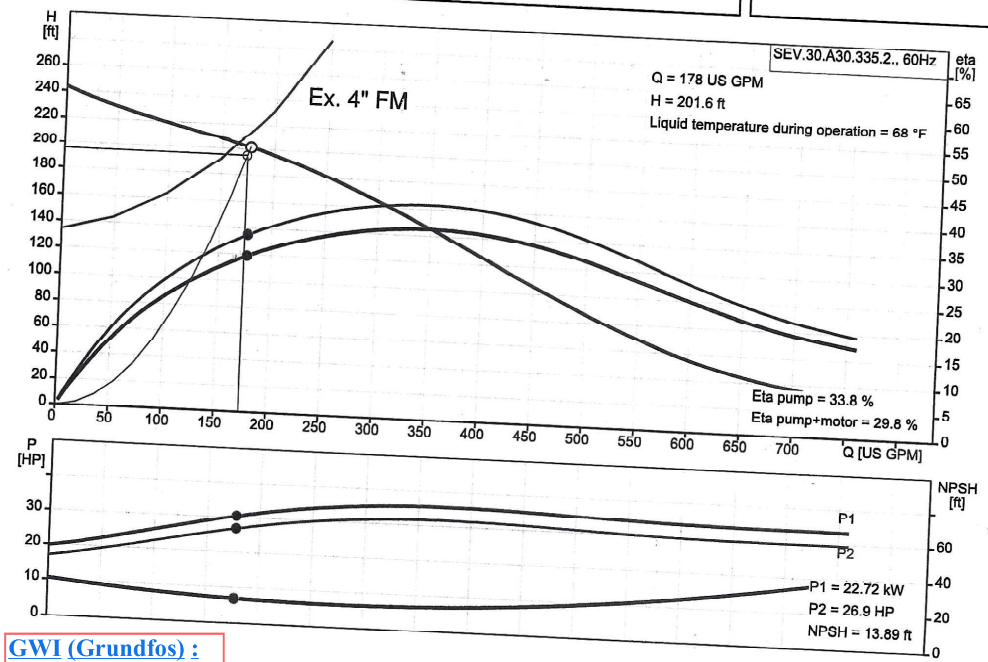

GWI (Grundfos) :
- $47,045.00
- 29% Eff.
- 33.5 HP

1

White Horse Creek Lift Station Rehabilitation Evaluation Form

Respondent (Company Name): Pro Pump Solutions of America, LLC

A. Non-Price Factors — 40 Points Total

#	Criterion	Max Points	Score	Comment
1	Expected performance based on pump HP and efficiency at design point	4	4	46% Efficiency
2	Ability to accommodate future design points with alternate impellers	4	4	Flow At 175 gpm
3	Expected reliability based on manufacturer experience and references	4	4	
4	Quality of materials of construction	4	4	
5	Proposed equipment delivery / lead times	4	3	5 days Submittal, 56 days equipment
6	Proposed equipment layout	4	4	
7	Expected maintenance requirements	4	4	
8	Quality of manufacturer's warranty	4	4	
9	Terms and conditions of the manufacturer's purchase agreement	4	4	
10	Proposal responsiveness – completeness, organization and clarity	4	2	Submittal was organized but poorly assembled.

Subtotal – Non-Price Factors (40 max): 37

White Horse Creek Lift Station Rehabilitation Evaluation Form

B. Price Factors — 60 Points Total

#	Criterion	Max Points	Score	Comment
1	Total equipment cost	30	15	$64,505.80
2	Suitability for existing site (preference will be given to proposals requiring minimal demolition/modification)	30	30	

Subtotal – Price Factors (60 max): 45

Total Score (100 max): 82

General Engineer Comments

1. $64.5k*, 175 gpm, ~46% eff - Comparing the efficiencies of the three, the Homa appears to be the most efficient.

2. Pro Solutions submittal was not put together very well at all. Some of the info on the pump curves are hard to read. Price is in the middle of the road but may be the best pump for the job. I don't know anything about HOMA Pumps though. Impeller is best if there has been a lot of clogging or is a high amount of debris in the effluent, especially rags, etc.

Max Points	*Proposed Fee*
30	*1 - 20K*
25	*20,001 - 40k*
20	*40,001 - 60k*
15	*60,001 - 80k*
10	*80,001 - 100k*
5	*100,001 - 120k*

The price-scoring tiers are based on the project's approved budget. The structure prioritizes proposals within the budget and provides a clear, consistent, and transparent method for evaluating cost.

Performance Curve

OC4X2-190/30P/C

★ Pro Pump - $64,505.80

40% Eff

HOMA PUMPEN MIT SYSTEM

Pro Pump (HOMA):
- $64,505.80
- 40% Eff.
- "30 HP" pump

Impeller

Impeller type	Solid size Ø:	Max. Ø:	Min. Ø:	Sel. Ø:
Vane impeller with cutter sys.		200 mm	150 mm	190 mm

Operating data

Speed	Frequency	Duty point	Shaft power P2:	Discharge port:
3450 rpm	60 Hz	Q =175 US g.p.m. H =195 ft	19.3 hp	4" ANSI

Power data referred to:
Water, clean [100%] ; 68°F, 62.322lb/ft³, 1.0818E-5ft²/s

"30 HP" pump

Testnorm: P2>10kW, HI Standard Grade 2B
P2<10kW, HI Standard Sect. 11.6.5.4

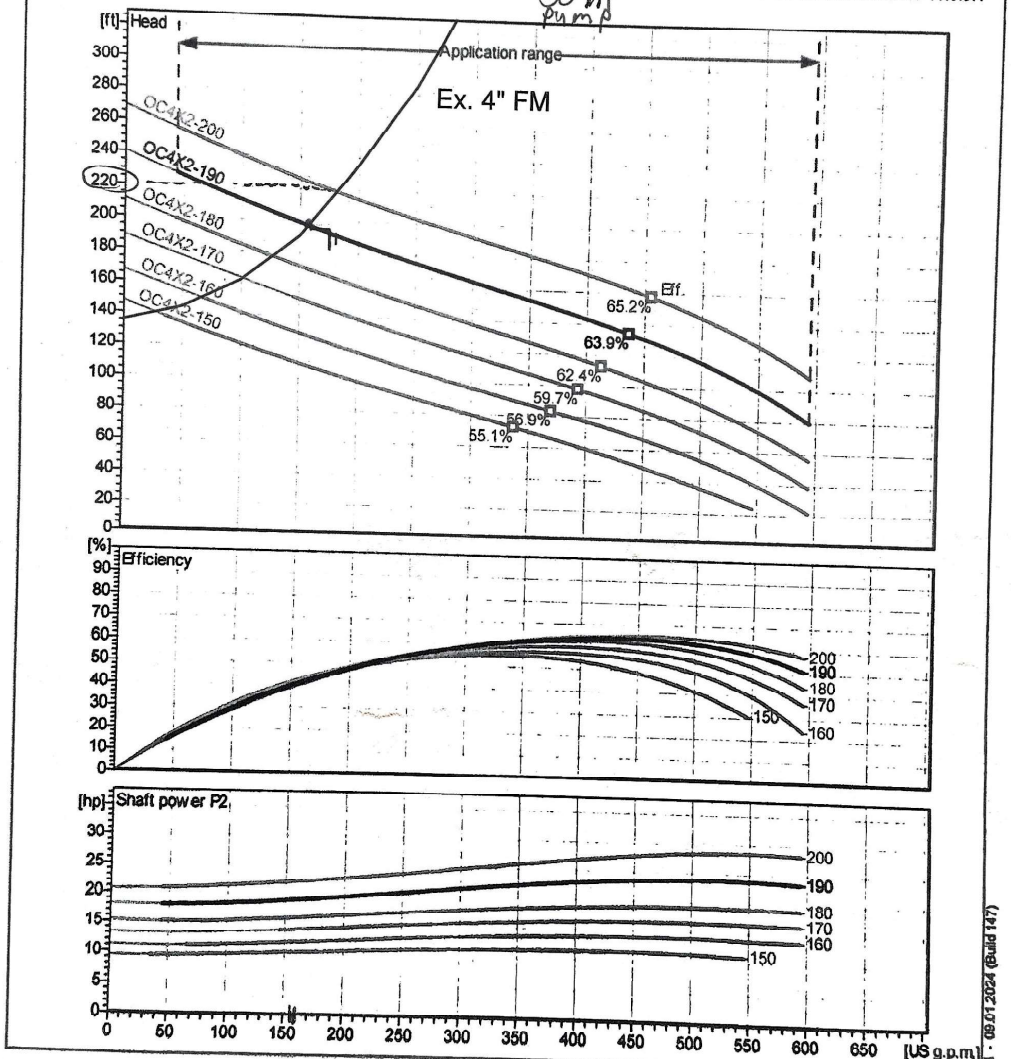

2.0.1 - 09.01.2024 (Build 147)

Project	Project no.:	Created by:	Page:	Date:
			2	12/1/2025

CITY OF FLOWERY BRANCH CITY COUNCIL

EXECUTIVE SUMMARY

SUBJECT: Consideration of executing the construction contract with Sol Construction, LLC for the Groundwater Wells #4 & #5 Reactivation Project, in the total contract amount of $3,324,130.00, to be funded through a combination of a GEFA loan and Water and Sewer Fund reserves to supplement the City's drinking water supply.

DATE: **April 16, 2026**

COUNCIL ACTION REQUESTED ON: **April 16, 2026**

BUDGET INFORMATION:
The project will be funded through a GEFA loan ($1,773,855) and Water and Sewer Fund reserves ($1,550,275) for a total project cost of $3,324,130.00.

PURPOSE:
To authorize execution of the construction contract for the Groundwater Wells #4 & #5 Reactivation Project.

HISTORY:
The City owns two inactive groundwater wells (Wells #4 & #5) located on City-owned property at the corner of Atlanta Highway and Vireo Drive, which were acquired from the State of Georgia for the purpose of reactivating them to supplement the City's drinking water supply. The City engaged ESG Engineering, Inc. to design and permit the work necessary to reactivate the wells and integrate them into the City's water system. Bids were publicly advertised and opened on January 29, 2026, at which time Sol Construction, LLC was identified as the lowest responsive and responsible bidder. On February 19, 2026, City Council formally recognized Sol Construction, LLC as the lowest responsive, responsible bidder. Since that time, the construction contract documents have been finalized and compiled into the Conformed Set, which is now presented for Council's consideration.

FACTS & ISSUES:

- The construction contract and related documents have been finalized by ESG Engineering and Sol Construction, LLC.

- The Conformed Set reflects the bid amount previously recognized by Council and incorporates all applicable plans, specifications, and contractual requirements.
- Execution of the contract will allow issuance of the Notice to Proceed and commencement of construction.

OPTIONS:

1. Authorize execution of the construction contract with Sol Construction, LLC for the Groundwater Wells #4 & #5 Reactivation Project.
2. Do not authorize execution of the construction contract.

RECOMMENDED SAMPLE MOTION:
I move to authorize the Mayor to execute the construction contract with Sol Construction, LLC for the Groundwater Wells #4 & #5 Reactivation Project in the amount of $3,324,130.00, funded through a GEFA loan and Water and Sewer Fund reserves.

DEPARTMENT: Administration
PREPARED BY: Tonya Parrish, City Manager

ESG ENGINEERING

ESG Engineering
6400 Peake Rd
Macon, GA 31210
(P) 478-474-5025
www.esgengineering.com

GROUNDWATER WELLS #4 & #5

PREPARED FOR

EST 1874
FLOWERY BRANCH
Always Blooming!

THE CITY OF
FLOWERY BRANCH, GEORGIA

CONTRACT DOCUMENTS & TECHNICAL SPECIFICATIONS

GEORGIA REGISTERED No. PE046341 PROFESSIONAL ENGINEER ANDREW D SWICEGOOD

CONTRACT DOCUMENTS

AND

TECHNICAL SPECIFICATIONS

Groundwater Wells #4 & #5

FOR THE

CITY OF FLOWERY BRANCH

HALL COUNTY

ESG Engineering, LLC
6400 Peake Road
Macon, Georgia 31210

TABLE OF CONTENTS

CONTRACT DOCUMENTS

Advertisement for Bids	00100
Instructions to Bidders	00200
Immigration and Security Form	00210
Bid Form	00410
Bid Bond	00460
Qualifications of Bidders	00470
Certification of Nonsegregated Facilities	00480
Non-collusion Affidavit of Prime Bidder	00481
Agreement	00500
Performance Bond	00610
Payment Bond	00615
Notice of Award	00621
Notice to Proceed	00622
General Conditions	00700
Supplementary Conditions	00800
GEFA Supplemental Conditions	GEFA

TECHNICAL SPECIFICATIONS

Allowances	01020
Measurement and Payment	01025
Submittals	01300
Testing Services	01410
Temporary Sanitary Facilities	01516
Contract Closeout Procedures	01701
Periodic and Final Clean-Up	01710
Warranties and Bonds	01740
Earthwork and Site Grading	02200
Demolition	02220
Excavation, Trenching, and Backfill	02315
Rock Removal	02316
Soil Erosion Control	02370
Valve Box Adjustment	02512
Chemical Feed Building	02513
Well House Enclosures	02514
Sanitary Sewer Collection System	02530
Utility Directional Drilling	02540
Aggregate Base Course	02720
Asphalt Concrete	02740
Sidewalks, Driveways, and Curbs & Gutters	02775
Permanent Grassing	02920
Concrete Formwork	03100
Concrete Accessories	03150
Concrete Reinforcement	03200
Cast-in-Place Concrete	03300
Precast Structures	03480

Water Distribution System	11200
Valves and Appurtenances	15200
Chemical Feed System	70001
Well Rehabilitation	80001
Covered Steel Structure	90001
Submersible Well Pumps	432133
Geotechnical Engineering Report	Appendix A

CONTRACT DOCUMENTS

SECTION 00200
INSTRUCTIONS TO BIDDERS

INTENTION: It is intended that the Instructions to Bidders, General Conditions, Supplementary Conditions, Technical Specifications and Construction Drawings shall cover the complete work to which they relate.

ARTICLE 1 DEFINED TERMS: In addition to the terms defined in the General Conditions, (EJCDC 1910-8) (1996), additional terms used in these Instructions to Bidders have the meanings indicated below which are applicable to both the singular and plural thereof.

1.1 **Bidder** – One who submits a Bid directly to Owner as distinct from a sub-bidder, who submits a bid to a Bidder.

1.2 **Successful Bidder** – The lowest, responsible and responsive Bidder to whom Owner (on the basis of Owner's evaluation as hereinafter provided) makes an award.

1.3 **Bid** – A complete and properly signed offer to execute work for the prices stipulated in Bid Form and submitted in accordance with the Bidding Documents.

1.4 **Addenda** – Graphic or written documents issued by Engineer prior to the opening of Bids issued to clarify, revise, add to, or delete information in the original bidding documents or in previous addenda.

ARTICLE 2 BID FORM: All bids must be made upon the Bid Forms hereto annexed, and shall state the amount bid for each item shown, and all bids must be for materials and work called for in the specifications. **Deposits for plans and specifications are not refundable**.

2.1 The Bid Form is included with the Bidding Documents; additional copies may be obtained from Engineer.

2.2 All blanks on the Bid Form must be completed by printing in black ink or by typewriter.

2.3 Bids by corporations must be executed in the corporate name by the president or a vice-president (or other corporate officer accompanied by evidence of authority to sign) and the corporate seal must be affixed and attested by the secretary or an assistant secretary. The corporate address and state of incorporation must be shown below the signature.

2.4 All names must be typed or printed in black ink below the signature.

2.5 The Bid shall contain an acknowledgement of receipt of all Addenda (the numbers of which must be filled in on the Bid Form).

2.6 The address and telephone number for communications regarding the Bid must be shown.

ARTICLE 3 QUALIFICATIONS OF BIDDERS:

3.1 To demonstrate qualifications to perform the Work, each Bidder must submit within five (5) days after Bid opening upon Owner's request detailed written evidence such as financial data, previous experience, present commitments, and other such data as may be necessary to assist Owner in determining Contractor's qualifications.

3.2 Each Bid must contain evidence of Contractor's authority to conduct business in the state where the Work is to be performed. State Contractor license number, if applicable, must also be shown on the Bid Form.

ARTICLE 4 COPIES OF BIDDING DOCUMENTS:

4.1 Complete sets of Bidding Documents must be used in preparing Bids; neither Owner nor Engineer assumes any responsibility for errors or misinterpretations resulting from the use of incomplete sets of Bidding Documents.

4.2 Owner and Engineer in making copies of Bidding Documents available for a non-refundable deposit do so only for the purpose of obtaining Bids for the Work and do not confer a license or grant for any other use.

ARTICLE 5 EXAMINATION OF BIDDING DOCUMENTS, OTHER DATA, AND SITE:

5.1 It is the responsibility of each Bidder before submitting a bid:

5.1.1 To examine and study thoroughly the Bidding Documents and other related data identified in the Bidding Documents;

5.1.2 To visit the work site to ascertain by inspection pertinent location conditions such as location, character and accessibility of the site including existing surface and subsurface conditions in the work area; availability of facilities, location and character of existing work within or adjacent thereto, labor conditions, etc.

5.1.3 To become familiar with and satisfy Bidder as to all federal,

state, and local Laws and Regulations that may affect cost, progress, or performance of the Work;

5.1.4 To obtain and carefully study (or assume responsibility for doing so) all addition or supplementary examination investigations, explorations, tests, studies, and data concerning conditions (surface, subsurface, and underground facilities) at or contiguous to the Site which may affect cost, progress, or performance of the Work or which relate any aspect of the means, methods, techniques, sequences, and procedures of construction expressly required of the bidding documents, and safety precautions and programs incident thereto;

5.1.5 To study and carefully correlate Bidder's knowledge and observations with the Bidding Documents and such other related data; and

5.1.6 To promptly notify Engineer of all conflicts, errors, ambiguities or discrepancies which Bidder has discovered in or between the Biding Documents and such other related documents;

5.1.7 To agree at the time of submitting its Bid that no further examinations, investigations, explorations, tests, studies or data are necessary for the determination of its Bid for performance of the work at the price bid and within the times and in accordance with the other terms and conditions of the Bidding Documents;

5.1.8 To become aware of the general nature of the work to be performed by Owner and others at the Site that relates to the Work as indicated in the Bidding Documents;

5.1.9 To determine that the Bidding Documents are generally sufficient to indicate and convey understanding of all terms and conditions for the performance of the Work.

5.2 The Owner shall make available to all prospective bidders, previous to receipt of bids, information that it may have as to sub-soil conditions and surface topography at the work site. Such information shall be given as the best factual information available without being considered as a representation of the Owner.

5.3 The submission of a Bid will constitute an incontrovertible representation by

Bidder that Bidder has complied with every requirement of this Article 5, that without exception, the Bid is premised upon performing and furnishing the Work required by the Bidding Documents and applying any specific means, methods, techniques, sequences, and procedures of construction that may be shown or indicated or expressly required by the Bidding Documents, that Bidder has given Engineer written notice of all conflicts, errors, ambiguities, and discrepancies that Bidder has discovered in the Bidding Documents and the written resolutions thereof by Engineer are acceptable to Bidder, and that the Bidding Documents are generally sufficient to indicate and convey understanding of all terms and conditions for performing and furnishing the Work.

ARTICLE 6 PRE-BID CONFERENCE:

6.1 If owner elects to conduct a pre-bid conference, all plan holders will be notified via addendum.

ARTICLE 7 INTERPRETATIONS AND ADDENDA:

7.1 All questions about the meaning or intent of the Bidding Documents are to be directed to Engineer. The person submitting the request shall do so in writing and be responsible for its prompt delivery. Interpretations or clarifications considered necessary by Engineer in response to such questions will be issued by Addenda mailed or delivered to all parties recorded by Engineer as having received the bidding Documents. Questions received less than ten days prior to the date for opening of Bids may not be answered. Only questions answered by formal written Addenda will be binding. Oral and other interpretations or clarifications will be without legal effect.

7.2 Addenda may also be issued to modify the Bidding Documents as deemed advisable by Owner or Engineer.

ARTICLE 8 BID SECURITY:

8.1 All bid forms must be accompanied by a Bid Bond in an amount not less than five percent (5%) of the amount bid. The successful bidder, if awarded the Contract, will be required to furnish a Performance Bond and Payment Bond, each in the amount of one hundred percent (100%) of the Contract amount. All bonds must appear on the Treasury Department's most current Circular 570 Listing.

8.2 The Bid security of Successful Bidder will be retained until such Bidder has executed the Agreement, furnished the required contract security and met the other conditions of the Notice of Award, whereupon the Bid security will

be returned. If the Successful Bidder fails to execute and deliver the Agreement and furnish the required contract security within fifteen days after the Notice of Award, Owner may annul the Notice of Award and the Bid security of that Bidder will be forfeited. The Bid security of other Bidders whom Owner believes to have a reasonable chance of receiving the award may be retained by Owner until the earlier of the seventh day after the Effective Date of the Agreement or the sixty-first day after the Bid opening, whereupon Bid security furnished by such bidders will be returned. Bid security with Bids, which are not competitive, will be returned within seven days after the Bid opening.

ARTICLE 9 CONTRACT COMPLETION TIME: The number of days within which, or by which the Work is to be (a) Substantially Completed and (b) also completed and ready for final payment are set forth in the Agreement. Provisions for liquidated damages, if any, are set forth in the Agreement.

ARTICLE 10 SUBSTITUTES AND "OR EQUAL" TERMS:

10.1 The Contract, if awarded, will be on the basis of materials and equipment specified or described in the Bidding Documents, or those Substitute or "Equal" materials and equipment approved by Engineer. Materials and equipment described in the Bidding Documents establish a standard of required type, function and quality to be met by any proposed Substitute or "Equal" item.

10.2 No item of material or equipment will be considered by Engineer as a Substitute/ "or-equal" unless written request for approval has been submitted by Bidder and has been received by Engineer at least 15 days prior to the date for receipt of Bids. Each such request shall conform to the requirements of Paragraph 6.7.1 of the General Conditions. The burden of proof of the merit of the proposed item is upon Bidder. Engineer's decision of approval or disapproval to allow inclusion of a proposed item in the Bid will be final. Contractor shall refer to General Conditions (Paragraph 6.7.1), Supplementary Conditions (Section 5.0), and the Technical Specifications or further guidance on submittal procedure and approval requirements on substitutes or "or-equal" items.

ARTICLE 11 SUBCONTRACTORS, SUPPLIERS, AND OTHERS:

11.1 If the Supplementary Conditions require the identity of certain Subcontractors, Suppliers, individuals, or entities to be submitted to Owner in advance of a specified date prior to the Effective Date of the Agreement, the apparent Successful Bidder, and any other Bidder so requested, shall within five days after Bid opening, submit to owner a list of all such

Subcontractors, Suppliers, individuals, or entities proposed for those portions of the Work for which such identification is required. Such list shall be accompanied by an experience statement with pertinent information regarding similar projects and other evidence of qualification for each such Subcontractor, Supplier, individual, or entity if requested by Owner. If Owner or Engineer, after due investigation, has reasonable objection to any proposed Subcontractor, Supplier, individual, or entity, Owner may, before the Notice of Award is given, request apparent Successful Bidder to submit a substitute/ "or-equal",

11.2 If apparent Successful Bidder declines to make any such substitution/ "or-eqaul", Owner may award the Contract to the next lowest Bidder that proposes to use acceptable subcontractors, Suppliers, individuals, or entities. Declining to make requested substitutions would not constitute grounds for forfeiture of the bid security of any Bidder. Any Subcontractor, Supplier, individual, or entity so listed and against which Owner or Engineer makes no written objection prior to the giving of the Notice of Award will be deemed acceptable to Owner and Engineer subject to revocation of such acceptance after the Effective Date of the Agreement as provided in paragraph 6.06 of the General Conditions.

11.3 Contractor shall not be required to employ any Subcontractor, Supplier, individual, or entity against whom Contractor has reasonable objection.

ARTICLE 12 **SUBMITTAL OF BIDS**: Bids shall be submitted at the time and place indicated in the Advertisement for Bids and shall be enclosed in a sealed opaque envelope, marked with the project title, and name and address of Bidder, and accompanied by the Bid security and other required documents. If the Bid is sent through the mail or other delivery system, the sealed envelope shall be enclosed in a separate envelope with the notation "BID ENCLOSED" on the face of it.

Each Bidder is responsible for seeing that his Bid is received by the Owner not later than the advertised time set for the opening of Bids.

A. Additional documents required to be completed and included with the submission of each Bid include the following:

1. Section 00210 – Immigration and Security Form

2. Section 00470 – Qualifications of Bidder

3. Section 00480 – Certification of Non-Segregated Facilities

4. Section 00481 – Noncollusion Affidavit of Prime Bidder

5. Section 3 Business Concern, Previous Certificate of Compliance, and Action Plan*

*All contractors wishing to be identified as a Section 3 Business Concern must include a completed (as well as signed and notarized) Section 3 Business Concern, Previous Certificate of Compliance and Action Plan with their bid proposals. In reviewing the bid proposals, any contractors that are identified as qualified Section 3 Business Concerns should be reviewed and if legitimate, granted a Preference in contracting, all other things being equal.

ARTICLE 13 MODIFICATION AND WITHDRAWAL OF BIDS

13.1 Bids may be modified or withdrawn by an appropriate document duly executed (in the manner that a Bid must be executed) and delivered to the place where Bids are to be submitted at any time prior to the opening of bids.

13.2 If, within twenty-four hours after Bids are opened, any Bidder files a duly signed, written notice with Owner and promptly thereafter demonstrates to the reasonable satisfaction of owner that there was a material and substantial mistake in the preparation of its Bid, that Bidder may withdraw its Bid and the Bid security will be returned. Thereafter, that Bidder will be disqualified from further bidding on the Work to be provided.

ARTICLE 14 OPENING OF BIDS: Bids will be opened and (unless obviously non-responsive) read aloud publicly at the place where Bids are to be submitted. An abstract of the amount of the base Bids and major alternates (if any) will be made available to Bidders after the opening of Bids.

ARTICLE 15 ACCEPTANCE OF BIDS: Bids may not be withdrawn (except as noted in Paragraph 13) after the time set for the opening of Bids. Bids will remain subject to acceptance for sixty (60) days after the day of the Bid opening, but the Owner may, in its sole discretion, release any Bid and return the Bid security prior to expiration of the acceptance period.

ARTICLE 16 AWARD OF CONTRACT:

16.1 Owner reserves the right to reject any or all Bids, including without limitation, the rights to reject any or all nonconforming, nonresponsive, unbalanced or conditional Bids and to reject the Bid of any Bidder if Owner believes that it would not be in the best interest of the Project to make an award to that Bidder, whether because the Bid is not responsive, or the Bidder is unqualified or of doubtful financial ability or fails to meet any other pertinent

standard or criteria established by the Owner.

16.2 Owner also reserves the right to waive all informalities not involving price, time or changes in the Work and to negotiate contract terms with the Successful Bidder. Discrepancies between the multiplication of units of Work and unit prices will be resolved in favor of the unit prices. Discrepancies between the indicated sum of any column of figures and the correct sum thereof will be resolved in favor of the correct sum. Discrepancies between words and figures will be resolved in favor of the words.

16.3 In evaluating Bids, Owner will consider the qualification of Bidders, whether or not the Bids comply with the prescribed requirements, and such alternates, unit prices and other data, as may be requested in the Bid Form or prior to the Notice of Award.

The Owner will also consider whether the Bidder involved:

(a) Maintains a permanent place of business;

(b) Has adequate plant and equipment to do the work properly and expeditiously;

(c) Has suitable financial status to meet obligations incidental to the work;

(d) Has appropriate technical experience.

16.4 Owner may consider the qualifications and experience of Subcontractors, Suppliers, and other persons and organizations proposed for those portions of the Work as to which the identity of Subcontractors, Suppliers, and other persons and organizations must be submitted as provided in the Supplementary Conditions. Owner also may consider the operating costs, maintenance requirements, performance data and guarantees of major items of materials and equipment proposed for incorporation in the Work when such data is required to be submitted prior to the Notice of Award.

16.5 Owner may conduct such investigations as Owner deems necessary to assist in the evaluation of any bid and to establish the responsibility, qualifications and financial ability of Bidders, proposed Subcontractors, Suppliers and other persons and organizations to perform and furnish the Work in accordance with the Contract Documents to Owner's satisfaction within the prescribed time.

16.6 If the contract is to be awarded, it will be awarded to the Bidder whose evaluation by Owner indicates to Owner that the award will be in the best

interests of the Project.

16.7 If the contract is to be awarded, Owner will give Successful Bidder a Notice of Award within sixty (60) days after the day of the Bid opening.

ARTICLE 17 **MODIFICATIONS OF QUANTITIES**: If the lowest bona fide Bid exceeds the money available for the Work, the Owner reserves the right to delete enough of the Work to bring the cost within the available funds. The Owner also reserves the right to delete whichever items or portions of items he considers to be in the best interest of the Owner.

ARTICLE 18 **CONTRACT SECURITY**: The General Conditions and Supplementary Conditions set forth Owner's requirements as to performance and payment bonds. When the Successful Bidder delivers the executed Agreement to the Owner, it must be accompanied by the required performance and payment bonds.

ARTICLE 19 **SIGNING THE AGREEMENT**: When the Owner gives a Notice of Award to the Successful Bidder, it will be accompanied by the required number of unsigned counterparts of the Agreement with all other written Contract Documents attached. Within fifteen (15) days thereafter, Contractor shall sign and deliver the required counterparts of the Agreement and attached documents to Owner with the required Bonds. Within ten (10) days thereafter, Owner shall deliver one fully signed counterpart to the Contractor.

ARTICLE 20 **LAWS AND REGULATIONS**: The Contractor shall comply with local, District, County, State and Federal laws applicable to the work.

The Contractor shall comply with the Department of Labor Safety and Health Regulations for Construction promulgated under the Occupational Safety and Health Act of 1970 (PL 91-596) and under Section 107 of the Contract Work and Safety Standards Act (PL 91-54). The regulations are administered by the Department of Labor and the Contractor shall allow access to the project to personnel from that Department.

ARTICLE 21 **CONTRACTOR'S AND SUBCONTRACTOR'S INSURANCE**: Contractor shall not commence work under this contract until he has obtained all the insurance required by the Supplementary Conditions.

ARTICLE 22 **TERMINATION OF CONTRACT**: If the Owner is made to stop construction of the work because of an order from a Court or State Department, the contract shall be terminated. Payment will be made for work completed and a proration of the work underway, materials stored, and for the overhead and profit of the completed work and work underway. Payment will not be made for anticipated profit and overhead on work not completed or underway.

END OF SECTION

SECTION 00210
Immigration and Security Form

IMMIGRATION AND SECURITY FORM

THE SUCCESSFUL BIDDER MUST PROVIDE THE OWNER WITH THE PROPERLY COMPLETED AND PROPERLY SIGNED IMMIGRATION AND SECURITY FORMS AS REQUIRED BY GEORGIA SENATE BILL 529 "GEORGIA SECURITY AND IMMIGRATION COMPLIANCE ACT OF 2006" O.C.G.A. § 13-10-90 AND § 13-10 91

THIS FORM MUST BE COMPLETED BY ALL CONTRACTORS AND SUBCONTRACTORS

THE FORM ATTACHED HERETO.

IMMIGRATION AND SECURITY FORM

A. In order to insure compliance with the Immigration Reform and Control Act of 1986 (IRCA), Pub.L. 99-603 and the Georgia Security and Immigration Compliance Act O.C.G.A. § 13-10-90 et. seq., Contractor must initial one of the sections below:

_____ Contractor has 500 or more employees and Contractor warrants that Contractor has complied with the Immigration Reform and Control Act of 1986 (IRCA) Pub.L. 99-603 and the Georgia Security and Immigration Compliance Act by registering at https://www.vis-dhs.com/EmployerRegistration and verifying information of all new employees; and by executing any affidavits required by the rules and regulation issued by the Georgia Department of Labor set forth at Rule 300-10-1-.01 et. seq.

_____ Contractor has 100-499 employees and Contractor warrants that no later than July 1, 2008, Contractor will register at https://www.vis-dhs.com/EmployerRegistration to verify information of all new employees in order to comply with the Immigration Reform and Control Act of 1986 (IRCA) Pub.L. 99-603 and the Georgia Security and Immigration Compliance Act; and by executing any affidavits required by the rules and regulation issued by the Georgia Department of Labor set forth at Rule 300-10-1-.01 et. seq.

_____ Contractor has 99 or fewer employees and Contractor warrants that no later than July 1, 2009, Contractor will register at https://www.vis-dhs.com/EmployerRegistration to verify information of all new employees in order to comply with the Immigration Reform and Control Act of 1986 (IRCA) Pub.L. 99-603 and the Georgia Security and Immigration Compliance Act; and by executing any affidavits required by the rules and regulation issued by the Georgia Department of Labor set forth at Rule 300-10-1-.01 et. seq.

B. Contractor warrants that Contractor has included a similar provision in all written agreements with any subcontractors engaged to perform services under its Contract(s) with the City of Flowery Branch.

_____ _____

Signature Title

Firm Name:

_____

Street/Mailing Address:

_____

City, State, Zip Code:

_____

Telephone Number:

_____

Email Address:

CONTRACTOR AFFIDAVIT AND AGREEMENT

By executing this affidavit, the undersigned contractor verifies its compliance with O.C.G.A. 13-10-91, stating affirmatively that the individual, firm, or corporation which is contracting with City of Flowery Branch has registered with and is participating in a federal work authorization program* [any of the electronic verification of work authorization programs operated by the United States Department of Homeland Security or any equivalent federal work authorization program operated by the United States Department of Homeland Security to verify information of newly hired employees, pursuant to the Immigration Reform Act of 1986 (IRCA), P.L. 99-603], in accordance with the applicability provisions and deadlines established in O.C.G.A. 13-10-91.

The undersigned further agrees that, should it employ or contract with any subcontractor(s) in connection with the physical performance of services pursuant to this contract with City of Flowery Branch, contractor will secure from such subcontractor(s) similar verification of compliance with O.C.G.A. 13-10-91 on the Subcontractor Affidavit provided in Rule 300-10-01-.08 or a substantially similar form. Contractor further agrees to maintain records of such compliance and provide a copy of each such verification to the City of Flowery Branch at the time the subcontractor(s) is retained to perform such service.

_____
EEV / Basic Pilot Program* User Identification Number

_____
BY: Authorized Officer or Agent
(Contractor Name)

_____
Title of Authorized Officer or Agent of Contractor

_____
Printed Name of Authorized Officer or Agent of Contractor

SUBSCRIBED AND SWORN
BEFORE ME ON THIS THE
_____ DAY OF _____, 20___

_____
Notary Public
My Commission Expires:

* As of the effective date of O.C.G.A. 13-10-91, the applicable federal work authorization program is the "EEV / Basic Pilot Program" operated by the U.S. Citizenship and Immigration Services Bureau of the U.S. Department of Homeland Security, in conjunction with the Social Security Administration (SSA)

(End of Form)

SUBCONTRACTOR AFFIDAVIT

By executing this affidavit, the undersigned contractor verifies its compliance with O.C.G.A. 13-10-91, stating affirmatively that the individual, firm, or corporation which is engaged in the physical performance of services under a contract with City of Flowery Branch has registered with and is participating in a federal work authorization program* [any of the electronic verification of work authorization programs operated by the United States Department of Homeland Security or any equivalent federal work authorization program operated by the United States Department of Homeland Security to verify information of newly hired employees, pursuant to the Immigration Reform Act of 1986 (IRCA), P.L. 99-603], in accordance with the applicability provisions and deadlines established in O.C.G.A. 13-10-91.

_____
EEV / Basic Pilot Program* User Identification Number

_____
BY: Authorized Officer or Agent
(Contractor Name)

_____
Title of Authorized Officer or Agent of Contractor

_____
Printed Name of Authorized Officer or Agent of Contractor

SUBSCRIBED AND SWORN
BEFORE ME ON THIS THE
_____ DAY OF _____, 200___

_____
Notary Public
My Commission Expires:

* As of the effective date of O.C.G.A. 13-10-91, the applicable federal work authorization program is the "EEV / Basic Pilot Program" operated by the U.S. Citizenship and Immigration Services Bureau of the U.S. Department of Homeland Security, in conjunction with the Social Security Administration (SSA)

END OF SECTION

SECTION 00410
BID FORM

PROJECT IDENTIFICATION:

Groundwater Wells #4 & #5

CONTRACT IDENTIFICATION AND NUMBER:

F0002.018

THIS BID IS SUBMITTED TO:

City of Flowery Branch
5410 Pine Street
Flowery Branch, GA 30542

THIS BID IS SUBMITTED FROM:

Bidder: _____

Address: _____

_____

Phone: _____

State of Georgia Business License No.: _____

1. The undersigned Bidder proposes and agrees, if this Bid is accepted, to enter into an agreement with Owner in the form included in the Contract Documents to perform and furnish all Work as specified or indicated in the Contract Documents for the Contract Price and within the Contract Time indicated in this Bid and in accordance with the other terms and conditions of the Contract Documents.

2. Bidder accepts all of the terms and conditions of the Advertisement or Invitation to Bid and Instructions to Bidders, including without limitation those dealing with the disposition of Bid security. This Bid will remain subject to acceptance for 60 days after the day of Bid opening. Bidder will sign and submit the Agreement with the Bonds and other documents required by the Bidding Requirements within fifteen days after the date of Owner's Notice of Award.

3. In submitting this Bid, Bidder represents, as more fully set forth in the Agreement, that:

(a) Bidder has examined copies of all the Bidding Documents and of the following Addenda (receipt of all which is hereby acknowledged):

Date	Addendum Number

(b) Bidder has familiarized itself with the nature and extent of the Contract Documents, Work, site, locality, and all local conditions and Laws and Regulations that in any manner may affect cost, progress, performance or furnishing of the Work.

(c) Bidder has studied carefully all reports and drawings of subsurface conditions and drawings of physical conditions which are identified in the Supplementary Conditions as provided in Paragraph 4.2 of the General Conditions, and accepts the determination set forth in Paragraph 4.2.1 of the Supplementary Conditions of the extent of the technical data contained in such reports and drawings upon which Bidder is entitled to rely.

(d) Bidder has obtained and carefully studied (or assumes responsibility for obtaining and carefully studying) all such examinations, investigations, explorations, tests and studies (in addition to or to supplement those referred to in (c) above) which pertain to the subsurface or physical conditions at the site or otherwise may affect the cost, progress, performance or furnishing of the Work as Bidder considers necessary for the performance or furnishing of the Work at the Contract Price, within the Contract Time and in accordance with the other terms and conditions of the Contract Documents, including specifically the provisions of Paragraph 4.2 of the General Conditions; and no additional examinations, investigations, explorations, tests, reports or similar information or data are or will be required by Bidder for such purposes.

(e) Bidder has reviewed and checked all information and data shown or indicated on the Contract Documents with respect to existing Underground Facilities at or contiguous to the site and assumes responsibility for the accurate location of

said Underground Facilities. No additional examinations, investigations, explorations, tests, reports or similar information or data in respect of said Underground Facilities are or will be required by Bidder in order to perform and furnish the Work at the Contract Price, within the Contract Time and in accordance with the other terms and conditions of the Contract Documents, including specifically the provisions of Paragraph 4.3 of the General Conditions.

(f) Bidder has correlated the results of all such observations, examinations, investigations, explorations, tests, reports and studies with the terms and conditions of the Contract Documents.

Bidder has given Engineer written notice of all conflicts, errors or discrepancies that it has discovered in the Contract Documents and the written resolution thereof by Engineer is acceptable to Bidder.

(g) This Bid is genuine and not made in the interest of or on behalf of any undisclosed person, firm or corporation and is not submitted in conformity with an agreement or rules of any group, association, organization or corporation; Bidder has not directly or indirectly induced or solicited any other corporation to refrain from bidding; and Bidder has not sought by collusion to obtain for itself any advantage over any other Bidder or over Owner.

(h) Bidder agrees to commence work under this Agreement on or before a date to be specified in a written "Notice to Proceed" of the Owner.

(i) Bidder accepts the provisions of the Agreement as to liquidated damages in the event of failure to complete the Work on time.

4. Bidder will complete the Work in accordance with the Contract Documents for the following price(s):

The Contractor is directed to Section 01025 “Measurement and Payment” for the methods and limits for payment to the Contractor for the pay items listed below:

(A) BASE BID: Groundwater Wells #4 & #5

BID FORM BEGINS ON PAGE 4

BID FORM					
ITEM NO	QTY	UNIT	DESCRIPTION	UNIT PRICE	TOTAL PRICE
1	80	CY	Rock Removal - Base	$ 75.00	$ 6,000.00
2	80	CY	Rock Removal - Premium		
3	1	LS	Clearing & Grubbing		
4	1	LS	Demolition		
5	1	LS	Groundwater Wells #4 & #5 Improvements Complete (see Section 01025 for limits and extents of payment under this line item)		
6	50	LF	4" RJ DIP Water Main - Open Cut		
7	70	LF	4" RJ DIP Water Main - Horizontal Directional Drill		
8	1,580	LF	8" RJ DIP Water Main - Open Cut Cross-Country		
9	45	LF	8" RJ DIP Water Main - Open Cut Roads		
10	145	LF	8" DR-11 (DIPS) HDPE Water Main - Horizontal Directional Drill		
11	1	EA	2" Tapping Sleeve & Valve (incl. Valve Box & Cover)		
12	1	EA	6" Tapping Sleeve & Valve (incl. Valve Box & Cover)		
13	1	EA	Cut, Cap, & Abandon Ex. 2" Water Line		
14	5	EA	Longside Water Service Transfer		
15	1	LS	Traffic Control		
16	1	LS	Erosion & Sediment Control Complete		
17	1	LS	Landscaping Replacements		
18	1	LS	Electrical Service Allowance	$ 40,000.00	$ 40,000.00
19	1	LS	Natural Gas Service Allowance	$ 15,000.00	$ 15,000.00

20	1	LS	Groundwater Wells #4 & #5 Rehabilitation Allowance	$ 115,000.00	$ 115,000.00
21	1	LS	Supplemental Work Allowance (SWA)	$ 100,000.00	$ 100,000.00
				TOTAL BASE BID AMOUNT:	

Bidder agrees to furnish all labor, materials, and equipment necessary to construct the **Groundwater Wells #4 & #5** for the City of Flowery Branch for the sum of

_____Dollars

($_____).

6. Bidder agrees that the Work will be substantially complete and ready for final payment in accordance with the completion time/dates provided in the Contract and any Addenda.

7. Bidder accepts the provisions of the Agreement as to liquidated damages in the event of failure to complete the Work within the times specified in the Agreement.

8. The following documents are attached to and made a condition of this Bid:
   a. Required Bid Security in the form of 5% of the Bid Total Price.

9. The undersigned further agrees that in case of failure on his part to execute the said contract and the Bond within fifteen (15) consecutive calendar days after written notice being given of the award of the contract, the check or bid bond accompanying this bid, and the monies payable thereon shall be paid into the funds of the Owner as liquidated damages for such failure, otherwise, the check or bid bond accompanying this proposal shall be returned to the undersigned.

10. Communications concerning this Bid shall be addressed to:
    ESG Engineering, LLC
    6400 Peake Rd
    Macon, GA 31210
    Attn: Rachael Crowell
    rcrowell@esgengineering.com

11. Terms used in this Bid which are defined in the General Conditions or Instructions to Bidders will have the meanings indicated in the General Conditions or Instructions to Bidders.

SUBMITTED on _____, 20____.

BIDDER: _____

BY: _____

TITLE: _____

STATE CONTRACTOR
LICENSE NO. _____

ADDRESS: _____

_____

_____

PHONE: _____

Seal: (if bid by a Corporation)

END OF SECTION

SECTION 00460
BID BOND

STATE OF GEORGIA

COUNTY OF HALL

KNOW ALL MEN BY THESE PRESENTS, that we, _____, as Principal, and _____, as Surety, are held and firmly bound unto the City of Flowery Branch for the sum of Dollars ($_____) lawful money of the United States, for the payment of which sum well and truly to be made, we bind ourselves, our heirs, personal representatives, successors and assigns, jointly and severally, firmly by these presents.

WHEREAS, the Principal has submitted to the Owner a Proposal for construction of:

Groundwater Wells 4 & 5

NOW THEREFORE, the conditions of this obligation are such that if the Bid be accepted, the Principal shall within ten days after receipt of conformed contract documents execute a contract in accordance with the Bid upon the terms, conditions and prices set forth therein, and in the form and manner required by the Owner and execute a sufficient and satisfactory Performance Bond and Payment Bond payable to the Owner, each in an amount of one hundred percent (100%) of the total contract price, in form and with security satisfactory to the Owner, or in the event of the failure of the Contractor to execute and deliver the Contract Agreement and give said Performance and Payment Bonds, the Contractor shall pay the Owner the difference not to exceed the penalty hereof between the amount specified in said Proposal and such larger amount for which the Owner may in good faith contract with another party to perform the work covered by said Proposal, and execute the Special Assurances form, then this obligation shall be void; otherwise, it shall be and remain in full force and virtue in law; and the Surety shall, upon failure of the Principal to comply with any or all of the foregoing requirements within the time specified above, immediately pay to the aforesaid Owner, upon demand, the amount hereof in good and lawful money of the United States of America, not as a penalty, but as liquidated damages.

This bond is given pursuant to and in accordance with the provisions of O.C.G.A. Section 36-91-40 et seq. and Section 30-91-50 et seq. an all the provisions of the law referring to this character of

bond as set forth in said sections or as may be hereinafter enacted and these are hereby made a part hereof to the same extent as if set out herein in full.

IN WITNESS WHEREOF, the said Principal has hereunder affixed its signature and said Surety has hereunto caused to be affixed its corporate signature and seal, by its duly authorized officers, on this ____ day of _____, 20____.

PRINCIPAL: _____

Signed and sealed in the presence of

By: _____

1._____

Title: _____

2._____

SURETY: _____

Signed and sealed in the presence of:

By: _____

1. _____

Title: _____

2. _____

END OF SECTION

SECTION 00470
QUALIFICATIONS OF BIDDER

All questions must be answered and the data given must be clear and comprehensive. This statement must be notarized. If necessary, questions may be answered on separate attached sheets. The Bidder may submit any additional information he desires.

1. Legal Name of Bidder.

2. Permanent main office address.

3. When organized.

4. If a corporation, where incorporated.

5. How many years have you been engaged in the contracting business under your present firm or trade name?

6. Contract on hand: (Schedule these, showing amount of each contract and the appropriate anticipated dates of completion.)

7. General character of work performed by your company.

8. Have you ever failed to complete any work awarded to you? If so, where and why?

9. Have you ever defaulted on a contract? If so, where and why?

10. List the more important projects recently completed by your company, stating the approximate cost for each, and the month and year completed.

11. List your major equipment <u>available for this contract.</u>

12. Experience in construction work similar in importance to this project.

13. Background and experience of the principal members of your organization, including the officers.

14. Credit available: $_____.

15. Give Bank Reference _____.

16. Will you, upon request, fill out a detailed financial statement and furnish any other information that may be required by the _____.

17. The undersigned authorizes and requests any person, firm, or corporation to furnish any information requested by the _____, Georgia in verification of the recitals comprising the Statement of Bidder's Qualifications. Dated at _____this ____day of _____, 20_____.

_____
(Name of Bidder)

By _____

Title _____

State of _____

County of _____

_____, being duly sworn deposes and

says that he is _____ of _____
(name of organization)

and that the answers to the foregoing questions and all statements therein contained are true and correct.

Subscribed and sworn to before me this ___ day of _____, 20____.

_____
(Notary Public)

My Commission expires:

_____, 20___

SECTION 00480
CERTIFICATION OF NONSEGREGATED FACILITIES

(To be completed and submitted with Bid)

Bidder certifies that he does not maintain or provide for his employees any segregated facilities at any of his establishments, and that he does not permit his employees to perform their services at any location, under his control, where segregated facilities are maintained. The Bidder agrees that a breach of this certification will be a violation of the Equal Opportunity clause in any contract resulting from acceptance of this bid. As used in this certification, the term "segregated facilities" means any waiting rooms, work areas, restrooms and washrooms, restaurants and other eating areas, timeclocks, locker rooms, and other storage or dressing areas, parking lots, drinking fountains, recreation or entertainment areas, transportation, and housing facilities provided for employees which are segregated by explicit directive or are in fact segregated on the basis of race, color, religion, or national origin, because of habit, local custom, or otherwise. The Bidder agrees that (except where he has obtained identical certification from proposed subcontractors for specific time periods) he will obtain identical certifications from proposed subcontractors prior to the award of subcontracts exceeding $10,000 which are not exempt from the provisions of the Equal Opportunity clause, and that he will retain such certification in his files.

Note: The penalty for making false statements in offers is prescribed in 18 U.S.C. & 1001.

Date _____, 20___ _____
(Name of Bidder)

Official Address

_____

_____

BY:_____

TITLE:_____

SECTION 00481
NONCOLLUSION AFFIDAVIT OF PRIME BIDDER

State of Georgia

County of Hall

_____, being first duly sworn, deposed and says that:

(1) He is

_____ of
(owner, partner, officer, representative, or agent)

_____, the Bidder that has submitted the attached Bid;

(2) He is fully informed respecting the preparation and contents of the attached Bid and of all pertinent circumstances respecting such Bid;

(3) Such Bid is genuine and is not a collusive or sham Bid;

(4) Neither the said Bidder nor any of its officers, partners, owners, agents, representatives, employees or parties in interest, including this affidavit, has in any way colluded, conspired, connived or agreed, directly or indirectly with any other Bidder, firm or person to submit a collusive or sham Bid in connection with the Contract for which the attached Bid has been submitted or to refrain from bidding in connection with such contract, or has in any manner directly or indirectly sought by agreement or collusion or communication or conference with any other Bidder, firm or person to fix the price or prices in the attached Bid or of any other Bidder, or to fix any overhead, profit or cost element of the Bid price or the Bid price of any other Bidder, or to secure through any collusion, conspiracy, connivance or unlawful agreement any advantage against the **City of Flowery Branch** or any person interested in the proposed Contract and;

(5) The price or prices quoted in the attached Bid are fair and proper and are not tainted by any collusion, conspiracy, connivance or unlawful agreement on the part of the Bidder or any of its agents, representatives, owners, employees, or parties in interest, including this affidavit.

By: _____

Title: _____

Subscribed and sworn to before me this ____ day of _____, 20____.

_____
(Notary Public)

My commission expires _____, 20___.

SECTION 00500
AGREEMENT

THIS AGREEMENT is dated as of the ___ day of _____ in the year 20___, by and between the

City of Flowery Branch (hereinafter called OWNER) and _____

(hereinafter called CONTRACTOR).

OWNER and CONTRACTOR, in consideration of the mutual covenants hereinafter set forth, agree as follows:

Article 1. WORK.

CONTRACTOR shall complete all Work as specified or indicated in the Contract Documents. The Work is generally described as follows:

This project will bring two existing wells online to enhance the City's water supply system. The work includes construction of a chemical feed building and covered steel structure, installation of approx. 2,000 LF of new water mains, water service transfers, reconditioning of two (2) existing wells with testing, cleaning, air bursting, new pumps, piping, enclosures, etc., electrical & controls improvements, and site improvements. Site work will involve clearing & grubbing, demolition, grading, drainage, fencing, and erosion control. Water main extensions will be installed using horizontal directional drilling (HDD) and open-cut trenching methods. Work also includes traffic control, utility service coordination, and other miscellaneous related work.

Article 2. ENGINEER.

The Project has been designed by **ESG Engineering, LLC** who is hereinafter called ENGINEER and who is to act as OWNER's representative, assume all duties and responsibilities and have the rights and authority assigned to ENGINEER in the Contract Documents in connection with completion of the Work in accordance with the Contract Documents.

Article 3. CONTRACT TIME.

3.1. CONTRACTOR agrees to commence Work under this Agreement on or before a date to be specified on a written "Notice to Proceed" of the OWNER and to fully complete the Work within 180 consecutive calendar days from the "Notice to Proceed" date.

3.2. Liquidated Damages. OWNER and CONTRACTOR recognize that time is of the essence of this Agreement and that OWNER will suffer financial loss if the Work is not completed within the times specified in Paragraph 3.1 above, plus any extensions

thereof allowed in accordance with Article 12 of the General Conditions. They also recognize the delays, expense and difficulties involved in proving in a legal or arbitration proceeding the actual loss suffered by OWNER if the Work is not completed on time. Accordingly, instead of requiring any such proof, OWNER and CONTRACTOR agree that as liquidated damages for delay (but not as a penalty) CONTRACTOR shall pay OWNER Five Hundred Dollars ($500.00) for each day that expires after the time specified in Paragraph 3.1.

Article 4. CONTRACT PRICE.

OWNER shall pay CONTRACTOR for completion of the Work in accordance with the Contract Documents in current as follows:

_____

Article 5. PAYMENT PROCEDURES.

CONTRACTOR shall submit Applications for Payment in accordance with Article 14 of the General Conditions. Applications for Payment will be processed by ENGINEER as provided in the General Conditions.

5.1 Progress Payments; Retainage. OWNER shall make progress payments on account of the Contract Price on the basis of CONTRACTOR'S Applications for Payment as recommended by ENGINEER, on or about the 25th day of each month during performance of the Work as provided in Paragraphs 5.1.1, 5.1.1.2 and 5.2 below. All such payments will be measured by the schedule of values established in Paragraph 14.1 of the General Conditions.

5.1.1 For Cost of Work: Progress payments on account of the Cost of the Work will be made:

5.1.1.1 Prior to Substantial Completion, progress payments will be made in an amount equal to the percentage indicated below, but, in each case, less the aggregate of payments previously made and less such amounts as ENGINEER shall determine, or OWNER may withhold, including but not limited to liquidated damages, in accordance with Paragraph 14.2 of the General Conditions.

95% of the work completed (with balance being retainage). If Work has been 50% completed as determined by ENGINEER, and if the character and progress of the Work have been satisfactory to OWNER and ENGINEER, OWNER, on recommendation of ENGINEER, may determine that as long as the character and progress of the Work remain satisfactory to them, there will be no additional retainage on

account of Work completed, in which case the remaining progress payments prior to Substantial Completion will be in an amount equal to 100% of the Work completed.

95% of the Cost of the Work (with the Balance being retainage) applicable to materials and equipment not incorporated in the Work (but delivered, suitably stored and accompanied by documentation satisfactory to OWNER as provided in Paragraph 14.2 of the General Conditions).

5.1.1.2 Upon Substantial Completion, Owner shall pay an amount sufficient to increase total payments to Contractor to 100 percent of the Work completed, less 200 percent of the Market value of the Work remaining and less such amounts as Engineer shall determine in accordance with Paragraph 14.7 of the General Conditions.

5.2 Final Payment. Upon final completion and acceptance of the Work in accordance with Paragraph 14.7 of the General Conditions, OWNER shall pay the remainder of the Contract Price as recommended by ENGINEER as provided in said Paragraph 14.13.

Article 6. CONTRACTOR'S REPRESENTATIONS.

In order to induce OWNER to enter into this Agreement CONTRACTOR makes the following representations:

6.1 CONTRACTOR has familiarized itself with the nature and extent of the Contract Documents, Work, site, locality, and all local conditions and Laws and Regulations that in any manner may affect cost, progress, performance or furnishing of the Work.

6.2 CONTRACTOR has studied carefully all reports of explorations and tests of subsurface conditions and drawings of physical conditions which are identified in the Supplementary Conditions as provided in Paragraph 4.2 of the General Conditions, and accepts the determination set forth in Paragraph 5 of the Supplementary Conditions of the extent of the technical data contained in such reports and drawings upon which CONTRACTOR is entitled to reply.

6.3 CONTRACTOR has obtained and carefully studied (or assumes responsibility for obtaining and carefully studying) all such examinations, investigations, explorations, tests, reports and studies (in addition to or to supplement those referred to in Paragraph 6.2 above) which pertain to the subsurface or physical conditions at or contiguous to the site or otherwise may affect the cost, progress, performance or furnishing of the Work as CONTRACTOR considers necessary for the performance or furnishing of the Work at the Contract Price, within the Contract Time and in

accordance of Paragraph 4.2 of the General Conditions; and no additional examinations, investigations, explorations, tests, reports, studies or similar information or data are or will be required by CONTRACTOR for such purposes.

6.4 CONTRACTOR has reviewed and checked all information and data shown or indicated on the Contract Documents with respect to existing Underground Facilities at or contiguous to the site and assumes responsibility for the accurate location of said Underground Facilities. No additional examinations, investigations, explorations, tests, reports, studies or similar information or data in respect of said Underground Facilities are or will be required by CONTRACTOR in order to perform and furnish the Work at the Contract Price, within the Contract Time and in accordance with the other terms and conditions of the Contract Documents, including specifically the provisions of Paragraph 4.3 of the General Conditions.

6.5 CONTRACTOR has correlated the results of all such observations, examinations, investigations, explorations, tests, reports and studies with the terms and conditions of the Contract Documents.

6.6 CONTRACTOR has given ENGINEER written notice of all conflicts, errors or discrepancies that he has discovered in the Contract Documents and the written resolution thereof by ENGINEER is acceptable to CONTRACTOR.

Article 7. CONTRACT DOCUMENTS.

7.1 This Agreement

7.2 Exhibits to this Agreement

7.3 Performance and other Bonds

7.4 Notice of Award

7.5 General Conditions

7.6 Supplementary Conditions

7.7 GEFA Supplemental General Conditions

7.8 Specifications bearing the title City of Flowery Branch Groundwater Wells #4 & #5 consisting of divisions as listed in table of contents thereof.

7.9 Drawings, consisting of a cover sheet and sheets numbered C0.0 through C9.6, inclusive with each sheet bearing the following general title: City of Flowery Branch Groundwater Wells #4 & #5

7.10 Addenda numbers __ to __, inclusive.

7.11 CONTRACTOR's Bid

7.12 Documentation submitted by CONTRACTOR prior to Notice of Award.

7.13 The following which may be delivered or issued after the Effective Date of the Agreement and are not attached hereto: All Written Amendments and other documents amending, modifying, or supplementing the Contract Documents pursuant to Paragraphs 3.4 and 3.5 of the General Conditions.

7.14 The documents listed in Paragraphs 7.2 et seq. above are attached to this Agreement (Except as expressly noted otherwise above).

There are no Contract Documents other than those listed above in this Article 7. The Contract Documents may only be amended, modified, or supplemented as provided in Paragraphs 3.4 and 3.5 of the General Conditions.

Article 8. MISCELLANEOUS

8.1 Terms used in this Agreement which are defined in Article 1 of the General Conditions will have the meanings indicated in the General Conditions.

8.2 No assignment by a party hereto of any rights under or interests in the Contract Documents will be binding on another party hereto without the written consent of the party sought to be bound; and specifically but without limitation moneys that may become due and moneys that are due may not be assigned without such consent (except to the extent that the effect of this restriction may be limited by law), and unless specifically stated to the contrary in any written consent to an assignment no assignment will release or discharge the assignor from any duty or responsibility under the Contract Documents.

8.3 OWNER and CONTRACTOR each binds itself, its partners, successors, assigns and legal representatives to the other party hereto, its partners, successors, assigns and legal representatives in respect of all covenants, agreements and obligations contained in the Contract Documents.

8.4 Any provision or part of the Contract documents held void or unenforceable under any Law or Regulation shall be deemed stricken, and all remaining provisions shall continue to be valid and binding upon OWNER and CONTRACTOR, who agree that the Contract documents shall be reformed to replace such stricken provision or part thereof with a valid and enforceable provision that comes as close as possible to expressing the intention of the stricken provision.

Article 9. OTHER PROVISIONS.

IN WITNESS WHEREOF. OWNER and CONTRACTOR have signed this Agreement in four (4) counterparts. One counterpart each has been delivered to OWNER, CONTRACTOR and ENGINEER. All portions of the Contract Documents have been signed or identified by OWNER and CONTRACTOR or by ENGINEER on their behalf.

This Agreement will be effective on _____, 20___.

OWNER	CONTRACTOR
By _____	By _____
[CORPORATE SEAL]	[CORPORATE SEAL]
Attest _____	Attest _____
Address for giving notices	Address for giving notices
City of Flowery Branch	_____
5410 Pine Street	_____
Flowery Branch, GA 30542	_____
(If OWNER is a public body, attach evidence of authority to sign and resolution or other documents authorizing execution of Agreement)	
License No._____	

Agent for service of process: _____

_____

(If CONTRACTOR is a corporation, attach evidence of authority to sign)

END OF SECTION

SECTION 00610
PERFORMANCE BOND

STATE OF GEORGIA

COUNTY OF HALL

KNOW ALL MEN BY THESE PRESENTS, that we, _____

_____

(Name and Address of Contractor)

as Principal (hereinafter known as "CONTRACTOR"), and we, _____

_____

(Name and Address of Surety)

as Surety, do hereby acknowledge ourselves indebted and firmly bound and held unto the City of Flowery Branch for the use and benefit of those entitled thereto, in the sum of

_____ Dollars (_____)
(Contract Sum)

for the payment of which well and truly to be made, in lawful money of the United States, we do hereby bind ourselves, successors, assigns, heirs, and personal representatives.

BUT THE CONDITION OF THE FOREGOING OBLIGATION OR BOND IS THIS:

WHEREAS, the OWNER has engaged the said CONTRACTOR for the sum of
_____ Dollars (_____)
(Contract Sum)

for the construction of: City of Flowery Branch - Groundwater Wells #4 & #5
(Name of Contract/Project)

as more fully appears in a written Agreement bearing the date of _____, 20_____, a copy of which Agreement is by reference hereby made a part hereof.

NOW, THEREFORE, if said Contractor shall fully and faithfully perform all the undertakings and obligations under the said agreement or contract hereinbefore referred to and shall fully indemnify and save harmless the said OWNER from all costs and damage whatsoever which it may suffer by reason of any failure on the part of said CONTRACTOR to do so, and shall fully reimburse and repay the said default, and shall guarantee all products and workmanship against defects for a period of one year, then this obligation or bond shall be null and void, otherwise, it shall remain in full force and effect.

And for value received it is hereby stipulated and agreed that no change, extension of time, alteration or addition to the terms of the said Agreement or Contract or in the work to be performed there under, or the Specifications accompanying the same shall in any way affect the obligations under the obligation or bond, and notice is hereby waived of any such damage, extension of time, alteration or addition to the terms of the Agreement or Contract or to the work or to the Specifications.

This bond is given pursuant to and in accordance with the provisions of O.C.G.A. Section 36-91-40 et seq and 36-91-70 et seq and all the provisions of the law referring to this character of bond as set forth in said sections or as may be hereinafter enacted and these are hereby made a part hereof to the same extent as if set out herein in full.

IN WITNESS WHEREOF, the said CONTRACTOR has hereunder affixed its signature and said Surety has hereunto caused to be affixed its corporate signature and seal, by its duly authorized officers, on this ___ day of _____, 20____. Executed in 4 counterparts.

SECTION IS CONTINUED ON PAGE 3

CONTRACTOR: _____

Signed and sealed in the presence of:

By: _____

1._____ Title: _____

2._____ (SEAL)

SURETY: _____

Signed and sealed in the presence of:

By: _____

1. _____ Title: _____

2. _____ (SEAL)

NOTE:

1. Date of bond must not be prior to date of contract. If CONTRACTOR is a PARTNERSHIP, all partners should execute bond.

2. Surety companies executing bonds must appear on the Treasure Department's most current list (circular 570 as amended) and be authorized to transact business in the state where the PROJECT is located.

END OF SECTION

SECTION 00615
PAYMENT BOND

STATE OF GEORGIA

COUNTY OF HALL

KNOW ALL MEN BY THESE PRESENTS, that we, _____

_____

(Name and Address of Contractor)

as Principal (hereinafter known as "CONTRACTOR"), and we, _____

_____

(Name and Address of Surety)

as Surety, do hereby acknowledge ourselves indebted and firmly bound and held unto the City of Flowery Branch for the use and benefit of those entitled thereto, in the sum of

_____ Dollars (_____)

(Contract Sum)

for the payment of which well and truly to be made, in lawful money of the United States, we do hereby bind ourselves, successors, assigns, heirs, and personal representatives.

BUT THE CONDITION OF THE FOREGOING OBLIGATION OR BOND IS THIS:

WHEREAS, the OWNER has engaged the said CONTRACTOR for the sum of

_____ Dollars (_____)

(Contract Sum)

for the construction of: City of Flowery Branch – Groundwater Wells #4 & #5

(Name of Contract/Project)

as more fully appears in a written Agreement bearing the date of _____, 20_____, a copy of which Agreement is by reference hereby made a part hereof.

NOW, THEREFORE, THE CONDITION OF THIS OBLIGATION IS SUCH, that if said CONTRACTOR and all subcontractors to whom any portion of the work provided for in said Contract is sublet and all assignees of said Contractor and of such subcontractors shall promptly make payments to all persons supplying him or them with labor, products, services, or supplies for or in the prosecution of the work provided for in such Contract, or in any amendment or extension of or addition to said Contract, and for the payment of reasonable attorney's fees, incurred by the claimants in suits on this bond, then the above obligation shall be void; otherwise, it shall remain if full force and effect.

HOWEVER, this bond is subject to the following conditions and limitations:

(a) Any person, firm or corporation that has furnished labor, products, or supplies for or in the prosecution of the work provided for in said Contract shall have a direct right of action against the CONTRACTOR and Surety on this bond, which right of action shall be asserted in a proceeding, instituted in the County in which the work provided for in said Contract is to be performed or in any county in which Contractor or Surety does business. Such right of action shall be asserted in proceedings instituted in the name of the claimant or claimants for his or their use and benefit against said CONTRACTOR or Surety or either of them (but not later than one year after the final settlement or said Contract) in which action such claim or claims shall be adjudicated and judgment rendered thereon.

(b) The Principal and Surety hereby designate and appoint the _____, as the agent of each them to receive and accept service of process or other pleading issued or filed in any proceeding instituted on this bond and hereby consent that such service shall be the same as personal service on the CONTRACTOR and/or Surety.

(c) In no event shall the Surety be liable for a greater sum than the penalty of this bond, or subject to any suit, action or preceding thereon that is instituted later than one year after the final settlement of said Contract.

(d) This bond is given pursuant to and in accordance with provisions of O.C.G.A. Section 36-91-40 et seq and 36-91-90 et seq and all the provisions of law referring to this character of bond as set forth in said sections or as may be hereinafter enacted, and these are hereby made a part hereof to the same extent as if set out herein in full.

IN WITNESS WHEREOF, the said CONTRACTOR has hereunder affixed its signature and said Surety has hereunto caused to be affixed its corporate signature and seal, by its duly authorized officers, on this __ day of _____, 20_____. Executed in 4 counterparts.

CONTRACTOR: _____

Signed and sealed in the presence of:

By: _____

1._____ Title: _____

2._____ (SEAL)

SURETY: _____

Signed and sealed in the presence of:

By: _____

1. _____ Title: _____

2. _____ (SEAL)

NOTE:

1. Date of bond must not be prior to date of contract. If CONTRACTOR is a PARTNERSHIP, all partners should execute bond.

2. Surety companies executing bonds must appear on the Treasure Department's most current list (circular 570 as amended) and be authorized to transact business in the state where the PROJECT is located.

END OF SECTION

SECTION 00621
NOTICE OF AWARD

PROJECT DESCRIPTION: **City of Flowery Branch – Groundwater Wells #4 & #5**

The OWNER has considered the BID submitted by you for the above-described WORK in response to its Advertisement for Bids dated _____, and Instruction to Bidders.

You are hereby notified that your BID has been accepted for items in the amount of

_____

($_____).

You are required by the Instructions to Bidders to execute the Agreement and furnish the required CONTRACTOR's Performance BOND, Payment BOND and Certificates of Insurance with fifteen (15) calendar days from the date of the Notice to you.

If you fail to execute said Agreement and to furnish said BONDS within fifteen (15) days from the date of this notice, said OWNER will be entitled to consider all your rights arising out of the OWNER'S acceptance of your BID as abandoned and as a forfeiture of your BID BOND. The OWNER will be entitled to such other rights as may be granted by law.

You are required to return an acknowledged copy of this NOTICE of AWARD to the OWNER.

Dated this _____ day of _____, 20___.

_____City of Flowery Branch_____
OWNER

By: _____

Title: _____

ACCEPTANCE OF NOTICE

Receipt of the above NOTICE OF AWARD is hereby acknowledged by _____ this ____ day of _____, 20____.
(Contractor)

By: _____
Title: _____

SECTION 00622
NOTICE TO PROCEED

To: _____ Date: _____

Project:

_____ City of Flowery Branch
Groundwater Wells #4 & #5

_____ _____

You are hereby notified to commence WORK in accordance with the Agreement dated on or before _____, and you are to complete the WORK within 180 consecutive calendar days thereafter. The date of completion of all WORK is therefore _____.

_____City of Flowery Branch_____
OWNER

By _____

Title:_____

ACCEPTANCE OF NOTICE

Receipt of the above NOTICE
TO PROCEED is hereby
acknowledged by

_____,

this the _____ day of _____, 20___

By _____

Title _____

SECTION 00700
GENERAL CONDITIONS

TABLE OF CONTENTS

Article Number	Title	Page
1	DEFINITIONS	00700-6
2	PRELIMINARY MATTERS	00700-7
3	CONTRACT DOCUMENTS: INTENT, AMENDING AND REUSE	00700-8
4	AVAILABILITY OF LANDS; PHYSICAL CONDITIONS; REFERENCE POINTS	00700-9
5	BONDS AND INSURANCE	00700-11
6	CONTRACTOR'S RESPONSIBILITIES	00700-13
7	OTHER WORK	00700-18
8	OWNER'S RESPONSIBILITIES	00700-19
9	ENGINEER'S STATUS DURING CONSTRUCTION	00700-19
10	CHANGES IN THE WORK	00700-21
11	CHANGE OF CONTRACT PRICE	00700-22
12	CHANGE OF CONTRACT TIME	00700-25
13	WARRANTY AND GUARANTEE; TESTS AND INSPECTIONS; CORRECTION, REMOVAL OR ACCEPTANCE OF DEFECTIVE WORK	00700-25
14	PAYMENTS TO CONTRACTOR AND COMPLETION	00700-27
15	SUSPENSION OF WORK AND TERMINATION	00700-30
16	ARBITRATION	00700-32
17	MISCELLANEOUS	00700-32

INDEX

Article of Paragraph	Number
Acceptance of Insurance	5.13
Access to the Work	13.2
Addenda--definition of (see definition of Specifications)	1
Agreement--definition of	1
All Risk Insurance	5.6
Amendment, Written	1, 3.1.1
Application for Payment--definition of	1
Application for Payment, Final	14.12
Application for Progress Payment	14.2
Application for Progress Payment--review of	14.4 14.7
Arbitration	16
Authorized Variation in Work	9.5
Availability of Lands	4.1
Award, Notice of--defined	1
Before Starting Construction	2.5-2.8
Bid--definition of	1
Bonds and Insurance--in general	5
Bonds--definition of	1
Bonds, Delivery of	2.1-5.1
Bonds, Performance and Other	5.1-5.2
Cash Allowances	11.8
Change Order--definition of	1
Change Orders--to be executed	10.4
Changes in the Work	10
Claims, Waiver of--on Final Payment	14.16
Clarifications and Interpretations	9.4
Cleaning	6.17
Completion	14
Completion, Substantial	14.8-14.9
Conference, Preconstruction	2.8
Conflict, Error, Discrepancy--Contractor to Report	2.5,3.3
Construction Machinery, Equipment, etc.	6.4
Continuing Work	6.29
Contract Documents--amending and supplementing	3.4-3.5
Contract Documents--definition of	1
Contract Documents--Intent	3.1-3.3
Contract Documents--Reuse of	3.6
Contract Price, Change of	11
Contract Price—definition	1
Contract Time, Change of	12
Contract Time, Commencement of	2.3
Contract Time--definition of	1
Contractor--definition of	1
Contractor May Stop Work or Terminate	15.5
Contractor's Continuing Obligation	14.15
Contractor's Duty to Report Discrepancy in Documents	2.5, 3.2
Contractor's Fee--Cost Plus	11.4.5.6, 11.5.1, 11.6-11.7
Contractor's Liability Insurance	5.3
Contractor's Responsibilities--in general	6
Contractor's Warranty of Title	14.3
Contractor—other	7
Contractual Liability Insurance	5.4
Coordinating Contractor--definition of	7.4
Coordination	7.4
Copies of Documents	2.2
Correction or Removal of Defective Work	13.11
Correction Period, One Year	13.12
Correction, Removal or Acceptance of *Defective* Work--in general	13.11-13.14
Cost--net decrease	11.6.2
Cost of Work	11.4-11.5
Costs, Supplemental	11.4.5
Day--definition of	1
Defective--definition of	1
Defective Work, Acceptance of	13.13
Defective Work, Correction or Removal of	13.11
Defective Work--in general	13.14.7 14.11
Defective Work, Rejecting	9.6
Definitions	1
Delivery of Bonds	2.1
Determination for Unit Prices	9.10
Disputes, Decisions by Engineer	9.11- 9.12
Documents, Copies of	2.2
Documents, Record	6.19
Documents, Reuse	3.6
Drawings--definition of	1
Easements	4.1
Effective date of Agreement—definition of	1
Emergencies	6.22
Engineer--definition of	1
Engineer's Decisions	9.10-9.12
Engineer's--Notice Work is Acceptable	14.13
Engineer's Recommendation of Payment	14.4, 14.13
Engineer's Responsibilities, Limitations on	6.6, 9.11, 9.13-9.16
Engineer's Status During Construction--in general	9
Equipment, Labor, Materials and	6.3-6.6

Equivalent Materials and Equipment 6.7
Explorations of physical conditions 4.2

Fee, Contractor's--Costs Plus 11.6
Field Order--definition of 1
Field Order--issued by Engineer 3.5.1
9.5
Final Application for Payment 14.12
Final Inspection 14.11
Final Payment and Acceptance 14.13
Final Payment, Recommendation of 14.13-
14.14

General Provisions 17.3-17.4
General Requirements--definition of 1
General Requirements--principal
references to 2.6,4.4
6.4, 6.6-
6.7,6.23
Giving Notice 17.1
Guarantee of Work--by Contractor 13.1

Indemnification 6.30-6.32,
7.5
Inspection, Final 14.11
Inspection, Tests and 13.3
Insurance, Bonds and--in general 5
Insurance, Certificates of 2.7,5
Insurance--completed operations 5.3
Insurance, Contractor's Liability 5.3
Insurance, Contractual Liability 5.4
Insurance, Owner's Liability 5.5
Insurance, Property 5.6, 5.13
Insurance--Waiver of Rights 5.11
Intent of Contract Documents 3.3, 9.14
Interpretations and Clarifications 9.4
Investigations of physical conditions 4.2

Labor, Materials and Equipment 6.3-6.5
Laws and Regulations-- definition of 1
Laws and Regulations—general 6.14
Liability Insurance--Contractor's 5.3
Liability Insurance--Owner's 5.5
Liens--definitions of 14.2
Limitations on Engineer's
Responsibilities 6.6, 9.11,
9.13-9.16

Materials and equipment-- furnished by
Contractor 6.3
Materials and equipment--not
incorporated in Work 14.2
Materials or equipment-- equivalent 6.7
Miscellaneous Provisions 17
Multi-prime contracts 7

Notice, Giving of 17.1
Notice of Acceptability of Project 14.13
Notice of Award--definition of 1
Notice to Proceed--definition of 1
Notice to Proceed--giving of 2.3

"Or-Equal" Items 6.7
Other contractors 7
Other work 7
Overtime Work--prohibition of 6.3
Owner--definition of 1
Owner May Correct *Defective* Work 13.14
Owner May Stop Work 13.10
Owner May Suspend Work, Terminate 15.1-
15.4
Owner's Duty to Execute Change Orders 11.8
Owner's Liability Insurance 5.5
Owner's Representative-- Engineer to
serve as 9.1
Owner's Responsibilities--in general 8
Owner's Separate Representative at site 9.3

Partial Utilization 14.10
Partial Utilization--definition of 1
Partial Utilization--Property Insurance 5.15
Patent Fees and Royalties 6.12
Payments, Recommendation of 14.4-
14.7,
14.13
Payments to Contractor--in general 14
Payments to Contractor--when due 14.4,
14.13
Payments to Contractor--withholding 14.7
Performance and other Bonds 5.1-
5.2
Permits 6.13
Physical Conditions 4.2
Physical Conditions-Engineer's review 4.2.4
Physical Conditions-existing structures 4.2.2
Physical Conditions-explorations and reports 4.2.1
Physical Conditions-possible document
change 4.2.5
Physical Conditions-price and
time adjustments 4.2.5
Physical Conditions-report of differing 4.2.3
Physical Conditions-Underground Facilities 4.3
Preconstruction Conference 2.8
Preliminary Matters 2

Premises, Use of 6.16-6.18
Price,Change of Contract 11
Price-Contract--definition of 1
Progress Payment, Applications for 14.2
Progress Payment - retainage 14.2

Progress schedule 2.6, 2.9, 6.6, 6.29, 15.2.6.
Project, definition of 1
Project Representation--provision of 9.3
Project Representation, Resident-- definition of 1
Project, Starting the 2.4
Property Insurance 5.6-5.13
Property Insurance-Partial Utilization 5.15
Property Insurance--Receipt and Application of Proceeds 5.12-5.13
Protection, Safety and 6.20-6.21
Punch list 14.11

Recommendations of Payment 14.4, 14.13
Record Documents 6.19
Reference Points 4.4
Regulations, Laws and 6.14
Rejecting *Defective* Work 9.6
Related Work at Site 7.1-7.3
Remedies Not Exclusive 17.4
Removal or Correction of *Defective* Work 13.11
Resident Project Representative-- definition of 1
Resident Project Representative-- provision for 9.3
Responsibilities, Contractor's-- in general 6
Responsibilities, Engineer's-- in general 9
Responsibilities, Owner's-- in general 8
Retainage 14.2
Reuse of Documents 3.5
Rights of Way 4.1
Royalties, Patent Fees and 6.12

Safety and Protection 6.20-6.21
Samples 6.23-6.28
Schedule of progress 2.6, 2.8-2.9, 6.6, 6.29, 15.2.6
Schedule of Shop Drawing Submissions 2.6,2.8-2.9, 6.23, 14.1
Schedule of values 2.6-2.8 14.1
Schedules, Finalizing 2.8
Shop Drawing and Samples 6.23-6.28
Shop Drawings--definition of 1
Shop Drawings, use to approve substitutions 6.7.3
Site, Visits to--by Engineer 9.2
Specifications--definition of 1
Starting Construction, Before 2.5-2.8
Starting the Project 2.4
Stopping Work--by Contractor 15.5
Stopping Work--by Owner 13.10
Subcontractor--definition of 1
Subcontractors--in general 6.8-6.11
Subcontracts--required provisions 5.11.1, 6.11, 11.4.3
Substantial Completion-- certification of 14.8
Substantial Completion-- definition of 1
Substitute or "Or-Equal" Items 6.7
Subsurface Conditions 4.2-4.3
Supplemental costs 11.4.5
Supplementary Conditions-- definition of 1
Supplementary Conditions--principal references to 2.2, 4.2, 5.1, 5.3, 5.6-5.8, 6.3, 6.13, 6.23, 7.4, 9.3
Supplementing Contract Documents 3.4-3.5
Supplier--definition of 1
Supplier--principal references to 3.6, 6.5, 6.7-6.9, 6.20, 6.24, 9.13, 9.16, 11.8, 13.14, 14.12
Surety--consent to payment 14.12, 14.14
Surety--Engineer has no duty to 9.13
Surety--notice to 10.1, 10.5, 15.2
Surety--qualification of 5.1, 5.2
Suspending Work, by Owner 15.1
Suspension of Work and Termination in general 15
Superintendent--Contractor's 6.2

Supervision and Superintendence 6.1-6.2

Taxes--Payment by Contractor 6.15
Termination--by Contractor 15.5
Termination--by Owner 15.2-15.4
Termination, Suspension of Work and --in general 15
Tests and Inspections 13.3-13.7
Time, Change of Contract 12
Time, Computation of 17.2
Time, Contract--definition of 1

Uncovering Work 13.8-13.9
Underground Facilities--definition Of 1
Underground Facilities--not shown or indicated 4.3.2
Underground Facilities--protection of 4.3,6.20
Underground Facilities--shown or indicated 4.3.1
Unit Price Work--definition of 1
Unit Price Work-- general 11.9, 14.1, 14.5
Unit Prices 11.3.1
Unit Prices, Determinations for 9.10
Use of Premises 6.16-6.18
Utility owners 6.13, 6.20, 7.2-7.3
Values, Schedule of 2.6, 2.8, 14.1
Variations in Work--Authorized 6.25, 6.27, 9.5
Visits to Site--by Engineer 9.2

Waiver of Claims--on Final Payment 14.16
Waiver of Rights by insured parties 5.10, 6.11
Warranty and Guarantee--by Contractor 13.1
Warranty of Title, Contractor's 14.3
Work, Access to 13.2
Work--by others 7
Work Continuing During Disputes 6.29
Work, Cost of 11.4-11.5
Work--definition of 1
Work Directive Change--definition of 1
Work Directive Change--principal references to 3.4.3, 10.1-10.2
Work, Neglected by Contractor 13.14
Work, Stopping by Contractor 15.5
Work, Stopping by Owner 15.1-15.4
Written Amendment--definition of 1
Written Amendment--principal references to 3.4.1, 10.1, 11.2. 12.1

SECTION 00700
GENERAL CONDITIONS

ARTICLE 1 - DEFINITIONS

Wherever used in these General Conditions or in the other Contract Documents the following terms have the meanings indicated which are applicable to both the singular and plural thereof:

Addenda - Written or graphic instruments issued prior to the opening of Bids which clarify, correct or change the bidding documents or the Contract Documents.

Agreement - The written agreement between OWNER and CONTRACTOR covering the Work to be performed; other Contract Documents are attached to the Agreement and made a part thereof as provided therein.

Application for Payment - The form accepted by ENGINEER which is to be used by CONTRACTOR in requesting progress for final payments and which is to include such supporting documentation as is required by the Contract Documents.

Bid - The offer or proposal of the bidder submitted on the prescribed form setting forth the prices for the Work to be performed.

Bonds - Bid, performance and payment bonds and other instruments of security.

Change Order - A document recommended by ENGINEER, which is signed by CONTRACTOR and OWNER and authorizes an addition, deletion or revision in the Work, or an adjustment in the Contract Price or the Contract Time, issued on or after the Effective Date of the Agreement.

Contract Documents - The Agreement, Addenda (which pertain to the Contract Documents), CONTRACTOR'S Bid (including documentation accompanying the Bid and any post-Bid documentation submitted prior to the Notice of Award) when attached as an exhibit to the Agreement, the Bonds, these General Conditions, the Supplementary Conditions, the Specifications and the Drawings as the same are more specifically identified in the Agreement, together with all amendments, modifications and supplements issued pursuant to paragraphs 3.4 and 3.5 on or after the Effective Date of the Agreement.

Contract Price - The moneys payable by OWNER to CONTRACTOR under the Contract Documents as stated in the Agreement (subject to the provisions of paragraph 11.9.1 in the case of Unit Price Work).

Contract Time - The number of days (computed as provided in paragraph 17.2) or the date stated in the Agreement for the completion of the Work.

CONTRACTOR - The person, firm or corporation with whom OWNER has entered into the Agreement.

Defective - An adjective which when modifying the word Work refers to Work that is unsatisfactory, faulty or deficient, or does not conform to the Contract Documents, or does not meet the requirements of any inspection, reference standard, test or approval referred to in the Contract Documents, or has been damaged prior to ENGINEER's recommendation of final payment (unless responsibility for the

protection thereof has been assumed by OWNER at Substantial Completion in accordance with paragraph 14.8 or 14.10).

Drawings - The drawings which show the character and scope of the Work to be performed and which have been prepared or approved by ENGINEER and are referred to in the Contract Documents.

Effective Date of the Agreement - The date indicated in the Agreement on which it becomes effective, but if no such date is indicated it means the date on which the Agreement is signed and delivered by the last of the two parties to sign and deliver.

ENGINEER - The person, firm or corporation named as such in the Agreement.

Field Order - A written order issued by ENGINEER which orders minor changes in the Work in accordance with paragraph 9.5 but which does not involve a change in the Contract Price or the Contract Time.

General Requirements - Sections of Division 1 of the Specifications.

Laws and Regulations; Laws or Regulations - Laws, rules, regulations, ordinances, codes and/or orders.

Notice of Award - The written notice by OWNER to the apparent successful bidder stating that upon compliance by the apparent successful bidder with the conditions precedent enumerated therein, within the time specified, OWNER will sign and deliver the Agreement.

Notice to Proceed - A written notice given by OWNER to CONTRACTOR (with a copy to ENGINEER) fixing the date on which the Contract Time will commence to run and on which CONTRACTOR shall start to perform CONTRACTOR's obligations under the Contract Documents.

OWNER - The public body or authority, corporation, association, firm or person with whom CONTRACTOR has entered into the Agreement and for whom the Work is to be provided.

Partial Utilization - Placing a portion of the Work in service for the purpose for which it is intended (or a related purpose) before reaching Substantial Completion for all the Work.

Project - The total construction of which the Work to be provided under the Contract Documents may be the whole, or a part as indicated elsewhere in the Contract Documents.

Resident Project Representative - The authorized representative of ENGINEER who is assigned to the site or any part thereof.

Shop Drawings - All drawings, diagrams, illustrations, schedules and other data which are specifically prepared by or for CONTRACTOR to illustrate some portion of the Work and all illustrations, brochures, standard schedules, performance charts, instructions, diagrams and other information prepared by a Supplier and submitted by CONTRACTOR to illustrate material or equipment for some portion of the Work.

Specifications - Those portions of the Contract Documents consisting of written technical descriptions of materials, equipment, construction systems, standards and workmanship as applied to the Work and certain administrative details applicable

thereto.

Subcontractor - An individual, firm or corporation having a direct contract with CONTRACTOR or with any other Subcontractor for the performance of a part of the Work at the site.

Substantial Completion - The Work (or a specified part thereof) has progressed to the point where, in the opinion of ENGINEER as evidenced by ENGINEER's definitive certificate of Substantial Completion, it is sufficiently complete, in accordance with the Contract Documents, so that the Work (or specified part) can be utilized for the purposes for which it is intended; or if there be no such certificate issued, when final payment is due in accordance with paragraph 14.13. The terms "substantially complete" and "substantially completed" as applied to any Work refer to Substantial Completion thereof.

Supplementary Conditions - The part of the Contract Documents which amends or supplements these General Conditions.

Supplier - A manufacturer, fabricator, supplier, distributor, materialman or vendor.

Underground Facilities - All pipelines, conduits, ducts, cables, wires, manholes, vaults, tanks tunnels or other such facilities or attachments, and any encasements containing such facilities which have been installed underground to furnish any of the following services or materials; electricity, gases, steam, liquid petroleum products, telephone or other communications, cable television, sewage and drainage removal, traffic or other control systems or water.

Unit Price Work - Work to be paid for on the basis of unit prices.

Work - The entire completed construction or the various separately identifiable parts thereof required to be furnished under the Contract Documents. Work is the result of performing services, furnishing labor and furnishing and incorporating materials and equipment into the construction, all as required by the Contract Documents.

Work Directive Change - A written directive to CONTRACTOR, issued on or after the Effective Date of the Agreement and signed by OWNER and recommended by ENGINEER, ordering and addition, deletion or revision in the Work, or responding to differing or unforeseen physical conditions under which the Work is to be performed as provided in paragraph 4.2 or 4.3 or to emergencies under paragraph 6.22. A Work Directive Change may not change the Contract Price or the Contract Time, but is evidence that the parties expect that the change directed or documented by a Work Directive Change will be incorporated in a subsequently issued Change Order following negotiations by the parties as to its effect, if any, on the Contract Price or Contract Time as provided in paragraph 10.2.

Written Amendment - A written amendment of the Contract Documents, signed by OWNER and CONTRACTOR on or after the Effective Date of the Agreement and normally dealing with the nonengineering or nontechnical rather than strictly Work-related aspects of the Contract Documents.

ARTICLE 2 - PRELIMINARY MATTERS

_____-
_____

Delivery of Bonds:

2.1 When CONTRACTOR delivers the executed Agreements to OWNER, CONTRACTOR shall also deliver to OWNER such Bonds as CONTRACTOR may be required to furnish in accordance with paragraph 5.1.

Copies of Documents:

2.2 OWNER shall furnish to CONTRACTOR up to ten copies (unless otherwise specified in the Supplementary Conditions) of the Contract Documents as are reasonably necessary for the execution of the Work. Additional Copies will be furnished, upon request, at the cost of reproduction.

Commencement of Contract Time; Notice to Proceed:

2.3 The Contract Time will commence to run on the thirtieth day after the Effective Date of the Agreement, or, if a Notice to Proceed is given, on the day indicated in the Notice to Proceed. A Notice to Proceed may be given at any time within thirty days after the Effective Date of the Agreement. In no event will the Contract Time commence to run later than the seventy-fifth day after the day of Bid opening or the thirtieth day after the Effective Date of the Agreement, whichever date is earlier.

Starting the Project:

2.4 CONTRACTOR shall start to perform the Work on the date when the Contract Time commences to run, but no Work shall be done at the site prior to the date on which the Contract Time commences to run.

Before Starting Construction:

2.5 Before undertaking each part of the Work, CONTRACTOR shall carefully study and compare the Contract Documents and check and verify pertinent figures shown thereon and all applicable field measurements. CONTRACTOR shall promptly report in writing to ENGINEER any conflict, error or discrepancy which CONTRACTOR may discover and shall obtain a written interpretation or clarification from ENGINEER before proceeding with any Work affected thereby; however, CONTRACTOR shall not be liable to OWNER or ENGINEER for failure to report any conflict, error or discrepancy in the Contract Documents, unless CONTRACTOR had actual knowledge thereof or should reasonably have known thereof.

2.6 Within ten days after the Effective Date of the Agreement (unless otherwise specified in the General Requirements), CONTRACTOR shall submit to ENGINEER for review:

2.6.1 a preliminary Progress Schedule;

2.6.2 a preliminary Schedule of Submittals; and

2.6.3 a preliminary Schedule of Values for all of the Work which includes quantities and prices of items which when added together equal the Contract Price and subdivides the Work into component parts in sufficient detail to serve as the basis for progress payments during performance of the Work. Such prices will include an appropriate amount of

overhead and profit applicable to each item of Work.

2.7 Before any Work at the site is started, CONTRACTOR shall deliver to OWNER, with a copy to ENGINEER, certificates (and other evidence of insurance requested by OWNER) which CONTRACTOR is required to purchase and maintain in accordance with paragraphs 5.3 and 5.4., and OWNER shall deliver to CONTRACTOR certificates (and other evidence of insurance requested by CONTRACTOR) which OWNER is required to purchase and maintain in accordance with paragraphs 5.6 and 5.7.

Preconstruction Conference:

Initial Acceptance of Schedules:

2.8 At least 10 days before submission of the first Application for Payment a conference attended by Contractor, Engineer, and others as appropriate will be held to review for acceptability to Engineer as provided below the schedules submitted in accordance with Paragraph 2.6. Contractor shall have an additional 10 days to make corrections and adjustments and to complete and resubmit the schedules. No progress payment shall be made to Contractor until acceptable schedules are submitted to Engineer.

2.8.1 The Progress Schedule will be acceptable to Engineer if it provides an orderly progression of the Work to completion within the Contract Times. Such acceptance will not impose on Engineer responsibility for the Progress Schedule, for sequencing, scheduling, or progress of the Work nor interfere with or relieve Contractor from Contractor's full responsibility therefor.

2.8.2 Contractor's Schedule of Submittals will be acceptable to Engineer if it provides a workable arrangement for reviewing and processing the required submittals.

2.8.3 Contractor's Schedule of Values will be acceptable to Engineer as to form and substance if it provides a reasonable allocation of the Contract Price to component parts of the Work.

ARTICLE 3 - CONTRACT DOCUMENTS: INTENT, AMENDING, REUSE

_____

Intent:

3.1 The Contract Documents comprise the entire agreement between OWNER and CONTRACTOR concerning the Work. The Contract Documents are complementary; what is called for by one is as binding as if called for by all. The Contract Documents will be construed in accordance with the law of the place of the Project.

3.2 It is the intent of the Contract Documents to describe a functionally complete Project (or part thereof) to be constructed in accordance with the Contract Documents. Any Work, materials or equipment that may reasonably be inferred from the Contract Documents as being required to produce the intended result will be supplied whether or not specifically called for. When words which have a well-known

technical or trade meaning are used to describe Work, materials or equipment such words shall be interpreted in accordance with that meaning. Reference to standard specifications, manuals or codes of any technical society, organization or association, or to the Laws or Regulations of any governmental authority, whether such reference be specific or by implication, shall mean the latest standard specification, manual, code or Laws or Regulations in effect at the time of opening of Bids (or, on the Effective Date of the Agreement if there were no Bids), except as may be otherwise specifically stated. However, no provision of any referenced standard specification, manual or code (whether or not specifically incorporated by reference in the Contract Documents) shall be effective to change the duties and responsibilities of OWNER, CONTRACTOR or ENGINEER, or any of their consultants, agents or employees from those set forth in the Contract Documents, nor shall it be effective to assign to ENGINEER, or any of ENGINEER's consultants, agents or employees, any duty or authority to supervise or direct the furnishing or performance of the Work or any duty or authority to undertake responsibility contrary to the provisions of paragraph 9.15 or 9.16. Clarifications and interpretations of the Contract Documents shall be issued by ENGINEER as provided in paragraph 9.4.

3.3 If, during the performance of the Work, CONTRACTOR finds a conflict, error or discrepancy in the Contract Documents, CONTRACTOR shall so report to ENGINEER in writing at once and before proceeding with the Work affected thereby shall obtain a written interpretation or clarification from ENGINEER; however, CONTRACTOR shall not be liable to OWNER or ENGINEER for failure to report any conflict, error or discrepancy in the Contract Documents unless CONTRACTOR had actual knowledge thereof or should reasonable have known thereof.

Amending and Supplementing Contract Documents:

3.4 The Contract Documents may be amended to provide for additions, deletions and revisions in the Work or to modify the terms and conditions thereof in one or more of the following ways:

3.4.1 a formal Written Amendment,

3.4.2 a Change Order (pursuant to paragraph 10.4), or

3.4.3 a Work Directive Change (pursuant to paragraph 10.1).

As indicated in paragraphs 11.2 and 12.1, Contract Price and Contact Time may only be changed by a Change Order or a Written Amendment.

3.5 In addition, the requirements of the Contract Documents may be supplemented, and minor variations and deviations in the Work may be authorized, in one or more of the followings ways:

3.5.1 a Field Order (pursuant to paragraph 9.5),

3.5.2 ENGINEER's approval of a Shop Drawing or sample (pursuant to paragraphs 6.26 and 6.27), or

3.5.3 ENGINEER's written interpretation or clarification (pursuant to paragraph 9.4).

Reuse of Documents:

3.6 Neither CONTRACTOR nor any Subcontractor or Supplier or other person or organization performing or furnishing any of the Work under a direct or indirect contract with OWNER shall have or acquire any title to or ownership rights in any of the Drawings, Specifications or other documents (or copies of any thereof) prepared by or bearing the seal of ENGINEER; and they shall not reuse any of them on extensions of the Project or any other project without written consent of OWNER and ENGINEER and specific written verification or adaptation by ENGINEER.

ARTICLE 4 - AVAILABILITY OF LANDS; PHYSICAL CONDITIONS; REFERENCE POINTS

_____

Availability of Lands:

4.1 OWNER shall furnish, as indicated in the Contract Documents, the lands upon which the Work is to be performed, rights-of-way and easements for access thereto, and such other lands which are designated for the use of CONTRACTOR. Easements for permanent structures or permanent changes in existing facilities will be obtained and paid for by OWNER, unless otherwise provided in the Contract Documents. If CONTRACTOR believes that any delay in OWNER's furnishing these lands, rights-of-way or easements entitles CONTRACTOR to an extension of the Contract Time, CONTRACTOR may make a claim therefore as provided in Article 12. CONTRACTOR shall provide for all additional lands and access thereto that may be required for temporary construction facilities or storage of materials and equipment.

Physical Conditions:

4.2.1 *Explorations and Reports:* Reference is made to the Supplementary Conditions for identification of those reports of explorations and tests of subsurface conditions at the site that have been utilized by ENGINEER in preparation of the Contract Documents. CONTRACTOR may rely upon the accuracy of the technical data contained in such reports, but not upon nontechnical data, interpretations or opinions contained therein or for the completeness thereof for CONTRACTOR's purposes. Except as indicated in the immediately preceding sentence and in paragraph 4.2.6, CONTRACTOR shall have full responsibility with respect to subsurface conditions at the site.

4.2.2 *Existing Structures:* Reference is made to the Supplementary Conditions for identification of those drawings of physical conditions in or relating to existing surface and subsurface structures (except Underground Facilities referred to in paragraph 4.3) which are at our contiguous to the site that have been utilized by ENGINEER in preparation of the Contract Documents. CONTRACTOR may rely upon the accuracy of the technical data contained in such drawings, but not for the completeness thereof for CONTRACTOR's purposes. Except as indicated in the immediately preceding sentence and in paragraph 4.2.6, CONTRACTOR shall have full responsibility with respect to physical conditions in or relating to such structures.

4.2.3 *Report of Differing Conditions:* If CONTRACTOR believes that:

4.2.3.1 any technical data on which CONTRACTOR is entitled to rely as provided in paragraphs 4.2.1 and 4.2.2 is inaccurate, or

4.2.3.2 any physical condition uncovered or revealed at the site differs materially from that indicated, reflected or referred to in the Contract Documents,

CONTRACTOR shall, promptly after becoming aware thereof and before performing any Work in connection therewith (except in an emergency as permitted by paragraph 6.22), notify OWNER and ENGINEER in writing about the inaccuracy or difference.

4.2.4 *ENGINEER's Review:* ENGINEER will promptly review the pertinent conditions, determine the necessity of obtaining additional explorations or tests with respect thereto and advise OWNER in Writing (with a copy to CONTRACTOR) of ENGINEER's findings and conclusions.

4.2.5 *Possible Document Change:* IF ENGINEER concludes that there is a material error in the Contract Documents or that because of newly discovered conditions a change in the Contract Documents is required, a Work Directive Change or a change Order will be issued as provided in Article 10 to reflect and document the consequences of the inaccuracy or difference.

4.2.6 *Possible Price and Time Adjustments:* In each such case, an increase or decrease in the Contract Price or an extension or shortening of the Contract Time, or any combination thereof, will be allowable to the extent that they are attributable to any such inaccuracy of difference. If OWNER and CONTRACTOR are unable to agree as to the amount or length thereof, a claim may be made therefore as provided in Articles 11 and 12.

Physical Conditions - Underground Facilities:

4.3.1 *Shown or Indicated:* The information and data shown or indicated in the Contract Documents with respect to existing Underground Facilities at or contiguous to the site is based on information and data furnished to OWNER or ENGINEER by the owners of such Underground Facilities or by others. Unless it is otherwise expressly provided in the Supplementary Conditions:

4.3.1.1 OWNER and ENGINEER shall not be responsible for the accuracy or completeness or any such information or data; and,

4.3.1.2 CONTRACTOR shall have full responsibility for reviewing and checking all such information and data, for locating all Underground Facilities shown or indicated in the Contract Documents, for coordination of the Work with the owners of such Underground Facilities during construction, for the safety and protection thereof as provided in paragraph 6.20 and repairing any damage thereto resulting from the Work, the cost of all of which will be considered as having been included in the Contract Price.

4.3.2 *Not Shown or Indicated.* If an Underground Facility is uncovered or revealed at or contiguous to the site which was not shown or indicated in the Contract Documents and which CONTRACTOR could not reasonably have been expected to be aware of,

CONTRACTOR shall, promptly after becoming aware thereof and before performing any Work affected thereby (except in an emergency as permitted by paragraph 6.22), identify the owner of such Underground Facility and give written notice thereof to that owner and to OWNER and ENGINEER. ENGINEER will promptly review the Underground Facility to determine the extent to which the Contract Documents should be modified to reflect and document the consequences of the existence of the Underground Facility, and the Contract Documents will be amended or supplemented to the extent necessary. During such time, CONTRACTOR shall be responsible for the safety and protection of such Underground Facility as provided in paragraph 6.20. CONTRACTOR shall be allowed an increase in the Contract Price or an extension of the Contract Time, or both, to the extent that they are attributable to the extent to the existence of any Underground Facility that was not shown or indicated in the Contract Documents and which CONTRACTOR could not reasonably have been expected to be aware of. If the parties are unable to agree as to the amount or length thereof, CONTRACTOR may make a claim therefore as provided in Articles 11 and 12.

Reference Points:

4.4 OWNER shall provide engineering surveys to establish reference points for construction which in ENGINEER's judgment are necessary to enable CONTRACTOR to proceed with the Work. CONTRACTOR shall be responsible for laying out the Work (unless otherwise specified in the General Requirements), shall protect and preserve the established reference points and shall make no changes or relocations without the prior written approval of OWNER. CONTRACTOR shall report to ENGINEER whenever an reference point is lost or destroyed or requires relocation because of necessary changes in grades or locations, and shall be responsible for the accurate replacement or relocation of such reference points by professionally qualified personnel.

ARTICLE 5 - BONDS AND INSURANCE

_____

Performance and Other Bonds:

5.1 CONTRACTOR shall furnish performance and payment Bonds, each in an amount at least equal to the Contract Price as security for the faithful performance and payment of all CONTRACTOR's obligations under the Contract Documents. These Bonds shall remain in effect at least until one year after the date when final payment becomes due, except as otherwise provided by Law or Regulation or by the Contract Documents. CONTRACTOR shall also furnish such other Bonds as are required by the Supplementary Conditions. All Bonds shall be in the forms prescribed by Law or Regulation or by the Contract Documents and be executed by such sureties as are named in the current list of "Companies Holding Certificates of Authority as Acceptable Sureties on Federal Bonds and as Acceptable Reinsuring Companies" as published in Circular 570 (amended) by the Audit Staff Bureau of Accounts, U.S. Treasury Department. All Bonds signed by an agent must be accompanied by a certified copy of the authority to act.

5.2 If the surety on any Bond furnished by CONTRACTOR is declared a bankrupt or becomes insolvent or its right to do business

is terminated in any state where any part of the Project is located or it ceases to meet the requirements of paragraph 5.1, CONTRACTOR shall within five days thereafter substitute another Bond and Surety, both of which must be acceptable to OWNER.

Contractor's Liability Insurance:

5.3 CONTRACTOR shall purchase and maintain such comprehensive general liability and other insurance as is appropriate for the Work being performed and furnished and as will provide protection from claims set forth below which may arise out of or result from CONTRACTOR's performance and furnishing of the Work and CONTRACTOR's other obligations under the Contract Documents, whether it is to be performed or furnished by CONTRACTOR, by any Subcontractor, by anyone directly or indirectly employed by any of them to perform or furnish any of the Work, or by anyone for whose acts any of them may be liable.

5.3.1 Claims under workers' or workmen's compensation, disability benefits and other similar employee benefit acts;

5.3.2 Claims for damages because of bodily injury occupational sickness or disease, or death on CONTRACTOR's employees;

5.3.3 Claims for damages because of bodily injury, sickness or disease, or death of any person other than CONTRACTOR's employees;

5.3.4 Claims for damages insured by personal injury liability coverage which are sustained (a) by any person as a result of an offense directly or indirectly related to the employment of such person by CONTRACTOR, or (b) by any other person for any other reason;

5.3.5 Claims for damages, other than to the Work itself, because of injury to or destruction of tangible property wherever located, including loss of use resulting there from;

5.3.6 Claims arising our of operation of Laws or Regulations for damages because of bodily injury or death of any person or for damage to property; and

5.3.7 Claims for damages because of bodily injury or death of any person or property damage arising out of the ownership, maintenance or use of any motor vehicle.

The insurance required by this paragraph 5.3 shall include the specific coverages and be written for not less than the limits of liability and coverages provided in the Supplementary Conditions, or required by law, whichever is greater. The comprehensive general liability insurance shall include completed operations insurance. All of the policies of insurance so required to be purchased and maintained (or the certificates or other evidence thereof) shall contain a provision or endorsement that the coverage afforded will not be canceled, materially changed or renewal refused until at least thirty days' prior written notice has been given to OWNER and ENGINEER by certified mail. All such insurance shall remain in effect until final payment and at all times

thereafter when CONTRACTOR may be correcting, removing or replacing *defective* Work in accordance with paragraph 13.12. In addition, CONTRACTOR shall maintain such completed operations insurance for at least two years after final payment and furnish OWNER and with evidence of continuation of such insurance at final payment and one year thereafter.

Contractual Liability Insurance:

5.4 The comprehensive general liability insurance required by paragraph 5.3 will include contractual liability insurance applicable to CONTRACTOR's obligations under paragraphs 6.30 and 6.31.

Owner's Liability Insurance:

5.5 OWNER shall be responsible for purchasing and maintaining OWNER's own liability insurance and, at OWNER's option, may purchase and maintain such insurance as will protect OWNER against claims which may arise from operations under the Contract Documents.

Property Insurance:

5.6 Unless otherwise provided in the Supplementary Conditions, CONTRACTOR shall purchase and maintain property insurance upon the Work at the site to the full insurable value thereof (subject to such deductible amounts as may be provided in the Supplementary Conditions or required by Laws and Regulations). This insurance shall include the interests of OWNER, CONTRACTOR, Subcontractors, ENGINEER and ENGINEER's consultants in the Work, all of whom shall be listed as insured or additional insured parties, shall insure against the perils of fire and extended coverage and shall include "all risk" insurance for physical loss and damage including theft, vandalism and malicious mischief, collapse and water damage, and such other perils as may be provided in the Supplementary Conditions, and shall include damages, losses and expenses arising out of or resulting from any insured loss or incurred in the repair or replacement of any insured property (including but not limited to fees and charges of engineers, architects, attorneys and other professionals). If not covered under the "all risk" insurance or otherwise provided in the Supplementary Conditions, CONTRACTOR shall purchase and maintain similar property insurance on portions of the Work stored on and off the site or in transit when such portions of the Work are to be included in an Application for Payment.

5.7 OWNER shall purchase and maintain such boiler and machinery insurance or additional property insurance as may be required by the Supplementary Conditions or Laws and Regulations which will include the interests of OWNER, CONTRACTOR, Subcontractors, ENGINEER and ENGINEER's consultants in the Work, all of whom shall be listed as insured or additional insured parties.

5.8 All the policies of insurance (or the certificates or other evidence thereof) required to be purchased and maintained by CONTRACTOR in accordance with paragraphs 5.6 and 5.7 will contain a provision or endorsement that the coverage afforded will not be canceled or materially changed or renewal refused until at least thirty days' prior written notice has been given to OWNER by certified mail and will contain waiver provisions in accordance with para

graph 5.11.2.

5.9 OWNER shall not be responsible for purchasing and maintaining any property insurance to protect the interests of CONTRACTOR, Subcontractors or others in the Work to the extent of any deductible amounts that are provided in the Supplementary Conditions. The risk of loss within the deductible amount, will be borne by CONTRACTOR, Subcontractor or others suffering any such loss and if any of them wishes property insurance coverage within the limits of such amounts, each may purchase and maintain it at the purchaser's own expense.

5.10 If OWNER requests in writing that other special insurance be included in the property insurance policy, CONTRACTOR shall, if possible, include such insurance, and the cost thereof will be charged to CONTRACTOR by appropriate Change Order or Written Amendment. Prior to commencement of the Work at the site, CONTRACTOR shall in writing advise OWNER whether or not such other insurance has been procured by CONTRACTOR.

Waiver of Rights:

5.11.1 OWNER and CONTRACTOR waive all rights against each other for all losses and damages caused by any of the perils covered by the policies of insurance provided in response to paragraphs 5.6 and 5.7 and any other property insurance applicable to the Work, and also waive all such rights against the Subcontractors, ENGINEER, ENGINEER's consultants and all other parties names as insured in such policies for losses and damages so caused. As required by paragraph 6.11, each subcontract between CONTRACTOR and a Subcontractor will contain similar waiver provisions by the Subcontractor in favor of OWNER, CONTRACTOR, ENGINEER, ENGINEER's consultants and all other parties named as insured. None of the above waivers shall extend to the rights that any of the insured parties may have to the proceeds of insurance held by OWNER as trustee or otherwise payable under any policy so issued.

5.11.2 OWNER and CONTRACTOR intend that any policies provided in response to paragraphs 5.6 and 5.7 shall protect all of the parties insured and provide primary coverage for all losses and damages caused by the perils covered thereby. Accordingly, all such policies shall contain provisions to the effect that in the event of payment of any loss or damage the insurer will have no rights of recovery against any of the parties named as insureds or additional insureds, and if the insurers require separate waiver forms to be signed by ENGINEER or ENGINEER's consultant OWNER will obtain the same, and if such waiver forms are required of any Subcontractor, CONTRACTOR will obtain the same.

Receipt and Application of Proceeds:

5.12 Any insured loss under the policies of insurance required by paragraphs 5.6 and 5.7 will be adjusted with OWNER and made payable to OWNER as trustee for the insureds, as their interests may appear, subject to the requirements of any applicable mortgage clause and of paragraph 5.13. OWNER shall deposit in a separate account any money so received, and shall distribute it in accordance with such agreement as the parties in interest may reach. If no other special agreement is reached the damaged Work shall be repaired or replaced, the

moneys so received applied on account thereof and the Work and the cost thereof covered by an appropriate Change Order or Written Amendment.

5.13 OWNER as trustee shall have power to adjust and settle any loss with the insurers unless one of the parties in interest shall object in writing within fifteen days after the occurrence of loss to OWNER's exercise of this power. If such objection be made, OWNER as trustee shall make settlement with the insurers in accordance with such agreement as the parties in interest may reach. If required in writing by any party in interest, OWNER as trustee shall, upon the occurrence of an insured loss, give bond for the proper performance of such duties.

Acceptance of Insurance:

5.14 If OWNER has any objection to the coverage afforded by or other provisions of the insurance required to be purchased and maintained by CONTRACTOR in accordance with paragraphs 5.3 and 5.4 on the basis of its not complying with the Contract Documents, OWNER shall notify CONTRACTOR in writing thereof within ten days of the date of delivery of such certificates to OWNER in accordance with paragraph 2.7. If CONTRACTOR has any objection to the coverage afforded by or other provisions of the policies of insurance required to be purchased and maintained by OWNER in accordance with paragraphs 5.6 and 5.7 on the basis of their not complying with the Contract Documents, CONTRACTOR shall notify OWNER in writing thereof within ten days of the date of delivery of such certificates to CONTRACTOR in accordance with paragraph 2.7 OWNER and CONTRACTOR shall each provide to the other such additional information in respect of insurance provided by each as the other may reasonably request. Failure by OWNER or CONTRACTOR to give any such notice of objection within the time provided shall constitute acceptance of such insurance purchased by the other as complying with the Contract Documents.

Partial Utilization - Property Insurance:

5.15 If OWNER finds it necessary to occupy or use a portion or portions of the Work prior to Substantial Completion of all the Work, such use or occupancy may be accomplished in accordance with paragraph 14.10; provided that no such use or occupancy shall commence before the insurers providing the property insurance have acknowledge notice thereof and in writing effected the changes in coverage necessitated thereby. The insurers providing the property insurance shall consent by endorsement on the policy or policies, but the property insurance shall not be canceled or lapse on account of any such partial use or occupancy.

ARTICLE 6 - CONTRACTOR'S RESPONSIBILITIES

_____

Supervision and Superintendence:

6.1 CONTRACTOR shall supervise and direct the Work competently and efficiently, devoting such attention thereto and applying such skills and expertise as may be necessary to perform the Work in accordance with the Contract Documents. CONTRACTOR shall be solely responsible for the means, methods, techniques, sequences and procedures of construction, but CONTRACTOR shall not be

responsible for the negligence of others in the design or selection of a specific means, method, technique, sequence or procedure of construction which is indicated in and required by the Contract Documents. CONTRACTOR shall be responsible to see that the finished Work complies accurately with the Contract Documents.

6.2 CONTRACTOR shall keep on the Work at all times during its progress a competent resident superintendent, who shall not be replaced without written notice to OWNER and ENGINEER except under extraordinary circumstances. The superintendent will be CONTRACTOR's representative at the site and shall have authority to act on behalf of CONTRACTOR. All communications given to the superintendent shall be as binding as if given to CONTRACTOR.

Labor, Materials and Equipment:

6.3 CONTRACTOR shall provide competent, suitably qualified personnel to survey and lay out the Work and perform construction as required by the Contract Documents. CONTRACTOR shall at all times maintain good discipline and order at the site. Except in connection with the safety or protection of persons or the Work or property at the site or adjacent thereto, and except as otherwise indicated in the Contract Documents, all Work at the site shall be performed during regular working hours, and CONTRACTOR will not permit overtime work or the performance of Work on Saturday, Sunday or any legal holiday without OWNER's written consent give after prior written notice to ENGINEER.

6.4 Unless otherwise specified in the General Requirements, CONTRACTOR shall furnish and assume full responsibility for all materials, equipment, labor, transportation, construction equipment and machinery, tools, appliances, fuel, power, light, heat, telephone, water sanitary facilities, temporary facilities and all other facilities and incidentals necessary for the furnishing, performance, testing, start-up and completion of the Work.

6.5 All materials and equipment shall be of good quality and new, except as otherwise provided in the Contract Documents. If required by ENGINEER, CONTRACTOR shall furnish satisfactory evidence (including reports of required tests) as to the kind and quality of materials and equipment. All materials and equipment shall be applied, installed, connected, erected, used, cleaned and conditioned in accordance with the instruction of the applicable Supplier except as otherwise provided in the Contract Documents; but no provision of any such instructions will be effective to assign to ENGINEER, or any of ENGINEER's consultants, agents or employees, any duty or authority to supervise or direct the furnishing or performance of the Work or any duty or authority to undertake responsibility contrary to the provisions of paragraph 9.15 or 9.16.

Adjusting Progress Schedule:

6.6 CONTRACTOR shall submit to ENGINEER for acceptance (to the extent indicated in paragraph 2.9) adjustments in the progress schedule to reflect the impact thereon of new developments; these will conform generally to the progress schedule then in effect and additionally will comply with any provisions of the General Requirements applicable thereto.

Substitutes or "Or-Equal" Items:

6.7.1 Whenever materials or equipment are specified or described in the Contract Documents by using the name of a proprietary item or the name of a particular Supplier the naming of the item is intended to establish the type, function and quality required. In the case where the name is followed by words indicating that substitutions/ "or equals" are permitted, materials or equipment of other Suppliers may be accepted by ENGINEER if sufficient information is submitted by BIDDER to allow ENGINEER to determine that the material or equipment proposed is equivalent or equal to that named. The procedure for review by ENGINEER will include the following as supplemented in the General Requirements. Requests for review of substitute/ "or-equal" items of material and equipment will not be accepted by ENGINEER from anyone other than BIDDER. If BIDDER wishes to furnish or use a substitute/ "or-equal" item of material or equipment, BIDDER shall make written application to ENGINEER for acceptance thereof, certifying that the proposed substitute/ "or-equal" or will perform adequately the functions and achieve the results called for by the general design, be similar and of equal substance to that specified and be suited to the same use as that specified. The application will state that the evaluation and acceptance of the proposed substitute/ "or-equal" item will not prejudice BIDDER'S achievement of Substantial Completion on time, whether or not acceptance of the substitute/ "or-equal" item for use in the Work will require a change in any of the Contract Documents (or in the provisions of any other direct contract with OWNER for work on the Project) to adapt the design to the proposed item and whether or not incorporation or use of the item in connection with the Work is subject to payment of any license fee or royalty. All variations of the proposed substitute/ "or-equal" item from that specified will be identified in the application and available maintenance repair and replacement service will be indicated. The application will also contain an itemized estimate of all costs that will result directly or indirectly from acceptance of such item, including costs for redesign and claims of other contractors affected by the resulting change, all of which shall be considered by ENGINEER in evaluating the proposed substitute/ "or-equal" item. ENGINEER may require BIDDER to furnish at BIDDER'S expense additional data about the proposed substitute/ "or-equal" item.

6.7.2 If a specific means, method, technique, sequence or procedure of construction is indicated in or required by the Contract Documents, BIDDER may furnish or utilize a substitute/ "or-equal" means, method, sequence, technique or procedure of construction acceptable to ENGINEER, if BIDDER submits sufficient information to allow ENGINEER to determine that the substitute/ "or-equal" item proposed is equivalent to that indicated or required by the Contract Documents. The procedure for review by ENGINEER will be similar to that provided in paragraph 6.7.1 as applied by ENGINEER and as may be supplemented in the General Requirements.

6.7.3 ENGINEER will be allowed a reasonable time within which to evaluate each proposed substitute/ "or equal" item. ENGINEER will be the sole judge of accept-ability, and no item will be ordered, installed or utilized without ENGINEER's prior written acceptance which will be evidenced by either a Change Order or an approved Shop

Drawing. OWNER may require BIDDER to furnish at BIDDER's expense a special performance guarantee or other surety with respect to any substitute/ "or-equal" item. ENGINEER will record time required by ENGINEER and ENGINEER's consultants in evaluating items proposed by BIDDER and in making changes in the Contract Documents occasioned thereby. Whether or not ENGINEER accepts a proposed substitute/ "or-equal" item, BIDDER shall reimburse OWNER for the charges of ENGINEER and ENGINEER's consultants for evaluating each proposed item.

Concerning Subcontractors, Suppliers and Others:

6.8.1 CONTRACTOR shall not employ any Subcontractor, Supplier or other person or organization (including those acceptable to OWNER and ENGINEER as indicated in paragraph 6.8.2), whether initially or as a substitute, against whom OWNER or ENGINEER may have reasonable objection. CONTRACTOR shall not be required to employ any Subcontractor, Supplier or other person or organization to furnish or perform any of the Work against whom CONTRACTOR has reasonable objection.

6.8.2 If the Supplementary Conditions require the identity of certain Subcontractors, Suppliers or other persons or organizations (including those who are to furnish the principal items of materials and equipment) to be submitted to OWNER in advance of the specified date prior to the Effective Date of the Agreement for acceptance by OWNER and ENGINEER and if CONTRACTOR has submitted a list thereof in accordance with the Supplementary Conditions, OWNER's or ENGINEER's acceptance (either in writing or by failing to make written objection thereto by the date indicated for acceptance or objection in the bidding documents or the Contract Documents) of any such Subcontractor, Supplier or other person or organization so identified may be revoked on the basis of reasonable objection after due investigation, in which case CONTRACTOR shall submit an acceptable substitute/ "or-equal" item, the Contract Price will be increased by the difference in the cost occasioned by such substitution and an appropriate Change Order will be issued or Written Amendment signed. No acceptance by OWNER or ENGINEER of any such Subcontractor, Supplier or other person or organization shall constitute a waiver of any right of OWNER or ENGINEER to reject *defective* Work.

6.9 CONTRACTOR shall be fully responsible to OWNER and ENGINEER for all acts and omissions of the Subcontractors, Suppliers and other persons and organization performing or furnishing any of the Work under a direct or indirect contract with CONTRACTOR just as CONTRACTOR is responsible for CONTRACTOR's own acts and omissions. Nothing in the Contract Documents shall create any contractual relationship between OWNER or ENGINEER and any such Subcontractor, Supplier or other person or organization, nor shall it create any obligation on the part of OWNER or ENGINEER to pay or to see to the payment of any moneys due any such Subcontractor, Supplier or other person or organization except as may other wise be required by Laws and Regulations.

6.10 The divisions and sections of the Specifications and the identifications of any Drawings shall not control CONTRACTOR in dividing the Work among Subcontractors or Suppliers or delineating the Work to be

performed by any specific trade.

6.11 All Work performed for CONTRACTOR by a Subcontractor will be pursuant to an appropriate agreement between CONTRACTOR and the Subcontractor which specifically binds the Subcontractor to the applicable terms and conditions of the Contract Documents for the benefit of OWNER and ENGINEER and contains waiver provisions as required by paragraph 5.11. CONTRACTOR shall pay each Subcontractor a just share of any insurance moneys received by CONTRACTOR on account of losses under policies issued pursuant to paragraphs 5.6 and 5.7.

Patent Fees and Royalties:

6.12 CONTRACTOR shall pay all license fees and royalties and assume all costs incident to the use in the performance of the Work or the incorporation in the Work of any invention, design, process, product or device which is the subject of patent rights or copyrights held by others. If a particular invention, design process, product or device is specified in the Contract Documents for use in the performance of the Work and if to the actual knowledge of OWNER or ENGINEER its use is subject to patent rights or copyrights calling for the payment of any license fee or royalty to others, the existence of such rights shall be disclosed by OWNER in the Contract Documents. CONTRACTOR shall indemnify and hold harmless OWNER and ENGINEER and anyone directly or indirectly employed by either of them from and against all claims, damages, losses and expenses (including attorneys' fees and court and arbitration costs) arising our of any infringement of patent rights or copyrights incident to the use in the performance of the Work or resulting from the incorporation in the Work of any invention, design, process, product or device not specified in the Contract Documents, and shall defend all such claims in connection with any alleged infringement of such rights.

Permits:

6.13 Unless otherwise provided in the Supplementary Conditions, CONTRACTOR shall obtain and pay for all construction permits and licenses. OWNER shall assist CONTRACTOR, when necessary, in obtaining such permits and licenses. CONTRACTOR shall pay all governmental charges and inspection fees necessary for the prosecution of the Work, which are applicable at the time of opening the Bids, or if there are no Bids on the Effective Date of the Agreement. CONTRACTOR shall pay all charges of utility owners for connections to the Work, and OWNER shall pay all charges of such utility owners for capital costs related thereto such as plant investment fees.

Laws and Regulations:

6.14.1 CONTRACTOR shall give all notices and comply with all Laws and Regulations applicable to furnishing and performance of the Work. Except where otherwise expressly required by applicable Laws and Regulations, neither OWNER nor ENGINEER shall be responsible for monitoring CONTRACTOR's compliance with any Laws or Regulations.

6.14.2 If CONTRACTOR observes that the Specifications or Drawings are at variance with any Laws or Regulations, CONTRACTOR shall give ENGINEER prompt written notice thereof, and any necessary changes will be authorized by one of the methods indicated

in paragraph 3.4. If CONTRACTOR performs any Work knowing or having reason to know that it is contrary to such Laws or Regulations, and without such notice to ENGINEER, CONTRACTOR shall bear all costs arising there from; however, it shall not be CONTRACTOR's primary responsibility to make certain that the Specifications and Drawings are in accordance with such Laws and Regulations.

Taxes:

6.15 CONTRACTOR shall pay all sales, consumer, use and other similar taxes required to be paid by CONTRACTOR in accordance with the Laws and Regulations of the place of the Project which are applicable during the performance of the Work.

Use of Premises:

6.16 CONTRACTOR shall confine construction equipment, the storage of materials and equipment and the operations of workers to the Project site and land and areas identified in and permitted by the Contract Documents and other land and areas permitted by Laws and Regulations, rights-of-way, permits and easements, and shall not unreasonably encumber the premises which construction equipment or other materials or equipment. CONTRACTOR shall assume full responsibility for any damage to any such land or area, or to the owner or occupant thereof or of any land or areas contiguous thereto, resulting from the performance of the Work. Should any claim be made against OWNER or ENGINEER by any such owner or occupant because of the performance of the Work, CONTRACTOR shall promptly attempt to settle with such other party by agreement or otherwise resolve the claim by arbitration or at law. CONTRACTOR shall, to the fullest extent permitted by Laws and Regulations, indemnify and hold OWNER and ENGINEER harmless from and against all claims damages, losses and expenses (including, but not limited to fees or engineers, architects, attorneys and other professionals and court and arbitration costs) arising directly, indirectly or consequentially out of any action, legal or equitable, brought by any such other party against OWNER or ENGINEER to the extent based on a claim arising out of CONTRACTOR's performance of the Work.

6.17 During the progress of the Work, CONTRACTOR shall keep the premises free from accumulations of waste materials, rubbish and other debris resulting from the Work. At the completion of the Work CONTRACTOR shall remove all waste materials, rubbish and debris from and about the premises as well as all tools, appliances, construction equipment and machinery, and surplus materials, and shall leave the site clean and ready for occupancy by OWNER. CONTRACTOR shall restore to original condition all property not designated for alteration by the Contract Documents.

6.18 CONTRACTOR shall not load nor permit any part of any structure to be loaded in any manner that will endanger the structure, nor shall CONTRACTOR subject any part of the Work or adjacent property to stresses or pressures that will endanger it.

Record Documents:

6.19 CONTRACTOR shall maintain in a safe place at the site one record copy of all Drawings, Specifications, Addenda, Written Amendments, Change Orders, Work Directive

Changes, Field Orders and written interpretations and clarifications (issued pursuant to paragraph 9.4) in good order and annotated to show all changes made during construction. These record documents together with all approved samples and a counterpart of all approved Shop Drawings will be available to ENGINEER for reference. Upon completion of the Work, these record documents, samples and Shop Drawings will be delivered to ENGINEER for OWNER.

Safety and Protection:

6.20 CONTRACTOR shall be responsible for initiating, maintaining and supervising all safety precautions and programs in connection with the Work. CONTRACTOR shall take all necessary precautions for the safety of, and shall provide the necessary protection to prevent damage, injury or loss to:

6.20.1 all employees on the Work and other persons and organizations who may be affected thereby:

6.20.2 all the Work and materials and equipment to be incorporated therein, whether in storage on or off the site; and

6.20.3 other property at the site or adjacent thereto, including trees, shrubs, lawns, walks, pavements, roadways, structures, utilities and Underground Facilities not designated for removal, relocation or replacement in the course of construction.

CONTRACTOR shall comply with all applicable Laws and Regulations of any public body (Including OSHA) having jurisdiction for the safety of persons or property or to protect them from damage, injury or loss; and shall erect and maintain all necessary safeguards for such safety and protection. CONTRACTOR shall notify owners of adjacent property and of Underground Facilities and utility owners when prosecution of the Work may affect them, and shall cooperate with them in the protection, removal, relocation and replacement of their property. All damage, injury or loss to any property referred to in paragraph 6.20.2 or 6.20.3 caused, directly or indirectly, in whole or in part, by CONTRACTOR, any Subcontractor, Supplier or any other person or organization directly or indirectly employed by any of them to perform or furnish any of the Work or anyone for whose acts any of them may be liable, shall be remedied by CONTRACTOR (except damage or loss attributable to the fault of Drawings or Specifications or to the acts or omissions of OWNER or ENGINEER or anyone employed by either of them or anyone for whose acts either of them may be liable, and not attributable, directly or indirectly, in whole or in part, to the fault or negligence of CONTRACTOR). CONTRACTOR's duties and responsibilities for the safety and protection of the Work shall continue until such time as all the Work is completed and Engineer has issued a notice to OWNER and CONTRACTOR in accordance with paragraph 14.13 that the Work is acceptable (except as otherwise expressly provided in connection with Substantial Completion).

6.21 CONTRACTOR shall designate a responsible representative at the site whose duty shall be the prevention of accidents. This person shall be CONTRACTOR's superintendent unless otherwise designated in writing by CONTRACTOR to OWNER.

Emergencies:

6.22 In emergencies affecting the safety or protection of persons or the Work or property at the site or adjacent thereto, CONTRACTOR, without special instruction or authorization from ENGINEER or OWNER, is obligated to act to prevent threatened damage, injury or loss. CONTRACTOR shall give ENGINEER prompt written notice if CONTRACTOR believes that any significant changes in the Work or variations from the Contract Documents have been caused thereby. If ENGINEER determines that a change in the Contract Documents is required because of the action taken in response to an emergency, a Work Directive Change or Change Order will be issued to document the consequences of the changes or variations.

Shop Drawings and Samples:

6.23 After checking and verifying all field measurements and after complying with applicable procedures specified in the General Requirements, CONTRACTOR shall submit to ENGINEER for review and approval in accordance with the accepted schedule of Shop Drawing submissions (see paragraph 2.9), or for other appropriate action if so indicated in the Supplementary Conditions, five copies (unless otherwise specified in the General Requirements) of all Shop Drawings, which will bear a stamp or specific written indication that CONTRACTOR has satisfied CONTRACTOR's responsibilities under the Contract Documents with respect to the review submission. All submissions will be identified as ENGINEER may require. The data shown on the Shop Drawings will be complete with respect to quantities, dimensions, specified performance and design criteria, materials and similar data to enable ENGINEER to review the information as required.

6.24 CONTRACTOR shall also submit to ENGINEER for review and approval with such promptness as to cause no delay in Work, all samples required by the Contract Documents. All samples will have been checked by and accompanied by a specific written indication that CONTRACTOR has satisfied CONTRACTOR's responsibilities under the Contract Documents with respect to the review of the submission and will be identified clearly as to material, Supplier, pertinent data such as catalog numbers and the use for which intended.

6.25.1 Before submission of each Shop Drawing or sample CONTRACTOR shall have determined and verified all quantities, dimensions, specified performance criteria, installation requirements, materials, catalog numbers and similar data with respect thereto and reviewed or coordinated each Shop Drawing or sample with other Shop Drawings and samples and with the requirements of the Work and the Contract Documents.

6.25.2 At the time of each submission, CONTRACTOR shall give ENGINEER specific written notice of each variation that the Shop Drawings or samples may have from the requirements of the Contract Documents, and, in addition, shall cause a specific notation to be made on each Shop Drawing submitted to ENGINEER for review and approval of each such variation.

6.26 ENGINEER will review and approve with reasonable promptness Shop Drawings

and samples, but ENGINEER's review and approval will be only for conformance with the design concept of the Project and for compliance with the information given in the Contract Documents and shall not extend to means, methods, techniques, sequences or procedures of construction (except where a specific means, method, technique, sequence or procedure of construction is indicated in or required by the Contract Documents) or to safety precautions or programs incident thereto. The review and approval of a separate item as such will not indicate approval of the assembly in which the item functions. CONTRACTOR shall make corrections required by ENGINEER, and shall return the required number of corrected copies of Shop Drawings and submit as required new samples for review and approval. CONTRACTOR shall direct specific attention in writing to revisions other than the corrections called for by ENGINEER on previous submittals.

6.27 ENGINEER's review and approval of Shop Drawings or samples shall not relieve CONTRACTOR from responsibility for any variation from the requirements of the Contract Documents unless CONTRACTOR has in writing called ENGINEER's attention to each such variation at the time of submission as required by paragraph 6.25.2 and ENGINEER has given written approval of each such variation by a specific written notation thereof incorporated in or accompanying the Shop Drawing or sample approval; nor will any approval by ENGINEER relieve CONTRACTOR from responsibility for errors or omissions in the Shop Drawings or from responsibility for having complied with the provisions of paragraph 6.25.1.

6.28 Where a Shop Drawing or sample is required by the Specifications, any related Work performed prior to ENGINEER's review and approval of the pertinent submission will be the sole expense and responsibility of CONTRACTOR.

Continuing the Work:

6.29 CONTRACTOR shall carry on the Work and adhere to the progress schedule during all disputes or disagreements with OWNER. No Work shall be delayed or postponed pending resolution of any disputes or disagreements, except as permitted by paragraph 15.5 or as CONTRACTOR and OWNER may otherwise agree in writing.

Indemnification:

6.30 To the fullest extent permitted by Laws and Regulations CONTRACTOR shall indemnify and hold harmless OWNER and ENGINEER and their consultants, agents and employees from and against all claims, damages, losses and expenses, direct, indirect or consequential (including but not limited to fees and charges of engineers, architects, attorneys and other professionals and court and arbitration costs) arising out of or resulting from the performance of the Work, provided that any such claim, damage, loss or expense (a) is attributable to bodily injury, sickness, disease or death, or to injury to or destruction of tangible property (other than the Work itself) including the loss of use resulting there from and (b) is caused in whole or in part by an negligent act or omission of CONTRACTOR, any Subcontractor, any person or organization directly or indirectly employed by any of them to perform or furnish any of the Work or anyone for whose acts any of them may be liable, regardless of whether or not it is caused in

part by a party indemnified hereunder or arises by or is imposed by Law and Regulations regardless of the negligence of any such party.

6.31 In any and all claims against OWNER or ENGINEER or any of their consultants, agents or employees by any employee of CONTRACTOR, any Subcontractor, any person or organization directly or indirectly employed by any of them to perform or furnish any of the Work or anyone for whose acts any of them may be liable, the indemnification obligation under paragraph 6.30 shall not be limited in any way by any limitation on the amount or type of damages, compensation or benefits payable by or for CONTRACTOR or any such Subcontractor or other person or organization under workers' or workmen's compensation acts, disability benefit acts or other employee benefit acts.

6.32 The obligations of CONTRACTOR under paragraph 6.30 shall not extend to the liability of ENGINEER, ENGINEER's consultants, agents or employees arising out of the preparation or approval of maps, drawings, opinions, reports, surveys, Change Orders, designs or specifications.

ARTICLE 7 - OTHER WORK

_____

Related Work at Site:

7.1 OWNER may perform other work related to the Project at the site by OWNER's own forces, have other work performed by utility owners or let other direct contracts therefore which shall contain General Conditions similar to these. If the fact that such other work is to be performed was not noted in the Contract Documents, written notice thereof will be given to CONTRACTOR prior to starting any such other work; and, if CONTRACTOR believes that such performance will involve additional expense to CONTRACTOR or requires additional time and the parties are unable to agree as to the extent thereof, CONTRACTOR may make a claim therefore as provided in Articles 11 and 12.

7.2 CONTRACTOR shall afford each utility owner and other contractor who is a party to such a direct contract (or OWNER, if OWNER is performing the additional work with OWNER's employees) proper and safe access to the site and a reasonable opportunity for the introduction and storage of materials and equipment and the execution of such work, and shall properly connect and coordinate the Work with theirs. CONTRACTOR shall do all cutting, fitting and patching of the Work that may be required to make its several parts come together properly and integrate with such other work. CONTRACTOR shall not endanger any work of others by cutting, excavating or otherwise altering their work and will only cut or alter their work with the written consent of ENGINEER and the others whose work will be affected. The duties and responsibilities of CONTRACTOR under this paragraph are for the benefit of such utility owners and other contractors to the extent that there are comparable provisions for the benefit of CONTRACTOR in said direct contracts between OWNER and such utility owners and other contractors.

7.3 If any part of CONTRACTOR's Work depends for proper execution or results upon the work of any such other contractor or utility owner (or OWNER), CONTRACTOR shall inspect and promptly report to ENGINEER in

writing any delays, defects or deficiencies in such work that render it unavailable or unsuitable for such proper execution and results. CONTRACTOR's failure so to report will constitute an acceptance of the other work as fit and proper for integration with CONTRACTOR's Work except for latent or nonapparent defects and deficiencies in the other work.

Coordination:

7.4 If OWNER contracts with others for the performance of other work on the Project at the site, the person or organization who will have authority and responsibility for coordination of the activities among the various prime contractors will be identified in the Supplementary Conditions, and the specific matters to be covered by such authority and responsibility will be itemized, and the extent of such authority and responsibilities will be provided in the Supplementary Conditions. Unless otherwise provided in the Supplementary Conditions, neither OWNER nor ENGINEER shall have any authority or responsibility in respect of such coordination.

ARTICLE 8 - OWNER'S RESPONSIBILITIES

8.1 OWNER shall issue all communications to CONTRACTOR through ENGINEER.

8.2 In case of termination of the employment of ENGINEER, OWNER shall appoint an engineer against whom CONTRACTOR makes no reasonable objection, whose status under the Contract Documents shall be that of the former ENGINEER. Any dispute in connection with such appointment shall be subject to arbitration.

8.3 OWNER shall furnish the data required of OWNER under the Contract Documents promptly and shall make payments to CONTRACTOR promptly after they are due as provided in paragraphs 14.4 and 14.13.

8.4 OWNER's duties in respect of providing lands and easements and providing engineering surveys to establish reference points are set forth in paragraphs 4.1 and 4.4. Paragraph 4.2 refers to OWNER's identifying and making available to CONTRACTOR copies of reports of explorations and tests of subsurface conditions at the site and in existing structures which have been utilized by ENGINEER in preparing the Drawings and Specifications.

8.5 OWNER's responsibilities in respect of purchasing and maintaining liability and property insurance are set forth in paragraphs 5.5 through 5.8.

8.6 OWNER is obligated to execute Change Orders as indicated in paragraph 10.4.

8.7 OWNER's responsibility in respect of certain inspections, tests and approvals is set forth in paragraph 13.4.

8.8 In connection with OWNER's right to stop Work or suspend Work, see paragraphs 13.10 and 15.1 Paragraph 15.2 deals with OWNER's right to terminate services of CONTRACTOR under certain circumstances.

ARTICLE 9 - ENGINEER'S STATUS DURING CONSTRUCTION

Owner's Representative:

9.1 ENGINEER will be OWNER's representative during the construction period. The duties and responsibilities and the limitations of authority of ENGINEER as OWNER's representative during construction are set forth in the Contract Documents and shall not be extended without written consent of OWNER and ENGINEER.

Visits to Site:

9.2 ENGINEER will make visits to the site at intervals appropriate to the various stages of construction to observe the progress and quality of the executed Work and to determine, in general, if the Work is proceeding in accordance with the Contract Documents. ENGINEER will not be required to make exhaustive or continuous on-site inspections to check the quality or quantity of the Work. ENGINEER's efforts will be directed toward providing for OWNER a greater degree of confidence that the completed Work will conform to the Contract Documents. On the basis of such visits and on-site observations as an experienced and qualified design professional, ENGINEER will keep OWNER informed of the progress of the Work and will endeavor to guard OWNER against defects and deficiencies in the Work.

Project Representation:

9.3 If OWNER and ENGINEER agree, ENGINEER will furnish a Resident Project Representative to assist ENGINEER in observing the performance of the Work. The duties, responsibilities and limitations of authority of any such Resident Project Representative and assistants will be as provided in the Supplementary Conditions. If OWNER designates another agent to represent OWNER at the site who is not ENGINEER's agent or employee, the duties, responsibilities and limitations of authority of such other person will be as provided in the Supplementary Conditions.

Clarifications and Interpretation:

9.4 ENGINEER will issue with reasonable promptness such written clarifications or interpretations of the requirements of the Contract Documents (in the form of Drawings or otherwise) as ENGINEER may determine necessary, which shall be consistent with or reasonably inferable from the overall intent of the Contract Documents. If CONTRACTOR believes that a written clarification or interpretation justifies an increase in the Contract Price or an extension of the Contract Time and the parties are unable to agree to the amount or extent thereof, CONTRACTOR may make a claim therefore as provided in Article 11 or Article 12.

Authorized Variations in Work:

9.5 ENGINEER may authorize minor variations in the Work from the requirements of the Contract Documents which do not involve as adjustment in the Contract Price or the Contract Time and are consistent with the overall intent of the Contract Documents. These may be accomplished by a Field Order

and will be binding on OWNER, and also on CONTRACTOR who shall perform the Work involved promptly. If CONTRACTOR believes that a Field Order justifies an increase in the Contract Price or an extension of the Contract Time and the parties are unable to agree as to the amount or extent thereof, CONTRACTOR may make a claim therefore as provided in Article 11 or 12.

Rejecting Defective Work:

9.6 ENGINEER will have authority to disapprove or reject Work which ENGINEER believes to be *defective*, and will also have authority to require special inspection or testing of the Work as provided in paragraph 13.9, whether or not the Work is fabricated, installed or completed.

Shop Drawings, Change Orders and Payments:

9.7 In connection with ENGINEER's responsibility for Shop Drawings and samples, see paragraphs 6.23 through 6.29 inclusive.

9.8 In connection with ENGINEER's responsibilities as to Change Orders, see Articles 10, 11, and 12.

9.9 In connection with ENGINEER's responsibilities in respect of Applications for Payment, etc., see Article 14.

Determinations for Unit Prices:

9.10 ENGINEER will determine the actual quantities and classifications of Unit Price Work performed by CONTRACTOR. ENGINEER will review with CONTRACTOR ENGINEER's preliminary determinations on such matters before rendering a written decision thereon (by recommendation of an Application for Payment or otherwise). ENGINEER's written decisions thereon will be final and binding upon OWNER and CONTRACTOR, unless, within ten days after the date of any such decision, either OWNER or CONTRACTOR delivers to the other party to the Agreement and to ENGINEER written notice of intention to appeal from such a decision.

Decisions on Disputes:

9.11 ENGINEER will be the initial interpreter of the requirements of the Contract Documents and judge of the acceptability of the Work thereunder. Claims, disputes and other matters relating to the acceptability of the Work or the interpretation of the requirements of the Contract Documents pertaining to the performance and furnishing of the Work and claims under Articles 11 and 12 in respect of changes in the Contract Price or Contract Time will be referred initially to ENGINEER in writing with a request for a formal decision in accordance with this paragraph, which ENGINEER will render in writing within a reasonable time. Written notice of each such claim, dispute and other matter will be delivered by the claimant to ENGINEER and the other party to the Agreement promptly (but in no event later than thirty days) after the occurrence of the event giving rise thereto, and written supporting data will be submitted to ENGINEER and the other party within sixty days after such occurrence unless ENGINEER allows an additional period of time to ascertain more accurate data in support of the claim.

9.12 When functioning as interpreter and judge under paragraphs 9.10 and 9.11, ENGINEER will not show partiality to OWNER or CONTRACTOR and will not be liable in connection with any interpretation or decision rendered in good faith in such capacity. The rendering of a decision by ENGINEER pursuant to paragraphs 9.10 and 9.11 with respect to any such claim, dispute or other matter (except any which have been waived by the making or acceptance of final payment as provided in paragraph 14.16) will be a condition precedent to any exercise by OWNER or CONTRACTOR of such rights or remedies as either may otherwise have under the Contract Documents or by Laws or Regulations in respect of any such claim, dispute or other matter.

Limitations on ENGINEER's Responsibilities:

9.13 Neither ENGINEER's authority to act under this Article 9 or elsewhere in the Contract Documents nor any decision made by ENGINEER in good faith either to exercise or not exercise such authority shall give rise to any duty or responsibility of ENGINEER to CONTRACTOR, any Subcontractor, any Supplier, or any other person or organization performing any of the Work, or to any surety for any of them.

9.14 Whenever in the Contract Documents the terms "as ordered", "as directed", "as required", "as allowed", "as approved" or terms of like effect or import are used, or the adjectives "reasonable", "suitable", "acceptable", "proper" or "satisfactory" or adjectives of like effect or import are used to describe a requirement, direction, review or judgment of ENGINEER as to the Work, it is intended that such requirement, direction, review or judgment will be solely to evaluate the Work for compliance with the Contract Documents (unless there is a specific statement indicating otherwise). The use of any such term or adjective shall not be effective to assign to ENGINEER any duty or authority to supervise or direct the furnishing or performance of the Work or any duty or authority to undertake responsibility contrary to the provisions of paragraph 9.15 or 9.16.

9.15 ENGINEER will not be responsible for CONTRACTOR's means, methods, techniques, sequences or procedures of construction, or the safety precautions and programs incident thereto, and ENGINEER will not be responsible for CONTRACTOR's failure to perform or furnish the Work in accordance with the Contract Documents.

9.16 ENGINEER will not be responsible for the acts or omissions of CONTRACTOR or of any Subcontractor, any Supplier, or of any other person or organization performing or furnishing any of the Work.

ARTICLE 10 - CHANGES IN THE WORK

_____

10.1 Without invalidating the Agreement and without notice to any surety, OWNER may, at any time or from time to time, order additions, deletions or revisions in the Work; these will be authorized by a Written Amendment, a Change Order, or a Work Directive Change. Upon receipt of any such document, CONTRACTOR shall promptly proceed with the Work involved which will be performed under the applicable conditions of

the Contract Documents (except as otherwise specifically provided).

10.2 If OWNER and CONTRACTOR are unable to agree as to the extent, if any, of an increase or decrease in the Contract Price or an extension or shortening of the Contract Time that should be allowed as a result of a Work Directive Change, a claim may be made therefore as provided in Article 11 or Article 12.

10.3 CONTRACTOR shall not be entitled to an increase in the Contract Price or an extension of the Contract Time with respect to any Work performed that is not required by the Contract Documents as amended, modified and supplemented as provided in paragraphs 3.4 and 3.5, except in the case of an emergency as provided in paragraph 6.22 and except in the case of uncovering Work as provided in paragraph 13.9.

10.4 OWNER and CONTRACTOR shall execute appropriate Change Orders (or Written Amendments)

10.4.1 changes in the Work which are ordered by OWNER pursuant to paragraph 10.1, are required because of acceptance of *defective* Work under paragraph 13.13 or correcting *defective* Work under paragraph 13.14, or are agreed to by the parties;

10.4.2 changes in the Contract Price or Contract Time which are agreed to by the parties; and

10.4.3 changes in the Contract Price or Contract Time which embody the substance of any written decision rendered by ENGINEER pursuant to paragraph 9.11;

provided that, in lieu of executing any such Change Order, an appeal may be taken from any such decision in accordance with the provisions of the Contract Documents and applicable Laws and Regulations, but during any such appeal, CONTRACTOR shall carry on the Work and adhere to the progress schedule as provided in paragraph 6.29.

10.5 If notice of any change affecting the general scope of the Work or the provisions of the Contract Documents (including, but not limited to, Contract Price or Contract Time) is required by the provisions of any Bond to be given to a surety, the giving of any such notice will be CONTRACTOR's responsibility, and the amount of each applicable Bond will be adjusted accordingly.

ARTICLE 11 - CHANGE OF CONTRACT PRICE

11.1 The Contract Price constitutes the total compensation (subject to authorized adjustments) payable to CONTRACTOR for performing the Work. All duties, responsibilities and obligations assigned to or undertaken by CONTRACTOR shall be at his expense without change in the Contract Price.

11.2 The Contract Price may only be changed by a Change Order or by a Written Amendment. Any claim for an increase or decrease in the Contract Price shall be based on written notice delivered by the party making the claim to the other party and to ENGINEER promptly (but in no event later than thirty days) after the occurrence of the event giving rise to the claim and stating the general nature of the claim. Notice of the

amount of the claim with supporting data shall be delivered within sixty days after such occurrence (unless ENGINEER allows an additional period of time to ascertain more accurate data in support of the claim) and shall be accompanied by claimant's written statement that the amount claimed covers all known amounts (direct, indirect and consequential) to which the claimant is entitled as a result of the occurrence of said event. All claims for adjustment in the Contract Price shall be determined by ENGINEER in accordance with paragraph 9.11 if OWNER and CONTRACTOR cannot otherwise agree on the amount involved. No claim for an adjustment in the Contract Price will be valid if not submitted in accordance with this paragraph 11.2.

11.3 The value of any Work covered by a Change Order or of any claim for an increase or decrease in the Contract Price shall be determined in one of the following ways:

11.3.1 Where the Work involved is covered by unit prices contained in the Contract Documents, by application of unit prices to the quantities of the items involved (subject to the provisions of paragraphs 11.9.1. through 11.9.3, inclusive).

11.3.2 By mutual acceptance of a lump sum (which may include an allowance for overhead and profit not necessarily in accordance with paragraph 11.6.2.1.).

11.3.3 On the basis of the Cost of the Work (determined as provided in paragraphs 11.4 and 11.5) plus a CONTRACTOR's Fee for overhead and profit (determined as provided in paragraphs 11.6 and 11.7).

Cost of the Work:

11.4 The term Cost of the Work means the sum of all costs necessarily incurred and paid by CONTRACTOR in the proper performance of the Work. Except as otherwise may be agreed to in writing by OWNER, such costs shall be in amounts no higher than those prevailing in the locality of the Project, shall include only the following items and shall not include any of the costs itemized in paragraph 11.5:

11.4.1 Payroll costs for employees in the direct employ of CONTRACTOR in the performance of the Work under schedules of job classifications agreed upon by OWNER and CONTRACTOR. Payroll costs for employees not employed full time on the Work shall be apportioned on the basis of their time spent on the Work. Payroll costs shall include, but not be limited to, salaries and wages plus the cost of fringe benefits which shall include social security contributions unemployment, excise and payroll taxes, workers' or workmen's compensation, health and retirement benefits, bonuses, sick leave, vacation and holiday pay applicable thereto. Such employees shall include superintendents and foremen at the site. The expenses of performing Work after regular working hours, on Saturday, Sunday or legal holidays, shall be included in the above to the extent authorized by OWNER.

11.4.2 Cost of all materials and equipment furnished and

incorporated in the Work, including costs of transportation and storage thereof, and Suppliers' field services required in connection therewith. All cash discounts shall accrue to CONTRACTOR unless OWNER deposits funds with CONTRACTOR with which to make payments, in which case the cash discounts shall accrue to OWNER. All trade discounts, rebates and refunds and all returns from sale of surplus materials and equipment shall accrue to OWNER, and CONTRACTOR shall make provisions so that they may be obtained.

11.4.3 Payments made by CONTRACTOR to the Subcontractors for Work performed by Subcontractors. If required by OWNER, CONTRACTOR shall obtain competitive bids from Subcontractors acceptable to CONTRACTOR and shall deliver such bids to OWNER who will then determine, with the advice of ENGINEER, which bids will be accepted. If a subcontract provides that the Subcontractor is to be paid on the basis of Cost of the Work Plus a Fee, the Subcontractor's Cost of the Work shall be determined in the same manner as CONTRACTOR's Cost of the Work. All subcontracts shall be subject to the other provisions of the Contract Documents insofar as applicable.

11.4.4 Costs of special consultants (including but not limited to engineers, architects, testing laboratories, surveyors, attorneys and accountants) employed for services specifically related to the Work.

11.4.5 Supplemental costs including the following:

11.4.5.1 The proportion of necessary transportation, travel and subsistence expenses of CONTRACTOR's employees incurred in discharge of duties connected with the Work.

11.4.5.2 Cost, including transportation and maintenance, of all materials, supplies, equipment, machinery, appliances, office and temporary facilities at the site and hand tools not owned by the workers, which are consumed in the performance of the Work, and cost less market value of such items used by not consumed which remain the property of CONTRACTOR.

11.4.5.3 Rentals of all construction equipment and machinery and the parts thereof whether rented from CONTRACTOR or others in accordance with rental agreements approved by OWNER with the advice of ENGINEER, and the costs of transportation, loading, unloading, installation, dismantling and removal thereof - all in accordance with terms of said rental agreements. The rental of any such equipment, machinery or parts shall cease when the use thereof is not longer necessary for the Work.

11.4.5.4 Sales, consumer, use or similar taxes related to the Work, and for which CONTRACTOR is liable, imposed by Laws and Regulations.

11.4.5.5 Deposits lost for causes other than negligence of CONTRACTOR, any Subcontractor or anyone directly or indirectly employed by any of them or for whose acts any of them may be liable, and royalty payments and fees for permits and licenses.

11.4.5.6 Losses and damages (and related expenses), not compensated by insurance or otherwise, to the Work or otherwise sustained by CONTRACTOR in connection with the performance and furnishing of the Work (except losses and damages within the deductible amounts of property insurance established by OWNER in accordance with paragraph 5.9), provided they have resulted from causes other than the negligence of CONTRACTOR, any Subcontractor, or anyone directly or indirectly employed by any of them or for whose acts any of them may be liable. Such losses shall include settlements made with the written consent and approval of OWNER. No such losses, damages and expenses will be included in the Cost of Work for the purpose of determining CONTRACTOR's Fee. If, however, any such loss or damage requires reconstruction and CONTRACTOR is placed in charge thereof, CONTRACTOR shall be paid for services a fee proportionate to that stated in paragraph 11.6.2.

11.4.5.7 The cost of utilities, fuel and sanitary facilities at the site.

11.4.5.8 Minor expenses such as telegrams, long distance telephone calls, telephone service at the site, expressage and similar petty cash items in connection with the Work.

11.4.5.9 Cost of premiums for additional Bonds and insurance required because of changes in the Work and premiums for property insurance coverage within the limits of the deductible amounts established by OWNER in accordance with paragraph 5.9.

11.5 The term Cost of the Work shall not include any of the following:

11.5.1 Payroll costs and other compensation of CONTRACTOR's officers, executives, principals (of partnership and sole proprietorships), general managers, engineers, architects, estimators, attorneys, auditors, accountants, purchasing and contracting agents, expeditors, timekeepers, clerks and other personnel employed by CONTRACTOR whether at the site or in CONTRACTOR's principal or a branch office for general administration of the Work and not specifically included in the agreed upon schedule of job classifications referred to in paragraph 11.4.1 or specifically covered by paragraph 11.4.4 - all of which are to be considered administrative costs covered by the CONTRACTOR's Fee.

11.5.2 Expenses of CONTRACTOR's principal and branch offices other than CONTRACTOR's office at the site.

11.5.3 Any part of CONTRACTOR's

capital expenses, including interest on CONTRACTOR's capital employed for the Work and charges against CONTRACTOR for delinquent payments.

11.5.4 Cost of premiums for all Bonds and for all insurance whether or not CONTRACTOR is required by the Contract Documents to purchase and maintain the same (except for the cost of premiums covered by subparagraph 11.4.5.9 above).

11.5.5 Cost due to the negligence of CONTRACTOR, any Subcontractor, or anyone directly or indirectly employed by any of them or for whose acts any of them may be liable, including but not limited to, the correction of *defective* Work, disposal of materials or equipment wrongly supplied and making good any damage to property.

11.5.6 Other overhead or general expenses costs of any kind and the costs of any item not specifically and expressly included in paragraph 11.4.

CONTRACTOR's Fee:

11.6 The CONTRACTOR's Fee allowed to CONTRACTOR for overhead and profit shall be determined as follows:

11.6.1 a mutually acceptable fixed fee; or if none can be agreed upon,

11.6.2 a fee based on the following percentages of the various portions of the Cost of the Work:

11.6.2.1 for costs incurred under paragraphs 11.4.1 and 11.4.2, the CONTRACTOR's Fee shall be fifteen percent;

11.6.2.2 for costs incurred under paragraph 11.4.3, the CONTRACTOR's Fee shall be five percent; and if a subcontract is on the basis of Cost of the Work Plus a Fee, the maximum allowable to CONTRACTOR on account of overhead and profit of all Subcontractors shall be fifteen percent;

11.6.2.3 no fee shall be payable on the basis of costs itemized under paragraphs 11.4.4, 11.4.5 and 11.5;

11.6.2.4 the amount of credit to be allowed by CONTRACTOR to OWNER for any such change which results in a net decrease in cost will be the amount of the actual net decreases plus a deduction in CONTRACTOR's Fee by an amount equal to ten percent of the net decrease; and

11.6.2.5 when both additions and credits are involved in any one change, the adjustment in CONTRACTOR's Fee shall be computed on the basis of the net change in accordance with paragraphs 11.6.2.1 through 11.6.2.4, inclusive.

11.7 Whenever the cost of any Work is to be determined pursuant to paragraph 11.4 or 11.5, CONTRACTOR will submit in form acceptable to ENGINEER an itemized cost breakdown together with supporting data.

Cash Allowances:

11.8 It is understood that CONTRACTOR has included in the Contract Price all allowances so named in the Contract Documents and shall cause the Work so covered to be done by such Subcontractors or Suppliers and for such sums within the limit of the allowances as may be acceptable to ENGINEER. CONTRACTOR agrees that:

11.8.1. The allowances include the cost to CONTRACTOR (less any applicable trade discounts) of materials and equipment required by the allowances to be delivered at the site, and all applicable taxes; and

11.8.2. CONTRACTOR's costs for unloading and handling on the site, labor, installation costs, overhead, profit and other expenses contemplated for the allowances have been included in the Contract Price and not in the allowances. No demand for additional payment on account of any thereof will be valid.

Prior to final payment, an appropriate Change Order will be issued as recommended by ENGINEER to reflect actual amounts due CONTRACTOR on account of Work covered by allowances, and the Contract Price shall be correspondingly adjusted.

Unit Price Work:

11.9.1 Where the Contract Documents provide that all or part of the Work is to be Unit Price Work, initially the Contract Price will be deemed to include for all Unit Price Work an amount equal to the sum of the established unit prices for each separately identified item of Unit Price Work times the estimated quantity of each item as indicated in the Agreement. The estimated quantities of items of Unit Price Work are not guaranteed and are solely for the purpose of comparison of Bids and determining an initial Contract Price. Determinations of the actual quantities and classifications of Unit Price Work performed by CONTRACTOR will be made by ENGINEER in accordance with Paragraph 9.10.

11.9.2 Each unit price will be deemed to include an amount considered by CONTRACTOR to be adequate to cover CONTRACTOR's overhead and profit for each separately identified item.

11.9.3 There the quantity of any item of Unit Price Work performed by CONTRACTOR differs materially and significantly from the estimated quantity of such item indicated in the Agreement and there is no corresponding adjustment with respect to any other item of Work and if CONTRACTOR believes that CONTRACTOR has incurred additional expenses as a result thereof, CONTRACTOR may make a claim for an increase in the CONTRACTOR may make a claim for an increase in the Contract Price in accordance with Article 11 if the parties are unable to agree as to the amount of any such increase.

ARTICLE 12 - CHANGE OF CONTRACT TIME

12.1 The Contract Time may only be changed by a Change Order or a Written

Amendment. Any claim for an extension or shortening of the Contract Time shall be based on written notice delivered by the party making the claim to the other party and to ENGINEER promptly (but in no event later than thirty days) after the occurrence of the event giving rise to the claim and stating the general nature of the claim. Notice of the extent of the claim with supporting data shall be delivered within sixty days after such occurrence (unless ENGINEER allows an additional period of time to ascertain more accurate data in support of the claim) and shall be accompanied by the claimant's written statement that the adjustment claimed is the entire adjustment to which the claimant has reason to believe it is entitled as a result of the occurrence of said event. All claims for adjustment in the Contract Time shall be determined by ENGINEER in accordance with paragraph 9.11 if OWNER and CONTRACTOR cannot other wise agree. No claim for an adjustment in the Contract Time will be valid if not submitted in accordance with the requirements of this paragraph 12.1.

12.2 The Contract Time will be extended in an amount equal to time lost due to delays beyond the control of CONTRACTOR if a claim is made therefore as provided in paragraph 12.1. Such delays shall include, but not be limited to, acts or neglect by OWNER or others performing additional work as contemplated by Article 7, or to fires, floods, labor disputes, epidemics, abnormal weather conditions or acts of God.

12.3 All time limits stated in the Contract Documents are of the essence of the Agreement. The provisions of this Article 12 shall not exclude recovery for damages (including but not limited to fees and charges of engineers, architects, attorneys and other professionals and court and arbitration costs) for delay by either party.

ARTICLE 13 - WARRANTY AND GUARANTEE; TESTS AND INSPECTIONS: CORRECTION, REMOVAL OR ACCEPTANCE OF DEFECTIVE WORK

_____
____

Warranty and Guarantee:

13.1 CONTRACTOR warrants and guarantees to OWNER and ENGINEER that all Work will be in accordance with the Contract Documents and will not be *defective*. Prompt notice of all defects shall be given to CONTRACTOR. All *defective* Work, whether or not in place, may be rejected, corrected or accepted as provided in this Article 13.

Access to Work:

13.2 ENGINEER and ENGINEER's representatives, other representative of OWNER, testing agencies and governmental agencies with jurisdictional interests will have access to the Work at reasonable times for their observation, inspecting and testing. CONTRACTOR shall provide proper and safe conditions for such access.

Tests and Inspection:

13.3 CONTRACTOR shall give ENGINEER timely notice of readiness of the Work for all required inspection, tests or approvals.

13.4 If Laws or Regulations of any public body having jurisdiction require any Work (or

part thereof) to specifically be inspected, tested or approved, CONTRACTOR shall assume full responsibility therefore, pay all costs in connection therewith and furnish ENGINEER the required certificates of inspection, testing or approval. CONTRACTOR shall also be responsible for and shall pay all costs in connection with any inspection or testing required in connection with OWNER's or ENGINEER's acceptance of a Supplier of materials or equipment proposed to be incorporated in the Work, or of materials or equipment submitted for approval prior to CONTRACTOR's purchase thereof for incorporation in the Work. The cost of all inspections, tests and approvals in addition to the above which are required by the Contract Documents shall be paid by OWNER (unless otherwise specified).

13.5 All inspections, tests or approvals other than those required by Laws or Regulations of any public body having jurisdiction shall be performed by organizations acceptable to OWNER and CONTRACTOR (or by ENGINEER if so specified).

13.6 If any Work (including the work of others) that is to be inspected, tested or approved is covered without written concurrence of ENGINEER, it must, if requested by ENGINEER, be uncovered for observation. Such uncovering shall be at CONTRACTOR's expense unless CONTRACTOR has given ENGINEER timely notice of CONTRACTOR's intention to cover the same and ENGINEER has not acted with reasonable promptness in response to such notice.

13.7 Neither observations by ENGINEER nor inspections, tests or approvals by others shall relieve CONTRACTOR with CONTRACTOR's obligations to perform the Work in accordance with the Contract Documents.

Uncovering Work:

13.8 If any Work is covered contrary to the written request of ENGINEER, it must, if requested by ENGINEER, be uncovered for ENGINEER's observations and replaced at CONTRACTOR's expense.

13.9 If ENGINEER considers it necessary or advisable that covered Work be observed by ENGINEER or inspected or tested by others, CONTRACTOR, at ENGINEER's request, shall uncover, expose or otherwise make available for observation, inspection or testing as ENGINEER may require, that portion of the Work in question, furnishing all necessary labor, material and equipment. If it is found that such Work is *defective*, CONTRACTOR shall bear all direct, indirect and consequential costs of such uncovering, exposure, observation, inspection and testing and of satisfactory reconstruction, (including but not limited to fees and charges of engineers, architects, attorneys and other professionals), and OWNER shall be entitled to an appropriate decrease in the CONTRACT Price, and, if the parties are unable to agree as to the amount thereof, may make a claim therefore as provided in Article 11. If, however, such Work is not found to be *defective*, CONTRACTOR shall be allowed an increase in the Contract Price or an extension of the Contract Time, or both, directly attributable to such uncovering, exposure, observation, inspection, testing and reconstruction; and, if the parties are unable to agree as to the amount or extent thereof, CONTRACTOR may make a claim therefore as provided in Articles 11 and 12.

Owner May Stop the Work:

13.10 If the Work is *defective*, or CONTRACTOR fails to supply sufficient skilled workers or suitable materials or equipment, or fails to furnish or perform the Work in such a way that the completed Work will conform to the Contract Documents, OWNER may order CONTRACTOR to stop the Work, or any portion thereof, until the cause for such order has been eliminated; however, this right of OWNER to stop the Work shall not give rise to any duty on the part of OWNER to exercise this right for the benefit of CONTRACTOR or any other party.

Correction or Removal of Defective Work:

13.11 If required by ENGINEER, CONTRACTOR shall promptly, as directed, either correct all *defective* Work, whether or not fabricated, installed or completed, or, if the Work has been rejected by ENGINEER, remove it from the site and replace it with *nondefective* Work. CONTRACTOR shall bear all direct, indirect and consequential costs of such correction or removal (including but not limited to fees and charges of engineers, architects, attorneys and other professionals) made necessary thereby.

One Year Correction Period:

13.12 If within one year after the date of Substantial Completion or such longer period of time as may be prescribed by Laws or Regulations or by the terms of any applicable special guarantee required by the Contract Documents or by any specific provision of the Contract Documents, any Work is found to be *defective*, CONTRACTOR shall promptly, without cost to OWNER and in accordance with OWNER's written instruction, either correct such *defective* Work, or, if it has been rejected by OWNER, remove it from the site and replace it with *nondefective* Work. If CONTRACTOR does not promptly comply with the terms of such instructions, or in an emergency where delay would cause serious risk of loss or damage, OWNER may have the *defective* Work corrected or the rejected Work removed and replaced, and all direct, indirect and consequential costs of such removal and replacement (including but not limited to fees and charges or engineers, architects, attorneys and other professionals) will be paid by CONTRACTOR. In special circumstances where a particular item of equipment is placed in continuous service before Substantial Completion of all the Work, the correction period for that item may start to run from an earlier date if so provided in the Specifications or by Written Amendment.

Acceptance of Defective Work:

13.13 If, instead of requiring correction or removal and replacement of *defective* Work, OWNER (and, prior to ENGINEER's recommendation of final payment, also ENGINEER) prefers to accept it, OWNER may do so. CONTRACTOR shall bear all direct, indirect and consequential costs attributable to OWNER's evaluation of and determination to accept such *defective* Work (such costs to be approved by ENGINEER as to reasonableness and to include but not be limited to fees and charges of engineers, architects, attorneys and other professionals). If any such acceptance occurs prior to ENGINEER's recommendation of final payment, a Change Order will be issued

incorporating the necessary revisions in the Contract Documents with respect to the Work; and OWNER shall be entitled to an appropriate decrease in the Contract Price, and, if the parties are unable to agree as to the amount thereof, OWNER may make a claim therefore as provided in Article 11. If the acceptance occurs after such recommendation, an appropriate amount will be paid by CONTRACTOR to OWNER.

OWNER May Correct Defective Work:

13.14 If CONTRACTOR fails within a reasonable time after written notice of ENGINEER to proceed to correct and to correct *defective* Work or to remove and replace rejected Work as required by ENGINEER in accordance with paragraph 13.11, or if CONTRACTOR fails to perform the Work in accordance with the Contract Documents, or if CONTRACTOR fails to comply with any other provision of the Contract Documents, OWNER may, after seven days' written notice to CONTRACTOR, correct and remedy any such deficiency. In exercising the rights and remedies under this paragraph OWNER shall proceed expeditiously. To the extent necessary to complete corrective and remedial action, OWNER may exclude CONTRACTOR from all or part of the site, take possession of all or part of the Work, and suspend CONTRACTOR's services related thereto, take possession of CONTRACTOR's tools, appliances, construction equipment and machinery at the site and incorporate in the Work all materials and equipment stored at the site or for which OWNER has paid CONTRACTOR but which are stored elsewhere. CONTRACTOR shall allow OWNER, OWNER's representatives, agents and employees such access to the site as many be necessary to enable OWNER to exercise the rights and remedies under this paragraph. All direct, indirect and consequential costs of OWNER in exercising such rights and remedies will be charged against CONTRACTOR in an amount approved as to reasonableness by ENGINEER, and a Change Order will be issued incorporating the necessary revisions in the Contract Documents with respect to the Work; and OWNER shall be entitled to an appropriate decrease in the Contract Price, and, if the parties are unable to agree as to the amount thereof, OWNER may make a claim therefore as provided in Article 11. Such direct, indirect and consequential costs will include but not be limited to fees and charges of engineers, architects, attorneys and other professionals, all court and arbitration costs and all costs of repair and replacement of work of others destroyed or damaged by correction, removal or replacement of CONTRACTOR's *defective* Work. CONTRACTOR shall not be allowed an extension of the Contract Time because of any delay in performance of the Work attributable to the exercise by OWNER of OWNER's rights and remedies hereunder.

ARTICLE 14 - PAYMENTS TO CONTRACTOR AND COMPLETION

Schedule of Values:

14.1 The schedule of values established as provided in paragraph 2.8 will serve as the basis for progress payments and will be incorporated into a form of Application for Payment acceptable to ENGINEER. Progress payments on account of Unit Price Work will be based on the number of units completed.

Application for Progress Payment:

14.2 At least twenty days before each progress payment is scheduled (but not more often than once a month), CONTRACTOR shall submit to ENGINEER for review an Application for Payment filled out and signed by CONTRACTOR covering the Work completed as of the date of the Application and accompanied by such supporting documentation as is required by the Contract Documents. If payment is requested on the basis of materials and equipment not incorporated in the Work but delivered and suitably stored at the site or at another location agreed to in writing, the Application for Payment shall also be accompanied by a bill of sale, invoice or other documentation warranting that OWNER has received the materials and equipment free and clear of all liens, charges, security interests and encumbrances (which are hereinafter in these General Conditions referred to as "Liens") and evidence that the materials and equipment are covered by appropriate property insurance and other arrangements to protect OWNER's interest therein, all of which will be satisfactory to OWNER. The amount of retainage with respect to progress payments will be as stipulated in the Supplementary Conditions.

CONTRACTOR's Warranty of Title:

14.3 CONTRACTOR warrants and guarantees that title to all Work, materials and equipment covered by any Application for Payment, whether incorporated in the Project or not, will pass to OWNER no later than the time of payment free and clear of all Liens.

Review of Applications for Progress Payment:

14.4 ENGINEER will, within ten days after receipt of each Application for Payment, either indicate in writing a recommendation of payment and present the Application to OWNER, or return the Application to CONTRACTOR indicating in writing ENGINEER's reasons for refusing to recommend payment. In the latter case, CONTRACTOR may make the necessary corrections and resubmit the Application. Thirty days after presentation of the Application for Payment with ENGINEER's recommendation, the amount recommended will (subject to the provisions of the last sentence of paragraph 14.7) become due and when due will be paid by OWNER to CONTRACTOR.

14.5 ENGINEER's recommendation of any payment requested in an Application for Payment will constitute a representation by ENGINEER to OWNER, based on ENGINEER's on-site observations of the Work in progress as an experienced and qualified design professional and on ENGINEER's review of the Application for Payment and the accompanying data and schedules that the Work has progressed to the point indicated; that, to the best of ENGINEER's knowledge, information and belief, the quality of the Work is in accordance with the Contract Documents (subject to an evaluation of the Work as a functioning whole prior to or upon Substantial Completion, to the results of any subsequent tests called for in the Contract Documents, to a final determination of quantities and classifications for Unit Price Work under paragraph 9.10, and to any other qualifications stated in the recommendation); and that CONTRACTOR is entitled to

payment of the amount recommended. However, by recommending any such payment ENGINEER will not thereby be deemed to have represented that exhaustive or continuous on-site inspections have been made to check the quality or the quantity of the Work beyond the responsibilities specifically assigned to ENGINEER in the Contract Documents or that there may not be other matters or issues between the parties that might entitle CONTRACTOR to be paid additionally by OWNER or OWNER to withhold payment to CONTRACTOR.

14.6 ENGINEER's recommendation of final payment will constitute an additional representation by ENGINEER to OWNER that the conditions precedent to CONTRACTOR's being entitled to final payment as set forth in paragraph 14.13 have been fulfilled.

14.7 ENGINEER may refuse to recommend the whole or any part of any payment if, in ENGINEER's opinion, it would be incorrect to make such representations to OWNER. ENGINEER may also refuse to recommend any such payment, or, because of subsequently discovered evidence or the results of subsequent inspections or tests, nullify any such payment previously recommended, to such extents as may be necessary in ENGINEER's opinion to protect OWNER from loss because:

14.7.1 the Work is *defective*, or completed Work has been damaged requiring correction or replacement.

14.7.2 the Contract Price has been reduced by Written Amendment or Change Order,

14.7.3 OWNER has been required to correct *defective* Work or complete Work in accordance with paragraph 13.14, or

14.7.4 of ENGINEER's actual knowledge of the occurrence of any of the events enumerated in paragraphs 15.2.1 through 15.2.9 inclusive.

OWNER may refuse to make payment of the full amount recommended by ENGINEER because claims have been made against OWNER on account of CONTRACTOR's performance or furnishing of the Work or Liens have been filed in connection with the Work or there are other items entitling OWNER to a set-off against the amount recommended, but OWNER must give CONTRACTOR immediate written notice (with a copy to ENGINEER) stating the reasons for such action.

Substantial Completion:

14.8 When CONTRACTOR considers the entire Work ready for its intended use CONTRACTOR shall notify OWNER and ENGINEER in writing that the entire Work is substantially complete (except for items specifically listed by CONTRACTOR as incomplete) and request that ENGINEER issue a certificate of Substantial Completion. Within a reasonable time thereafter, OWNER, CONTRACTOR and ENGINEER shall make an inspection of the Work to determine the status of completion. If ENGINEER does not consider the Work substantially complete, ENGINEER will notify CONTRACTOR in writing giving the reasons therefore. If ENGINEER considers the Work substantially complete ENGINEER will prepare and deliver to OWNER a tentative certificate of Substantial Completion which shall fix the date of Substantial Completion. There shall be attached to the

certificate a tentative list of items to be completed or corrected before final payment. OWNER shall have seven days after receipt of the tentative certificate during which to make written objection to ENGINEER as to any provisions of the certificate or attached list. If, after considering such objections, ENGINEER concludes that the Work is not substantially complete, ENGINEER will within fourteen days after submission of the tentative certificate to OWNER notify CONTRACTOR in writing, stating the reasons therefore. If, after consideration of OWNER's objections, ENGINEER considers the Work substantially complete, ENGINEER will within said fourteen days execute and deliver to OWNER and CONTRACTOR a definitive certificate of Substantial Completion (with a revised tentative list of items to be completed or corrected) reflecting such changes from the tentative certificate as ENGINEER believes justified after consideration of any objections from OWNER. At the time of delivery of the tentative certificate of Substantial Completion ENGINEER will deliver to OWNER and CONTRACTOR a written recommendation as to division of responsibilities pending final payment between OWNER and CONTRACTOR with respect to security, operation, safety, maintenance, heat, utilities, insurance and warranties. Unless OWNER and CONTRACTOR agree otherwise in writing and so inform ENGINEER prior to ENGINEER's issuing the definitive certificate of Substantial Completion, ENGINEER's aforesaid recommendation will be binding on OWNER and CONTRACTOR until final payment.

14.9 OWNER shall have the right to exclude CONTRACTOR from the Work after the date of Substantial Completion, but OWNER shall allow CONTRACTOR reasonable access to complete or correct items on the tentative list.

Partial Utilization:

14.10 Use by OWNER of any finished part of the Work, which has specifically been identified in the Contract Documents, or which OWNER, ENGINEER and CONTRACTOR agree constitutes a separately functioning and useable part of the Work that can be used by OWNER without significant interference with CONTRACTOR's performance of the remainder of the Work, may be accomplished prior to Substantial Completion of all the Work subject to the following:

14.10.1 OWNER at any time may request CONTRACTOR in writing to permit OWNER to use any such part of the Work which OWNER believes to be ready for its intended use and substantial complete. If CONTRACTOR agrees, CONTRACTOR will certify to OWNER and ENGINEER that said part of the Work is substantially complete and request ENGINEER to issue a certificate of Substantial Completion for that part of the Work. CONTRACTOR at any time may notify OWNER and ENGINEER in writing that CONTRACTOR considers any such part of the Work ready for its intended use and substantially complete and request ENGINEER to issue a certificate of Substantial Completion for that part of the Work. Within a reasonable time after either such request, OWNER, CONTRACTOR and ENGINEER shall make an inspection of that part of the Work to determine its status of completion. If ENGINEER does not consider that part of the

Work to be substantially complete, ENGINEER will notify OWNER and CONTRACTOR in writing giving the reasons therefore. If ENGINEER considers that part of the Work to be substantially complete, the provisions of paragraphs 14.8 and 14.9 will apply with respect to certification of Substantial Completion of that part of the Work and the division or responsibility in respect thereof and access thereto.

14.10.2 OWNER may at any time request CONTRACTOR in writing to permit OWNER to take over operation of any such part of the Work although it is not substantially complete. A copy of such request will be sent to ENGINEER and within a reasonable time thereafter OWNER, CONTRACTOR and ENGINEER shall make an inspection of that part of the Work to determine its status of completion and will prepare a list of the items remaining to be completed or corrected thereon before final payment. If CONTRACTOR does not object in writing to OWNER and ENGINEER that such part of the Work is not ready for separate operation by OWNER, ENGINEER will finalize the list of items to be completed or corrected and will deliver such list to OWNER and CONTRACTOR together with a written recommendation as to the division of responsibilities pending final payment between OWNER and CONTRACTOR with respect to security, operation, safety, maintenance, utilities, insurance warranties and guarantees for that part of the Work which will become binding upon OWNER and CONTRACTOR at the time when OWNER takes over such operation (unless they shall have otherwise agreed in writing and so informed ENGINEER). During such operation and prior to Substantial Completion of such part of the Work, OWNER shall allow CONTRACTOR reasonable access to complete or correct items on said list and to complete other related Work.

14.10.3 No occupancy or separate operation of part of the Work will be accomplished prior to compliance with the requirements of paragraph 5.15 in respect of property insurance.

Final Inspection:

14.11 Upon written notice from CONTRACTOR that the entire Work or an agreed portion thereof is complete, ENGINEER will make a final inspection with OWNER and CONTRACTOR and will notify CONTRACTOR in writing of all particulars in which this inspection reveals that the Work is incomplete or *defective*. CONTRACTOR shall immediately take such measures as are necessary to remedy such deficiencies.

Final Application for Payment:

14.12 After CONTRACTOR has completed all such corrections to the satisfaction of ENGINEER and delivered all maintenance and operating instruction, schedules, guarantees, Bonds, certificates of inspection, marked-up record documents (as provided in paragraph 6.19) and other documents - all as required by the Contract Documents, and after ENGINEER

has indicated that the Work is acceptable (subject to the provisions of paragraph 14.16), CONTRACTOR may make application for final payment following the procedure for progress payments. The final Application for Payment shall be accompanied by all documentation called for in the Contract Documents, together which complete and legally effective releases of waivers (satisfactory to OWNER) of all Liens arising out of or filed in connection with the Work. In lieu thereof and as approved by OWNER, CONTRACTOR may furnish receipts or leases in full; an affidavit of CONTRACTOR that the releases and receipts include all labor, services, material and equipment for which a Lien could be filed, and that all payrolls, material and equipment bills, and other indebtedness connected with the Work for which OWNER or OWNER's property might in any way be responsible, have been paid or otherwise satisfied; and consent of the surety, if any, to final payment. If any Subcontractor of Supplier fails to furnish a release or receipt in full, CONTRACTOR may furnish a Bond or other collateral satisfactory to OWNER to indemnify OWNER against any Lien.

Final Payment and Acceptance:

14.13 If, on the basis of ENGINEER's observation of the Work during construction and final inspection, and ENGINEER's review of the final Application for Payment and accompanying documentation - all as required by the Contract Documents, ENGINEER is satisfied that the Work has been completed and CONTRACTOR's other obligations under the Contract Documents have been fulfilled, ENGINEER will, within ten days after receipt of the final Application for Payment, indicate in writing ENGINEER's recommendation of payment and present the Application to OWNER for payment. Thereupon ENGINEER will give written notice to OWNER and CONTRACTOR that the Work is acceptable subject to the provisions of paragraph 14.16. Otherwise, ENGINEER will return the Application to CONTRACTOR, indicating in writing the reasons for refusing to recommend final payment, in which case CONTRACTOR shall make the necessary corrections and resubmit the Application. Thirty days after presentation to OWNER of the Application and accompanying documentation, in appropriate form and substance, and with ENGINEER's recommendation and notice of acceptability, the amount recommended by ENGINEER will become due and will be paid by OWNER to CONTRACTOR.

14.14 If, through no fault of CONTRACTOR, final completion of the Work is significantly delayed and if ENGINEER so confirms, OWNER shall, upon receipt of CONTRACTOR's final Application for Payment and recommendation of ENGINEER, and without terminating the Agreement, make payment of the balance due for that portion of the Work fully completed and accepted. If the remaining balance to be held by OWNER for Work not fully completed or corrected is less than the retainage stipulated in the Agreement, and if Bonds have been furnished as required in paragraph 5.1, the written consent of the surety to the payment of the balance due for that portion of the Work fully completed and accepted shall be submitted by CONTRACTOR to ENGINEER with the Application for such payment. Such payment shall be made under the terms and conditions governing final payment, except that it shall not constitute a waiver of claims.

Contractor's Continuing Obligation:

14.15 CONTRACTOR's obligation to perform and complete the Work in accordance with the Contract Documents shall be absolute. Neither recommendation of any progress or final payment by ENGINEER, nor the issuance of a certificate of Substantial Completion, nor any payment by OWNER to CONTRACTOR under the Contract Documents, nor any use or occupancy of the Work or any part thereof by OWNER, nor any act of acceptance by OWNER nor any failure to do so, nor any review and approval of a Shop Drawing or sample submission, nor the issuance of a notice of acceptability by ENGINEER pursuant to paragraph 14.13, nor any correction of *defective* Work by OWNER will constitute an acceptance of Work not in accordance with the Contract Documents or a release of CONTRACTOR's obligation to perform the Work in accordance with the Contract Documents (except as provided in paragraph 14.16).

Waiver of Claims:

14.16 The making and acceptance of final payment will constitute:

14.16.1 a waiver of all claims by OWNER against CONTRACTOR, except claims arising from unsettled Liens, from *defective* Work appearing after final inspection pursuant to paragraph 14.11 or from failure to comply with the Contract Documents or the terms of any special guarantees specified therein; however, it will not constitute a waiver by OWNER of any rights in respect of CONTRACTOR's continuing obligations under the Contract Documents; and

14.16.2 a waiver of all claims by CONTRACTOR against OWNER other than those previously made in writing and still unsettled.

ARTICLE 15 - SUSPENSION OF WORK AND TERMINATION

_____

Owner May Suspend Work:

15.1 OWNER may, at any time and without cause, suspend the Work or any portion thereof for a period of not more than ninety days by notice in writing to CONTRACTOR and ENGINEER which will fix the date on which Work will be resumed. CONTRACTOR shall resume the Work ion the date so fixed. CONTRACTOR shall be allowed an increase in the Contract Price or an extension of the Contract Time, or both, directly attributable to any suspension if CONTRACTOR makes an approved claim therefore as provided in Articles 11 and 12.

Owner May Terminate:

15.2 Upon the occurrence of any one or more of the following events:

15.2.1 if CONTRACTOR commences a voluntary case under any chapter of the Bankruptcy Code (Title 11, United States Code), as now or hereafter in effect, or if CONTRACTOR takes any equivalent or similar action by filing a petition or otherwise under any other federal or state law in effect at such time relating to the bankruptcy or insolvency;

15.2.2 if a petition if filed against CONTRACTOR under any chapter of the Bankruptcy Code as now or hereafter in effect at the time of filing, or if a petition is filed seeking any such equivalent or similar relief against CONTRACTOR under any other federal or state law in effect at the time relating to bankruptcy or insolvency;

15.2.3 if CONTRACTOR makes a general assignment for the benefit or creditors;

15.2.4 if a trustee, receiver, custodian or agent of CONTRACTOR is appointed under applicable law or under contract, whose appointment or authority to take charge or property of CONTRACTOR is for the purpose of enforcing a Lien against such property or for the purpose of general administration of such property for the benefit of CONTRACTOR's creditors:

15.2.5 if CONTRACTOR admits in writing an inability to pay its debts generally as they become due;

15.2.6 if CONTRACTOR persistently fails to perform the Work in accordance with the Contract Documents (including, but not limited to, failure to supply sufficient skilled workers or suitable materials or equipment or failure to adhere to the progress schedule established under paragraph 2.9 as revised from time to time);

15.2.7 if CONTRACTOR disregards Laws or Regulations of any public body having jurisdiction;

15.2.8 if CONTRACTOR disregards the authority of ENGINEER; or

15.2.9 if CONTRACTOR otherwise violates in any substantial way any provisions of the Contract Documents;

OWNER may, after giving CONTRACTOR (and the surety, if there be one) seven days' written notice and to the extent permitted by Laws and Regulations, terminate the services of CONTRACTOR, exclude CONTRACTOR from the site and take possession of the Work and of all CONTRACTOR's tools, appliances, construction equipment and machinery at the site and use the same to the full extent they could be used by CONTRACTOR (without liability to CONTRACTOR for trespass of conversion), incorporate in the Work all materials and equipment stored at the site or for which OWNER has paid CONTRACTOR but which are stored elsewhere, and finish the Work as OWNER may deem expedient. In such case CONTRACTOR shall not be entitled to receive any further payment until the Work is finished. If the unpaid balance of the Contact Price exceeds the direct, indirect and consequential costs of completing the Work (including but not limited to fees and charges of engineers, architects, attorneys and other professionals and court and arbitration costs) such excess will be paid to CONTRACTOR. If such costs exceed such unpaid balance, CONTRACTOR shall pay the difference to OWNER. Such costs incurred by OWNER will be approved as to reasonableness by ENGINEER and incorporated in a Change Order, but when exercising any rights or remedies under this paragraph OWNER shall

not be required to obtain the lowest price for the Work performed.

15.3 Where CONTRACTOR's services have been so terminated by OWNER, the termination will not affect any rights or remedies of OWNER against CONTRACTOR when existing or which may thereafter accrue. Any retention or payment of moneys due CONTRACTOR by OWNER will not release CONTRACTOR from liability.

15.4 Upon seven days' written notice to CONTRACTOR and ENGINEER, OWNER may, without cause and without prejudice to any other right or remedy, elect to abandon the Work and terminate the Agreement. In such case, CONTRACTOR shall be paid for all Work executed and any expense sustained plus reasonable termination expenses, which will include, but not be limited to, direct, indirect and consequential costs (including, but not limited to, fees and charges of engineers, architects, attorneys and other professionals and court and arbitration costs).

Contractor May Stop Work or Terminate:

15.5 If, through no act or fault of CONTRACTOR, the Work is suspended for a period of more than ninety days by OWNER or under an order of court or other public authority, or ENGINEER fails to act on any Application for Payment within thirty days after it is submitted, or OWNER fails for thirty days to pay CONTRACTOR any sum finally determined to be due, then CONTRACTOR may, upon seven days' written notice to OWNER and ENGINEER, terminate the Agreement and recover from OWNER payment for all Work executed and any expense sustained plus reasonable termination expenses. In addition and in lieu of terminating the Agreement, if ENGINEER has failed to act on an Application for Payment or OWNER has failed to make any payment as aforesaid, CONTRACTOR may upon seven days' written notice to OWNER and ENGINEER stop the Work until payment of all amounts then due. The provisions of this under paragraph 6.29 to carry on the Work in accordance with the progress schedule and without delay during disputes and disagreements with OWNER.

ARTICLE 16 - DISPUTE RESOLUTION

_____

16.1 METHODS AND PROCEDURES

In an effort to resolve any conflicts that arise during the construction of the project or following the completion of the project, the OWNER and the CONTRACTOR agree that all disputes between them arising out of or relating to this Agreement shall be submitted to nonbinding mediation, unless the parties mutually agree otherwise.

The OWNER and the CONTRACTOR further agree to include a similar mediation provision in all agreements with independent contractors and consultants retained for the project and to require all independent contractors and consultants also to include a similar mediation provision in all agreements with subcontractors, subconsultants, suppliers or fabricators so retained, thereby providing for mediation as the primary method for dispute resolution between the parties to those agreements.

ARTICLE 17 - MISCELLANEOUS

_____

Giving Notice:

17.1 Whenever any provision of the Contract Documents requires the giving of written notice, it will be deemed to have been validly given if delivered in person to the individual or to a member of the firm or to an officer of the corporation for whom it is intended, or if delivered at or sent by registered or certified mail, postage prepaid, to the last business address known to the giver of the notice.

Computation of Time:

17.2.1 When any period of time is referred to in the Contract Documents by days, it will be computed to exclude the first and include the last day of such period. If the last day of any such period falls on a Saturday or Sunday or on a day made a legal holiday by the law of the applicable jurisdiction, such day will be omitted from the computation.

17.2.2 A calendar day of twenty-four hours measured from midnight to the next midnight shall constitute a day.

General:

17.3 Should OWNER or CONTRACTOR suffer injury or damage to person or property because of any error, omission or act of the other party or of any of the other party's employees or agents or others for whose acts the other party is legally liable, claim will be made in writing to the other party within a reasonable time of the firs observance of such injury or damage. The provisions of this paragraph 17.3 shall not be construed as a substitute for or a waiver of the provisions of any applicable statute of limitations or repose.

17.4 The duties and obligations imposed by these General Conditions and the rights and remedies available hereunder to the parties hereto, and, in particular but without limitation, the warranties, guarantees and obligations imposed upon CONTRACTOR by paragraphs 6.30, 13.1, 13.12, 13.14, 14.3 and 15.2 and all of the rights and remedies available to OWNER and ENGINEER thereunder, are in addition to, and are not to be construed in any way as a limitation of, any rights and remedies available to any or all of them which are otherwise imposed or available by Laws or Regulations, by special warranty or guarantee or by other provisions of the Contract Documents, and the provisions of this paragraph will be as effective as if repeated specifically in the Contract Documents in connection with each particular duty, obligation, right and remedy to which they apply. All representations, warranties and guarantees made in the Contract Documents will survive final payment and termination or completion of the Agreement.

SECTION 00800
SUPPLEMENTARY CONDITIONS

These Supplementary Conditions amend or supplement the Standard General Conditions of the Construction Contract and other provisions of the Contract Documents as indicated below. All provisions that are not so amended or supplemented remain in full force and effect.

The terms used in these Supplementary Conditions will have the meanings indicated in the General Conditions. Additional terms used in these Supplementary Conditions have the meanings stated below, which are applicable to both the singular and plural thereof.

TABLE OF CONTENTS

		Page
SC-2.3	Commencement of Contract Times; Notice to Proceed	1
SC-2.4	Starting the Project	1
SC-2.5	Before Starting Construction, Adjustment of Discrepancies	2
SC-2.7	Certificates of Insurance	2
SC-4.2.1	Physical Conditions, Explorations and Reports Used by Engineer	2
SC-4.3.3	Physical Conditions, Underground Facilities, Drawings Used by Engineer	2
SC-5.4	Contractor's Liability Insurance	2
SC-6.4	Labor, Materials, & Equipment, Contractor's Necessary Facilities	4
SC-6.7.3	Substitutes and "Or-Equals", Engineer's Evaluation	4
SC-6.7.4-6.7.6	Substitutes and "Or-Equals", Submission and Selection	4
SC-6.8.3	Contractors Responsibilities, Subcontract Amount	5
SC-6.21	Contractor's Responsibilities, Accidents	5
SC-6.33	Contractor's Responsibilities, Indemnification, Subcontractors	5
SC-9.3	Project Representative	5
SC-11.9.2	Unit Price Work	6
SC-12.2	Changes of Contract Time, Delays, Abnormal Weather Conditions	6
SC-12.3.1	Liquidated Damages	7
SC-13.2	Access to the Work	7
SC-17.5	Miscellaneous, High Voltage Act	7
SC-17.6	Miscellaneous, Safety Requirements	7
SC-17.7	Miscellaneous, Contractor's Status	7

SC-2.3. Delete Paragraph 2.3 in its entirety and insert the following in its place:

The Contract Time will commence to run on the day indicated in the Notice to Proceed. A Notice to Proceed may be given at any time within 30 days after the Effective Date of the Agreement.

SC-2.4. Delete Paragraph 2.4 in its entirety and insert the following in its place:

The Contractor shall start to perform the Work within 10 calendar days of the date when the Contract Time commences to run, but no Work shall be done at the site prior to the date on which the Contract Time commences to run.

SC-2.5. Add the following to the end of Paragraph 2.5:

Any known discrepancy that Contractor adjusts without requesting interpretation or clarification from the Engineer shall be made at the risk of the Contractor, and Contractor shall bear all expenses arising from complications from such adjustment.

SC-2.7. Add the following to the end of Paragraph 2.7:

Failure of the Owner to demand such certificates or other evidence of full compliance with these insurance requirements or failure of the Owner to identify a deficiency from evidence provided shall not be construed as a waiver of Contractor's obligation to maintain such insurance.

SC-4.2.1 Add the following to the end of Paragraph 4.2.1

In the preparation of Drawings and Specifications, Engineer has relied upon the following reports of explorations and test of sub-surface conditions at the site of the Work:

4.2.1.1 None

SC-4.3.3 Add a new Paragraph immediately after Paragraph 4.3.2:

4.3.3 In the preparation of Drawings and Specifications, Engineer has relied upon the following drawings of physical conditions in or relating to existing surface and sub-surface structures (except Underground Utilities) which are contiguous to the site of the Work:

4.3.3.1 None

SC-5.4. Delete Paragraph 5.4 and the heading entitled "Contractual Liability Insurance:" in its entirety and insert the following in its place:

5.4 The limits of liability for insurance required by Paragraph 5.3 of the General Conditions shall provide coverage for not less than the following amounts or greater where required by Laws and Regulations:

5.4.1. Workers' Compensation, and related coverages under Paragraphs 5.3.1 and 5.3.2 of the General Conditions:

5.4.1.1.	State:	Statutory
5.4.1.2.	Applicable Federal (e.g., Longshoremen's)	Statutory
5.4.1.3.	Employer's Liability	$ 200,000

5.4.1.4. Contractor shall show Owner as additional insured.

5.4.2. Contractor's Comprehensive General Liability under Paragraphs 5.3.3 through 5.3.6 of the General Conditions:

5.4.2.1 Combined Single Limit for Bodily Injury and Property Damage

$1,000,000	Each Occurrence
Or combined single limit	$2,000,000
General Aggregate	$2,000,000
Operations Aggregate	$2,000,000

5.4.2.2. Property Damage liability insurance will provide Explosion, Collapse and Underground coverages where applicable.

5.4.2.3. Personal Injury, with employment exclusion deleted

$1,000,000	Annual Aggregate
$1,000,000	Each Occurrence

5.4.3. Comprehensive Automobile Liability under Paragraph 5.3.7 of the General Conditions:

5.4.3.1. Bodily Injury:

$1,000,000	Each Person
$2,000,000	Each Occurrence

5.4.3.2 Property Damage:

$1,000,000	Each Occurrence
Or combined single limit	$2,000,000

5.4.4 Builders Risk Insurance (Fire and Extended Coverage):

5.4.4.1 100% completed value based on the insurable portion of the project

5.4.4.2 Policy must protect the interests of the Owner, Contractor, and Sub-Contractors against loss by fire, vandalism, malicious mischief, and all hazards included in a standard "All Risk" Coverage endorsement. Policies shall be in the name of the Owner and Contractor.

5.4.5 The comprehensive general liability insurance will include contractual liability insurance applicable to CONTRACTOR's obligations under paragraphs 6.30 and 6.31 of the General Conditions. Contractual Liability coverage shall provide coverage for not less than the following amounts:

5.4.5.1. Bodily Injury:

$500,000	Each Occurrence

5.4.5.2 Property Damage:

$100,000	Each Occurrence
$ N/A	Annual Aggregate

SC-6.4 Add the following language at the end of paragraph 6.4:

Contractor shall arrange for all necessary services through the local agencies at his own expense.

SC-6.7.3. Delete Paragraph 6.7.3 in its entirety and insert the following in its place:

6.7.3 ENGINEER will be allowed a reasonable time within which to evaluate each proposed substitute/ "or-equal" item. Complete written applications as detailed in Section 6.7 of the General Conditions must be received by ENGINEER at least fifteen (15) calendar days prior to the date (by end-of-business) for receipt of Bids. The burden of proof of the merit of the substitute/ "or-equal" item is upon the Bidder. ENGINEER will be the sole judge of acceptability, and ENGINEER'S decision of approval or disapproval of an item will be final. If ENGINEER approves any substitute/ "or-equal" item, such approval will be set forth in an Addendum issued to prospective Bidders. Bidders shall not rely upon approvals made in any other manner.

SC-6.7.4-6 Add new paragraphs immediately after Paragraph 6.7.3:

6.7.4 Submittals for substitute/ "or-equal" items shall include illustrative drawings, specifications, descriptive brochures, installation lists, weights, metal thickness of principal components, drive arrangements, torques, power requirements, performance curves, installation requirements, availability of spare parts, local service capability, and other items necessary for the ENGINEER to determine that the intent of the Specifications is to be met. Submittal must also include an enumeration of any and all changes required in the contract documents for incorporation of the proposed item. Incomplete submittals will not be reviewed or commented upon.

6.7.5 Submitted items that are determined to be “equal” or acceptable substitute to the named equipment or item in the specifications will be approved and commented upon by addendum to notify all Bidders of approval and any stipulations for the products use in preparation of his/her bid.

SC-6.8.3 Add a new paragraph immediately after Paragraph 6.8.2:

6.8.3. The Contractor shall not award work valued at more than fifty (50%) percent of the Contract Price to Subcontractor(s), without prior written approval of the Owner.

SC-6.21 Add the following language at the end of paragraph 6.21:

The Contractor shall provide, at the site, such equipment and medical facilities as are necessary to supply first-aid service to anyone who may be injured in connection with the work. The Contractor must report in writing to the Engineer all accidents whatsoever arising out of, or in connection with, the performance of the work, whether on or adjacent to the site, which causes death, personal injury or property damages, giving full details and statement of witnesses. In addition, if death or serious injuries or serious damages are caused, the accident shall be reported immediately by telephone or messenger to the Contractor and any subcontractor so that Contractor may promptly report the facts to the Engineer, giving full details of the accident. The Contractor shall advise his superintendent and foreman, who are on the site of the work, the name of the hospital and phone number and the name and phone number of the doctor he proposes to use in case of an accident.

SC-6.33 Add a new paragraph immediately after Paragraph 6.32:

6.33 Contractor shall require any and all subcontractors to conform to the obligations under paragraph 6.30 prior to commencing any work.

SC-9.3 Add the following language at the end of paragraph 9.3:

The Owner reserves the right to provide Resident Project Representative services for this project through the services of the Engineer. The Duties, Responsibilities, and Limitations of Authority of the Resident Project Representative will be as stated in the Agreement Between Owner and Engineer, executed for this specific Project.

SC-11.9.2 Add the following language at the end of paragraph 11.9.2:

Direct payment will only be made items specifically listed in the Bid Form, and the cost of any other work will be included in the unit price for the item to which it relates.

SC-12.2 Add the following sub-Paragraphs to Paragraph 12.2

12.2.1 For the purposes of this contract, abnormal weather conditions shall be defined as wet weather conditions that exceed the normal, reasonably expected adverse weather days for that particular place at that particular time of year. Extension of time for abnormal weather conditions will be granted for those days where precipitation is one-eighth (0.125) inches or greater and where the number of such days exceed the normal, reasonably expected adverse weather days in that particular month. No reduction in Contract Time will be required for calendar months with less than the normal adverse weather days.

12.2.2 The determination of normal adverse weather days will be based on the average number of calendar days over the last five years in which more than one-eight (0.125) inches of rain fell as measured by the "Georgia Automated Environmental Monitoring Network" station nearest to the project site, for that particular month. This data may be accessed via the following website:

http://www.weather.uga.edu

12.2.3 For the purposes of this contract, normal adverse weather days, as calculated by the method described in Paragraph 12.2.2 are listed below by month:

January	8	July	8
February	7	August	6
March	7	September	5
April	4	October	3
May	6	November	4
June	8	December	6

12.2.4 Requests for extension of Contract Time due to abnormal weather conditions must be submitted to Engineer with the monthly pay request for the month in which the delays occurred. Failure to request such extension with the pay request may invalidate the Contractor's right to an extension for these delays.

SC-12.3.1 Add the following sub-Paragraph to Paragraph 12.3:

12.3.1 If the Contractor fails to prosecute the work with such diligence as will insure the completion of each portion of the work within the Contract Time, plus any extensions made in accordance with Article 12 of the General Conditions, and if the Owner does not exercise his reservations as

set forth in Article 13 of the General Conditions, the Contractor shall continue the work, in which event, actual damages for the delay will be impossible to determine. In lieu thereof, liquidated damages in the amount of $500 per calendar day for each day that the work is delayed beyond the contract completion will be assessed to the Contractor until the work is completed.

SC-13.2 Delete Paragraph 13.2 in its entirety and insert the following in its place:

Engineer and Engineer's representatives, other representative of Owner, testing agencies, the Georgia Department of Natural Resources, the Environmental Protection Division, the Department of Labor, and any other governmental agencies with jurisdictional interests will have access to the Work at reasonable times for their observation, inspection, and testing. Contractor shall provide proper and safe conditions for such access.

SC-17.5 Add the following new Paragraphs immediately after Paragraph 17.4:

17.5 The Contractor acknowledges the requirement of the High Voltage Act of the General Assembly of Georgia by execution of the Agreement.

17.6 The Contractor shall comply with the Department of Labor Safety and Health Regulation for Construction promulgated under the Occupational Safety and Health Act of 1970 (PL 91-596) and under Section 107 of the Contract Work and Safety Standards Act (PL 91-54). These regulations are administered by the Department of Labor and the Contractor shall allow access to the project to personnel from that Department.

17.7 The Contractor shall occupy the status of an Independent Contractor and the Contractor's employees are not employees of the Owner.

GEORGIA ENVIRONMENTAL FINANCE AUTHORITY

SUPPLEMENTAL GENERAL CONDITIONS

for

FEDERALLY ASSISTED STATE REVOLVING FUND CONSTRUCTION CONTRACTS

December 7, 2022

The following standard language must be incorporated into construction contract documents and in all solicitations for offers and bids for all construction contracts or subcontracts in excess of $10,000 to be funded in whole or in part by the federally-assisted State Revolving Fund in the state of Georgia.

These Supplemental General Conditions shall not relieve the participants in this project of responsibility to meet any requirements of other portions of this construction contract or of other agencies, whether these other requirements are more or less stringent. The requirements in these Supplemental General Conditions must be satisfied for work to be funded with the State Revolving Fund.

TABLE OF CONTENTS

Instructions and General Requirements	3
DBE Compliance Form	4
DBE Compliance Checklist	6
Six Good Faith Efforts	7
Resources for Identifying DBE Subcontractors	8
Certification Regarding Equal Employment Opportunity	9
Certification Regarding Debarment, Suspension, and Other Responsible Matters	10
Changes to Approved Subcontractors Form	11
DBE Annual Report Form (5700-52A)	12
Special Provisions	13
Equal Employment Opportunity (EEO) Notice	14
EEO Construction Contract Specifications (Executive Order 11246)	15
Davis-Bacon and Related Acts	15
Wage Rate Determination (and links for forms, posters, etc.)	15
Certified Payroll Review Checklist	16

INSTRUCTIONS AND GENERAL REQUIREMENTS

It is the policy of the State Revolving Loan Fund (SRF) to promote a fair share of subcontract, materials, equipment, and service awards to small, minority, and women-owned businesses for equipment, supplies, construction, and services. Compliance with these contract provisions is required for project costs to be eligible for SRF funding. The fair share objective is a goal, not a quota. Failure on the part of the apparent successful bidder to submit required information to the loan recipient (Owner) may be considered by the Owner in evaluating whether the bidder is responsive to bid requirements.

THE PRIME CONTRACTOR MUST SUBMIT THE FOLLOWING ITEMS TO THE OWNER:

A. Before beginning the work of any contract:

1) **DBE Compliance Form and related documentation.** The Owner must submit this information to the Georgia Environmental Finance Authority (GEFA) to demonstrate compliance with Disadvantaged Business Enterprise (DBE) requirements. GEFA concurrence is recommended prior to award of the construction contract and is required prior to commencement of any SRF-funded construction. (Pages GEFA-4 and 5)
2) **Certification Regarding Equal Employment Opportunity.** This form is required for the Prime Contractor and for all subcontractors. The Prime Contractor form should be submitted with the DBE Compliance Form, and the subcontractor forms should be submitted as the subcontracts are executed. (Page GEFA-9)
3) **Certification Regarding Debarment, Suspension, and Other Responsible Matters.** This form is required for the Prime Contractor and for all subcontractors. The Prime Contractor form should be submitted with the DBE Compliance Form and the subcontractor forms should be submitted as the subcontracts are executed. (Page GEFA-10)

B. During the performance of the contract:

4) **Changes to Subcontractors Form.** If any changes, substitutions, or additions are proposed to the subcontractors included in previous GEFA concurrences, the Owner must submit this information to GEFA for prior concurrence for the affected subcontract work to be eligible for SRF funding. (Page GEFA-11)
5) **DBE Annual Report.** The Owner must submit this information to GEFA no later than October 20 of any year that the construction contract is active. (Page GEFA-12)
6) **Certified Payrolls.** These should be submitted to the Owner weekly for the Prime Contractor and all subcontractors. The Owner must maintain payroll records and make these available for inspection. Use U.S. Department of Labor form WH-347 or a similar form that contains all the information on the U.S. Department of Labor.

THE OWNER MUST SUBMIT INFORMATION FOR GEFA REVIEW AND CONCURRENCE TO:

Georgia Environmental Finance Authority
47 Trinity Ave SW
Fifth Floor
Atlanta, Georgia 30334
404-584-1000 (phone)
404-584-1069 (fax)
waterresources@gefa.ga.gov

DBE COMPLIANCE FORM

ALL INFORMATION OUTLINED ON THIS FORM IS REQUIRED FOR DBE COMPLIANCE REVIEW. THE PROPOSED PRIME CONTRACTOR AND OWNER SHOULD ENSURE THAT THIS INFORMATION IS COMPLETE PRIOR TO SUBMITTAL.

Loan Recipient _____ **SRF Loan Number** _____

PRIME CONTRACTOR'S AND OWNER'S CERTIFICATIONS:

I certify that the information submitted on and with this form is true and accurate and that this firm has met and will continue to meet the conditions of this construction contract regarding DBE solicitation and utilization. I further certify that criteria used in selecting subcontractors and suppliers were applied equally to all potential participants and that EPA Forms 6100-2 and 6100-3 were distributed to all DBE subcontractors.

_____ **Date**_____
(Prime Contractor signature)

_____
(Printed name and title)

I certify that I have reviewed the information submitted on and with this form and that it meets the requirements of the Owner's State Revolving Fund loan contract.

_____ **Date**_____
(Signature of Owner or Owner's representative)

_____
(Printed name and title)

CONTACT INFORMATION

Owner contact _____

Owner phone number and email _____

Consulting Engineer contact _____

Consulting Engineer phone number and email _____

Proposed Prime Contractor _____

Prime Contractor contact _____

Prime Contractor phone number and email _____

Proposed total contract amount $ _____

Proposed total MBE participation $ _____ **Percentage** _____ **Goal: 4.0 percent**

Proposed total WBE participation $ _____ **Percentage** _____ **Goal: 4.0 percent**

CONTINUED ON NEXT PAGE

Please submit the following with the DBE Compliance Form:

a. List of all committed and uncommitted subcontractors by trade, including company name, address, telephone number, contact person, dollar amount of subcontract, and DBE/MBE/WBE status.

b. Indicate in writing if no solicitations were made because the Prime Contractor intends to use only its own forces to accomplish the work.

c. Proof of certification by EPA, SBA, DOT (or by state, local, tribal, or private entities whose certification criteria match EPA criteria) for each subcontractor listed as a DBE, MBE, or WBE.

d. Documentation of solicitation efforts for prospective DBE firms, such as fax confirmation sheets, copies of solicitation letters and emails, printout of online solicitations, printouts of online search results, and copies and affidavits of publication in newspapers or other publications. (see also, "Six Good Faith Efforts", page GEFA-7).

   i. The Prime Contractor shall use the necessary resources to identify and directly solicit no less than three certified MBE firms and three certified WBE firms to bid in each expected subcontract trade or area. If a diligent and documented search of the recommended directories does not identify three potential certified MBE firms and three potential certified WBE firms, then the Prime Contractor shall post an advertisement in the Owner's local legal organ, the Owner's official website, a regional newspaper in a larger community in the proximity, the Prime Contractor's website, or some other appropriate resource.
   ii. The Prime Contractor is encouraged to follow-up each written, fax, or email solicitation with at least one logged phone call.
   iii. Whenever possible, post solicitations for bids or proposals for a minimum of 30 calendar days before the bid or proposal closing date.

e. Written justification for not selecting a certified DBE subcontractor that submitted a low bid for any subcontract area.

f. Certification By Proposed Prime Contractor or Subcontractor Regarding Equal Employment Opportunity (GEFA-9)

g. Certification By Proposed Prime or Subcontractor Regarding Debarment, Suspension, and Other Responsible Matters. (GEFA-10)

END OF DBE COMPLIANCE FORM

DBE COMPLIANCE CHECKLIST

THE PRIME CONTRACTOR MUST SUBMIT THE FOLLOWING ITEMS TO THE OWNER BEFORE THE WORK BEGINS:

Loan Recipient _____ **SRF Loan Number** _____

Include in Package Submittal

PRIME CONTRACTOR ONLY	TOTAL CONTRACT AMOUNT

ALL SUBCONTRACTORS, INCLUDING DBE FIRMS	TRADE	AMOUNT

ALL SUBCONTRACTORS, INCLUDING DBE FIRMS	TRADE	AMOUNT

DBE SUBCONTRACTORS ONLY	TRADE	AMOUNT

DBE SUBCONTRACTORS ONLY	TRADE	AMOUNT

PRIME CONTRACTOR ONLY *(Not applicable if self-performing all work, with no subcontracting)*

1. **DBE Compliance Form.** The Owner must sign and submit this information to the Georgia Environmental Finance Authority (GEFA) to demonstrate compliance with DBE requirements. GEFA concurrence is recommended prior to award of the construction contract and is required prior to commencement of any SRF-funded construction. **(Pages GEFA-4 and 5**)

2. **Certification Regarding Equal Employment Opportunity**. This form is required for the Prime Contractor and for all subcontractors. The Prime Contractor's form should be submitted with the DBE Compliance Form and the subcontractors' forms should be submitted as the subcontracts are executed. **(Page GEFA-9)**

3. **Certification Regarding Debarment, Suspension, and Other Responsible Matters**. This form is required for the Prime Contractor and for all subcontractors. The Prime Contractor's form should be submitted with the DBE Compliance Form and the subcontractors' forms should be submitted as the subcontracts are executed. **(Page GEFA-10)**

Uncommitted Trades

Documentation of Good Faith Efforts

Newspaper ads		Internet Websites	Fax Confirmation	Copies of Solicitation Emails/letters	Copies of phone logs
PROOF OF CERTIFICATION FOR EACH SUBCONTRACTOR LISTED AS A DBE, MBE, OR WBE					

SIX GOOD FAITH EFFORTS

These good faith efforts are required methods to ensure that DBEs have the opportunity to compete for procurements funded by EPA financial assistance dollars. Such good faith efforts are described as follows:

1. Ensure DBEs are made aware of contracting opportunities to the fullest extent practicable through outreach and recruitment activities. This will include placing DBEs on solicitation lists and soliciting them whenever there are potential sources.

2. Make information on forthcoming opportunities available to DBEs and arrange time frames for contracts and establish delivery schedules, where the requirements permit, in a way that encourages and facilitates participation by DBEs in the competitive process. This includes, whenever possible, posting solicitation for bids or proposals for a minimum of 30 calendar days before the bid or proposal closing date.

3. Consider in the contracting process whether firms competing for large contracts could subcontract with DBEs. This will include dividing total requirements when economically feasible into smaller tasks or quantities to permit maximum participation by DBEs in the competitive process.

4. Encourage contracting with a consortium of DBEs when a contract is too large for one of these firms to handle individually.

5. Use the resources, services, and assistance of the U.S. Department of Transportation (DOT), U.S. Small Business Administration (SBA), and the Minority Business Development Agency of the U.S. Department of Commerce (MBDA).

6. If the Prime Contractor awards subcontracts, it must take the steps described in items (1) through (5) listed above.

Please note that DBEs, MBEs, and WBEs must be certified by EPA, SBA, or DOT (or by state, local, tribal, or private entities whose certification criteria match EPA's). DBEs must be certified to be counted toward the Prime Contractor's MBE/WBE goals. "Self-certified" DBE subcontractors will not be counted toward the Prime Contractor's MBE/WBE goals. Depending upon the certifying agency, a DBE may be classified as a DBE, a Minority Business Enterprise (MBE), or a Women's Business Enterprise (WBE).

The Prime Contractor must employ and document the **Six Good Faith Efforts** for all subcontracts, even if the Prime Contractor has achieved the fair share objectives.

The documentation of solicitations for the **Six Good Faith Efforts** must be detailed to allow for satisfactory review. Such documentation might include fax confirmation sheets, copies of solicitation letters/emails, printouts of the online solicitations, printouts of online search results, and affidavits of publication in newspapers or other publications. The Prime Contractor is encouraged to follow up each written, fax, or email solicitation with at least one logged phone call.

The Prime Contractor should attempt to identify and solicit DBEs in the geographic proximity of the project before soliciting those located farther away.

If a DBE subcontractor fails to complete work under the subcontract for any reason, the Prime Contractor must notify the Owner in writing prior to any termination and must employ the Six Good Faith Efforts described above if using a replacement subcontractor. Any proposed changes from the approved DBE subcontractor list must be reported to the Owner and to GEFA on the *Changes to Approved Subcontractors Form* (GEFA-14) prior to initiation of the action. EPA Forms Nos. 6100-3 and 6100-4 must also be submitted to GEFA for new DBE subcontracts.

RESOURCES FOR IDENTIFYING DBE SUBCONTRACTORS

RESOURCES FOR IDENTIFYING DBE SUBCONTRACTOR'S FOR DIRECT SOLICITATION:

Georgia Department of Transportation (GDOT)
Disadvantaged Business Enterprise Program
404-631-1972
https://www.dot.ga.gov/GDOT/Pages/DBE.aspx

City of Atlanta, Georgia Office of Contract Compliance
404-330-6010
https://www.atlantaga.gov/government/mayor-s-office/executive-offices/office-of-contract-compliance

DeKalb County, Georgia
Office of Purchasing and Contracting
404-371-4730
http://dekalblsbe.info/wordpress1/wp-content/uploads/2016/05/DeKalbCountyCertifiedVendorsListMay10-2016-Final2.pdf

Fulton County, Georgia
Purchasing and Contract Compliance
404-612-5800

Metropolitan Atlanta Rapid Transit Authority (MARTA)
Disadvantaged Business Enterprise Program
404-848-4656

U.S. Environmental Protection Agency
http://www.epa.gov/osbp/dbe_team.htm

For more information about DBE compliance, contact:
waterresources@gefa.ga.gov

NOTES:

(1) The Prime Contractor shall use the necessary resources to identify and directly solicit no less than three certified MBE firms and three WBE firms to bid in each expected subcontract area or trade.
(2) If a diligent and documented search of the recommended directories does not identify three potential certified MBE firms and three potential certified WBE firms, then the Prime Contractor shall post an advertisement in the Owner's local legal organ, the Owner's official website, a regional newspaper in a larger community in the proximity, the Prime Contractor's website, or some other appropriate resource. Whenever possible, post solicitation for bids or proposals for a minimum of 30 calendar days before the bid or proposal closing date.
(3) Expenditures to a DBE that acts merely as a broker or passive conduit of funds, without performing, managing, or supervising the work of its subcontract in a manner consistent with normal business practices may not be counted.
(4) The Prime Contractor should attempt to identify and first solicit DBEs in the geographic proximity of the project before soliciting those located farther away.
(5) Contact GEFA Project Managers at 404-584-1000 or waterresources@gefa.ga.gov for further assistance or resources.

CERTIFICATION BY PROPOSED PRIME CONTRACTOR OR SUBCONTRACTOR REGARDING EQUAL EMPLOYMENT OPPORTUNITY

Proposed Prime Contractor
Proposed Subcontractor

This certification is required pursuant to Executive Order 11246, Part II, Section 203 (b), (30 F.R. 12319-25), (as amended by EO 11375 of Oct. 13, 1967, 32 FR 14303, 3 CFR, 1966–1970 Comp., p. 684; EO 12086 of Oct. 5, 1978, 43 FR 46501, 3 CFR, 1978 Comp., p. 230, EO 13672 of July 21, 2104, 79 FR 42971). Any bidder or prospective prime contractor, or any of the proposed subcontractors, shall state as an initial part of the bid or negotiations of the contract whether it has participated in any previous contract or subcontract subject to the equal opportunity clause; and, if so, whether it has filed all compliance reports due under applicable instructions.

Where the certification indicated that the prime or subcontractor has not filed a compliance report due under applicable instruction, such contractor shall be required to submit a compliance report.

(1) Bidder has participated in a previous contract or subcontract subject to the Equal Opportunity Clause.
YES _____ NO _____

(2) Compliance Reports were required to be filed in connection with such contract or subcontract.
YES _____ NO _____ (If YES, state what reports were filed and with what agency.)

(3) Bidder has filed all compliance reports due under applicable instructions, including SF-100 (EEO-1 Report).
YES _____ NO _____ (If NO, please explain in detail.)

The information above is true and complete to the best of my knowledge and belief. (A willfully false statement is punishable by law – U.S. Code, Title 18, Section 1001.)

_____
PRINTED NAME AND TITLE OF AUTHORIZED REPRESENTATIVE OF CONTRACTOR OR SUBCONTRACTOR

_____ _____
SIGNATURE OF AUTHORIZED REPRESENTATIVE **DATE**

CERTIFICATION BY PROPOSED PRIME CONTRACTOR OR SUBCONTRACTOR REGARDING DEBARMENT, SUSPENSION, AND OTHER RESPONSIBLE MATTERS

Proposed Prime Contractor
Proposed Subcontractor

Under Executive Order 12549 individuals or organizations debarred from participation in federal assistance programs may not receive an assistance award under federal program or sub-agreement there under for $25,000 or more. Accordingly, each recipient of a state loan or a contract (engineering or construction) awarded under a loan must complete the following certification (see 2 CFR §1532.220).

The prospective participant certifies to the best of its knowledge and belief that it and its principals:

(a) Are not presently debarred, suspended, proposed for debarment, declared ineligible, or voluntarily excluded from covered transactions by any federal department or agency.

(b) Have not within a three year period preceding this proposal been convicted of or had a civil judgement rendered against them for commission of fraud or a criminal offense in connection with obtaining, attempting to obtain, or performing a public (federal, state, or local) transaction or contract under a public transaction; violation of federal or state antitrust statutes or commission of embezzlement, theft, forgery, bribery, falsification or destruction of records, making false statements, or receiving stolen property;

(c) Are not presently indicted for or otherwise criminally or civilly charged by a government entity (federal, state, or local) with commission of any of the offenses enumerated in paragraph (1) (b) of this certification; and

(d) Have not within a three-year period preceding this application/proposal had one or more public transactions (federal, state, or local) terminated for cause of default.

I understand that a false statement on this certification may be grounds for rejection of this proposal or termination of the award. (A willfully false statement is punishable by law – U.S. Code, Title 18, Section 1001.)

_____

PRINTED NAME AND TITLE OF AUTHORIZED REPRESENTATIVE OF CONTRACTOR OR SUBCONTRACTOR

_____ _____

SIGNATURE OF AUTHORIZED REPRESENTATIVE **DATE**

_____ **I am unable to certify to the above statements. My explanation is as follows:**

CHANGES TO APPROVED SUBCONTRACTORS FORM

Loan Recipient _____ **SRF Loan Number** _____

CERTIFICATIONS:

I certify that the information submitted on and with this form is true and accurate and that this firm has met and will continue to meet the conditions of this construction contract regarding DBE solicitation and utilization. I further certify that criteria used in selecting subcontractors and suppliers were applied equally to all potential participants.

_____ Date_____
(Prime Contractor signature)

_____
(Printed name and title)

I certify that I have reviewed the information submitted on and with this form and that it meets the requirements of the Owner's State Revolving Fund loan contract.

_____ Date_____
(Signature of Owner or Owner's representative)

_____
(Printed name and title)

GENERAL INFORMATION:

1) If an approved subcontractor is terminated or replaced, please identify this company and briefly state reason.

Subcontractor Name:	**Trade**
Reason Terminated or Replaced	

2) For new or additional subcontractors, list name, trade, address, telephone number, contact person, dollar amount of subcontract, and DBE status.

New Subcontractor Name and Contact Person	**Trade**
Address	**Telephone Number**
Dollar Amount	**DBE Status**

1) Attach proof of certification by EPA, SBA, DOT (or by state, local, tribal, or private entities whose certification criteria match EPA's) for each subcontractor listed as a DBE, MBE, or WBE.

2) Attach documentation of Six Good Faith Efforts solicitation effort for all new subcontracts.

3) Provide justification for not selecting any certified DBE subcontractor that submitted a low bid for any subcontract area.

4) For each subcontractor, attach certifications regarding Equal Employment Opportunity (GEFA-9) and certifications regarding Debarment, Suspension, and Other responsible Matters (GEFA-10)

DBE ANNUAL REPORT
FORM (5700-52A)

This form must be completed by recipients of federal financial assistance for procurement of supplies, equipment, construction, or services. SRF loan recipients are required to submit this report to GEFA by the 20th of October for the previous period of October 1 through September 30. Please submit a "negative" report even if $0 is the amount paid to MBE/WBE subcontractors during the reporting period.

<table>
<tr><th colspan="4">ANNUAL REPORT FORM (5700-52A)</th></tr>
<tr><td colspan="2">1. PRIME CONTRACTOR</td><td colspan="2">2. REPORTING PERIOD (Complete date using current year.)
Period Ending (September 30, _____)</td></tr>
<tr><td colspan="2">3. SUBMIT TO:
Georgia Environmental Finance Authority
Attention: DBE Compliance Coordinator
47 Trinity Ave SW
Fifth Floor
Atlanta, Georgia 30303
waterresources@gefa.ga.gov</td><td colspan="2">4. LOAN RECIPIENT (Name, Address, and Telephone)</td></tr>
<tr><td>5. LOAN RECIPIENT (OWNER)
REPORTING CONTACT</td><td>PHONE:</td><td>6. TYPE OF FEDERAL FINANCIAL ASSISTANCE PROGRAM (Check one)
CWSRF _____ DWSRF_____</td><td>7. SRF LOAN NUMBER</td></tr>
<tr><td colspan="2">8. CONTRACTOR NAME AND TOTAL CONSTRUCTION CONTRACT AMOUNT</td><td colspan="2">9. ACTUAL DOLLAR AMOUNT PAIDTO MBE/WBE SUBCONTRACTORS THIS PERIOD
$ MBE_____ $ WBE_____ NEGATIVE REPORT ($0) ___</td></tr>
<tr><td colspan="2">10. RECIPIENT'S MBE/WBE GOALS
MBE 4.0 % WBE 4.0 %</td><td colspan="2">11. TOTAL DOLLARS SPENT THIS PERIOD
MBE $_____
WBE $_____
NON MBE/WBE $_____
TOTAL $ _____</td></tr>
<tr><td colspan="2">12. NAME AND TITLE OF AUTHORIZED REPRESENTATIVE OF LOAN RECIPIENT (OWNER).</td><td>13. SIGNATURE OF AUTHORIZED REPRESENTATIVE OF LOAN RECIPIENT.</td><td>14. DATE</td></tr>
<tr><th colspan="4">MBE/WBE PAYMENTS MADE DURING PERIOD</th></tr>
<tr><td colspan="2">NAME AND ADDRESS of DBE (SUB)CONTRACTOR (indicate if MBE or WBE firm)</td><td colspan="2">TOTAL DOLLAR AMOUNT PAID AND DATE PAID
$_____ DATE_____</td></tr>
<tr><td colspan="2"></td><td colspan="2"></td></tr>
<tr><td colspan="2"></td><td colspan="2"></td></tr>
<tr><td colspan="2"></td><td colspan="2"></td></tr>
</table>

GEFA-12

SPECIAL PROVISIONS

(a) The Prime Contractor is required to pay its subcontractors in accordance with the Georgia Prompt Payment Act (OCGA 13-11).

(b) The Prime Contractor is required to insert the entirety of the Davis Bacon contract requirements into all subcontracts.

(c) Sewer line and water line crossing of all roads and streets shall be done in accordance with the Georgia Department of Transportation (D.O.T.) Policies and Procedures and must comply with the Ga. D.O.T. Standard Specifications, Construction of Roads and Bridges, 1993 Edition.

(d) Construction shall be carried out so as to prevent bypassing of wastewater flow and to prevent interruption of drinking water treatment during construction. EPD must receive written notification prior to any reduction in the level of treatment and must approve all temporary modifications to the treatment process prior to the activity.

(e) Erosion and Sedimentation Control shall be accomplished in accordance with the Georgia Erosion and Sedimentation Control Act of 1975 as currently amended and NPDES General Permits (Storm Water from Construction Sites). See also epd.georgia.gov and gaswcc.georgia.gov for information regarding permits.

(f) Use of Chemicals: All chemicals used during project construction or furnished for project operation, whether herbicide, pesticide, disinfectant, polymer reactant or of other classification, must show approval of either EPA or USDA. Use of all such chemicals and disposal of residues shall be in conformance with state and local regulations as appropriate.

(g) It is the duty of the Prime Contractor, the Owner and the Engineer to ensure the construction of the project, including the letting of contracts in connection therewith, shall comply with all applicable laws and regulations and requirements of the United States of America or any agency thereof, the state of Georgia or any agency thereof, territorial, or any local government laws or political subdivision and ordnances to the extent that such requirements do not conflict with federal laws and this subchapter.

(h) EPD, EPA, and GEFA shall have access to the site and the project work at all times.

BONDS

Bonding requirements for Contracts of $100,000 or less are contained in the General Conditions. Bond requirements of contracts in excess of $100,000 are:

1. Bid guarantee equivalent to five percent of the bid price. The bid guarantee shall consist of a firm commitment such as a certified check or bid bond submitted with the bid;

2. Performance bond equal to 100 percent of the contract price, and;

3. Payment bond equal to 100 percent of the contract price. Bonds must be obtained from companies holding Certificates of Authority as acceptable sureties, issued by the U.S. Treasury.

SPECIAL NOTICE TO BIDDERS

By the submission of this bid, each bidder acknowledges that he understands and agrees to be bound by the equal opportunity requirements of EPA regulations (40 CFR Part 8, particularly Section 8.4 (b)), which shall be applicable throughout the performance of work under any contract awarded pursuant to this solicitation. Each bidder agrees that if awarded a contract, it will similarly bind contractually each subcontractor. In implementation of the foregoing policies, each bidder further understands and agrees that if awarded a contract, it must engage in affirmative action directed at promoting and ensuring equal employment opportunity in the workforce used under the contract (and that it must require contractually the same effort of all subcontractors whose subcontracts exceed $10,000.00). The bidder understands and agrees that “affirmative action” as used herein shall constitute a good faith effort to achieve and maintain minority employment in each trade in the on-site workforce used on the project.

EQUAL EMPLOYMENT OPPORTUNITY NOTICE

NOTICE OF REQUIREMENT FOR AFFIRMATIVE ACTION TO ENSURE EQUAL OPPORTUNITY (EXECUTIVE ORDER 11246)

1. The Offeror's or Bidder's attention is called to the Equal Opportunity Clause which is included in the nondiscrimination Provision and Labor Standards, EPA Form 5720-4 and the Standard Federal Equal Employment Opportunity (EEO) Construction Contract Specifications set forth herein.

2. The goals for minority and female participation, expressed in percentage terms for the Contractor's aggregate workforce in each trade on all construction work in the covered area, are as follows:

Goals for minority participation for each trade	**4.0 percent**
Goals for female participation for each trade	**4.0 percent**

   These goals are applicable to all the Contractor's construction work (whether or not it is federal or federally assisted) performed in the covered area.

   The Contractor's compliance with the Executive Order and the regulations in 41 CFR Part 60-4 shall be based on its implementation of the Equal Opportunity Clause, specific affirmative action obligations required by the specifications set forth in 41 CFR 60-4.3(a), and its efforts to meet the goals established for the geographical area where the contract resulting from this solicitation is to be performed. The hours of minority and female employment and training must be substantially uniform throughout the length of the contract, and in each trade, and the contractor shall make a good faith effort to employ minority and women evenly on each of its projects. The transfer of minority or female employees or trainees from Contractor to Contractor or from project to project for the sole purpose of meeting the Contractor's goals shall be a violation to the contract, the Executive Order, and the regulations in 41 CFR Part 60-4. Compliance with the goals will be measured against the total work hours performed.

3. The contractor shall not discriminate on the basis of race, color, national origin, or sex in the performance of this contract. The contractor shall carry out applicable requirements of 40CFR Part 33 in the award and administration of contracts awarded under EPA financial assistance agreements. Failure by the contractor to carry out these requirements is a material breach of this contract, which may result in the termination of this contract.

4. As used in this Notice, and in the contract resulting from this solicitation, the "covered area" is (insert description of the geographical area where the contract is to be performed giving the state, county, and city, if any).

EEO Construction Contract Specifications

Executive Order 11246
https://www.dol.gov/agencies/ofccp/executive-order-11246/as-amended

Davis-Bacon and Related Acts
https://www.dol.gov/agencies/whd/government-contracts/construction

INSERT WAGE RATE DETERMINATION HERE

Wage Rates (for *Heavy Construction*) are state/county specific can be found at:
http://www.dol.gov/whd/govcontracts/dbra.htm

Sample Payroll Form (WH-347) is found at:
http://www.dol.gov/whd/forms/wh347.pdf

Labor Standards Interview Form (SF-1445) is found at:
http://www.gsa.gov/portal/forms/download/115910

Davis-Bacon (WH-1321) poster is found at:
http://www.dol.gov/whd/regs/compliance/posters/fedprojc.pdf (*English*)

http://www.dol.gov/whd/regs/compliance/posters/davispan.pdf (*Spanish*)

Fair Labor Standards Act Minimum Wage poster is found at:
http://www.dol.gov/whd/regs/compliance/posters/minwagebwp.pdf (*English*)

http://www.dol.gov/whd/regs/compliance/posters/minwagespbwP.pdf (*Spanish*)

"EEO Is the Law" poster is found at:
https://www.eeoc.gov/sites/default/files/2022-10/22-088_EEOC_KnowYourRights_10_20.pdf
(*English*)

https://www.eeoc.gov/sites/default/files/2022-10/22-088_EEOC_KnowYourRightsSp_10_20.pdf
(*Spanish*)

OSHA poster is found at:
https://www.osha.gov/sites/default/files/publications/osha3165.pdf
(*English*)

https://www.osha.gov/sites/default/files/publications/osha3167.pdf
(*Spanish*)

Davis-Bacon and Related Acts

Labor Standards Provisions for Federally Assisted Contracts

Contract Provision for Contracts in Excess of $2,000.

(1) Minimum wages.

(i) All laborers and mechanics employed or working upon the site of the work will be paid unconditionally and not less often than once a week, and without subsequent deduction or rebate on any account (except such payroll deductions as are permitted by regulations issued by the Secretary of Labor under the Copeland Act (29 CFR part 3)), the full amount of wages and bona fide fringe benefits (or cash equivalents thereof) due at time of payment computed at rates not less than those contained in the wage determination of the Secretary of Labor which is attached hereto and made a part hereof, regardless of any contractual relationship which may be alleged to exist between the contractor and such laborers and mechanics.

Contributions made or costs reasonably anticipated for bona fide fringe benefits under section 1(b)(2) of the Davis-Bacon Act on behalf of laborers or mechanics are considered wages paid to such laborers or mechanics, subject to the provisions of paragraph (a)(1)(iv) of this section; also, regular contributions made or costs incurred for more than a weekly period (but not less often than quarterly) under plans, funds, or programs which cover the particular weekly period, are deemed to be constructively made or incurred during such weekly period. Such laborers and mechanics shall be paid the appropriate wage rate and fringe benefits on the wage determination for the classification of work actually performed, without regard to skill, except as provided in § 5.5(a)(4). Laborers or mechanics performing work in more than one classification may be compensated at the rate specified for each classification for the time actually worked therein: Provided that the employer's payroll records accurately set forth the time spent in each classification in which work is performed. The wage determination (including any additional classification and wage rates conformed under paragraph (a)(1)(ii) of this section) and the Davis-Bacon poster (WH-1321) shall be posted at all times by the contractor and its subcontractors at the site of the work in a prominent and accessible place where it can be easily seen by the workers.

Subrecipients may obtain wage determinations from the U.S. Department of Labor's web site, http://www.dol.gov/whd/govcontracts/dbra.htm (E-tools)

(ii)(A) The subrecipient(s), on behalf of EPA, shall require that any class of laborers or mechanics, including helpers, which is not listed in the wage determination and which is to be employed under the contract shall be classified in conformance with the wage determination. The State award official shall approve a request for an additional classification and wage rate and fringe benefits therefore only when the following criteria have been met:

(1) The work to be performed by the classification requested is not performed by a classification in the wage determination; and

(2) The classification is utilized in the area by the construction industry; and

(3) The proposed wage rate, including any bona fide fringe benefits, bears a reasonable relationship to the wage rates contained in the wage determination.

(B) If the contractor and the laborers and mechanics to be employed in the classification (if known), or their representatives, and the subrecipient(s) agree on the classification and wage rate (including the amount designated for fringe benefits where appropriate), documentation of the action taken and the request, including the local wage determination shall be sent by the subrecipient (s) to the State award official. The State award official will transmit the request, to the Administrator of the Wage and Hour Division, Employment Standards Administration, U.S. Department of Labor, Washington, DC 20210 and to the EPA DB Regional Coordinator concurrently. The Administrator, or an authorized representative, will approve, modify, or disapprove every additional classification request within 30 days of receipt and so advise the State award official or will notify the State award official within the 30-day period that additional timeis necessary.

(C) In the event the contractor, the laborers or mechanics to be employed in the classification or their representatives, and the subrecipient(s) do not agree on the proposed classification and wage rate (including the amount designated for fringe benefits, where appropriate), the award official shall refer the request and the local wage determination, including the views of all interested parties and the recommendation of the State award official, to the Administrator for determination. The request shall be sent to the EPA DB Regional Coordinator concurrently. The Administrator, or an authorized representative, will issue a determination within 30 days of receipt of the request and so advise the contracting officer or will notify the contracting officer within the 30-day period that additional time is necessary.

(D) The wage rate (including fringe benefits where appropriate) determined pursuant to paragraphs (a)(1)(ii)(B) or (C) of this section, shall be paid to all workers performing work in the classification under this contract from the first day on which work is performed in theclassification.

(iii) Whenever the minimum wage rate prescribed in the contract for a class of laborers or mechanics includes a fringe benefit which is not expressed as an hourly rate, the contractor shall either pay the benefit as stated in the wage determination or shall pay another bona fide fringe benefit or an hourly cash equivalent thereof.

(iv) If the contractor does not make payments to a trustee or other third person, the contractor may consider as part of the wages of any laborer or mechanic the amount of any costs reasonably anticipated in providing bona fide fringe benefits under a plan or program, Provided, That the Secretary of Labor has found, upon the written request of the contractor, that the applicable standards of the Davis-Bacon Act have been met. The Secretary of Labor may require the contractor to set aside in a separate account assets for the meeting of obligations under the plan or program.

(2) Withholding. The subrecipient(s), shall upon written request of the EPA Award Official or an authorized representative of the Department of Labor, withhold or cause to be withheld from the contractor under this contract or any other Federal contract with the same prime contractor, or any other federally-assisted contract subject to Davis-Bacon prevailing wage requirements, which is held by the same prime contractor, so much of the accrued payments or advances as may be considered necessary to pay laborers and mechanics, including apprentices, trainees, and helpers, employed by the contractor or any subcontractor the full amount of wages required by the contract. In the event of failure to pay any laborer or mechanic, including any apprentice, trainee, or helper, employed or working on the site of the work, all or part of the wages required by the contract, the (Agency) may, after written notice to the contractor, sponsor, applicant, or owner, take such action as may be necessary to cause the suspension of any further payment, advance, or guarantee of funds until such violations haveceased.

(3) Payrolls and basic records.

(i) Payrolls and basic records relating thereto shall be maintained by the contractor during the course of the work and preserved for a period of three years thereafter for all laborers and mechanics working at the site of the work. Such records shall contain the name, address, and social security number of each such worker, his or her correct classification, hourly rates of wages paid (including rates of contributions or costs anticipated for bona fide fringe benefits or cash equivalents thereof of the types described in section 1(b)(2)(B) of the Davis-Bacon Act), daily and weekly number of hours worked, deductions made and actual wages paid. Whenever the Secretary of Labor has found under 29 CFR 5.5(a)(1)(iv) that the wages of any laborer or mechanic include the amount of any costs reasonably anticipated in providing benefits under a plan or program described in section 1(b)(2)(B) of the Davis-Bacon Act, the contractor shall maintain records which show that the commitment to provide such benefits is enforceable, that the plan or program is financially responsible, and that the plan or program has been communicated in writing to the laborers or mechanics affected, and records which show the costs anticipated or the actual cost incurred in providing such benefits. Contractors employing apprentices or trainees under approved programs shall maintain written evidence of the registration of apprenticeship programs and certification of trainee programs, the registration of the apprentices and trainees, and the ratios and wage rates prescribed in the applicable programs.

(ii)(A) The contractor shall submit weekly, for each week in which any contract work is performed, a copy of all payrolls to the subrecipient, that is, the entity that receives the sub-grant or loan from the State capitalization grant recipient. Such documentation shall be available on request of the State recipient or EPA. As to each payroll copy received, the subrecipient shall provide written confirmation in a form satisfactory to the State indicating whether or not the project is in compliance with the requirements of 29 CFR 5.5(a)(1) based on the most recent payroll copies for the specified week. The payrolls shall set out accurately and completely all of the information required to be maintained under 29 CFR 5.5(a)(3)(i), except that full social security numbers and home addresses shall not be included on the weekly

payrolls. Instead the payrolls shall only need to include an individually identifying number for each employee (e.g., the last four digits of the employee's social security number). The required weekly payroll information may be submitted in any form desired. Optional Form WH-347 is available for this purpose from the Wage and Hour Division Web site at http://www.dol.gov/whd/forms or its successor site. The prime contractor is responsible for the submission of copies of payrolls by all subcontractors. Contractors and subcontractors shall maintain the full social security number and current address of each covered worker, and shall provide them upon request to the subrecipient(s) for transmission to the State or EPA if requested by EPA, the State, the contractor, or the Wage and Hour Division of the Department of Labor for purposes of an investigation or audit of compliance with prevailing wage requirements. It is not a violation of this section for a prime contractor to require a subcontractor to provide addresses and social security numbers to the prime contractor for its own records, without weekly submission to the subrecipient(s).

(B) Each payroll submitted shall be accompanied by a "Statement of Compliance," signed by the contractor or subcontractor or his or her agent who pays or supervises the payment of the persons employed under the contract and shall certify the following:

(1) That the payroll for the payroll period contains the information required to be provided under § 5.5 (a)(3)(ii) of Regulations, 29 CFR part 5, the appropriate information is being maintained under § 5.5 (a)(3)(i) of Regulations, 29 CFR part 5, and that such information is correct and complete;

(2) That each laborer or mechanic (including each helper, apprentice, and trainee) employed on the contract during the payroll period has been paid the full weekly wages earned, without rebate, either directly or indirectly, and that no deductions have been made either directly or indirectly from the full wages earned, other than permissible deductions as set forth in Regulations, 29 CFR part 3;

(3) That each laborer or mechanic has been paid not less than the applicable wage rates and fringe benefits or cash equivalents for the classification of work performed, as specified in the applicable wage determination incorporated into the contract.

(C) The weekly submission of a properly executed certification set forth on the reverse side of Optional Form WH-347 shall satisfy the requirement for submission of the "Statement of Compliance" required by paragraph (a)(3)(ii)(B) of this section.

(D) The falsification of any of the above certifications may subject the contractor or subcontractor to civil or criminal prosecution under section 1001 of title 18 and section 231 of title 31 of the United States Code.

(iii) The contractor or subcontractor shall make the records required under paragraph (a)(3)(i) of this section available for inspection, copying, or transcription by authorized representatives of the State, EPA or the Department of Labor, and shall permit such representatives to interview employees during working hours on the job. If the contractor or subcontractor fails to submit the required records or to make them available, the Federal agency or State may, after written notice to the contractor, sponsor, applicant, or owner, take such action as may be necessary to cause the suspension of any further payment, advance, or guarantee of funds. Furthermore, failure to submit the required records upon request or to make such records available may be grounds for debarment action pursuant to 29 CFR 5.12.

(4) Apprentices and trainees--

(i) Apprentices. Apprentices will be permitted to work at less than the predetermined rate for the work they performed when they are employed pursuant to and individually registered in a bona fide apprenticeship program registered with the U.S. Department of Labor, Employment and Training Administration, Office of Apprenticeship Training, Employer and Labor Services, or with a State Apprenticeship Agency recognized by the Office, or if a person is employed in his or her first 90 days of probationary employment as an apprentice in such an apprenticeship program, who is not individually registered in the program, but who has been certified by the Office of Apprenticeship Training, Employer and Labor Services or a State Apprenticeship Agency (where appropriate) to be eligible for probationary employment as an apprentice. The allowable ratio of apprentices to journeymen on the job site in any craft classification shall not be greater than the ratio permitted to the contractor as to the entire work force under the registered program. Any worker listed on a payroll at an apprentice wage rate, who is not registered or otherwise employed as stated above, shall be paid not less than the applicable wage rate on the wage determination for the classification of work actually performed.

In addition, any apprentice performing work on the job site in excess of the ratio permitted under the registered program shall be paid not less than the applicable wage rate on the wage determination for the work actually performed. Where a contractor is performing construction on a project in a locality other than that in which its program is registered, the ratios and wage rates (expressed in percentages of the journeyman's hourly rate) specified in the contractor's or subcontractor's registered program shall be observed. Every apprentice must be paid at not less than the rate specified in the registered program for the apprentice's level of progress, expressed as a percentage of the journeymen hourly rate specified in the applicable wage determination. Apprentices shall be paid fringe benefits in accordance with the provisions of the apprenticeship program. If the apprenticeship program does not specify fringe benefits, apprentices must be paid the full amount of fringe benefits listed on the wage determination for the applicable classification. If the Administrator determines that a different practice prevails for the applicable apprentice classification, fringes shall be paid in accordance with that determination. In the event the Office of Apprenticeship Training, Employer and Labor Services, or a State Apprenticeship Agency recognized by the Office, withdraws approval of an apprenticeship program, the contractor will no longer be permitted to utilize apprentices at less than the applicable predetermined rate for the work performed until an acceptable program is approved.

(ii) Trainees. Except as provided in 29 CFR 5.16, trainees will not be permitted to work at less than the predetermined rate for the work performed unless they are employed pursuant to and individually registered in a program which has received prior approval, evidenced by formal certification by the U.S. Department of Labor, Employment and Training Administration. The ratio of trainees to journeymen on the job site shall not be greater than permitted under the plan approved by the Employment and Training Administration. Every trainee must be paid at not less than the rate specified in the approved program for the trainee's level of progress, expressed as a percentage of the journeyman hourly rate specified in the applicable wage determination. Trainees shall be paid fringe benefits in accordance with the provisions of the trainee program. If the trainee program does not mention fringe benefits, trainees shall be paid the full amount of fringe benefits listed on the wage determination unless the Administrator of the Wage and Hour Division determines that there is an apprenticeship program associated with the corresponding journeyman wage rate on the wage determination which provides for less than full fringe benefits for apprentices. Any employee listed on the payroll at a trainee rate who is not registered and participating in a training plan approved by the Employment and Training Administration shall be paid not less than the applicable wage rate on the wage determination for the classification of work actually performed. In addition, any trainee performing work on the job site in excess of the ratio permitted under the registered program shall be paid not less than the applicable wage rate on the wage determination for the work actually performed. In the event the Employment and Training Administration withdraws approval of a training program, the contractor will no longer be permitted to utilize trainees at less than the applicable predetermined rate for the work performed until an acceptable program is approved.

(iii) Equal employment opportunity. The utilization of apprentices, trainees and journeymen under this part shall be in conformity with the equal employment opportunity requirements of Executive Order 11246, as amended, and 29 CFR part 30.

(5) Compliance with Copeland Act requirements. The contractor shall comply with the requirements of 29 CFR part 3, which are incorporated by reference in this contract.

(6) Subcontracts. The contractor or subcontractor shall insert in any subcontracts the clauses contained in 29 CFR 5.5(a)(1) through (10) and such other clauses as the EPA determines may by appropriate, and also a clause requiring the subcontractors to include these clauses in any lower tier subcontracts. The prime contractor shall be responsible for the compliance by any subcontractor or lower tier subcontractor with all the contract clauses in 29 CFR 5.5.

(7) Contract termination; debarment. A breach of the contract clauses in 29 CFR 5.5 may be grounds for termination of the contract, and for debarment as a contractor and a subcontractor as provided in 29 CFR 5.12.

(8) Compliance with Davis-Bacon and Related Act requirements. All rulings and interpretations of the Davis-Bacon and Related Acts contained in 29 CFR parts 1, 3, and 5 are herein incorporated by reference in this contract.

(9) Disputes concerning labor standards. Disputes arising out of the labor standards provisions of this contract shall not be subject to the general disputes clause of this contract. Such disputes shall be resolved in accordance with the procedures of the Department of Labor set forth in 29 CFR parts 5, 6, and 7. Disputes within the

meaning of this clause include disputes between the contractor (or any of its subcontractors) and Subrecipient(s), State, EPA, the U.S. Department of Labor, or the employees or their representatives.

(10) Certification of eligibility.

(i) By entering into this contract, the contractor certifies that neither it (nor he or she) nor any person or firm who has an interest in the contractor's firm is a person or firm ineligible to be awarded Government contracts by virtue of section 3(a) of the Davis-Bacon Act or 29 CFR 5.12(a)(1).

(ii) No part of this contract shall be subcontracted to any person or firm ineligible for award of a Government contract by virtue of section 3(a) of the Davis-Bacon Act or 29 CFR 5.12(a)(1).

(iii) The penalty for making false statements is prescribed in the U.S. Criminal Code, 18 U.S.C. 1001.

Contract Provision for Contracts in Excess of $100,000.

(a) Contract Work Hours and Safety Standards Act. The subrecipient shall insert the following clauses set forth in paragraphs (a)(1), (2), (3), and (4) of this section in full in any contract in an amount in excess of $100,000 and subject to the overtime provisions of the Contract Work Hours and Safety Standards Act. These clauses shall be inserted in addition to the clauses required by Item 3, above or 29 CFR 4.6. As used in this paragraph, the terms laborers and mechanics include watchmen and guards.

(1) Overtime requirements. No contractor or subcontractor contracting for any part of the contract work which may require or involve the employment of laborers or mechanics shall require or permit any such laborer or mechanic in any workweek in which he or she is employed on such work to work in excess of forty hours in such workweek unless such laborer or mechanic receives compensation at a rate not less than one and one-half times the basic rate of pay for all hours worked in excess of forty hours in such workweek.

(2) Violation; liability for unpaid wages; liquidated damages. In the event of any violation of the clause set forth in paragraph (a)(1) of this section the contractor and any subcontractor responsible therefore shall be liable for the unpaid wages. In addition, such contractor and subcontractor shall be liable to the United States (in the case of work done under contract for the District of Columbia or a territory, to such District or to such territory), for liquidated damages. Such liquidated damages shall be computed with respect to each individual laborer or mechanic, including watchmen and guards, employed in violation of the clause set forth in paragraph (a)(1) of this section, in the sum of $10 for each calendar day on which such individual was required or permitted to work in excess of the standard workweek of forty hours without payment of the overtime wages required by the clause set forth in paragraph (a)(1) of this section.

(3) Withholding for unpaid wages and liquidated damages. The subrecipient, upon written request of the EPA Award Official or an authorized representative of the Department of Labor, shall withhold or cause to be withheld, from any moneys payable on account of work performed by the contractor or subcontractor under any such contract or any other Federal contract with the same prime contractor, or any other federally-assisted contract subject to the Contract Work Hours and Safety Standards Act, which is held by the same prime contractor, such sums as may be determined to be necessary to satisfy any liabilities of such contractor or subcontractor for unpaid wages and liquidated damages as provided in the clause set forth in paragraph (b)(2) of this section.

(4) Subcontracts. The contractor or subcontractor shall insert in any subcontracts the clauses set forth in paragraph (a)(1) through (4) of this section and also a clause requiring the subcontractors to include these clauses in any lower tier subcontracts. The prime contractor shall be responsible for compliance by any subcontractor or lower tier subcontractor with the clauses set forth in paragraphs (a)(1) through (4) of this section.

(b) In addition to the clauses contained in Item 3, above, in any contract subject only to the Contract Work Hours and Safety Standards Act and not to any of the other statutes cited in 29 CFR 5.1, the Subrecipient shall insert a clause requiring that the contractor or subcontractor shall maintain payrolls and basic payroll records during the course of the work and shall preserve them for a period of three years from the completion of the contract for all laborers and mechanics, including guards and watchmen, working on the contract. Such records shall contain the name and address of each such employee, social security number, correct classifications, hourly rates of wages paid, daily and weekly number of hours worked, deductions made, and actual wages paid. Further, the Subrecipient shall insert in any such contract a clause providing that the records to be maintained under this paragraph shall be made available by the contractor or subcontractor for inspection, copying, or transcription by authorized representatives of the (write the name of agency) and the Department of Labor, and the contractor or subcontractor will permit such representatives to interview employees during working hours on the job

(5) Compliance Verification:

(a) The subrecipient shall periodically interview a sufficient number of employees entitled to DB prevailing wages (covered employees) to verify that contractors or subcontractors are paying the appropriate wage rates. As provided in 29 CFR 5.6(a)(6), all interviews must be conducted in confidence. The subrecipient must use Standard Form 1445 (SF 1445) or equivalent documentation to memorialize the interviews. Copies of the SF 1445 are available from EPA on request.

(b) The subrecipient shall establish and follow an interview schedule based on its assessment of the risks of noncompliance with DB posed by contractors or subcontractors and the duration of the contract or subcontract. At a minimum, the subrecipient should conduct interviews with a representative group of covered employees within two weeks of each contractor or subcontractor's submission of its initial weekly payroll data and two weeks prior to the estimated completion date for the contract or subcontract. Subrecipients must conduct more frequent interviews if the initial interviews or other information indicates that there is a risk that the contractor or subcontractor is not complying with DB. Subrecipients shall immediately conduct necessary interviews in response to an alleged violation of the prevailing wage requirements. All interviews shall be conducted in confidence.

(c) The subrecipient shall periodically conduct spot checks of a representative sample of weekly payroll data to verify that contractors or subcontractors are paying the appropriate wage rates. The subrecipient shall establish and follow a spot check schedule based on its assessment of the risks of noncompliance with DB posed by contractors or subcontractors and the duration of the contract or subcontract. At a minimum, if practicable, the subrecipient should spot check payroll data within two weeks of each contractor or subcontractor's submission of its initial payroll data and two weeks prior to the completion date the contract or subcontract. Subrecipients must conduct more frequent spot checks if the initial spot check or other information indicates that there is a risk that the contractor or subcontractor is not complying with DB. In addition, during the examinations the subrecipient shall verify evidence of fringe benefit plans and payments thereunder by contractors and subcontractors who claim credit for fringe benefit contributions.

(d) The subrecipient shall periodically review contractors and subcontractors' use of apprentices and trainees to verify registration and certification with respect to apprenticeship and training programs approved by either the U.S Department of Labor or a state, as appropriate, and that contractors and subcontractors are not using disproportionate numbers of, laborers, trainees and apprentices. These reviews shall be conducted in accordance with the schedules for spot checks and interviews described in Item 5(b) and (c) above.

(e) Subrecipients must provide a report of compliance to the Georgia Environmental Finance Authority detailing compliance efforts and results. This report will be submitted with or prior to the loan recipient's first request for funding of construction costs, prior to final disbursement of funds from the loan, and as requested during the project.

(f) Subrecipients must immediately report potential violations of the DB prevailing wage requirements to the EPA DB coordinator and to the appropriate DOL Wage and Hour District Office listed at http://www.dol.gov/whd/america2.htm.

CERTIFIED PAYROLL REVIEW CHECKLIST

(This is a *recommended Certified Payroll Review Checklist for the Owner's use*.)

CONTRACT ID City of CW/DWSRF#00 - 000	**PRIME CONTRACTOR/SUBCONTRACTOR** X Construction
GENERAL WAGE DECISION AND DATE (Insert number and date)	**PAYROLL PERIOD ENDING**

INSTRUCTIONS: This checklist is to be used in conjunction with projects requiring Davis-Bacon Wage Rates and compliance reviews. All certified payrolls are to be date stamped upon receipt from the prime contractor.

Payroll Information Checklist:

_____ Prime Contractor's or subcontractor's name and address
_____ Contract ID numbers (GEFA SRF No.)
_____ Week ending.
_____ Project location.

_____ Employee ID or Last four digits of Social Security
- _____ Number Social Security Number removed
- _____ Employee's work classification
- _____ Identification of OJTs, apprentices, and program levels (%) on payrolls.
- _____ Verify that OJT and Apprentice Program documentation is in project files.

_____ Daily and weekly employee hours worked in each job classification.
- _____ Daily and weekly employee overtime (or premium) hours worked
- _____ Total weekly hours worked on all jobs (prevailing and non-prevailing wage).
- _____ Base rate shown for each employee, overtime (or premium) rate shown when worked.
- _____ Verify correct wage rates are being paid.
- _____ Verify overtime is being paid correctly (over 40 hrs/wk, and Time and a half)
- _____ Week's gross wages
- _____ Week's itemized deductions.
- _____ Week's net wages paid

_____ Compliance statement attached.
- _____ Method of fringe benefit payment described by checking either box (4)(a) or (4)(b).
- _____ Fringe benefit package information in file and updated as needed (if 4(a) is checked)
- _____ Exceptions explanation for fringe benefit (4)(c).
- _____ Signature.

Compliance Review Checklist (for field reviews):

_____ Verify work classifications reported are consistent with the work performed.
_____ Compare payrolls with wage rate interviews when conducted.
_____ Compare number of employees and hours worked with project documentation.

REVIEWED BY:	**DATE**

GEFA-16

"General Decision Number: GA20250289 04/11/2025

Superseded General Decision Number: GA20240289

State: Georgia

Construction Type: Heavy

County: Hall County in Georgia.

HEAVY CONSTRUCTION PROJECTS
Note: Contracts subject to the Davis-Bacon Act are generally required to pay at least the applicable minimum wage rate required under Executive Order 14026 or Executive Order 13658. Please note that these Executive Orders apply to covered contracts entered into by the federal government that are subject to the Davis-Bacon Act itself, but do not apply to contracts subject only to the Davis-Bacon Related Acts, including those set forth at 29 CFR 5.1(a)(1).

If the contract is entered into on or after January 30, 2022, or the contract is renewed or extended (e.g., an option is exercised) on or after January 30, 2022:	. Executive Order 14026 generally applies to the contract. . The contractor must pay all covered workers at least $17.75 per hour (or the applicable wage rate listed on this wage determination, if it is higher) for all hours spent performing on the contract in 2025.
If the contract was awarded on or between January 1, 2015 and January 29, 2022, and the contract is not renewed or extended on or after January 30, 2022:	. Executive Order 13658 generally applies to the contract. . The contractor must pay all covered workers at least $13.30 per hour (or the applicable wage rate listed on this wage determination, if it is higher) for all hours spent performing on that contract in 2025.

The applicable Executive Order minimum wage rate will be adjusted annually. If this contract is covered by one of the Executive Orders and a classification considered necessary for performance of work on the contract does not appear on this wage determination, the contractor must still submit a conformance request.

Additional information on contractor requirements and worker protections under the Executive Orders is available at http://www.dol.gov/whd/govcontracts.

Modification Number	Publication Date
0	01/03/2025
1	04/11/2025

* ELEC0613-003 03/03/2025

	Rates	Fringes
ELECTRICIAN	$ 38.65	33%

---

* SUGA2017-004 04/15/2021

	Rates	Fringes
CARPENTER	$ 21.64	3.90
CEMENT MASON/CONCRETE FINISHER	$ 19.02	3.29
LABORER: Common or General	$ 13.98 **	1.38
LABORER: Pipelayer	$ 17.11 **	3.23
OPERATOR: Backhoe/Excavator/Trackhoe	$ 24.17	4.70
OPERATOR: Bulldozer	$ 16.29 **	0.00
OPERATOR: Crane	$ 25.45	0.00
OPERATOR: Loader	$ 17.86	0.65
OPERATOR: Roller	$ 11.89 **	0.00

WELDERS - Receive rate prescribed for craft performing operation to which welding is incidental.

==========

** Workers in this classification may be entitled to a higher minimum wage under Executive Order 14026 ($17.75) or 13658 ($13.30). Please see the Note at the top of the wage determination for more information. Please also note that the minimum wage requirements of Executive Order 14026 are not currently being enforced as to any contract or subcontract to which the states of Texas, Louisiana, or Mississippi, including their agencies, are a party.

Note: Executive Order (EO) 13706, Establishing Paid Sick Leave for Federal Contractors applies to all contracts subject to the Davis-Bacon Act for which the contract is awarded (and any solicitation was issued) on or after January 1, 2017. If this contract is covered by the EO, the contractor must provide employees with 1 hour of paid sick leave for every 30 hours they work, up to 56 hours of paid sick leave each year. Employees must be permitted to use paid sick leave for their own illness, injury or other health-related needs, including preventive care; to assist a family member (or person who is like family to the employee) who is ill, injured, or has other health-related needs, including preventive care; or for reasons resulting from, or to assist a family member (or person who is like family to the employee) who is a victim of, domestic violence, sexual assault, or stalking. Additional information on contractor requirements and worker protections under the EO is available at https://www.dol.gov/agencies/whd/government-contracts.

Unlisted classifications needed for work not included within the scope of the classifications listed may be added after award only as provided in the labor standards contract clauses

(29CFR 5.5 (a) (1) (iii)).

The body of each wage determination lists the classifications and wage rates that have been found to be prevailing for the type(s) of construction and geographic area covered by the wage determination. The classifications are listed in alphabetical order under rate identifiers indicating whether the particular rate is a union rate (current union negotiated rate), a survey rate, a weighted union average rate, a state adopted rate, or a supplemental classification rate.

Union Rate Identifiers

A four-letter identifier beginning with characters other than ""SU"", ""UAVG"", ?SA?, or ?SC? denotes that a union rate was prevailing for that classification in the survey. Example: PLUM0198-005 07/01/2024. PLUM is an identifier of the union whose collectively bargained rate prevailed in the survey for this classification, which in this example would be Plumbers. 0198 indicates the local union number or district council number where applicable, i.e., Plumbers Local 0198. The next number, 005 in the example, is an internal number used in processing the wage determination. The date, 07/01/2024 in the example, is the effective date of the most current negotiated rate.

Union prevailing wage rates are updated to reflect all changes over time that are reported to WHD in the rates in the collective bargaining agreement (CBA) governing the classification.

Union Average Rate Identifiers

The UAVG identifier indicates that no single rate prevailed for those classifications, but that 100% of the data reported for the classifications reflected union rates. EXAMPLE: UAVG-OH-0010 01/01/2024. UAVG indicates that the rate is a weighted union average rate. OH indicates the State of Ohio. The next number, 0010 in the example, is an internal number used in producing the wage determination. The date, 01/01/2024 in the example, indicates the date the wage determination was updated to reflect the most current union average rate.

A UAVG rate will be updated once a year, usually in January, to reflect a weighted average of the current rates in the collective bargaining agreements on which the rate is based.

Survey Rate Identifiers

The ""SU"" identifier indicates that either a single non-union rate prevailed (as defined in 29 CFR 1.2) for this classification in the survey or that the rate was derived by computing a weighted average rate based on all the rates reported in the survey for that classification. As a weighted average rate includes all rates reported in the survey, it may include both union and non-union rates. Example: SUFL2022-007 6/27/2024. SU indicates the rate is a single non-union prevailing rate or a weighted average of survey data for that classification. FL indicates the State of Florida. 2022 is the year of the survey on which these classifications and rates are based. The next number, 007 in the example, is an internal number used in producing the wage determination. The date,

6/27/2024 in the example, indicates the survey completion date for the classifications and rates under that identifier.

?SU? wage rates typically remain in effect until a new survey is conducted. However, the Wage and Hour Division (WHD) has the discretion to update such rates under 29 CFR 1.6(c)(1).

State Adopted Rate Identifiers

The ""SA"" identifier indicates that the classifications and prevailing wage rates set by a state (or local) government were adopted under 29 C.F.R 1.3(g)-(h). Example: SAME2023-007 01/03/2024. SA reflects that the rates are state adopted. ME refers to the State of Maine. 2023 is the year during which the state completed the survey on which the listed classifications and rates are based. The next number, 007 in the example, is an internal number used in producing the wage determination. The date, 01/03/2024 in the example, reflects the date on which the classifications and rates under the ?SA? identifier took effect under state law in the state from which the rates were adopted.

WAGE DETERMINATION APPEALS PROCESS

1) Has there been an initial decision in the matter? This can be:

a) a survey underlying a wage determination
b) an existing published wage determination
c) an initial WHD letter setting forth a position on a wage determination matter
d) an initial conformance (additional classification and rate) determination

On survey related matters, initial contact, including requests for summaries of surveys, should be directed to the WHD Branch of Wage Surveys. Requests can be submitted via email to davisbaconinfo@dol.gov or by mail to:

Branch of Wage Surveys
Wage and Hour Division
U.S. Department of Labor
200 Constitution Avenue, N.W.
Washington, DC 20210

Regarding any other wage determination matter such as conformance decisions, requests for initial decisions should be directed to the WHD Branch of Construction Wage Determinations. Requests can be submitted via email to BCWD-Office@dol.gov or by mail to:

Branch of Construction Wage Determinations
Wage and Hour Division
U.S. Department of Labor
200 Constitution Avenue, N.W.
Washington, DC 20210

2) If an initial decision has been issued, then any interested party (those affected by the action) that disagrees with the decision can request review and reconsideration from the Wage and Hour Administrator (See 29 CFR Part 1.8 and 29 CFR Part 7). Requests for review and reconsideration can be submitted via email to dba.reconsideration@dol.gov or by mail to:

Wage and Hour Administrator
U.S. Department of Labor
200 Constitution Avenue, N.W.
Washington, DC 20210

The request should be accompanied by a full statement of the interested party's position and any information (wage payment data, project description, area practice material, etc.) that the requestor considers relevant to the issue.

3) If the decision of the Administrator is not favorable, an interested party may appeal directly to the Administrative Review Board (formerly the Wage Appeals Board). Write to:

Administrative Review Board
U.S. Department of Labor
200 Constitution Avenue, N.W.
Washington, DC 20210.

==========

END OF GENERAL DECISION"

GEORGIA ENVIRONMENTAL FINANCE AUTHORITY

AMERICAN IRON AND STEEL
SPECIAL CONDITIONS AND INFORMATION

For

FEDERALLY ASSISTED
STATE REVOLVING LOAN FUND
CONSTRUCTION CONTRACTS

April 11, 2014

The following standard language must be incorporated into construction contract documents and in all solicitations for offers and bids for all construction contracts or subcontracts to be funded, in whole or in part, through the Federally-assisted State Revolving Fund in the State of Georgia for projects subject to the American Iron and Steel requirements.

These Special Conditions shall not relieve the participants in this project of responsibility to meet any requirements of other portions of this construction contract or of other agencies, whether these other requirements are more or less stringent. The requirements in these Special Conditions must be satisfied in order for work to be funded with the State Revolving Fund.

TABLE OF CONTENTS

General Requirements	**GEFA/AIS-3**
Appendix 1 – Definitions	**GEFA/AIS-5**
Appendix 2 – Sample Certifications for Manufacturer Certification	**GEFA/AIS-8**
Appendix 3 – P.L. 113-76, Consolidated Appropriations Act, 2014	**GEFA/AIS-11**

GENERAL REQUIREMENTS

These Special Conditions are based on guidance provided by the United States Environmental Protection Agency (EPA). Public Law 113-76, the Consolidated Appropriations Act, 2014 (Act), includes an "American Iron and Steel" (AIS) requirement that requires State Revolving Loan Fund (SRF) assistance recipients to use iron and steel products that are produced in the United States for projects in this project. A copy of Section 436 of the Act is found in Appendix 3.

The products and materials subject to these requirements will be defined in Appendix 1 of these special conditions.

The Owner must maintain documentation of compliance with the AIS requirements. The documentation that the Owner maintains will be subject to review and audit by representatives of the state of Georgia, the EPA, the EPA Office of the Inspector General, and other federal authorities.

The Prime Contractor must provide certifications of compliance for all products subject to AIS requirements to the Owner prior to requesting payments for those products. The Owner or the Engineer may require certifications of compliance with submittals and shop drawings for these products as part of the submittal review process.

All manufacturing processes for a covered iron or steel product, as further defined in Appendix 1, must take place in the United States. If a covered product is taken out of the US for any part of the manufacturing process, it becomes foreign source material.

The EPA recommends the use of a step certification process to document the locations of the manufacturing processes involved with the production of steel and iron materials. A step certification is a process under which each handler (supplier, fabricator, manufacturer, processor, etc.) of the iron and steel products certifies that its step in the process was domestically performed. Each time a step in the manufacturing process takes place, the manufacturer delivers its work along with a certification of its origin. A certification should include the name of the manufacturer, the location of the manufacturing facility where the product or process took place (not its headquarters), a description of the product or item being delivered, and a signature by a manufacturer's responsible party. Attached in Appendix 2 is a sample step certification.

Alternatively, the final manufacturer that delivers the iron or steel product to the worksite, vendor, or contractor, may provide a certification asserting that all manufacturing processes for the product and for its iron and steel components occurred in the United States. The EPA states that additional documentation may be needed if the certification lacks important information and recommends step certification as the best practice. A sample final manufacturer certification is attached in Appendix 2.

The Prime Contractor may document that incidental and generally low cost components, as defined in Appendix 1, are compliant with AIS requirements under the De Minimis Waiver issued by the EPA. For these items, the Contractor must provide the Owner with documentation of costs for these items, including invoices, and a report of types and categories of materials to which the waiver is applied, the total cost of incidental components covered by the waiver for each category, and the calculations by which the total cost of materials incorporated into the project was determined. A sample De Minimis report is attached is Appendix 2.

Contractor, supplier, and manufacturer records are subject to review and audit by the EPA, its Inspector General, and other federal authorities.

Failure to comply with these requirements may delay, limit, or prevent the disbursement of SRF funds to the Owner. Violations of AIS requirements will require correction by the Contractor as determined by the Owner and Engineer, including replacement of deficient products with compliant products and compensation for costs and other damages that may result. Violations may also subject the Owner, the Contractor, and suppliers to other enforcement actions within the discretion of the EPA and other federal authorities.

The Act permits EPA to issue waivers for a case or category of cases in which EPA finds (1) that applying these requirements would be inconsistent with the public interest; (2) iron and steel products are not produced in the US in sufficient and reasonably available quantities and of a satisfactory quality; or (3) inclusion of iron and steel products produced in the US will increase the cost of the overall project by more than 25 percent. The Contractor should notify the Owner and Engineer immediately if it finds that a waiver may be required.

By submitting a bid for this project and by executing this construction contract, the Contractor acknowledges to and for the benefit of the Owner and the state of Georgia that it understands that the goods and services under this Agreement are being funded with monies made available by the Clean Water State Revolving Fund or the Drinking Water State Revolving Fund and that Federal law authorizing these Funds contains provisions commonly known as "American Iron and Steel" that requires all of the iron and steel products used in the project to be produced in the United States ("American Iron and Steel Requirement") including iron and steel products provided by the Contactor pursuant to this Agreement. The Contractor hereby represents and warrants to and for the benefit of the Owner and the state of Georgia that (a) the Contractor has reviewed and understands the American Iron and Steel Requirement, (b) all of the iron and steel products used in the project will be and/or have been produced in the United States in a manner that complies with the American Iron and Steel Requirement, unless a waiver of the requirement is approved, and (c) the Contractor will provide any further verified information, certification or assurance of compliance with this paragraph, or information necessary to support a waiver of the American Iron and Steel Requirement, as may be requested by the Owner or the state of Georgia. Notwithstanding any other provision of this Agreement, any failure to comply with this paragraph by the Contractor shall permit the Owner or the state of Georgia to recover as damages against the Contractor any loss, expense, or cost (including without limitation attorney's fees) incurred by the Owner or the state of Georgia resulting from any such failure (including without limitation any impairment or loss of funding, whether in whole or in part, from the state of Georgia or any damages owed to the state of Georgia by the Owner). The Owner and the Contractor agree that the state of Georgia, as a lender to the Owner for the funding of its project, is a third-party beneficiary and neither this paragraph (nor any other provision of this Agreement necessary to give this paragraph force or effect) shall be amended or waived without the prior written consent of the state of Georgia.

Appendix 1 – Definitions

For purposes of the Clean Water State Revolving Fund (CWSRF) and Drinking Water State Revolving Fund (DWSRF) projects that must comply with the AIS requirement, an iron or steel product is one of the following made primarily of iron or steel that is permanently incorporated into the project:

Lined or unlined pipes or fittings;
Manhole Covers;
Municipal Castings (defined in more detail below);
Hydrants;
Tanks;
Flanges;
Pipe clamps and restraints;
Valves;
Structural steel (defined in more detail below);
Reinforced precast concrete (defined in more detail below); and
Construction materials (defined in more detail below).

Product primarily of Iron or steel: The product must be made of greater than 50% iron or steel, measured by cost. If one of the listed products is not made primarily of iron or steel, United States (US) provenance is not required, except as required for reinforced precast concrete. If a product is composed of more than 50% iron or steel, but is not listed in Section 436 (a) (2) of the Act, it is not required to be produced in the US. Alternatively, the iron or steel in such a product can be sourced from outside the US.

Steel: An alloy that includes at least 50 percent iron and between 0.02 and 2 percent carbon and may include other elements. Other alloys of iron are not required to be produced in the US.

Produced in the United States: Production in the US of the iron or steel products used in the project requires that all manufacturing processes, including application of coatings, must take place in the United States, with the exception of metallurgical processes involving refinement of steel additives. All manufacturing processes includes processes such as melting, refining, forming, rolling, drawing, finishing, fabricating and coating. Further, if a domestic iron and steel product is taken out of the US for any part of the manufacturing process, it becomes foreign source material. However, raw materials such as iron ore, limestone and iron and steel scrap are not covered by the AIS requirement, and the material(s), if any, being applied as a coating are similarly not covered. Non-iron or steel components of an iron and steel product may come from non-US sources. For example, for products such as valves and hydrants, the individual non-iron and steel components do not have to be of domestic origin.

Municipal Castings: Municipal castings are cast iron or steel infrastructure products that are melted and cast. They typically provide access, protection, or housing for components incorporated into utility owned drinking water, storm water, wastewater, and surface infrastructure. They are typically made of grey or ductile iron, or steel. Examples of municipal castings include access hatches, ballast screen, benches, bollards, cast bases, cast iron hinged hatches, cast iron riser rings, catch basin inlets, cleanout/monument boxes, construction covers and frames, curb and corner guards, curb openings, detectable warning plates, downspout shoes, drainage grates, frames & curb inlets, inlets, junction boxes, lampposts, manhole covers, rings & frames, risers, meter boxes, steel hinged hatches, steel riser rings, trash receptacles, tree grates, tree guards, trench grates, and valve boxes.

Structural Steel: Structural steel is rolled flanged shapes, having at least one dimension of their cross-section 3 inches or greater, which are used in the construction of bridges, buildings, ships, railroad rolling stock, and for numerous other constructional purposes. Such shapes are designated as wide-flange shapes, standard I-beams, channels, angles, tees and zees. Other shapes include H-piles, sheet piling, tie plates, cross ties, and those for other special purposes.

Reinforced Precast Concrete: While reinforced precast concrete may not be at least 50% iron or steel, in this particular case, the reinforcing rebar must be produced in the US and meet the same standards as for any other iron or steel product. Additionally, the casting of the concrete product must take place in the US. The cement and other raw materials used in concrete production are not required to be of domestic origin. If the reinforced concrete is cast at the construction site, the reinforcing rebar is considered to be a construction material and must be produced in the US.

Construction Materials subject to AIS: Construction materials are those articles, materials, or supplies made primarily of iron and steel, that are permanently incorporated into the project, not including mechanical and/or electrical components, equipment and systems. Some of these products may overlap with what is also considered "structural steel". This includes, but is not limited to, the following products: welding rods, wire rod, bar, angles, concrete reinforcing bar, wire, wire cloth, wire rope and cables, tubing, framing, joists, trusses, fasteners (i.e., nuts and bolts), decking, grating, railings, stairs, access ramps, fire escapes, ladders, wall panels, dome structures, roofing, ductwork, surface drains, cable hanging systems, manhole steps, fencing and fence tubing, guardrails, doors, gates, and screens.

Construction Materials not subject to AIS: Mechanical and/or electrical components, equipment and systems are not considered construction materials. Mechanical equipment is typically that which has motorized parts and/or is powered by a motor. Electrical equipment is typically any machine powered by electricity and includes components that are part of the electrical distribution system.

The following examples, including their appurtenances necessary for their intended use and operation, are NOT considered construction materials: pumps, motors, gear reducers, drives, variable frequency drives (VFDs), mixers, blowers/aeration equipment, compressors, meters, electric/pneumatic/manual accessories used to operate valves (such as valve actuators), gates, motorized screens (such as traveling screens), sensors, controls, switches, supervisory control and data acquisition (SCADA), membrane bioreactor systems, membrane filtration systems, filters, clarifiers and clarifier mechanisms, rakes, grinders, disinfection systems, dewatering equipment, presses (including belt presses), conveyors, cranes, HVAC (excluding ductwork), water heaters, heat exchangers, generators, cabinetry and housings (such as electrical boxes/enclosures), lighting fixtures, electrical conduit, emergency life systems, metal office furniture, shelving, laboratory equipment, and analytical instrumentation.

Items temporarily used during construction, which are removed from the project site upon completion of the project, are not required to be made of U.S. Iron or Steel. For example, trench boxes or scaffolding are not considered construction materials subject to AIS requirements.

Incidental Components compliant with AIS under the De Minimis Waiver: This waiver permits the use of de minimis incidental components that may otherwise be prohibited under AIS. These de minimis items may cumulatively comprise no more than a total of 5 percent of the total cost of the materials used in and incorporated into the project. The cost of an individual item may not exceed 1 percent of the total cost of the materials used in and incorporated into the project.

These items are miscellaneous, generally low-cost components that are essential for, but incidental to, the construction and are permanently incorporated into the project. For many of these incidental components, the country of manufacture and the availability of alternatives are not always readily or reasonably identifiable prior to procurement in the normal course of business. For other incidental components, the country of manufacture may be known, but the miscellaneous character in conjunction with the low cost, individually and in total, as typically procured in bulk, mark them as properly incidental. Examples of incidental components include small washers, screws, fasteners (i.e., nuts and bolts), miscellaneous wire, corner bead, ancillary tube.

Examples of items that are not incidental and are not covered by the De Minimis Waiver include significant process fittings (i.e., tees, elbows, flanges, and brackets), distribution system fittings and valves, force main valves, pipes for sewer collection and/or water distribution, treatment and storage tanks, large structural support structures.

Items covered as compliant under this waiver must be documented in a report to the Owner to demonstrate that they are both incidental and that they fall within the cost allowances of this waiver. The costs of these items must be documented by invoices. The report must include a listing of types and categories of materials to which the waiver is applied, the total cost of incidental components covered by the Waiver for each category, and the calculations by which the total cost of materials incorporated into the project was determined.

Appendix 2 – Sample Certifications
Step Certification

The following information is provided as a sample letter of step certification for American Iron and Steel compliance. Documentation must be provided on company letterhead. This is to be provided by each handler (supplier, fabricator, manufacturer, processor, etc.). Each time a step in the manufacturing process takes place, the handler delivers its work along with a certification of its origin.

Date

Company Name
Company Address
City, State Zip

Subject: American Iron and Steel Step Certification for Project (Insert project name and SRF number)

I, (company representative), certify that the (melting, bending, coating, galvanizing, cutting, etc.) process for (manufacturing or fabricating) the following products and/or materials shipped or provided for the subject project is in full compliance with the American Iron and Steel requirement as mandated in EPA's State Revolving Fund Programs.

List of items, products and/or materials:

If any of the above compliance statements change while providing material to this project we will immediately notify the prime contractor and the engineer.

Signed by company representative

Appendix 2 – Sample Certifications
Final manufacturer certification

The following information is provided as a sample letter of the final manufacturer to certify American Iron and Steel compliance for the entire manufacturing process. Documentation must be provided on company letterhead.

Date

Company Name
Company Address
City, State Zip

Subject: American Iron and Steel Certification for Project (Insert project name and SRF number)

I, (company representative), certify that the following products and/or materials shipped/provided to the subject project are in full compliance with the American Iron and Steel requirement of P.L. 113-76 and as mandated in EPA's State Revolving Fund Programs.

List of items, products and/or materials:

If any of the above compliance statements change while providing material to this project we will immediately notify the prime contractor and the engineer.

Signed by company representative

Appendix 2 – Sample Certifications
Contractor De Minimis Report

Owner: (Owner Name)
SRF Project No: (SRF Number)
Project Description: (Contract title or brief description)
Date: (Date of report)
Submitted by (name & title): (Contractor representative)
Company Name

LIST OF MATERIALS OR CATEGORIES OF MATERIALS PERMANENTLY INCORPORATED INTO THE PROJECT	COST
Category or Item	$1,000.00
Category or Item	$1,000.00
Category or Item	$1,000.00
Category or Item	$1,000.00
Category or Item	$1,000.00
Category or Item	$1,000.00
Category or Item	$1,000.00
Category or Item	$1,000.00
Category or Item	$1,000.00
Category or Item	$1,000.00
Total Permanent Materials	**$10,000.00**

1 % of total material cost	**$100.00**	**Maximum cost for individual item waived**
5 % of total material cost	**$500.00**	**Maximum cumulative cost for category waived**

LIST OF MATERIALS OR CATEGORIES OF MATERIALS COVERED BY DE MINIMIS WAIVER	COST	COMPLIANT (Yes/No)
Category or Item	$100.00	Yes
Category or Item	$100.00	Yes
Category or Item	$100.00	Yes
Category or Item	$100.00	Yes
Category or Item	$100.00	Yes
Total De Minimis Items	**$500.00**	Yes

INVOICES ATTACHED FOR DE MINIMIS ITEMS.

Appendix 3 – P.L. 113-76, Consolidated Appropriations Act, 2014

The Act states:

Sec. 436 (a)(1) None of the funds made available by a State water pollution control revolving fund as authorized by title VI of the Federal Water Pollution Control Act (33 U.S.C. 1381 et seq.) or made available by a drinking water treatment revolving loan fund as authorized by section 1452 of the Safe Drinking Water Act (42 U.S.C. 300j–12) shall be used for a project for the construction, alteration, maintenance, or repair of a public water system or treatment works unless all of the iron and steel products used in the project are produced in the United States.

(2) In this section, the term ''iron and steel products'' means the following products made primarily of iron or steel: lined or unlined pipes and fittings, manhole covers and other municipal castings, hydrants, tanks, flanges, pipe clamps and restraints, valves, structural steel, reinforced precast concrete, and construction materials.

(b) Subsection (a) shall not apply in any case or category of cases in which the Administrator of the Environmental Protection Agency (in this section referred to as the ''Administrator'') finds that—

(1) applying subsection (a) would be inconsistent with the public interest;

(2) iron and steel products are not produced in the United States in sufficient and reasonably available quantities and of a satisfactory quality; or

(3) inclusion of iron and steel products produced in the United States will increase the cost of the overall project by more than 25 percent.

(c) If the Administrator receives a request for a waiver under this section, the Administrator shall make available to the public on an informal basis a copy of the request and information available to the Administrator concerning the request, and shall allow for informal public input on the request for at least 15 days prior to making a finding based on the request. The Administrator shall make the request and accompanying information available by electronic means, including on the official public Internet Web site of the Environmental Protection Agency.

(d) This section shall be applied in a manner consistent with United States obligations under international agreements.

(e) The Administrator may retain up to 0.25 percent of the funds appropriated in this Act for the Clean and Drinking Water State Revolving Funds for carrying out the provisions described in subsection (a)(1) for management and oversight of the requirements of this section.

(f) This section does not apply with respect to a project if a State agency approves the engineering plans and specifications for the project, in that agency's capacity to approve such plans and specifications prior to a project requesting bids, prior to the date of the enactment of this Act.

TECHNICAL SPECIFICATIONS

SECTION 01020
ALLOWANCES

PART 1 – GENERAL

A. The Contractor shall include in his bid proposal the allowances stated herein. The final amount of any allowance item listed herein shall be adjusted accordingly by change order to reflect actual cost.

PART 2 – PRODUCT

A. The Contractor shall allow the sum indicated in the Bid Form for Supplemental Work Allowance (SWA). SWA shall be utilized to incorporate cost changes for any additional authorized work into the scope of work up to the amount in the Bid Form. Contract change orders shall be enforced for contract changes over and above this amount. These SWA's shall authorize the Contractor to perform additions to the work, but the Contractor shall perform no work until written authorization has been delivered to the Contractor by the Owner/Engineer. Contractor should not expect that any SWA's will be issued; SWA's shall be issued at the discretion of the Owner only.

The value of any work covered by a SWA shall be determined in one of the following ways:

1. Where the work involved is covered by unit prices contained in the Contract Documents, by application of unit prices to the quantities of the item involved (subject to the provisions of the General Conditions).

2. By mutual acceptance of a lump sum by Contractor and the Owner.

3. On the basis of the cost of the work plus a Contractor's Fee for overhead and profit.

B. The Contractor shall allow the sum indicated in the Bid Form for Electrical Service Allowance. The Electrical Service Allowance shall be utilized to reflect the actual cost of installation/establishment of utility power at the site, including any fees associated with establishing service. Georgia Power will be responsible for bringing power to the site and establishing a metered service. Should the Contractor require any overhead or profit for allowing such a sum within his/her bid, that amount should be added into the line item of their choosing. Any additional cost associated with coordinating the work with Georgia Power shall be included under the line item of the Contractor's choosing.

C. The Contractor shall allow the sum indicated in the Bid Form for Natural Gas Service Allowance. The Natural Gas Service Allowance shall be utilized to reflect the actual cost of installation/establishment of gas service at the auxiliary power supply on site, including any fees associated with establishing service. Atlanta Gas Light will be responsible for bringing power to the site and establishing a metered service. Should the Contractor require any overhead or profit for allowing such a sum within his/her bid, that amount should be added into the line item of their choosing. Any additional cost associated with coordinating the work with Atlanta Gas Light shall be included under the line item of the Contractor's choosing.

D. The Contractor shall allow the sum indicated in the Bid Form for Groundwater Wells #4 & #5 Rehabilitation Allowance. The Groundwater Wells #4 & #5 Rehabilitation Allowance shall be utilized to engage the services of a hydrogeologist to provide testing oversight/inspection and prepare and submit final water quality/pump test report for each well; allowance shall also be used to engage a laboratory and sub-contractor(s) to provide sediment removal, air burst cleaning, post-cleaning CCTV, 72-hr pump test, data reporting/record keeping, water quality laboratory testing, and all associated and ancillary work required per Spec. Section 80001. Should the Contractor require any overhead or profit for allowing such a sum within his/her bid, that amount should be added into the line item of their choosing. Any additional cost associated with coordinating the work shall be included under the line item of the Contractor's choosing.

PART 3 – EXECUTION

A. Amounts stated shall include all taxes, coordination and handling that may be required to provide the equipment to the owner. Owner may choose to delay the purchase of equipment to the end of the Contract.

END OF SECTION

SECTION 01025
MEASUREMENT AND PAYMENT

PART 1 – GENERAL

1.01 SCOPE OF WORK

A. This Section describes the methods by which measurement will be made of the quantities for which payment will be made for the Project.

B. The Bid lists each item of the Project for which payment will be made. No payment will be made for any items other than those listed in the Bid.

C. Required items of work and incidentals necessary for the satisfactory completion of the work which are not specifically listed in the Bid, and which are not specified in this Section to be measured or to be included in one of the items listed in the Bid, shall be considered as incidental to the work and whose cost shall be included in the item of the Bidder's choice. All costs thereof, including Contractor's overhead costs and profit, shall be considered as included in the lump sum or unit prices bid for the various Bid items. The Contractor shall prepare the Bid accordingly.

D. Work includes furnishing all labor, equipment, tools and materials, which are not furnished by the Owner and performing all operations required to complete the work satisfactorily, in place, as specified and as indicated on the Drawings.

1.02 MEASUREMENT OF WORK

A. Measurement methods delineated in the individual specification sections complement the criteria of this section. In the event of conflict, the requirements of the individual specification section govern.

B. Work shall be measured by the Engineer or his representative with assistance from the Contractor prior to preparation of a payment request by the Contractor.

C. Unit quantities that are measured in place shall be measured as they are placed. The Contractor shall give the Engineer a minimum of two days' notice for making all required measurements.

D. Materials that must be measured as delivered shall be measured at the time of delivery by the Engineer or his representative; the Contractor shall provide sufficient advance notice so that such measurements can be made.

E. Work necessary for a complete and operational job, such as relocation of mailboxes

or fences, removal of trees, relocation of utilities, graveling / maintaining driveways and driving lanes, field engineering, clearing and grubbing, traffic control, etc., not specifically identified as a pay item shall be included in the unit price bid of the Bidder's choosing. No additional payments will be made for such activities.

1.03 ESTIMATED QUANTITIES

All estimated quantities for unit price items, stipulated in the BID FORM, or other Contract Documents, are approximate and are to be used as a basis for comparing the bids submitted for the Project. The actual amounts of work done and materials furnished under unit price items may differ from the estimated quantities. The basis of payment for work and materials will be the actual amount of work done and materials furnished. The Contractor agrees to make no claim for damages, anticipated profits or otherwise on account of any difference between the amounts of work actually furnished and the estimated amounts included in the BID FORM. The Contractor will not be paid for any work which exceeds the quantity set forth in the BID FORM without a change order issued before the work is performed unless specifically ordered in writing by the Engineer. The Contractor will provide assistance to the Engineer to check quantities and elevations when so requested.

1.04 MEASUREMENT OF QUANTITIES

A. Measurement by Weight – Concrete reinforcing steel, rolled or formed steel or other metal shapes will be measured by handbook weights. Welded assemblies will be measured by handbook or scale weight.

B. Measurement by Volume – Measured by cubic dimension using mean length, width and height or thickness.

C. Measurement by Area – Measured by square dimension using mean length and width or radius.

D. Linear Measurement – Measured by linear dimension, at the item centerline or mean chord.

E. Stipulated Sum/Price Measurement – Items measured by weight, volume, area, or linear means or combination, as appropriate, as a completed item or unit of the Work.

1.05 PROGRESS PAYMENTS

A. Progress payments shall be based on percentage of work complete for lump sum pay items and units installed for unit price pay items.

B. All items of Work not specifically listed in the Bid Schedule shall be considered incidental to the construction, and the cost of all such work and material shall be

included in the item of the Contractors choice.

C. All items listed for measurement and payment shall include all materials, labor, and equipment necessary to successfully and satisfactorily complete Work specified.

D. Payment – The Contractor will receive payment only for the items listed in the Bid Schedule of his contract, and no separate payments will be made for the work under any section of the Contract Documents except as provided for in the Bid Form. Where measurements are required to be made by the Engineer, for the payment of a pay item, the failure of the Contractor to give the adequate notification or failure of the Contractor to give the engineer assistance for the measurement shall result in the forfeiture of payment for the work or item which was not measured.

1.06 SUPPLEMENTAL WORK ALLOWANCE

A. Supplemental Work Allowances (SWA's) shall be utilized to incorporate cost changes for any additional authorized work into the scope of work up to the amount budgeted in the BID FORM. Contract change orders shall be enforced for contract changes over and above the amount budgeted as SWA. SWA's shall authorize the Contractor to perform additions to work, but the Contractor shall perform no work until written authorization has been delivered to the Contractor by the Engineer or Owner. Contractor should not expect that any SWA's will be issued; SWA's shall be issued at the discretion of the Owner only.

The value of any work covered by a SWA shall be determined in one of the following ways:

1. Where the work involved is covered by unit prices contained in the Contract Documents, by application of unit prices to the quantities of the item involved (subject to the provisions of General Conditions, Article 11, Paragraph 11.3 inclusive).

2. By mutual acceptance of a lump sum by Contractor and the Owner.

3. On the basis of the cost of the work plus a Contractor's Fee for overhead and profit. This basis shall be as established for Change Orders in General Conditions.

PART 2 – PRODUCTS

2.01 STORED MATERIALS

A. Partial payment shall be made for approved materials stored at the project site, provided invoices for said materials are furnished in accordance with payment request submittal and shop drawings for said materials have been approved.

PART 3 – EXECUTION

3.01 CLEARING & GRUBBING

A. Measurement: Measurement for Clearing & Grubbing shall be on a lump sum basis and shall include all clearing & grubbing required for the project site, including the wells site & along the proposed water main alignment.

B. Payment: Payment for Clearing & Grubbing shall be on the basis of the lump sum price provided in the BID FORM and includes clearing and grubbing for all areas shown in the plans where the proposed work conflicts with existing vegetation/trees, and includes all trimming, tree removal, clearing, grubbing, root raking, hauling, disposal, and all labor, materials, tools, and equipment required.

3.02 DEMOLITION

A. Measurement: Measurement for Demolition shall be on a lump sum basis.

B. Payment: Payment for Demolition shall be on the basis of the lump sum price provided in the BID FORM and includes the demolition/removal of all existing site features in conflict with the proposed improvements as shown on the Plans, and includes hauling, disposal, and all labor, materials, tools, and equipment required.

3.03 GROUNDWATER WELLS #4 & #5 IMPROVEMENTS COMPLETE

A. Measurement: Measurement for Groundwater Wells #4 & #5 Improvements Complete shall be on a lump sum basis.

B. Payment: Payment for Groundwater Wells #4 & #5 Improvements Complete shall be on the basis of the lump sum price provided in the BID FORM. Payment shall include all ancillary labor, materials, tools, testing, hauling/transportation, mobilization, and equipment required for a complete and functional project, including but limited to:

- Site grading, including all import fill material and removal, hauling, and disposal of excess materials
- Gravel access drive & well site pad (incl. Tensar geogrid & GAB)
- Concrete sidewalk/walking areas and external chemical storage areas
- Protective bollards
- Yard hydrant installation (incl. all valves, fittings, etc.)
- Asphalt parking area (incl. Tensar geogrid & GAB)
- Chain link security fencing & gates
- Two (2) Groundwater Wells construction
    - Grundfos submersible pumps
    - Cables, supports, brackets, centralizers, hardware, etc.

    - Electrical & controls improvements
    - Discharge piping, fittings, transitions/connections, valves, & well casing pipe
    - Well pump enclosures
    - Support slabs (incl. Tensar geogrid & crushed stone)
    - All other ancillary and miscellaneous work required to install the groundwater wells in accordance with the Construction Plans and Spec. Sections 432133 & 02514

- Chemical feed building
    - Foundation installation per Structural Sheets
    - Prefabricated concrete structure installed per drawings
    - Mechanical/HVAC improvements
    - Electrical improvements (incl. wiring, conduits, equipment, etc.)
    - Interior/exterior lighting improvements
    - All plumbing fixtures/appurtenances
    - Water heater
    - Water service tap & lines
    - Chemical feed system for fluoride & chlorine
        - Eight (8) Grundfos chemical feed pumps per Spec. Section 70001
        - Feed line tubing/piping, valves, fittings, saddle taps, injection quills, hardware, etc.
        - Raceway & trench cover installation
    - San. sewer drain lines, cleanouts, and saddle tap to existing main
    - Chemical containment pallets & ramps
    - Ultrasonic flow meters
    - Flanged DI piping, fittings, & valves
    - Pipe supports
    - Pipe penetrations (incl. coring, link seals, & grouting)
    - Gutters & downspouts
    - All other ancillary and miscellaneous work required to install the chemical feed building in accordance with Spec. Section 02513 & the applicable drawings

- Covered steel structure
    - Stamped engineering design plans and applicable fees
    - Foundation/footers per detail & note on Sheet C9.4
    - Steel structure/shelter installed per detail drawings
    - Gutters & downspouts
    - All other ancillary and miscellaneous work required to install the steel structure in accordance with Section 90001 and the applicable drawings (provided by Renegade)

- Isolated chemical spill containment system (incl. floor drains, piping, fittings, and precast structures.
- All restrained joint & flanged ductile iron yard piping, fittings, & valves located up to and including the 8”x6” reducer located outside of the backflow vault (see Sheets C4.0 & C4.1)
- Pipe coating/lining and painting
- Backflow installation
    - Double Check Detector Assembly (DCDA)
    - Pipe supports & blocking
    - Precast concrete vault
    - Access hatch
    - Ladder
    - Stone bedding & Tensar geogrid
    - Pipe, fittings, and valves

- Natural gas generator
    - Concrete generator slab (incl Tensar geogrid & crushed stone)
    - Generator
    - Electrical work

- Electrical/Controls & SCADA improvements, implementation, and ancillary items not furnished & installed by the utility provider (GA Power)
- All other ancillary and miscellaneous items required to provide a complete and functional project as shown and described in the Construction Plans, Details, and Specifications.

3.04 WATER MAIN – OPEN CUT

A. Measurement: Measurement for Water Main – Open Cut shall be on a per linear foot basis.

B. Payment: Payment for Water Main – Open Cut shall be on the basis of the unit price provided in the BID FORM and shall include the cost of pipe of various materials and sizes, excavation, bedding, & backfill, all adaptors/transitions/couplings, thrust blocking, restrained joint glands/gaskets, fittings (bends, tees, crosses, reducers, etc.), connecting to existing water lines, pipe cutting, and all freight/hauling, labor, materials, tools, testing, and equipment required.

3.05 WATER MAIN – HORIZONTAL DIRECTIONAL DRILL

A. Measurement: Measurement for Water Main – Horizontal Directional Drill shall be on a per linear foot basis.

B. Payment: Payment for Water Main – Horizontal Directional Drill shall be on the basis of the unit price provided in the BID FORM and shall include the cost of

various sizes and materials of pipe, excavation, bedding, & backfill, pipe cutting, fusing/welding, directional drill operation, drilling fluid, excavation of launching & receiving pits, and all freight/hauling, labor, materials, tools, testing, and equipment required.

3.06 WATER MAIN – OPEN CUT ROADS

A. Measurement: Measurement for Water Main – Open Cut Roads shall be on a per linear foot basis.

B. Payment: Payment for Water Main – Open Cut Roads shall be on the basis of the unit price provided in the BID FORM and shall include the cost of pipe of various materials and sizes, excavation, bedding, & backfill, Class "A" concrete, asphalt surface course, all adaptors/transitions/couplings, thrust blocking, restrained joint glands/gaskets, fittings (bends, tees, crosses, reducers, etc.), connecting to existing water lines, pipe cutting, and all freight/hauling, labor, materials, tools, testing, and equipment required.

3.07 TAPPING SLEEVE & VALVE INSTALLATION

A. Measurement: Measurement for Tapping Sleeve & Valve Installation shall be on a per each basis.

B. Payment: Payment for Tapping Sleeve & Valve Installation shall be on the basis of the unit price provided in the BID FORM and shall include the cost of tapping sleeve and valve assemblies of various sizes, tapping/connecting to existing water mains, valve riser & box/cover, and all freight/hauling, labor, materials, tools, testing, and equipment required.

3.08 CUT, CAP, & ABANDON WATER LINES

A. Measurement: Measurement for Cut, Cap, & Abandon Water Lines shall be on a per each basis.

B. Payment: Payment for Cut, Cap, & Abandon Water Lines shall be on the basis of the unit price provided in the BID FORM and shall include the cost of all excavations, isolating lines, pipe cutting, installation of two (2) ductile iron caps, backfill, and all freight/hauling, labor, materials, tools, and equipment required.

3.09 WATER SERVICE TRANSFER

A. Measurement: Measurement for Water Service Transfer shall be on a per each basis.

B. Payment: Payment for Water Service Transfer shall be on the basis of the unit price provided in the BID FORM and shall include the cost of disconnecting the existing pipe, new piping/tubing to match existing size, directional drill operation (if required), couplings/adapters, and all freight/hauling, labor, materials, tools,

testing, and equipment required to transfer existing water service lines to the new main.

3.10 TRAFFIC CONTROL

A. Measurement: Measurement for Traffic Control shall be on a lump sum basis for the entire project, including the wells site and along the proposed water main alignment shown in the BID FORM.

B. Payment: Payment for Traffic Control shall be at the lump sum price provided in the BID FORM and shall include all traffic control operations, labor, materials, signage, procedures, devices, and equipment required to adhere to the latest MUTCD, GDOT, and local standards and recommendations throughout construction.

3.11 EROSION CONTROL

A. Measurement: Measurement for Erosion Control shall be on a lump sum basis for the entire project, including the wells site and along the proposed water main alignment.

B. Payment: Payment for Erosion Control shall be on the basis of the lump sum price provided in the BID FORM and shall include all NPDES permitting, NOI filing, inspection, sampling, record keeping, reporting, ES&PC signage, silt fence, check dams, temporary & permanent grassing, NOT filing, and all labor, materials, tools, testing, and equipment required.

3.12 LANDSCAPING REPLACEMENTS

A. Measurement: Measurement for Landscaping Replacements shall be on a lump sum basis.

B. Payment: Payment for Landscaping Replacements shall be on the basis of the lump sum price provided in the BID FORM and shall include the cost of replacing and/or relocating in kind any and all disturbed landscaping and landscaping features, including fencing, shrubbery, trees, planter beds, irrigation systems, specific grassing, planter beds, and all hauling/freight, labor, materials, tools, testing, and equipment required.

END OF SECTION

SECTION 01300
SUBMITTALS

PART 1 – GENERAL

1.01 SECTION INCLUDES

A. Submittal Procedures

B. Construction Progress Schedules

C. Product Data

D. Shop Drawings

E. Samples

F. Design Data

G. Test Reports

H. Certificates

I. Manufacturer's Instructions

J. Manufacturer's Field Reports

K. Erection Drawings

1.02 RELATED SECTIONS – NOT USED

1.03 SUBMITTAL PROCEDURES

A. Deliver submittals to Engineer in acceptable form, either electronic copy or three (3) hard copies.

B. Sequentially number the transmittal form. Revise submittals with original number and a sequential alphabetic suffix. Resubmit as specified for initial submittal. Indicate on revised drawings all changes which have been made including those requested by the Engineer.

C. Identify Project, Contractor, Subcontractor or supplier; pertinent drawing and detail number, and specification section number, as appropriate.

D. Apply Contractor's stamp, signed or initialed certifying that review, approval, verification of Products required, field dimensions, adjacent construction work and coordination of information is in accordance with the requirements of the work and Contract Documents. Submittal without the Contractor's stamp will be returned to Contractor without Engineer's review.

E. Make all submittals far enough in advance of scheduled dates for installation to provide all required time for reviews, for securing necessary approvals, for possible revision and resubmittal, and for placing orders and securing delivery. In scheduling, allow sufficient time for the Engineer's review following the receipt of the submittal. Coordinate submission of related items. For each submittal for review, allow 15 days excluding delivery time to and from the Contractor.

F. Identify variations from Contract Documents and Product or system limitations which may be detrimental to successful performance of the completed work.

G. Provide space for Contractor and Architect/Engineer review stamps.

H. When revised for resubmission, identify all changes made since previous submission.

I. Distribute copies of reviewed submittals to concerned parties. Instruct recipients to promptly report any inability to comply with requirements.

1.04 CONSTRUCTION PROGRESS SCHEDULES

A. Submit initial schedule in triplicate within 15 days after date established in Notice to Proceed.

B. After reviewed by the Engineer, revise and resubmit as required.

C. Submit revised schedules with each Application for Payment, identifying changes since previous version.

D. Submit a computer generated or horizontal bar chart with separate line for each major portion of work or operation, identifying first workday of each week.

E. Show complete sequence of construction by activity, identifying work of separate stages and other logically grouped activities. Indicate the early and late start, early and late finish, float dates, and duration.

F. Indicate estimated percentage of completion for each item of work at each submission.

G. Indicate submittal dates required for shop drawings, product data, samples, and

product delivery dates, including those furnished by Owner and required by Allowances.

1.05 PRODUCT DATA

A. Product Data for Review:
   1. Submitted to Engineer for review for the limited purpose of checking for conformance with information given and the design concept expressed in the contract documents.

   2. After review, provide copies and distribute in accordance with Submittal Procedures article above.

B. Submit the number of copies which the Contractor requires, plus one (1) copy which will be retained by the Engineer or electronic copy.

C. Mark each copy to identify applicable products, models, options, and other data. Supplement manufacturers' standard data to provide information specific to this Project.

D. Indicate Product utility and electrical characteristics, utility connection requirements, and location of utility outlets for service for functional equipment and appliances.

E. After review, distribute in accordance with the Submittal Procedures article above.

1.06 SHOP DRAWINGS

A. Contractor shall submit a minimum of three (3) hard copies OR an electronic copy of each shop drawing to the Engineer for review.

B. Submitted to Engineer for review for the limited purpose of checking for conformance with information given and the design concept expressed in the contract documents. Review of shop drawings by Engineer shall not relieve Contractor of his responsibility for the accuracy of the shop drawings for the furnishing of all materials and equipment required by the contract even though such items may not be indicated on the shop drawings reviewed by Engineer.

C. Shop drawings shall include applicable technical information, drawings, diagrams, performance curves, schedules, templates, calculations, instructions, measurements and similar information as applicable to the specific item for which the shop drawing is prepared.

D. Do <u>not</u> use Engineer's Drawings for shop or erection purposes.

E. Each shop drawing copy shall bear a Contractor's stamp showing they have been checked. Shop drawings submitted to the Engineer without the Contractor's stamp will be returned to the Contractor without review.

F. No review will be given to partial submittals of shop drawings for items which interconnect and/or are interdependent. It is the Contractor's responsibility to assemble the shop drawings for all such interconnecting and/or interdependent items, check them and then make one submittal to the Engineer.

G. Schedule of Submittals – Within 30 days of Contract award and prior to any shop drawing submittal, the Contractor shall submit a schedule showing the estimated submittal date and the desired approval date for each shop drawing anticipated. Time lost due to unacceptable submittals shall be the Contractor's responsibility.

1.07 SAMPLES

A. Samples for Review -

1. Submitted to Engineer for review for the limited purpose of checking for conformance with information given and the design concept expressed in the contract documents.

2. After review, produce duplicates and distribute in accordance with SUBMITTAL PROCEDURES article above.

B. Samples for Information –

1. Submitted for the Engineer's knowledge as contract administrator or for the Owner.

C. Include identification on each sample, with full Product information.

D. Submit the number of samples specified in individual specification sections; one of which will be retained by Engineer.

E. Review samples which may be used in the Work are indicated in individual specification sections.

F. Samples will not be used for testing purposes unless specifically stated in the specification section.

1.08 DESIGN DATA

A. Submit for the Engineer's knowledge as contract administrator or for the Owner.

B. Submit for information for the limited purpose of assessing conformance with information given and the design concept expressed in the contract documents.

1.09 TEST REPORTS

A. Submit for the Engineer's knowledge as contract administrator or for the owner.

B. Submit test reports for information for the limited purpose of assessing conformance with information given and the design concept expressed in the contract documents.

1.10 CERTIFICATES

A. When specified in individual specification sections, submit certification by the manufacturer, installation/application subcontractor, or the Contractor to Engineer, in quantities specified for product Data.

B. Indicate material or product conforms to or exceeds specified requirements. Submit supporting reference data, affidavits, and certifications as appropriate.

C. Certificates may be recent or previous test results on material or Product, but must be acceptable to Engineer.

1.11 MANUFACTURER'S INSTRUCTION

A. When specified in individual specification sections, submit printed instructions for delivery, storage, assembly, installation, start-up, adjusting, and finishing, to Engineer for delivery to Owner in quantities specified for Product Data.

B. Indicate special procedures, perimeter conditions requiring special attention, and special environmental criteria required for application or installation.

1.12 MANUFACTURER'S FIELD REPORTS

A. Submit reports for the Engineer's benefit as contract administrator or for the Owner.

B. Submit report in duplicate within 15 days of observation to Engineer for information.

C. Submit for information for the limited purpose of assessing conformance with information given and the design concept expressed in the contract documents.

1.13 ERECTION DRAWINGS

A. Submit drawings for the Engineer's benefit as contract administrator or for the Owner.

B. Submit for information for the limited purpose of assessing conformance with information given and the design concept expressed in the contract documents.

C. Data indicating inappropriate or unacceptable work may be subject to action by the Engineer or Owner.

1.14 REVIEWED SHOP DRAWINGS

A. Engineer Review –

3. Acceptable submittals will be marked "Approved." A minimum of one (1) copy will be retained by the Engineer for Engineer's and the Owner's use and the remaining copies will be returned to the Contractor.

4. Submittals requiring minor corrections before the product is acceptable will be marked "Furnish as Corrected." The Contractor may order, fabricate and shop the items included in the submittals provided the indicated corrections are made.

5. Submittals marked "Revise and Submit" must be revised to reflect required changes and the initial review procedure repeated.

6. The "Rejected" notation is used to indicate products which are not acceptable. Upon return of a submittal so marked, the Contractor shall repeat the initial review procedure utilizing acceptable products.

7. Only two copies of items marked "Revise and Submit" and "Rejected" will be reviewed and marked. One copy will be retained by the Engineer and the other copy with all remaining unmarked copies will be returned to the Contractor for resubmittal.

B. No work or products shall be installed without a drawing or submittal bearing the "Approved" or "Furnish as Corrected" notation. The Contractor shall maintain at the job site a complete set of shop drawings bearing the Engineer's stamp.

C. Substitutions – In the event the Contractor obtains the Engineer's approval for the use of products other than those which are listed first in the Contract Documents, the Contractor shall, at the Contractor's own expense and using methods approved by the Engineer, make any changes to structures, piping and electrical work that may be necessary to accommodate these products.

D. Use of the “Approved” or “Furnish as Corrected” notation on shop drawings or other submittals is general and shall not relieve the Contractor of the responsibility of furnishing products of the proper dimension, size, quality, quantity, materials and all performance characteristics, to efficiently perform the requirements and intent of the Contract Documents. The Engineer’s review shall not relieve the Contractor of the responsibility of errors of any kind on the shop drawings. Review is intended only to assure conformance with the design concept of the Project and compliance with the information given in the Contract Documents.

PART 2 – PRODUCTS: - NOT USED

PART 3 – EXECUTION: - NOT USED

END OF SECTION

SECTION 01410
TESTING SERVICES

PART 1 – GENERAL

1.01 SECTION INCLUDES

A. Selection and Payment

B. Contractor Submittals

C. Testing Agency Responsibilities

D. Testing Agency Reports

E. Limits on Testing Authority

F. Contractor Responsibilities

G. Schedule of Tests

1.02 RELATED SECTIONS

A. Testing and approvals required by public authorities.

B. Section 01300 – Submittals – Manufacturer's Certificates.

C. Section 01701 – Contract Closeout – Project Record Documents.

1.03 REFERENCES

A. ASTM C 802-87 – Practice for Conducting an Interlaboratory Test Program to Determine the Precision of Test Methods for Construction.

B. ASTM C 1077-92 – Practice for Laboratories Testing Concrete and Concrete Aggregates for Use in Construction and Criteria for Laboratory Evaluation.

C. ASTM C 1093-88 – Practice for Accreditation of Testing Agencies for Unit Masonry.

D. ASTM D 290-85 – recommended Practice for Bituminous Mixing Plant Inspection.

E. ASTM D 3740-92 – Practice for Evaluation of Agencies Engaged in Testing and/or Inspection of Soil and Rock as Used in Engineering Design and Construction.

F. ASTM D 4561-86 – Practice for Quality Control Systems for an Inspection and Testing

Agency for Bituminous Paving Materials.

G. ASTM E 329-93 – Practice for Use in the Evaluation of Inspection and Testing Agencies as Used in Construction.

H. ASTM E 543-93 – Practice for Determining the Qualification of Nondestructive Testing Agencies.

I. ASTM E 548-93 – Practice for Preparation of Criteria for Use in the Evaluation of Testing Laboratories and Inspection Bodies.

J. ASTM E 699-79 (Reapproved 19910 – Practice for Criteria for Evaluation of Agencies Involved in Testing, Quality Assurance, and Evaluating Building Components in Accordance with Test Methods Promulgated by ASTM Committee E6.

1.04 SELECTION AND PAYMENT

A. Contractor shall select, and Owner shall approve, a Testing Firm for Contractor to use and employ.

B. Contractor shall be responsible for contracting the services of the approved independent testing agency or laboratory to perform specified testing. **All coordination of testing and payment for services shall be the responsibility of the Contractor. Unless otherwise specifically noted, payment for testing shall be included in the Bid Form Item to which it pertains.**

C. Employment of testing agency or laboratory in no way relieves Contractor of obligation to perform work in accordance with requirements of Contract Documents.

1.05 QUALITY ASSURANCE

A. Comply with requirements of practices listed in paragraph 1.03.

B. Laboratory – Authorized to operate in State in which Project is located.

C. Laboratory Staff – Maintain a full-time registered Engineer on staff to review services.

D. Testing Equipment – Calibrated at reasonable intervals with devices of accuracy traceable to either National Bureau of Standards or accepted values of natural physical constants.

1.06 CONTRACTOR SUBMITTALS

A. Prior to start of Work, submit list of preferred testing laboratory name, address, and telephone number, and names of full-time registered Engineer and responsible officer. Owner may select a firm from list or may request different firm for use in testing.

B. Submit copy of report of laboratory facilities inspection made by Materials Reference Laboratory of National Bureau of Standards during most recent inspection, with memorandum of remedies of any deficiencies reported by the inspection.

1.07 TESTING AGENCY RESPONSIBILITIES

A. Test samples of mixes submitted by Contractor.

B. Provide qualified personnel at site. Cooperate with Engineer and Contractor in performance of services.

C. Perform specified sampling and testing of Products in accordance with specified standards.

D. Ascertain compliance of materials and mixes with requirements of Contract Documents.

E. Promptly notify Engineer and Contractor of observed irregularities or non-conformance of Work or Products.

F. Perform additional tests required by Engineer.

G. Attend Preconstruction meetings and progress meetings.

1.08 TESTING AGENCY REPORTS

A. After each test, promptly submit three (3) copies of report to Engineer and to Contractor.

B. Include:

1. Date issued

2. Project title and number

3. Name of inspector

4. Date and time of sampling or inspection
5. Identification of product and specifications section
6. Location in the Project
7. Type of inspection or test
8. Date of test
9. Results of tests
10. Conformance with Contract Documents

C. When requested by Engineer, provide interpretation of test results.

1.09 LIMITS ON TESTING AUTHORITY

A. Agency or laboratory may not release, revoke, alter, or enlarge on requirements of Contract Documents.

B. Agency or laboratory may not approve or accept any portion of the Work.

C. Agency or laboratory may not assume any duties of Contractor.

D. Agency or laboratory has no authority to stop the Work.

1.10 CONTRACTOR RESPONSIBILITIES

A. Deliver to agency or laboratory at designated location, adequate samples of materials proposed to be used which require testing, along with proposed mix designs.

B. Cooperate with laboratory personnel and provide access to the Work.

C. Provide incidental labor and facilities –

1. To provide access to work to be tested
2. To obtain and handle samples at the site or at source of Products to be tested
3. To facilitate tests
4. To provide storage and curing of test samples

D. Notify Engineer and laboratory 48 hours prior to expected time for operations requiring testing services.

E. Employ services of an independent qualified testing laboratory.

1.11 SCHEDULE OF TESTS

Section	Test *	Frequency *	Date	Performed By	Notes
02200 – Earthwork, Site Grading, & Subgrade Preparation					
Compaction					
	Unpaved & Landscaped with no traffic	1 test per horizontal layer per 10,000 SF of fill area			
	Paved & Pond Levee	1 test per horizontal layer per 5,000 SF of area			
	Building Pad	1 test per horizontal layer per 1,500 SF of fill area. **Minimum of two tests.**			
	Curb & Gutter	1 test per 300 LF			
Import Fill Material Pre-Construction Lab Testing					
	Atterberg Limits	1 Per project			
	Grain Size Analysis/Soil Classification	1 Per project			
	Standard Proctor Density	1 Per project			
	Moisture Content	1 Per project			
	Specific Gravity	1 Per project			
Subgrade					
	Proofrolling	1 Per Layer			
11200 – Water Distribution System					
	Hydrostatic & Leakage	1.5 times the working pressure (no less than 150 psi). Conducted for 2 hours with maintained pressure of 150 psi (200 psi on fire main)			
	Bacteriological Samples	2 taken 24 hours apart after disinfection			
Compaction					
	Traffic Areas	1 per 100 LF or less for each 4 VF of depth			
	Non-Traffic Areas	1 per 500 LF or less for each 4 VF of depth			
Fire Flow		1 per permit			
02530 – Wastewater Collection System					
Start-up		Prior to acceptance of Pump Station			
Drawdown		Prior to acceptance of Pump Station			
Certification		Completion			
Warranty		Completion			
Television Inspection of Sewers		All gravity sewer lines			
Leakage		As necessary			
Compaction					
	Traffic Areas	1 per 100 LF or less for each 4 VF of depth			
	Non-Traffic Areas	1 per 500 LF or less for each 6 VF of depth			
Gravity – Air		[All lines]			

Section	Test *	Frequency *	Date	Performed By	Notes
Gravity - Vacuum		All manholes			
Hydrostatic – Force Main		150 psi for 2 hours			
Deflection		[All lines]			
02310 – Storm Drainage					
Compaction					
	Traffic Areas	1 per 100 LF or less for each 4 VF of depth			
	Non-Traffic Areas	1 per 500 LF or less for each 6 VF of depth			
02720 – Aggregate Base Course (GAB)					
	Base Density	1 test per 5,000 SF			
	Proofroll	1 test per layer of GAB			
02740 – Asphaltic Concrete Base Course					
	Asphalt Extraction & Gradation	1 test per each 250 tons placed			
	Marshall Stability	1 test per each 500 tons placed			
	Core	1 test for each 500 tons placed			
	Field Density	1 test per each 500 tons placed			
02740 – Asphaltic Concrete Binder/Surface Courses					
	Asphalt Extraction & Gradation	No less than 1 test for 500 tons placed; minimum one per road/street.			
	Marshall Stability	Not required			
	Core	No less than 1 test for 500 tons placed; minimum one per road/street.			
	Field Density (nuclear gauge) & Percent Air Voids	No less than 1 test for 500 tons placed; minimum one per road/street.			
02750 – Portland Cement Concrete Paving					
	Mix Designs	1 per mix design			
	Compressive Strength	3 test cylinders for every 30 cubic yards or less of each mix design placed daily			
		1 cylinder broken at 7 days			
		2 cylinders broken at 28 days			
	Slump	1 test for each set of cylinders taken			
03300 – Cast-in-Place Concrete					
	Materials	As necessary			
	Mix Designs	1 per mix design			
	Strength	5 test cylinders for each 50 cy or less of each mix design placed daily (min. of 5 cylinders for each days pour of less than 50 cy)			
		1 cylinder tested at 7 days			
		1 cylinder tested at 14 days			
		2 cylinders tested at 28 days			
		1 cylinder tested at 56 days			
	Slump	1 test per each set of cylinders			
	Air Content	1 test per each set of cylinders			
	Temperature	1 test per each set of cylinders			

** Unless specified otherwise in individual Sections.*

PART 2 – PRODUCTS – Not Used

PART 3 – EXECUTION

3.1.1 Payment

Payment for all testing shall be the responsibility of the Contractor.

END OF SECTION

SECTION 01516
TEMPORARY SANITARY FACILITIES

PART 1 GENERAL

1.01 SCOPE

A. This section is intended to include requirements for temporary sanitary facilities provided by Contractor, including provisions for Contractor's use of existing and permanent facilities.

1.02 REQUIREMENTS INCLUDED

A. Temporary Sanitary Facilities

B. Maintenance and Service

C. Removal

D. Cleaning

1.03 USE OF EXISTING FACILITIES

A. Use of the Owner's existing or new facilities is prohibited. The Contractor will be required to provide their own portable facilities.

1.04 USE OF PORTABLE FACILITIES

A. Contractor shall provide portable sanitary facilities at such places as approved by the Owner.

B. Contractor shall pay all costs for installation, maintenance, and removal of temporary sanitary facilities.

PART 2 PRODUCTS

2.01 MATERIALS

A. Materials may be new or used, adequate to the purpose, which will not create unsanitary conditions.

2.02 TOILET FACILITIES

A. Enclosed portable self-contained units or temporary water closets and urinals,

secluded from public view.

PART 3 EXECUTION

3.01 INSTALLATION

A. Provide facilities at time of site mobilization.

B. Modify and extend service as work progresses.

3.02 MAINTENANCE AND SERVICE

A. Clean areas of facilities weekly and maintain in a sanitary condition.

B. Provide toilet paper, paper towels, and soap in suitable dispensers.

3.03 REMOVAL

A. Remove portable units when other facilities are available or prior to Substantial Completion.

END OF SECTION

SECTION 01701
CONTRACT CLOSEOUT PROCEDURES

PART 1 – GENERAL

1.01 REQUIREMENTS INCLUDED

A. Administrative provisions for Substantial Completion and for final acceptance.

1.02 RELATED REQUIREMENTS

A. Section 01300 – Submittal

1.03 SUBSTANTIAL COMPLETION

A. When the Contractor considers the work substantially complete, he shall prepare a punch list of uncompleted items and send to the Engineer for review. At the same time, the Contractor shall request in writing that the Engineer schedules a pre-final inspection.

B. The Engineer will review the punch list submitted by the Contractor and determine if the project is substantially complete.

C. If the Engineer determines that the project is not substantially complete, he will notify the Contractor in writing which items need to be finished before the project can be considered substantially complete. The Contractor shall continue working to complete all punch list items and resubmit a revised punch list when he considers the work is substantially complete.

D. When the Engineer determines that the work is substantially complete, he will schedule a pre-final inspection with the Owner, Contractor and Engineer. A final punch list will be prepared at this time.

E. After all punch list items have been completed, the Contractor shall send a request in writing to the Engineer to schedule a final inspection. When all punch list items are complete, the Engineer will issue a certificate of substantial completion.

1.04 FINAL COMPLETION

A. When the Contractor considers that all of the work is complete, he shall submit the following certificates:

1. All work has been completed and inspected for compliance with the Contract Documents and all deficiencies listed with the certificate of

substantial completion have been corrected.

2. All equipment and systems have been tested, adjusted and are fully operational.

3. Owner's personnel have been fully instructed in the operation of all equipment (include sign off for each system).

4. Work is complete and ready for final inspection.

B. Should Engineer's inspection find work incomplete, he will promptly notify Contractor in writing listing observed deficiencies.

C. Contractor shall remedy deficiencies and send a request for another final inspection.

D. When Engineer finds work is complete, he will process final pay request documents.

1.05 REINSPECTION FEES

A. Should status of completion of work require reinspection by Engineer due to failure of work to comply with Contractor's claims on pre-final or final inspection, the Owner will back charge the Contractor for each extra reinspection required of the Engineer. The Contractor shall reimburse the Owner by certified check prior to final payment of retainage.

1.06 CLOSEOUT SUBMITTALS

A. Evidence of Compliance with Requirements of Governing Authorities –

1. Certificate of Occupancy as required by local codes.

2. Certificates of Inspection approvals required for plumbing, mechanical and electrical systems as required by local codes if applicable.

B. Project Record Documents – Under provisions of Section 01720.

C. Operation and Maintenance Data – Under provisions of Section 01730.

D. Warranties and Bonds – Under provisions of Section 01740.

E. Keys and Keying Schedule.

F. Evidence of Payment and Release of Liens – In accordance with Conditions of the Contract.

G. Consent of Surety to Final Payment – Consent of Surety is to be sent by Surety directly to Carter and Sloope to the attention of the Project Engineer.

1.07 APPLICATION FOR FINAL PAYMENT

A. Prior to application for final payment, the Contractor shall give the Engineer a list of all additions or deletions not previously approved by change order.

B. The Engineer will review this list and prepare a final closeout change order for the items that are justified by the terms of the contract or approved by field order.

C. After approval of the final closeout change order the Contractor may submit his application for final payment.

PART 2 – PRODUCTS: Not Used.

PART 3 – EXECUTION: Not Used.

END OF SECTION

SECTION 01710
PERIODIC AND FINAL CLEAN-UP

PART 1 – GENERAL

1.01 REQUIREMENTS INCLUDED

A. Final clean-up of site, roadway and buildings.

1.02 DESCRIPTION

A. Execute clean-up prior to inspection for Substantial Completion of the Work.

1.03 DISPOSAL REQUIREMENTS

A. Remove and dispose of waste materials, rubbish, debris and trash in compliance with provisions of governing laws, codes, ordinances and regulations.

1. Do not burn or bury rubbish, trash, debris and waste materials on Project site.

PART 2 – PRODUCTS

2.01 CLEANING MATERIALS

A. Use materials which will not create hazards to health or property, and which will not damage surfaces.

B. Use only materials and methods recommended by manufacturer of material being cleaned.

PART 3 – EXECUTION

3.01 PERIODIC CLEANING

A. On a regular and frequent basis during progress of work, perform cleaning necessary to keep Project site and adjacent properties free from unsightly and unsafe accumulation of scrap and waste materials, debris, rubbish and trash resulting from construction operations.

1. Provide sufficient trash bins and containers for collection of scrap and

waste material, debris, rubbish and trash.

2. Provide separate, closeable top metal containers for collection of oil and paint soaked rags; empty volatile substance cans and other waste products subject to spontaneous combustion.

3. Designate approved eating areas and provide covered containers conforming to local health codes for collection of waste paper and leftover foodstuffs. Enforce usage of containers by workmen.

B. Dispose of scrap and waste materials, debris, rubbish and trash by one of the following optional methods –

1. Provide services of company regularly engaged in refuse disposal operations, including usage of large metal dump-type trash containers.

2. Use own forces and equipment for loading, hauling and disposal.

C. Remove accumulations of scrap and waste materials as bins and containers are filled and not less than once per week.

1. Remove containers containing products subject to spontaneous combustion daily.

2. Remove containers containing waste paper and leftover foodstuff daily.

3. Legally dispose of all waste materials, rubbish, volatile materials and cleaning materials off Project site.

4. Dispose of no materials in waterways.

3.02 DUST CONTROL

A. Site Work – When working on unpaved or disturbed paved streets, Contractor shall maintain a water truck on site for dust control. All dusty work sites in residential areas shall be watered at least twice per day and whenever directed by the Owner's representative.

B. Buildings – During application of finished surface materials, including painting and decorating, employ dust control methods during cleaning operations to prevent dust from contaminating wet and freshly coated surfaces.

3.03 FINAL CLEANING

A. Site Work

1. All piles of dirt and rocks are to be removed from the work areas.

2. All disturbed areas are to be grassed and mulched according to these specifications.

3. All construction debris is to be removed to an approved disposal site.

4. All streets are to be swept with a mechanical sweeper.

B. Buildings

NOTE USED

3.04 INSPECTION

A. Prior to occupancy by Owner of any designated portion of Work, conduct inspection in presence of Owner to verify work is properly clean and ready for acceptance by Owner.

END OF SECTION

SECTION 01740
WARRANTIES AND BONDS

PART 1 - GENERAL

1.01 PROJECT MAINTENANCE AND WARRANTY

A. Maintain and keep in good repair the Work covered by these Drawings and Specifications until acceptance by the Owner.

B. The Contractor shall warrant for a period of one year from the date of Owner's written final acceptance of the Project, that the completed Work is free from all defects due to faulty products or workmanship and the Contractor shall promptly make such corrections as may be necessary by reason of such defects. The Owner will give notice of observed defects with reasonable promptness. In the event that the Contractor should fail to make such repairs, adjustments or other work that may be made necessary by such defects, the Owner may do so and charge the Contractor the cost thereby incurred. The Performance Bond shall remain in full force and effect throughout the warranty period.

C. The Contractor shall not be obligated to make replacements which become necessary because of ordinary wear and tear, or as a result of improper operation or maintenance, or as a result of improper work or damage by another Contractor or the Owner, or to perform any work which is normally performed by a maintenance crew during operation.

D. In the event of multiple failures of major consequences prior to the expiration of the one year warranty described above, the affected unit shall be disassembled, inspected and modified or replaced as necessary to prevent further occurrences. All related components which may have been damaged or rendered non-serviceable as a consequence of the failure shall be replaced. A new 12 month warranty against defective or deficient design, workmanship, and materials shall commence on the day that the item is reassembled and placed back into operation. As used herein, multiple failure shall be interpreted to mean two or more successive failures of the same kind in the same item or failures of the same kind in two or more items. Major failures may include, but are not limited to, cracked or broken housings, piping, or vessels, excessive deflections, bent or broken shafts, broken or chipped gear teeth, premature bearing failure, excessive wear or excessive leakage around seals. Failures which are directly and clearly traceable to operator abuse, such as operations in conflict with published operating procedures or improper maintenance, such as substitution of unauthorized replacement parts, use of incorrect lubricants or chemicals, flagrant over-or under-lubrication and using maintenance procedures not conforming with published maintenance instructions, shall be exempted from the scope of the one year warranty.

Should multiple failures occur in a given item, all products of the same size and type shall be disassembled, inspected, modified or replaced as necessary and rewarranted for one year.

E. The Contractor shall, at Contractor's own expense, furnish all labor, materials, tools and equipment required and shall make such repairs and removals and shall perform such work or reconstruction as may be made necessary by any structural or functional defect or failure resulting from neglect, faulty workmanship or faulty materials, in any part of the Work performed by the Contractor. Such repair shall also include refilling of trenches, excavations or embankments which show settlement or erosion after backfilling or placement.

F. Except as noted on the Drawings or as specified, all structures such as embankments and fences shall be returned to their original condition prior to the completion of the Contract. Any and all damage to any facility not designated for removal, resulting from the Contractor's operations, shall be promptly repaired by the Contractor at no cost to the Owner.

G. The Contractor shall be responsible for all road and entrance reconstruction and repairs and maintenance of same for a period of one year from the date of final acceptance. In the event the repairs and maintenance are not made immediately and it becomes necessary for the owner of the road to make such repairs, the Contractor shall reimburse the owner of the road for the cost of such repairs.

H. In the event the Contractor fails to proceed to remedy the defects upon notification within 15 days of the date of such notice, the Owner reserves the right to cause the required materials to be procured and the work to be done, as described in the Drawings and Specifications, and to hold the Contractor and the sureties on Contractor's bond liable for the cost and expense thereof.

I. Notice to Contractor for repairs and reconstruction will be made in the form of a registered letter addressed to the Contractor at Contractor's home office.

J. Neither the foregoing paragraphs nor any provision in the Contract Documents, nor any special guarantee time limit implies any limitation of the Contractor's liability within the law of the place of construction.

END OF SECTION

SECTION 02200

EARTHWORK & SITE GRADING

PART 1 - GENERAL

1.01 SCOPE

Work under this section shall include:

A. Earthwork/Site Grading:

The extent of earthwork is shown on the drawings, and includes preparation of subgrades for sidewalks, pavement subgrades, general cut/fill grading, and placement of topsoil.

1. Grade sub-soil and form to grades, contours and levels.
2. Rough grade for sidewalks.
3. Provide dust and erosion control.

1.02 RELATED WORK

A. Section 02220 – Demolition

B. Section 02315 – Excavation, Trenching, & Backfill for Utility Systems

C. Section 02370 – Soil Erosion Control

D. Section 02920 – Permanent (Perennial) Grassing & Landscaping

1.03 QUALITY ASSURANCE

A. Regulatory Requirements: Comply with applicable requirements of federal, state, and local laws, regulations and codes having jurisdiction at projectsite.

The Contractor shall secure all necessary permits and pay all applicable fees prior to commencing the work in thissection.

B. The Contractor shall comply with all pertinent provisions of the Manual of Accident Prevention in Construction issued by the Association of Contractors of America, Inc., and the Safety and Health Regulations of Construction issued by the U.S. Dept. of Labor. Refer also to Section, Special Conditions.

C. Soil tests, field density tests, and testing of footing subgrades and observation and reports of proof-rolling shall be made by a materials testing

laboratory/Geotechnical Engineer approved by the Owner and paid for by theContractor.

1.04 REFEERENCES

A. American Society for Testing and Materials (ASTM):

ASTM D1557 – Test Methods for Moisture – Density Relations of Soils and Soil-Aggregate Mixtures Using 10 lb. (4.54 kg) Rammer and 18" (45 7mm) Drop.

ASTM D698 – Test Methods for Moisture-Density Relations of Soils and Soil Aggregate Mixtures Using 5.5 lb. (2.49 kg) Rammer and 12"(304.8mm) Drop.

B. American Association of State Highway and Transportation Officials (AASHTO):

M145 – The Classification of Soils and Soil-Aggregate Mixtures for Highway Construction Purposes.

1.05 JOB CONDITIONS

A. Verify existing site conditions prior to commencing operations. Locate all existing site utilities.

1. Examine areas for conditions under which work is to be performed. Report in writing to Engineer all conditions contrary to those shown on the drawings or specified herein and all other conditions that will affect satisfactory execution of work such as improperly constructed substrates or adjoining work. Do not proceed with work until unsatisfactory conditions have been corrected.
2. Prior to starting construction, the General Contractor shall be responsible for verifying that all required permits and approvals have been obtained. No construction or fabrication of any item shall begin until the Contractor has received all plans and any other documentation from all the permitting agencies and other regulatoryauthorities.
3. Starting work constitutes acceptance of the conditions under which work is to be performed. After such acceptance the Contractor shall, at his expense, be responsible for correcting all unsatisfactory and defective work resulting from such unsatisfactory conditions.

B. Location and Protection of Utilities andStructures:

1. It shall be the responsibility of the contractor to acquaint himself with the location of all utilities and structures both present and proposed, also all existing surface structures which may be affected by work under the

Contract. The location of any underground structures furnished, shown on the drawings, or given on the site are based upon the available records but are not guaranteed to be complete or correct, and are given only to assist the Contractor in making a determination of the existence of underground structures.

2. Overhead utilities, poles, etc., shall be protected against damage by the Contractor, and if damaged by the Contractor, shall be replaced by him. The Contractor shall notify those who maintain utilities sufficiently in advance of the proposed construction so that they may locate, uncover, and disclose such work. If the progress of construction necessitates the removal or relocation of poles, overhead utilities, and obstructions, the Contractor shall make all arrangements and assume all costs of the work.

3. The Contractor shall provide for the continuance of the flow of any sewers, drains, water pipes, water courses, etc. Where such facilities, water courses, or electric overhead wires or conduits are interfered with by the work of the Contractor, the interruption shall be a minimum and shall be scheduled in advance with the utility owner.

4. Should uncharted or incorrectly charted piping or other utilities be encountered during excavation, consult utility owner immediately for directions. Cooperate with Owner and utility companies in keeping respective services and facilities in operation. Repair damaged utilities to satisfaction of utility owner.

5. Do not interrupt existing utilities serving facilities occupied and used by Owner or others, except when permitted in writing by the Utility Owner and then only after acceptable temporary utility services have been provided.

6. The Contractor shall restore all facilities interfered with to the original condition or acceptable alternate approved by the Utility Owner. The cost of such restoration of services shall be the responsibility of the Contractor.

C. Protection of Persons and Property: Barricade open excavations occurring as part of this work, post with warning lights, and take other safety precautions as necessary.

1. Operate warning lights as recommended by authorities having jurisdiction.

2. Protect structures, utilities, sidewalks, pavements, and other facilities from damage caused by settlement, lateral movement, undermining, washout and other hazards created by earthwork operations.

3. Contractor is responsible for any damage caused by his work on this project, including damage caused by his subcontractors.

4. The Contractor shall install and maintain for the duration of the project all necessary barricades and traffic control devices for the protection and safety of the public.

5. Install temporary barriers, fences, guard rails, enclosures, shoring, bracing, planking, barricades, lights, warning signs and other protections required to protect structures, utilities, landscaping, and other items that are to remain in place.

6. Protect trees, shrubs and lawns, and other features remaining as part of final landscaping.

7. Protect benchmarks and existing structure, fences, roads, underground utilities, and paving against damage from equipment and vehicular traffic.

D. Nuisances: Keep dirt, dust, noise, and other objectionable nuisances to a minimum. Use temporary enclosures, coverings and sprinkling, or combinations thereof, as necessary to limit dust to lowest practicable level, except do not use water to the extent that it causes flooding, contaminated runoff, or icing.

E. Traffic: Conduct work to ensure minimum interference with streets, driveways, sidewalks, and access to operations of on-site facilities.

1. Do not close or obstruct streets, sidewalks, drives or other public passageways without permission.

F. Erosion Control: As detailed on the drawings and as specified in Section 02370.

1. Maintain erosion and dust control throughout the duration of the contract.

PART 2 – PRODUCTS

2.01 SATISFACTORY SOIL MATERIALS

A. Contractor shall be responsible for all testing, including testing of borrow materials to determine suitability for use as fill materials.

1. **Import/Borrow Fill Materials:** Satisfactory soil materials shall be free of clay, rock, or gravel larger than 2" in any dimension, debris, waste, frozen

materials, vegetable, and other deleterious matter. Backfill and Fill Materials shall have a liquid limit less than 50%, plastic index less than 30, and a standard proctor maximum dry density (ASTM D698) greater than 90 pcf. Soils classified as SC, SP, SM, ML, or CL according to the Unified Soil Classification System are considered suitable provided they meet the above criteria. Fill materials shall be moisture-conditioned to slightly above the optimum moisture content, spread in thin lifts (8 inches), and methodically compacted to 98% of the standard proctor max dry density (ASTM D698).

B. **Topsoil** shall be considered to mean original surface soil, typical of area, which is capable of supporting native plant growth, and shall be free of large stones, roots, brush, waste construction debris, and other undesirable material or contamination.

PART 3 – EXECUTION

3.01 EARTHWORK/SITE GRADING

A. Topsoil shall be undercut to expose bearing soil level.

B. Contractor shall be responsible for hauling and removal of existing unsuitable materials.

C. Excavation: Consists of removal and disposal of material encountered when establishing required sub-grade elevations and invert elevations forutility trenches.

1. Earthwork excavation includes removal and disposal of material of any classification and other materials encountered that are not classified as unauthorized excavation or rock excavation.

2. Unauthorized excavation consists of removal of material beyond indicated subgrade elevations or dimensions without specific direction of the Engineer. Unauthorized excavation, as well as remedial work directed by the Engineer, shall be at Contractor's expense.

3. Rock excavation includes removal and disposal of materials classified as rock that are encountered when establishing required finish grades, subgrades elevations or invert elevations. Removal of materials classified as rock excavation, if encountered, will be paid for on basis of contract conditions relative to changes in work.

4. Elsewhere, backfill and compact unauthorized excavations as specified for

authorized excavations of same classification, unless otherwise directed by the Engineer.

D. Additional Excavation:

1. If unsuitable bearing materials are encountered at required subgrade elevations, contractor shall immediately notify the Engineer. Carry excavations deeper and replace excavated material as directed by the Engineer.

2. Removal of unsuitable material and its replacement as directed will be paid on basis of contract conditions relative to changes in work.

E. Stability of Excavations: Slope sides of excavations shall comply with applicable codes and ordinances having jurisdiction. Shore and brace where sloping is not possible because of space restrictions or stability of material excavated.

1. Maintain sides and slopes of excavations in safe condition until completion of backfilling.

F. Shoring and Bracing: Provide materials for shoring and bracing, such as sheet piling, uprights, stringers, and cross-braces, in good, serviceable condition.

1. Establish requirements for trench shoring and bracing to comply with applicable codes and authorities having jurisdiction.

2. Maintain shoring and bracing in excavations regardless of time period excavations will be open. Carry down shoring and bracing as excavation progresses.

G. Dewatering: Dewatering is the responsibility of the contractor. Prevent surface water and subsurface or groundwater from flowing into excavations and from flooding project site and surrounding area.

1. Do not allow water to accumulate in excavations. Remove water to prevent softening of foundation bottoms, undercutting footings, and soil changes detrimental to stability of subgrades and foundations. Provide and maintain pumps, well points, sumps, suction and discharge lines, and other dewatering system components necessary to convey water away from excavations.

2. Convey water removed from excavations and rainwater to collecting or

run-off areas. Establish and maintain temporary drainage ditches and other diversions outside excavation limits for each structure. Do not use trench excavations as temporary drainage ditches. Do not permit construction drainage onto adjacent property.

H. Material Storage: Stockpile satisfactory excavated materials where directed, for backfill or fill. Place, grade, and shape stockpiles for proper drainage. Soil stockpiles shall be surrounded with a single row of silt fence.

1. Locate and retain soil materials away from edge of excavations.

2. Dispose of excess soil material and waste materials as herein specified.

I. Excavation for Structures and Pavements: Conform to elevations and dimensions shown within a tolerance of plus or minus 0.10' and extending 10 feet from foundations to permit placing and removal of concrete formwork, installation of services, other construction, and for inspection.

1. Contractor shall grade the buildings' subgrades to allow for the required concrete slabs. Depth of subgrade below finished contours and elevations shall be as indicated in the Architectural Drawings. Refer to drawings for concrete paving subgrade depths.

J. Proof-rolling:

1. At completion of clearing, grubbing, and stripping of topsoil, stump holes or other depressions shall be cleared of loose material and debris and shall then be backfilled with approved fill as necessary to achieve specified subgrades.

2. Each building pad and all pavement subgrade areas shall be compacted and proof-rolled. All areas that are unstable under the proof-rolling equipment shall be undercut to firm soil and replaced with clean fill compacted as specified in eight-inch loose lifts. Proof-roll shall be observed by the Engineer. Contractor shall provide a report of all proof-rolling to the Engineer and Owner. Proof-rolling shall be accomplished with a fully loaded dump truck (20-ton min.) or other rubber-tired equipment. Overlapping passes of the vehicle shall be made across the site in one direction, and then at right angles to the original direction.

K. Compaction:

1. Control soil compaction during construction providing the percentage of

density specified for each area classification.

2. Compact soil to no less than the following percentages of maximum dry density for soils which exhibit a well-defined moisture density relationship determined in accordance with ASTM standards; and not less than the following percentages of relative density, determined in accordance with ASTM D 2049, for soils which will not exhibit a well-defined moisture-density relationship.

   a. Building Pads and Paved Areas: Import/borrow fill should be moisture-conditioned to slightly above the optimum moisture content, spread in relatively thin lifts (6-inch maximum loose lifts) and methodically compacted with heavy compaction equipment to at least 98 percent of the standard Proctor maximum dry density (ASTM D698). The upper one-foot of fill material should be compacted to a 99-percent compaction criterion. Additionally, the upper one foot of material in areas at-grade or cut surfaces should be scarified and compacted to the 99 percent criteria. Specifically, moisture levels should be maintained low enough to allow for satisfactory compaction to be achieved without pumping when proof-rolled. Structural fill criteria should be utilized beneath proposed and future structural areas.

   b. Unpaved Areas: Fill should be moisture-conditioned to slightly above the optimum moisture content, spread in relatively thin lifts (6-inch maximum loose lifts) and methodically compacted with heavy compaction equipment to at least 95 percent of the standard Proctor maximum dry density (ASTM D698). The upper one foot of fill material should be compacted to a 98 percent compaction criterion. Additionally, the upper one foot of material in areas at-grade or cut surfaces should be scarified and compacted to the 98 percent criteria. Specifically, moisture levels should be maintained low enough to allow for satisfactory compaction to be achieved without pumping when proof-rolled.

L. Backfill and Fill:

1. General: Place acceptable soil material in layers to required subgrade elevations, for each area classification listed below.

   a. In excavations, use satisfactory excavated or borrow material.

   b. Under grassed areas, use satisfactory excavated or borrow material.
   Under walks and pavements, use subbase material, or satisfactory excavated or borrow material, or combination of both.

2. Backfill excavations as promptly as work permits, but not until completion of the following:

   a. Removal of concrete formwork

   b. Removal of shoring and bracing, and backfilling of voids with satisfactory materials.

   c. Removal of trash and debris.

M. Ground Surface Preparation: Remove vegetation, debris, unsatisfactory soil materials, obstructions, and deleterious materials from ground surface prior to placement of fills. Plow, strip, or break-up sloped surfaces steeper than 1 vertical to 4 horizontal so that fill material will bond with existing surface.

1. When existing ground surface has a density less than the specified compaction for particular area classifications, break up ground surface, pulverize, moisture-condition to optimum moisture content, and compact to required depth and percentage of maximum density.

N. Placement and Compaction: Place backfill and materials in layers not more than 6" in loose depth for material compacted by heavy compaction equipment and not more than 4" in loose depth for material compacted by hand operated tampers.

   a. Before compaction, moisten or aerate each layer as necessary to provide optimum moisture content. Compact each layer to the required percentage of maximum dry density or relative dry density for each area classification. Do not place backfill or fill material on surfaces that are muddy, frozen, or contain frost or ice.

   b. Place backfill and fill materials adjacent to structures evenly, to the required elevations. Take care to prevent wedging action of backfill against structures by carrying material uniformly around structure to approximately same elevation in each lift.

O. Grading:

1. Uniformly grade areas within limits of grading under this section, including adjacent transition areas. Smooth finished surface within specified tolerances, compact with uniform levels or slopes between points where elevations are shown, or between such points and existing grades. Grade areas adjacent to pavement to slope as indicated on the drawings and to prevent ponding of water in paved areas. Backfill against curbs and

pavement edges flush to provide a smooth finish in areas to be grassed.

a. Establish and identify required lines, levels, contours, and datum.

b. Maintain benchmarks, monuments, and other reference points. Re-establish if disturbed or destroyed, at no cost to the Owner.

c. Before start of grading, notify all pertinent utility companies 48 hours prior to digging for location of underground utility lines. Establish the location and extent of utilities in the work areas.

d. Perform grading within contract limits, including adjacent transition areas to new elevations, levels, profiles, and contours indicated. Provide subgrade surfaces parallel to finished surface grades. Provide uniform levels and slopes between new elevations and existing grades.

e. Grade surfaces to assure areas drain away from structures and to prevent ponding and pockets of surface drainage. Provide subgrade surfaces free from irregular surface changes.

f. Perform grading within branch spread of existing trees to remain by hand methods to elevations indicated. Cut roots, if necessary, with an axe, and coat cut roots with tree paint.

g. Grade at excavations to prevent stormwater from draining into excavated areas.

2. Rough Grading:

a. Sodded areas - 4" min. below finished grade elevations.

b. Paved areas – To below base material.

c. Shrub beds - 4" min. below finished grade elevations.

d. Concrete sidewalks - 8" min. below finished grade elevations.

3. Prior to placing fill material over undisturbed subsoil, scarify the surface.

4. Proof-roll the underlying natural sub-grade layer beneath paved areas plus 5' beyond with a minimum of ten (10) passes of a heavy vibratory roller.

5. Dewatering may be required for some excavations. Dewatering shall be designed and operated to lower the ground water table to a depth of approximately 2' below the bottom of compaction surfaces. Dewatering discharges shall be directed to temporary sediment traps.

6. Grading Outside Building Lines: Grade areas adjacent to building lines to drain away from structures and to prevent ponding. Grade as per details on the Drawings.

   a. Finish surfaces free from irregular surface changes, and as follows:

      i. Lawn Areas: Finish areas to receive topsoil to within not more than 0.10' above or below required elevations. Areas shall be free of stones, pebbles, etc., 3/4" and larger. Finish grading of lawns and other areas to be grassed shall be fine graded using hand rakes and small rubber-tired tractors with box blades. Fine graded areas shall be pulverized with a Gill Pulverizer or equal equipment.

      ii. Pavements: Shape surface of areas under pavement to line, grade and cross-section, with finish surface not more than 1/2" above or below required subgrade elevation.

   b. Grading Surface of Fill Under Building Slabs: Grade smooth and even, free of voids, compacted as specified, and to required elevation. Provide final grades within a tolerance of 1/2" when tested with a 10' straightedge. Extend fill beyond perimeter of footings a minimum of 5 feet.

   c. Compaction: After grading, compact subgrade surfaces to the depth and percentage of maximum density for each areaclassification.

P. Field Quality Control:

1. It is the Contractor's responsibility to provide pre-construction laboratory testing to ensure import fill material meets the earthwork specifications. Collection of samples and delivery of samples to be the responsibility of the contractor. Testing to include at a minimum:

a. Atterberg Limits (ASTM D4318)
b. Grain Size Analysis/Soil Classification
    1) ASTM D422 / D6913 – Sieve analysis for coarse and fine aggregates
    2) ASTM D1140 – Determination of fines
c. Standard Proctor Density
    Establish the maximum dry density (MDD) and optimum moisture content (OMC) for field compaction control.
    1) ASTM D698 – Standard Proctor
    2) ASTM D1557 – Modified Proctor
d. Moisture Content (ASTM D2216)
e. Specific Gravity (ASTM D854 for fines or C127/C128 for coarse/fine aggregates)

2. In-field density to be determined via Nuclear Gauge Density test (ASTM D6938). Moisture content to be within 2% of optimum.
3. Provide proof-rolling of subgrade and GAB layers under the supervision of a licensed geotechnical engineer. Undercut pumping areas under and replace at the contractor's expense.
4. Allow Engineer to inspect and approve subgrades and fill layers before further construction work is performed. The Engineer shall observe the proof-rolling of the building pads, slab subgrade areas, and pavement areas. Submit one copy of results for all Compaction Tests and observations of proof-rolling to the Owner and Engineer.

    a. Perform field density tests in accordance with ASTM D 2937 (drive cylinder method), ASTM D 2167 (rubber balloon method), as applicable, or nuclear method ASTM D 2922.

    b. Subgrade Areas: Make at least one field density test for each horizontal layer of subgrade for every 5,000 sq. ft. of pavement subgrade area.

    c. Footings Subgrades: All footing subgrades shall be examined by the Geotechnical Engineer immediately prior to placement of reinforcing steel. Auger and penetrometer testing, augmented by hand probing, shall be performed on all footings in accordance with the following:

5. Auger and penetrometer testing: One test for each 25 linear feet of footing subgrade.

6. Probe rod testing: One test for each spread footing and one test for each 10 linear feet of continuous footing.

7. Unpaved Areas: Make at least one field density test for each horizontal layer of subgrade for every 5,000 sq. ft. of unpaved areas.

8. If in the opinion of the Engineer, based on testing reports and inspection, subgrade or fills which have been placed are below specified density, provide additional compaction and re-testing as required at no additionalexpense to the Owner.

Q. Maintenance:

1. Protection of Graded Areas: Protect newly graded areas from traffic and erosion. Keep free of trash and debris.

a. Repair and re-establish grades in settled, eroded, and rutted areas to specified tolerances.

2. Reconditioning Compacted Areas: Where completed compacted areas are disturbed by subsequent construction operations or adverse weather, scarify surface, reshape, and compact to required density prior to furtherconstruction.

R. Insufficient Fill Material: The Contractor shall be responsible for locating, testing, purchasing, hauling, spreading, and compacting all required fill material as specified herein.

S. Excess Cut Material: If the quantity of onsite excavated material is in excess of the quantities necessary to provide finish grade elevations indicated on the drawings, the excess material shall be disposed of offsite by the Contractor at no additional cost to the Owner.

3.02 FINISH GRADING

A. Prior to substantial completion of project, the Contractor shall spread topsoil (either stockpiled or hauled-on if the stockpiled topsoil is insufficient for full coverage) to the minimum depth specified over all site areas disturbed by construction activities. Additional haul-on topsoil, if required, shall be the responsibility of the Contractor to include locating, testing, purchasing, hauling, spreading, etc.

3.03 CLEAN-UP AND DISPOSAL

A. Transport trash, rubbish, and debris daily from site and legally dispose of.

1. Remove and promptly dispose of contaminated, vermin infested, or dangerous materials encountered.

2. Do not burn or bury materials on site.

B. Remove tools, equipment, and protection when work is complete and when authorized to do so by local authorities having jurisdiction and Owner.

C. The Contractor shall restore all facilities interfered with to their original condition or acceptable equivalent. The cost of such restoration or damage caused directly by his work shall be paid for by the Contractor.

END OF SECTION

SECTION 02220
DEMOLITION

PART 1 - GENERAL

1.01 SCOPE

A. The Contractor shall furnish all labor, materials, equipment, and incidentals required for demolition, removal and disposal work as shown on the Contract Drawings and as specified herein.

B. Included, but not limited to, are demolition and removals of existing materials, equipment, or work necessary to install the new work as shown on the Contract Drawings and as specified herein.

C. Demolitions and removals which may be specified under other Sections shall conform to requirements of this Section.

1.02 RELATED WORK

A. Section 02315 – Excavation, Trenching and Backfill for Utilities

1.03 SUBMITTALS

A. Schedule: Submit for approval proposed methods, equipment, and operations sequence.

1.04 JOB CONDITIONS

A. Explosives:

1. No blasting will be allowed.

PART 2 - PRODUCTS (NOT USED)

PART 3 - EXECUTION

3.01 GENERAL

A. All materials and equipment removed from existing work shall become the property of the Contractor except for those which the Owner has identified and marked for his use. All materials and equipment marked by the Owner to remain his shall be carefully removed by the Contractor so as not to be damaged, cleaned

and stored on or adjacent to the site in a protected place specified by the Engineer or delivered to a location specified by the Owner.

B. The Contractor shall dispose of all demolition materials, equipment, debris, and all other items not marked by the Owner to remain as his, off the site and in conformance with all existing applicable laws and regulations.

a. All asphalt and concrete removed for construction must be disposed of in a legally and lawfully operated C&D landfill with tickets provided to Engineer as proof of lawful disposal, or asphalt may be recycled at an asphalt plant with a letter from the asphalt plant as proof of recycling.

C. Pollution Controls:

1. Use water sprinkling, temporary enclosures, and other suitable methods to limit the amount of dust and dirt rising and scattering in the air to the lowest practical level. Comply with governing regulations pertaining to environmental protection.

a. Do not use water when it may create hazardous or objectionable conditions such as flooding, pollution, and groundwater contamination.

b. Clean adjacent structures, facilities, and improvements of dust, dirt, and debris caused by demolition operations.

D. The demolition work shall include removal to two (2) feet below proposed grades.

E. All rails from railroad removal shall become the property of the Owner and be stored on site as designated by Owner.

3.02 STRUCTURAL REMOVALS

A. The Contractor shall completely remove all structures as shown on the Contract Drawings or as specified herein unless otherwise directed by the Engineer.

B. All concrete, brick, tile, concrete block, roofing materials, reinforcement, structural or miscellaneous metals, plaster, wire mesh and other items contained in or upon the structure shall be removed and taken from the site, unless otherwise approved by the Engineer. Demolished items shall not be used in backfill.

3.03 DISCONNECTION OF UTILITY SERVICES

A. Utilities shall be disconnected at the points indicated. Where such disconnection will interrupt the utility services to an area not included in the Contract, arrangements for such interruption shall be reviewed with the Engineer at least 72 hours in advance of the interruption.

3.04 BURNING

A. The use of burning at the project site for the disposal of refuse and debris will not be permitted.

3.05 PROTECTION OF EXISTING WORK

A. Existing work to remain shall be protected from damage. Work damaged by the Contractor shall be repaired or restored to its original condition or acceptable equivalent.

3.06 EXISTING UTILITIES

A. Utility Services: Disconnections of utility services shall be coordinated so as not to affect service to other areas outside of the project limits. The owners of all utilities must be contacted prior to proceeding with work. See special project provisions for limitations on water outages.

B. Utilities: Remove or abandon all existing utilities as indicated. When utility lines are encountered, that are not indicated on the drawings, they shall be removed or abandoned to the extent that they would project into or interfere with the new construction.

3.07 DISPOSITION OF MATERIAL

A. Title to Materials: Title to all materials and equipment to be demolished, except railroad trackage, track hardware, crossties to be salvaged, concrete to be crushed, and historical items, is vested in the Contractor upon receipt of notice to proceed. The Owner will not be responsible for the condition, loss or damage to such property after notice to proceed.

B. Material for Salvage: Material that is salvageable will be removed from the project site by the Contractor.

C. Unsalvageable Materials: Masonry and other noncombustible materials, other than concrete permitted to remain in place and concrete to be stockpiled and crushed, shall be disposed of by the Contractor off the property. Other materials

such as non-useable cross-ties, lumber, etc. shall be removed from the site by the Contractor.

3.08 HISTORICAL ITEMS

A. There are no known historical items on the project site; however, if historical items are discovered, remove historical items in a manner to prevent damage.

B. Turn over historical items, if found, to the Owner for disposition such as:

1. Corner Stones
2. Content of Corner Stones
3. Document Boxes wherever located on the site.
4. Belgian Block

3.09 CLEAN-UP

A. Contractor shall remove from the site all debris resulting from the demolition operations as it accumulates. Upon completion of the work, all materials, equipment, waste and debris of every sort shall be removed and the premises shall be left clean, neat and orderly.

B. All materials and debris resulting from demolition and removal operations shall be disposed of off-site in an authorized, permitted disposal site.

a. All asphalt and concrete removed for construction must be disposed of in a legally and lawfully operated C&D landfill with tickets provided to Engineer as proof of lawful disposal, or asphalt may be recycled at an asphalt plant with a letter from the asphalt plant as proof of recycling.

END OF SECTION

SECTION 02315
EXCAVATION, TRENCHING AND BACKFILL FOR UTILITY SYSTEMS

PART 1 – GENERAL

1.01 SCOPE

A. Furnish all labor, materials, equipment and incidentals necessary to perform all excavation, trenching and back fill required to complete the work shown on the Drawings and specified herein. The work shall include, but is not limited to; excavation for manholes, vaults, electrical manholes, hand holes, conduits, cables, raceways and ducts and pipes; all backfilling, embankment and grading; disposal of waste and surplus materials; and all related work such as sheeting, bracing and dewatering.

B. Obtain materials required for backfill, fill, or embankments in excess of that available on the site from other sources. Include all costs of obtaining off-site materials in the contract price.

1.02 RELATED WORK

N/A

1.03 REFERENCES

A. American Society for Testing and Materials.

1.04 TESTING SERVICES

A. General: The Contractor shall select a qualified independent testing laboratory for the purpose of identifying soils, checking densities, and classifying soils materials during construction. All testing will be paid for by the Contractor. **Copies of all test results shall be furnished to the Engineer.**

B. All materials to be used in the work shall be tested prior to the use to show conformance with the requirements of these specifications. Materials being used in the work, which have been tested previously, may be subjected to further tests from time to time and may be rejected if found defective. Rejected materials shall be removed from the project immediately, notwithstanding the results of former tests to which they have been subjected.

C. Moisture-Density Tests: Testing shall be in accordance with ASTM Methods D698

and D1557. A test shall be performed on each type of material used in the work regardless of source. Tests will be accompanied by particle-size analyses of the soils tested (ASTM Methods D421 and D422). Changes in color, gradation, plasticity or source of fill material will require the performance of additional tests. Copies of all test results shall be furnished to the Engineer.

D. Field Density Tests: Tests shall be made in accordance with ASTM Method D1556. Tests shall be made in accordance with the following minimum schedule or as required by the soils technician or as may be directed by the Engineer:

1. In proposed street and road right-of-way, parking areas, yards, & other traveled areas, one test per 100 linear feet of trench for each 4’ of depth.

2. Under buildings and structures, each lift of backfill shall be tested from undercut level up to slab support level for each 50 linear feet of trench.

3. In unpaved areas, woodland, fields, pastures, areas not open to vehicular traffic, & areas where no structures are proposed, one test per 500 linear feet of trench for each 4’ of depth.

E. Submittals

1. The soils technicians will submit formal reports of all compaction tests and retests. The reports are to be furnished to the Owner and the Engineer as soon as possible upon completion of the required tests.

2. This report information is to include but not be limited to the following:

   a. Date of the test and date submitted.
   b. Location of test.
   c. Wet weight, moisture content and dry weight of field sample.
   d. Description of soil.
   e. Maximum dry density and moisture content of the lab sample which best matches the field sample in color, texture, grain size and maximum dry density.
   f. Ratio of field dry density to maximum lab dry density expressed as a percentage.
   g. Comments concerning the field density passing or failing the specified compaction.
   h. Comments about recompaction if required.

F. Compaction Results

1. If any compaction tests reveal that fill or backfill is not compacted as

specified, the Contractor shall scarify and recompact as required to achieve the specified density. Additional compaction tests shall be made to verify proper compaction. These additional tests, required due to failure of the original test shall be paid for by the Contractor without reimbursement by the Owner.

2. The soils technician is to advise the Engineer and the Contractor's Superintendent immediately of any compaction tests failing to meet the specified minimum requirements. No additional lift is to be placed on a lift with any portion failing.

1.05 PROTECTION

A. Sheeting and Bracing

1. Furnish, put in place, and maintain such sheeting and bracing as may be required to support the sides of excavations, to prevent any movement which could in any way diminish the ridge of the excavation below that necessary for proper construction, and to protect adjacent structures from undermining or other damage. If the Engineer is of the opinion that at any points sufficient or proper supports have not been provided, he may order additional supports put in at the expense of the Contractor, and compliance with such order shall not relieve or release the Contractor from his responsibility for the sufficiency of such supports. Care shall be taken to prevent voids outside of the sheeting, but if voids are formed, they shall be immediately filled and rammed. Where soil cannot be properly compacted to fill a void, lean concrete shall be used as backfill at no additional expense to the Owner. Sheeting and Bracing requirements are further defined in OSHA Standards, Subpart P, Part 1926 of the Code of Federal Regulations.

2. The Contractor shall construct the sheeting outside the neat lines of the foundation unless indicated otherwise to the extent he deems it desirable for his method of operation. Sheeting shall be plumb and securely braced and tied in position. Sheeting and bracing shall be adequate to withstand all pressures to which the trench will be subjected. Any movement or bulging which may occur shall be corrected by the Contractor at his own expense so as to provide the necessary clearances and dimensions.

3. Where sheeting and bracing is required to support the sides of excavations, the Contractor shall engage a Professional Engineer, registered in the State of Georgia, to design the sheeting and bracing. The sheeting and bracing installed shall be in conformity with the design, and certification of this shall be provided by the Professional Engineer.

4. The Contractor shall leave in place to be embedded in the backfill all sheeting and bracing not shown on the Drawings but which the Engineer may direct him in writing to leave in place at any time during the progress of the work for the purpose of preventing injury to structures, utilities, or property, whether public or private. The Engineer may direct that timber used for sheeting and bracing be cut off at any specified elevation. The contractor will be paid for such sheeting directed by the Engineer to be left in place in accordance with the General Conditions. All timber sheeting to be left in place shall be treated.

5. All sheeting and bracing not left in place shall be carefully removed in such manner as not to disturb utilities, or property. All voids left or caused by withdrawal of sheeting shall be immediately refilled with sand by ramming with tools especially adapted to that purpose, or otherwise as acceptable to Engineer and Owner.

6. The right of the Engineer to order sheeting and bracing left in place shall not be construed as creating any obligation on his part to issue such orders, and his failure to exercise his right to do so shall not relieve the Contractor from liability for damages to persons or property occurring from or upon the work on the part of the Contractor to leave in place sufficient sheeting and bracing to prevent any caving or moving of the ground.

7. No sheeting is to be withdrawn if driven below mid-diameter of any pipe, and under no circumstances shall any sheeting be cut off at a level lower than 1 ft above the top of any pipe. The cost of said sheeting shall be part of the base bid.

B. Dewatering and Drainage

1. The Contractor shall at all times during construction provide and maintain proper equipment and facilities to remove all water entering excavations, and shall keep such excavations dry so as to obtain a satisfactory undisturbed subgrade foundation condition until the fills, structures or pipes to be built thereon have been completed to such extent that they will not be floated or otherwise damaged by allowing water levels to return to natural levels. The Contractor shall engage a Geotechnical Engineer, Registered in the State of Georgia where required, to design the dewatering system. The Contractor shall submit to the Engineer for review the design of the dewatering systems prior to commencing work.

2. The Contractor shall furnish, install, maintain, operate and remove a

temporary dewatering system consisting of trenches, sump pits, deep wells, well points, or other methods as required to lower and control the groundwater level so that the pipes may be installed in the dry. The Contractor shall assume full responsibility for the design and installation of an adequate dewatering system. The Contractor shall, at his own expense, correct all damage resulting from inadequacy of the dewatering system or from flooding of the construction site from other causes.

3. The Contractor shall maintain the water level below the excavated area for the various phases of the work continuously and shall make such provisions as may be necessary to avoid interruptions due to weather, labor strikes, power failures, or other delays. He shall provide and have ready for immediate use at all times diesel or gasoline powered standby pumping units to serve the system in case of failure of the normal pumping units.

4. Piping and boiling, or any form of uncontrolled seepage, in the bottom or sides of the excavation shall be prevented at all times. If for any reason the dewatering system is found to be inadequate to meet the requirements set forth herein, the Contractor shall at his own expense make such additions, changes and/or replacements as necessary to provide a satisfactory dewatering system.

5. Dewatering shall at all times be conducted in such a manner as to preserve the undisturbed bearing capacity of the subgrade soils at proposed bottom of excavation. Well or sump installations shall be constructed with proper sand filters to prevent drawing of finer grained soil from the surrounding ground.

6. Water entering the excavation form surface runoff shall be collected in shallow ditches around the perimeter of the excavation, drained to sumps, and pumped from the excavation to maintain a bottom free from standing water.

7. The Contractor shall take all additional precautions to prevent uplift during construction. The Contractor shall maintain the groundwater level below the pipe so flotation is prevented.

8. Drainage water shall be disposed of through a desilting basin which will prevent the discharge of sediment into any surface waters or existing drains, and to prevent flow or seepage back into the excavated area.

9. Flotation shall be prevented by the Contractor by maintaining a positive and continuous operation of the dewatering system. The Contractor shall

be fully responsible and liable for all damages which may result from failure of this system.

10. Removal of dewatering equipment shall be required; the material and equipment constituting the system, shall be removed by the Contractor.

11. The Contractor shall take all necessary precautions to preclude the accidental discharge of fuel, oil, etc. in order to prevent adverse effects on groundwater quality.

C. Culverts and Ditches

1. Protect drainage culverts from damage. If damaged, restore to satisfactory condition at no cost to the Owner.

2. If it is necessary to remove a culvert, do not replace until the proposed pipeline is installed and trench backfilled and compacted to the subgrade of the culvert. Replace culverts to the line and grade established by the Owner.

3. Backfill minor drainage ditches so that the upper one foot of material between ditch banks is topsoil, loam, or clay.

4. Compact this material for the full ditch width to a minimum of 95% of maximum density as determined by ASTM D 1557.

5. Ditches steeper than 2:1 slope shall be protected and reinforced with a synthetic fiber or grid material. Contractor has the option not to use reinforcement for slopes 2:1 or flatter. Correct any ditch erosion occurring as a result of pipeline construction at no cost to the Owner.

D. Water, Gas, Telephone, Power, Cable

1. Protect all other utilities from damage. Notify utility owner prior to start of excavation as directed in sub-paragraph 3-5-2 of the General Conditions. If, during the work the utility is damaged, notify the utility company and the Owner immediately. Do not attempt to repair or replace damaged utilities unless so directed by the utility company and approved by the Engineer. Payment for restoration of damaged utilities shall be the Contractor's responsibility. Call before you dig – Utilities Protection Center 1-800-282-7411.

1.06 JOB CONDITIONS

A. Soils

1. The contractor shall examine the site or undertake his own soil borings prior to submitting his bid, taking into consideration all conditions that may affect his work. The Owner and Engineer will not assume responsibility for subsoil quality or conditions. The Contractor shall accept the site in its existing condition, and shall assume the risk of encountering whatever materials as may occur. The Contractor shall make his own determination of the soil structure and site conditions as it may affect the work.

B. Existing Utilities

1. Locate existing underground utilities in the areas of work. If utilities are to remain in place, provide adequate means of protection during earthwork operations.

2. Should uncharted, or incorrectly charted, piping appear in the excavation, consult the Engineer and the Owner of such piping or utility immediately for directions.

3. Cooperate with Owner and utility companies in keeping respective services and facilities in operation. Repair damaged utilities to satisfaction of utility owner.

4. Demolish and completely remove from site existing underground utilities indicated on the Drawings to be removed.

C. Protection of Persons and Property

1. Barricade open excavations occurring as part of this work and post with warning lights. Operate warning lights as recommended by authorities having jurisdiction.

2. Protect structures, utilities, sidewalks, pavements, and other facilities from damage caused by settlement, lateral movement, undermining, washout and other hazards created by earthwork operations.

1.07 SUBMITTALS

A. Submit to the Engineer for review in accordance with Section 01300 the proposed methods of construction, including dewatering, excavation, filling, compaction, and backfilling for the various portions of the work. Review shall be for method only. The Contractor shall remain responsible for the adequacy and safety of the methods.

B. Submit to the Engineer for review in accordance with Section 01300 representative samples of each type of proposed fill material weighing approximately 50 lbs at least 15 days prior to the date of anticipated use of such material.

PART 2 – PRODUCTS

2.02 MATERIALS

A. Backfill materials shall be natural or processed mineral soils, blasted and crushed rock, or masonry rubble. Fill materials shall be free of all organic material, trash, snow, ice, frozen soil or other objectionable materials. Clay soils having a natural in-place water content in excess of 30 percent are considered unsuitable for stockpiling and/or future use. Fill materials to be used have been classified under categories specified below.

B. Embedment materials listed here include a number of processed materials plus the soil types defined by the USCS Soil Classification Systems in ASTM D2487. These materials are grouped into categories according to their suitability for this application:

1. Class I: Angular crushed stone or rock (1/4 to 1-1/2 inches), crushed gravel, crushed slag; large voids with little or no fines.

2. Class II: Coarse sands and gravels with maximum particle size of 40 mm (1-1/2 inches), including variously graded sands and gravels containing small percentages of fines, generally granular and non-cohesive, either wet or dry. Soil types GW, GP, SW and SP are included in this class.

3. Class III: Fine sand and clayey gravels, including fine sands, sand-clay mixtures, and gravel-clay mixtures. Soil types GM, GC, SM and SC are included in this class.

4. Class IV: Silt, silty clays and clays including inorganic clays and silts of medium to high plasticity and liquid limits. Soil types MH, CH and CL are included in this class. These materials are not to be used for bedding, haunching or initial backfill.

5. Class V: This class includes the organic soils OL, OH and PT as well as soils containing frozen earth, debris, rocks larger than 40 mm (1-1/2 inches) in diameter, and other foreign materials. These materials shall not be used for bedding, haunching and initial backfill.

C. Granular Fill, shall be sound, hard, durable crushed stone meeting the following gradation requirements and shall conform to ASTM C33, Size No. 57.

Sieve Size	Percent Passing by Weight
1-1/2-in	100
1-in	90-100
1/2-in	26-60
No. 4	0-7
No. 8	0-3

D. Sand shall conform to ASTM Standard C33 for concrete sand.

PART 3 – EXECUTION

3.01 EXCAVATION

A. The Contractor shall proceed with caution in the excavation and preparation of the trench so that the exact location of underground structures in the trench zone may be determined before being damaged. He shall be held responsible for the repair or replacement of such structures when broken or otherwise damaged because of his operations.

B. The Contractor shall make explorations and excavations at no additional charge to the Owner to determine the location of existing underground structures.

C. Utilities and other piping shall be laid in open trenches as shown and specified. Trenches shall be excavated to the designated lines and grades, beginning at the outlet end and progressing toward the upper end in each case. Trenches for pipe shall be shaped to the lower 1/3 of the pipe and provide uniform and continuous bearing. Bell holes shall be dug to allow ample room for working fully around each joint.

D. Trenches shall be of minimum width to provide ample working space for making joints and shall be not less than 16 inches greater than the outer diameter of the pipe or more than 18 inches greater than the outer diameter of the pipe. Sides of trenches shall be closely vertical to top of pipe and shall be sheet piled and braced where soil is unstable nature. Above the top of the pipe, trenches may be sloped. The ridge of the trench above this level may be wider for sheeting and bracing and the performance of the work.

E. Trenches shall be excavated on the alignments shown on the Plans, and to the depth and grade necessary to accommodate the pipes at the elevations shown.

Where elevations of the invert or centerline of a pipe are shown at the ends of a pipe, the pipe shall be installed at a continuous grade between the two elevations.

F. Excavation in excess of the depth required for proper shaping shall be corrected by bringing to grade the invert of the ditch with compacted coarse, granular material at no additional expense to the Owner. Bell holes shall be excavated to relieve bell of all load, but small enough to insure that support is provided throughout the length of the pipe barrel.

G. Excavation in excess of the depths required for manholes and other structures shall be corrected by placing a subfoundation of 1500 psi concrete, at no additional expense of the Owner.

H. If trenches are excavated to widths in excess of those specified, or if the trench walls collapse, the pipe shall be laid in accordance with the next better class of bedding at the expense of the Contractor.

3.02 TRENCHES

A. Trenches shall be maintained in a safe condition to prevent hazardous conditions to persons working in or around the trench.

B. Braced and sheeted trenches and open trenches shall comply with all State and Federal Laws and Regulations, and local ordinances relating to safety, life, health and property.

C. The top portion of the trench may be excavated with sloping or vertical sides to any width which will not cause damage to adjoining structures, roadways, utilities, etc. The bottom of the trenches shall be graded to provide uniform bearing and support each section of the pipe on undisturbed soil every point along its entire length, except for the portions of the pipe sections excavated for bell holes and for the sealing of pipe joints. Bell holes and depressions for joints shall be dug after the trench bottom has been graded and in order that the pipe rests upon the trench bottom for its full length and shall be only of such length, depth and width for making the particular type of joints. The bottom of the trench shall be rounded so that at least the bottom one-third of the pipe shall rest on undisturbed earth for the full length of the barrel as jointing operations will permit. This part of the excavation shall be done manually only a few feet in advance of the pipe laying by workmen skilled in this type of work.

D. The sides of all trenches and excavation for structures shall be held by stay bracing, or by skeleton or solid sheeting and bracing according to conditions encountered, to protect the excavation, adjoining property and for the safety of personnel. Bracing and shoring may be removed then the level of the backfilling has reached

the elevation to protect the pipe work an adjacent property. When sheeting or shoring above this level cannot be safely removed, it may be left in place. Timber left in place shall be cut off at least 2 feet below the surface.

3.03 PILING EXCAVATED MATERIALS

A. All excavated material shall be piled in a manner that will not endanger the work and that will avoid obstructing roadways.

3.04 LIMIT TO LENGTH OF OPEN TRENCH

B. Pipe trenches shall not be excavated more than 400 feet in advance of pipe laying and all work shall be performed to cause the least possible inconvenience to the public. Adequate temporary bridges or crossings shall be constructed and maintained where required to permit uninterrupted vehicular and pedestrian traffic.

3.05 REMOVAL OF UNSUITABLE MATERIAL

A. Should overdepth excavation be necessary to remove unsuitable material and to replace with satisfactory material, the Contractor will be paid a negotiated amount for this work based on the following requirements:

1. When the trench is excavated to the plan depth or as required by these Specifications, and soft or other material not suitable for bedding purposes is encountered in the trench, the Contractor shall immediately notify the Engineer for inspection and measurement of the unsuitable material to be removed.

2. No overdepth excavation or backfilling of the overdepth excavated trench shall start until proper measurements of the trench have been taken by the Engineer for the determination of the quantity in cubic yards of unsuitable material excavated. Backfill material and backfilling shall conform to the requirements specified in 3.08 below.

3. No payment will be made for any overdepth excavation of soft unstable material due to the failure of the Contractor to provide adequate means to keep the trench dry.

4. No payment will be made for any overdepth excavation of the unsuitable material and replacement not inspected and measured by the Engineer prior to excavation.

1.06 PIPE BEDDING

A. **Bedding for all types of pipe shall be in accordance with the bedding detail provided in the Plans.**

B. Bedding of Ductile Iron Pipe

1. Pipe shall be laid on foundations prepared in accordance with ANSI/AWWA C600 as modified herein, and in accordance with the various classes of bedding required by the trench width and trench depth for the size of pipe to be laid. Typical bedding shall be included in the appropriate unit price bid for ductile iron pipe.

C. Bedding of PVC Pipe

1. Pipe shall be bedded true to line and grade with uniform and continuous support from a firm base in accordance with ASTM D2321 as modified herein.

D. Bell Holes: Bell holes shall be provided in all classes of bedding to relieve pipe bells of all load, but small enough to insure that support is provided throughout the length of the pipe barrel.

E. Bedding material shall be placed on a flat bottom trench and thoroughly compacted by tamping or slicing with a flat blade shovel. Compacted bedding material shall be extended up the sides of the pipe to the heights shown in the bedding detail in the Plans.

F. Overwidth Excavation: If trenches are excavated to widths in excess of those specified below, or if trench walls collapse, pipe shall be laid in accordance with the requirements for at least the next better class of bedding at the expense of the Contractor.

G. Pipe shall be bedded true to line and grade with uniform and continuous support from a firm base in accordance with ASTM D2321 as modified herein. Blocking shall not be used to bring the pipe to grade. Typical bedding material shall be included in the unit price for plastic and FRP pipes.

H. Compaction of foundation, bedding, haunching and initial backfill shall extend to the trench wall.

I. Bedding material in the area around the pipe shall be installed with care. Care shall be used to insure that sufficient material has been worked under the haunch of the pipe to provide adequate side support. Precautions must be taken to prevent movement of the pipe during placing of the material through the pipe

haunch. See bedding detail in plans for further detail.

J. Avoid contact between the pipe and compaction equipment. Compaction of haunching, initial backfill and backfill material shall be done in such a way so that compaction equipment will not have a damaging effect on the pipe.

K. The trench depth shall be as shown on the plans or as required to provide the depth of cover as specified by the purchaser.

3.08 BACKFILLING

A. Backfilling consists of placing suitable materials removed during the excavation into the excavated areas, placing embedment materials and compacting the same to a density equal to or greater than what exists before excavation or as specified herein.

B. Borrow Backfill: Borrow backfill will be required if there is not sufficient suitable material available from other parts of the work to backfill the trenches. Borrow backfill from approved borrow pits shall be used. Only those soils in the borrow pits that meet the specified requirements for suitable material shall be used.

C. All backfill material shall be free of stones, concrete and clay lumps larger than 1/3 cubic foot. Roots, stumps and rubbish which will decompose will not be permitted in the backfill. Backfill material shall have its moisture content corrected, as may be necessary before being placed in the trench to bring the moisture content to approximately "optimum" for good compaction. Any rock, stone, concrete, clay lumps larger than 1/3 cubic foot in volume, rubbish and debris shall be removed from the site and disposed of by the Contractor in a lawful manner.

D. The existing sanitary sewer pipe is 18" clay and shall be removed and disposed of properly or may be "demolished in place" by removing pipe pieces larger than 6" in diameter. For "demolish in place", clay pipe pieces smaller than 6" in diameter may be mixed in with specified backfill material. Existing pipe at creek crossing is ductile iron and shall be removed and disposed of by contractor. Existing manholes shall be removed and disposed of by contractor.

E. Select Backfill: Select backfill material shall be placed below, around each side, and over the top of the pipe in approximately horizontal layers not exceeding 8-inches in thickness to a minimum height of 6-inches above the pipe crown or greater as detailed herein and on the Drawings. This initial backfill shall be placed immediately after the pipes are laid and joints have been observed by the Engineer to anchor and protect the pipe from damage by subsequent backfill and ensure the uniform distribution of the loads over the top of the pipe. Select Material shall be Class I. The Contractor shall backfill both sides of the pipe

simultaneously to prevent side pressures and each layer shall be compacted thoroughly with mechanical tamping equipment in such manner as not to damage the pipe, pipe joints or shift the pipe alignment. Workmen shall not be permitted to walk over the pipe until at least 12 inches of compacted fill has been placed over the pipe. The Contractor shall not use water to obtain compaction except for adding water to the backfill material before placing in the trench to bring the moisture content to approximately "optimum" for good compaction.

F. General Backfilling: After initial, select backfill material has been placed and tamped, the remainder of the trench may be backfilled with general excavated material, except that no rock, unless in small shattered fragments, will be permitted to be mixed with other backfill material.

1. Backfilling under buildings, and structures: Backfilling a pipe trench under structures and buildings consists of placing structural fill in the trench in 4 inch maximum loose lifts (if hand tamped) and 6” maximum loose lifts (if machine tamped) and compacting an area from the undercut level to the slab support level to 100% of the modified Proctor maximum dry density (ASTM D 1557). No water shall be used to secure compaction except for adding water to the backfill material before placing in the trench to bring moisture content approximately "optimum" for good compaction. Each loose lift shall be tamped before additional backfill material is placed in the excavated area.

2. Street and Road Right – of – Way, Parking Areas, Yards and Other Traveled Areas: Backfill shall consist of placing structural fill in the trench in uniform layers not exceeding six inches (6”) in thickness, with each layer thoroughly compacted to 95% of the modified Proctor maximum dry density (ASTM D 1557) with heavy duty mechanical tampers (“Whacker” or equal).

G. In other areas, including woodlands, fields, pastures, areas not open to vehicular travel, and areas where no structures are proposed or anticipated in the future, the remainder of the ditch may be backfilled by placing fill in ditch and “walking-in” with wheel loaded equipment. Backfill material may be windrowed and maintained in a suitable manner so as to concentrate and pond rainfall runoff over the trench. After sufficient settlement has been obtained, the Contractor shall complete surface dressing, remove surplus material and clean up in accordance with these Specifications. Wherever trenches have not been properly filled, or if settlement occurs, they shall be refilled, smoothed off and finally made to conform to the surface of the ground. Backfilling shall be carefully performed and the original surface restored as specified herein. Compaction in these areas shall not be less than 90% of the modified Proctor maximum dry density. Surplus material shall be disposed of by the Contractor.

3.09 PROTECTION OF WATER SUPPLY PIPES

A. Horizontal Separation: Sewers and force mains shall be laid at least 10 feet horizontally from any existing or proposed watermain. The distance shall be measured edge to edge. In cases where it is not practical to maintain a 10 foot separation, such deviation may allow installation of the sewer or force main closer to the watermain, provided that the watermain is in a separate trench or on a undisturbed earth shelf located on the side of the sewer or force main and at an elevation so the bottom of the watermain is at least 18 inches above the top of the sewer or force main.

B. Crossings: Sewers and force mains crossing water mains shall be laid to provide a minimum vertical distance of 18 inches between the outside of the watermain an the outside of the sewer or force main. This shall be the case where the watermain is either above or below the sewer or force main. The crossing shall be arranged so that the sewer or force main joints will be equidistant and as far as possible from the watermain joints. Where a watermain crosses under a sewer or force main, adequate structural support shall be provided for the sewer or force main to prevent damage to the watermain.

C. Special Conditions: When it is impossible to obtain proper horizontal and vertical separation as stipulated above, the sewer or force main shall be designed and constructed equal to water pipe, and shall be pressure tested to assure water tightness prior to backfilling.

3.10 UTILITY CONSTRUCTION IN OTHER EXCAVATION

A. Where utilities are required to be constructed in areas also requiring excavation and backfill for other work, coordinate the work so that the parts come together properly and the construction of the various parts can be done without damage to other parts. Place bedding which will form bearing for pipes, using suitable material and shaping to the lower 1/3 of the pipe to provide uniform and continuous bearing. Compaction of backfill material which will form bearing shall be equal to that specified hereinbefore under "Backfilling under buildings and structures". After the pipe or other utility is placed, backfilling shall proceed as specified hereinbefore following the requirements specified under Section 3.08 as applicable.

END OF SECTION

SECTION 02316

ROCK REMOVAL

PART 1 GENERAL

1.01 SCOPE OF WORK

Payment to be limited to trench width – no rock outside standard trench width to be paid for

A. Removal of all rock materials discovered during excavation for the purpose of construction. Removal shall include drilling and/or blasting incidental thereto and disposal of excavated materials.

B. When necessary for prosecution of the Work, the use of explosives to assist rock removal may be exercised by Contractor provided this use is in compliance with all local, State, Federal and other Governmental regulations applying to transportation, storage, use and control of explosives.

1.02 PROPOSAL UNIT PRICING

A. A base quantity and stipulated cost are included in the bid form under the line item “Rock Removal – Base Cost”. A separate line item “Rock Removal - Premium Cost” is included in the bid form and can be utilized if the Contractor’s bid for “Rock Removal” is greater than the stipulated cost. If this is the case, the Contractor will specify the additional amount over the stipulated cost as the unit price for “Rock Removal Premium” on bid form.

1.03 RELATED WORK

A. Section 02315 – Excavation, Trenching and Backfill for Utility Systems

1.04 REFERENCES

A. NFPA 495 – Code for the manufacture, Transportation, Storage, and Use of Explosive Materials.

B. OSHA 2207 – Construction Industry Standards, Subpart T – Demolition.

1.05 QUALITY ASSURANCE

A. Explosives Firm – Company specializing in explosives for disintegration of subsurface rock with documented experience.

1.06 REGULATORY REQUIREMENTS

A. Conform to applicable code for explosive disintegration of rock.

B. Obtain permits from authorities having jurisdiction before explosives are brought to site or drilling is started.

C. All explosives shall be stored securely in compliance with all laws and ordinances, and all such storage places shall be clearly marked DANGEROUS EXPLOSIVES. Blasting caps, electric blasting caps, detonating primers, and primed cartridges shall not be stored in the same magazine with other explosives or blasting agents. Locked storage shall be provided satisfactory to the Engineer, never closer than 1,000 feet from any road, building, or camping area.

PART 2 – PRODUCTS

2.01 MATERIALS

A. Rock (Definition) – Solid mineral material with a volume in excess of ½ cubic yard that cannot be broken down and/or removed by use of heavy construction equipment, such as: an excavator having a bucket curling force rated at not less than 18,300 pounds (Caterpillar 215 or equivalent), bulldozer such as a Caterpillar D8K equipped with single tooth hydraulic ripper, hydraulic hammer, ¾ cubic yard capacity power shovel, rooters, etc., and without drilling or blasting. Materials which can be loosened with a pick, hard pan, boulders less than ½ cubic yard in volume, chert, clay, soft shale, soft and disintegrated rock and any similar material shall not be considered as rock. (All such materials to be considered unclassified or common excavation).

B. Explosives – Shall be suitable for intended purposes at the Contractor's option subject to review by Owner and Engineer.

C. Delay Devices – Type recommended by explosives firm to be used as accessory to explosives. Subject to review by Engineer.

D. Blasting Mat – When the use of explosives is necessitated during prosecution of the Work, Contractor shall incorporate the use of blasting mats or type recommended by explosives firm to lessen the danger of projectiles occasionally resultant from blasting of rock.

PART 3 EXECUTION

3.01 INSPECTION

A. Conduct survey and document conditions of buildings near locations of rock removal, prior to blasting, and photograph existing conditions identifying existing irregularities.

B. Advise owners of adjacent buildings or structures, in writing, prior to executing seismographic survey. Explain planned blasting and seismic operations.

C. Contractor shall obtain seismic survey prior to rock excavation to determine maximum charges that can be used at different locations in area of excavation without damaging adjacent properties or other work.

D. Contractor shall verify site conditions and note irregularities affecting work of this Section prior to performing any operations involving explosives. Contractor shall submit to Owner, for review, a detailed plan for using explosives to include, but not limited to:

1. Sequence of Work

2. Equipment

3. Protection to be provided for existing structures to remain

4. Personnel

    a. Training

    b. Previous experience with the use of explosives in similar situation

E. Beginning work of this Section means acceptance of existing condition.

F. Rock in utility trenches shall be excavated over the horizontal limits of excavation and to depths as follows:

Size of Pipeline (Inches)	Depth of Excavation Below Bottom of Pipe (Inches)
Less than 4	6
4 to 6	8
Over 8	12

Space below grade for pipe shall then be backfilled with minus ¾-inch crushed rock or gravel or other approved materials and tamped to proper grade.

3.02 ROCK REMOVAL – MECHANICAL METHOD

A. Excavate for and remove rock by the mechanical method.

B. Where pipes are constructed on concrete cradles, rock shall be excavated to bottom of cradle as shown on plans.

C. Where rock foundation is obtained at grade for over 50 percent of area of any one structure, the portion of foundation that is not rock shall be excavated below grade to reach a satisfactory foundation of rock. The portion below grade shall be backfilled with Class C concrete.

D. Where rock foundation is obtained at grade for less than fifty (50%) of any one structure and satisfactory rock cannot be found over the remaining area by reasonable additional excavation, the rock shall be removed for a depth of twelve (12) inches below grade and the space below grade shall be backfilled with brushed stone as specified for pipelines.

E. Rock excavation near existing pipelines or other structures shall be conducted with utmost care to avoid damage. Injury or damage to other structures and properties shall be promptly repaired to the satisfaction of owner and by Contractor at his own expense.

F. Rock excavation for all structures and adjacent trenches under this contract and any other rock excavation directed by Owner shall be completed before construction of any structure is started in the vicinity.

G. Do not use excavated rock as backfill material. Remove excavated material from site, which is not suitable for use as rip rap.

H. Contractor shall correct unauthorized rock removal by backfill to grade with Class C concrete in accordance with backfilling and compaction requirements of Section 02315 at his own expense.

3.03 ROCK REMOVAL – EXPLOSIVES METHODS

A. If rock is uncovered requiring the explosives method for rock disintegration and removal, the Engineer shall be notified immediately so that the surface can be examined. Blasting will not be permitted unless written authorization is given by Engineer. (All materials removed shall be considered common excavation).

B. The Contractor shall notify any owners of adjacent buildings or structures, and any public utility owners having structures or other installations above or below ground, in writing prior to use of explosives. Such notice shall be given sufficiently in advance so that they may take such steps as they may deem necessary to

protect their property from injury and/or damage.

C. Rock excavation by use of explosives shall be conducted with due regard for safety of persons and property in the vicinity and in strict conformance with requirements of local, State and Federal ordinance, laws and regulations governing the use of explosives.

D. Blasting shall be conducted so as not to endanger persons or property, and whenever required, the blast shall be covered with mats or otherwise satisfactorily confined. The contractor shall be held responsible for and shall make good any damage caused by blasting or accidental explosions.

E. The Contractor shall permit only authorized and qualified persons to handle and use explosives.

F. Smoking, firearms, matches, open flame lamps, and other fires, flame or heat producing devices and sparks shall be prohibited in or near explosive magazines or while explosives are being handled, transported or used.

G. No person shall be allowed to handle or use explosives while under the influence of intoxicating liquors, narcotics, or other dangerous drugs.

H. All explosives shall be accounted for at all times. Explosives not being used shall e kept in a locked magazine, unavailable to persons not authorized to handle them. The Contractor shall maintain an inventory and use record of all explosives. Appropriate authorities shall be notified of any loss, theft, or unauthorized entry into a magazine.

I. No explosives or blasting agents shall be abandoned.

J. Contractor’s employees authorized to prepare explosive charges or conduct blasting operations shall use every reasonable precaution including, but not limited to, visual and audible warning signals. Flags, or barricades, to ensure safety.

K. It shall be contractor’s responsibility to incorporate the use of seismic monitoring should rock excavation, by use of explosives, occur within 150 feet of any residential structure and within 300 feet of any miscellaneous structure. Blasting conducted near dams or bridge foundations shall incorporate the use of a seismic monitor should such blasting occur within 25 feet of said dam and/or bridge foundation. Contractor shall maintain all seismic records and blasting logs to be furnished to Engineer upon request.

L. Disintegrate rock and remove from excavation.

M. Cut away rock at excavation bottom for form level bearing.

N. Remove shaled layers to provide sound and unshattered base for pipe foundations.

O. Do not use excavated rock as backfill material. Remove excavated material from site, which is not suitable for use as rip rap.

P. Correct unauthorized rock removal or overbreak in accordance with backfilling and compaction requirements at his own expense.

3.04 FIELD QUALITY CONTROL

A. Provide for visual inspection of bearing surfaces and cavities formed by removed rock for inspection by Engineer or his representative prior to laying of pipe.

END OF SECTION

SECTION 02370
SOIL EROSION AND SEDIMENT CONTROL

PART 1 – GENERAL

1.01 SECTION INCLUDES

A. Temporary erosion and sediment control measures shall be employed during the construction period and shall include all measures required to prevent soil erosion at the site until permanent erosion control measures are installed. Work shall be accomplished through the use of vegetative measures, such as mulching and grassing, and structural practices including, construction exits, sediment barriers, check dams, inlet sediment traps, etc.

B. Erosion and sediment control measures described herein shall be continued until such time as permanent planting and restoration of natural areas has provided for final stabilization at project site.

C. Failure to install and maintain temporary erosion and sediment control measures throughout the construction period may be cause to halt construction by governing authorities until such measures are correctly installed and operational. Activity covered in this contract is regulated by Georgia's Erosion and Sedimentation Act (O.C.G.A. 12-7-1, *et seq*.).

D. It is the responsibility of the contractor to file the Notice of Intent and Notice of Termination. NDPES sampling is the responsibility of the Contractor.

1.02 RELATED SECTIONS

A. Section 02920 – Permanent (Perennial) Grassing and Landscaping

B. Construction Drawings.

1.03 REFERENCES

A. American Society for Testing and Materials (ASTM).

B. Georgia's Erosion and Sedimentation Act (O.C.G.A. 12-7-1, *et seq*.)

C. "Manual for Erosion and Sediment Control in Georgia" published by the State Soil and Water Conservation Commission of Georgia. Contractor shall be responsible for the acquisition and utilization of the latest edition of the "Manual for Erosion and Sediment Control in Georgia".

1.04 DEFINITIONS

A. Final Stabilization: All soil disturbing activities at the site have been completed, and that for unpaved areas and areas not covered by permanent structures, at least 70% of the soil surface is uniformly covered in permanent vegetation or equivalent permanent stabilization measures (such as the use of rip rap, gabions, permanent mulches, or geotextiles) have been employed.

B. Land-Disturbing Activity: Any activity which may result in soil erosion from water or wind and the movement of sediments into State waters or onto lands within the State, including, but not limited to clearing, grubbing, dredging, grading, excavating, transporting, and filling.

C. Stabilization: 70% of the surface area of the site is covered in a uniform, vegetative cover (permanent or temporary) or anchored mulch of the appropriate thickness with 90% coverage.

1.05 REGULATORY REQUIREMENTS

A. Contractor shall comply with applicable codes, rules, ordinances, regulations, and laws of local, municipal, state and/or federal authorities having jurisdiction over project.

PART 2 – PRODUCTS

2.01 STRUCTURAL PRACTICES

A. All products used must satisfy specifications set forth by the Georgia Department of Transportation and be included on the GDOT Qualified Products List.

2.02 MULCH

A. Dry straw, hay, or wood cellulose fiber of good quality, free of weeds and foreign matter detrimental to plant life.

2.03 TEMPORARY GRASSING

A. All grass seed shall be certified by the Georgia Department of Agriculture.

B. All grass seed shall be in undamaged containers showing percentage of seed mix, year of production, net weight, date of packaging, and location of packaging.

2.04 PERMANENT (PERENNIAL) GRASSING

A. See Section 02920 – Permanent (Perennial) Grassing and Landscaping.

2.05 FERTILIZER AND LIME

A. Fertilizer: Standard commercial grade grass fertilizer with a 10-10-10 (N-P-K) proportion.

B. Lime: Natural, agricultural grade, ground or pulverized dolomitic limestone.

2.06 DUST CONTROL

A. Water, calcium chloride, anionic asphalt emulsion, latex emulsion, resin-in-water emulsion or other approved by the Georgia Department of Transportation may be used.

PART 3 – EXECUTION

3.01 GENERAL

A. The Contractor shall prevent the escape of sediment from the area under construction by installing erosion and sediment control measures and practices prior to, or concurrent with, land-disturbing activities.

B. The Contractor shall maintain erosion and sediment control measures at all times.

C. The Contractor shall complete mulching, temporary grassing, or permanent (perennial) vegetation on all exposed areas within 14 days after disturbance.

D. All structural and vegetative erosion and sediment control measures shall be designed, installed and maintained according to the “Manual for Erosion and Sediment Control in Georgia”.

E. As a minimum, structural practices shall be located and installed, and all disturbed soil areas shall be stabilized using mulching and/or grassing, as specified by the Drawings. If full implementation of the Drawings does not provide for effective erosion and sediment control, the Contractor shall be responsible for the implementation of additional erosion and sediment control measures to control or treat the sediment source.

F. No runoff from disturbed areas shall leave the site untreated.

G. Erosion Control Schedule

1. Prior to the pre-construction conference, Contractor shall submit to the Engineer his proposed erosion control plan for the project in accordance with requirements of this section. The schedule shall be based on an analysis of the project conditions and shall be in written form. This schedule shall specifically indicate the sequence of clearing and grubbing, earthwork operations, including trenching and backfilling, construction of permanent erosion control features and the proposed uses of temporary erosion and sediment control features. Schedule shall also include proposed methods to prevent pollution of streams, lakes and rivers and other water resources.

2 Contractor shall outline his proposed methods of controlling erosion and preventing pollution on public and construction access roads, staging areas and waste disposal areas.

3 Construction shall not commence until the Engineer has accepted the aforementioned plans and schedules. Contractor will be responsible for accomplishment of work in accordance with accepted plans and schedules. Engineer may approve changes made necessary by unforeseen circumstances that are beyond the control of Contractor.

H. Engineer has the authority to limit the surface area of erodible earth materials exposed by clearing and grubbing, the surface area of erodible earth exposed by excavation and backfill operations, and to direct Contractor to provide immediate permanent or temporary erosion and pollution control measures to prevent contamination of adjacent land or water courses.

I. Clearing and grubbing operations shall be so scheduled and performed that grading operations and permanent erosion control features can immediately follow thereafter, if the project conditions permit. Otherwise, temporary erosion control measures will be required between successive construction stages.

J. Engineer will require Contractor to limit the area of excavation, trenching and pipe laying operations in progress commensurate with Contractor's capability and progress in keeping finish grading, mulching, seeding and other permanent and/or temporary measures current with accepted schedule.

3.02 STRUCTURAL PRACTICES

A. All structural practices shall be designed, installed and maintained in accordance with specifications set forth in Chapter 6, Section III of the "Manual for Erosion and Sediment Control in Georgia".

B. Sediment accumulation at structural practices shall not exceed 50% of structure

capacity or height.

C. All structural practices shall be inspected frequently and materials promptly repaired or replaced as necessary to allow proper function of the device.

D. Any construction vehicle passing from a disturbed area onto any paved area or public right-of-way shall pass over a gravel construction exit. If the gravel construction exit cannot adequately remove soil from the vehicle, the vehicle shall be washed and runoff routed to a sediment trap or basin. Any mud or debris tracked or spilled onto roadway shall be immediately removed.

3.03 MULCHING

A. All mulch used as a singular method for erosion control shall be applied and anchored in accordance with specifications set forth in Chapter 6, Section II of the "Manual for Erosion and Sediment Control in Georgia".

B. Mulch can be used for erosion control for up to six months provided that the mulch is applied at the appropriate depth (depending on the type of mulch used), anchored, and maintains a continuous 90% or greater cover of the soil surface.

C. Where staged construction or other conditions not controlled by Contractor prohibit the completion of work in a continuous manner, Engineer may order Contractor to apply mulch to an erodible area.

D. If the area being mulched will eventually support a cover of perennial vegetation, 20-30 pounds of nitrogen per acre shall be added in addition to the normal nitrogen application rate specified in Section 02920 – Permanent (Perennial) Grassing and Landscaping.

E. Mulch can be applied to areas at rough grade. With the use of an appropriate anchoring method, mulch may be applied to areas as steep as 2:1 (H:V).

F. All mulch shall be anchored. Install commercial netting according to manufacturer's specifications.

G. Wood waste shall be anchored with netting consisting of openings no larger than the average size of the wood waste chips.

3.04 TEMPORARY GRASSING

A. Temporary grassing shall be applied in accordance with specifications set forth in Chapter 6, Section II of the "Manual for Erosion and Sediment Control in Georgia".

B. Temporary grassing can be employed instead of mulch if an area will remain undisturbed for less than six months.

C. Where staged construction or other conditions not controlled by Contractor prohibit the completion of work in a continuous manner; Engineer may order Contractor to apply temporary grassing to an erodible area.

D. Temporary grassing shall consist of sowing a quick growing species of grass suitable to the area and season. Certified temporary grass seed shall be applied at the rates and dates as indicated in the Plans

3.05 PERMANENT (PERENNIAL) GRASSING

A. See Section 02920 – Permanent (Perennial) Grassing and Landscaping.

3.06 GRADING OPERATIONS

A. Grading operations shall be scheduled so that ground surface will be disturbed for the shortest possible time before permanent construction is installed. Large areas shall be maintained as flat as possible to minimize soil transport through surface flow.

B. Wherever steeper slopes or abrupt changes in grade are required, a compacted diversion or berm shall be constructed at the top of slope to cause surface water to flow along the diversion to a control point to be transported down slope in a slope drain. In no case shall surface water be allowed to flow uncontrolled down slopes.

C. Unless otherwise approved in writing by Engineer, construction operations in rivers, streams and impoundments shall be restricted to those areas that must be entered for the construction of temporary or permanent structures, or at locations shown on the Drawings.

D. Mechanized equipment shall not be operated in live streams except as may be minimally required, unless otherwise approved in writing by Engineer.

E. Frequent fording of live streams with construction equipment shall not be permitted. Temporary bridges or other structures, designed in accordance with specifications by the “Manual for Erosion and Sediment Control in Georgia”, shall be used whenever an appreciable number of stream crossings are necessary.

3.08 DUST CONTROL

A. Dust raised from vehicular traffic shall be controlled by wetting down the access

road with water. The use of a deliquescent chemical, such as calcium chloride, may be used if the relative humidity is over 30%. Chemicals shall be applied in accordance with the manufacturer's recommendations.

3.09 CLEAN-UP AND REMOVAL

A. Temporary erosion and sediment control measures shall be removed and bare areas stabilized when all areas draining to the control(s) are no longer under construction and have reached final stabilization.

B. All sediment accumulated at erosion and sediment control structures shall be removed and properly disposed of before the structure is removed.

C. Sediment deposits shall be uniformly spread at an appropriate location and stabilized with mulch and grassing.

D. All false-work, sheeting or piling which are to be removed, debris, and other obstructions shall be promptly cleared from rivers, streams and impoundments as soon as conditions permit.

END OF SECTION

SECTION 02512
ADJUSTMENT OF VALVE BOXES TO GRADE

PART 1 – GENERAL

1.01 DESCRIPTION

A. This item shall consist of adjusting existing valve boxes to grade. Work shall include all labor, materials, and other items necessary to bring the existing valve boxes to the finished asphalt elevation.

B. Milling or reclamation around valve boxes shall be accomplished with care to prevent damage to these facilities.

PART 2 – PRODUCTS

2.01 MATERIALS

A. Valve box risers shall be class 35B, gray iron, meeting the requirements of ASTM A48-83. Standard riser sizes shall be 1”, 1 ½”, and 2”. A minimum of one new riser may be used for each valve box.

PART 3: - EXECUTION

3.01 CONSTRUCTION METHODS

A. Whenever possible, valve boxes shall be raised or lowered by digging around the valve box a sufficient distance to allow the box to be adjusted by screwing up or down to the desired final grade.

B. Where the methods described in Paragraph A above cannot be employed to raise a valve box to grade, Contractor shall install a riser below the top section of the box.

C. All valve boxes shall be adjusted to final grade prior to overlay. Overlay is to be placed flush with top and continuously without patches.

END OF SECTION

SECTION 02513
CHEMICAL FEED BUILDING PACKAGE SYSTEM ENCLOSURE

A. SCOPE

Under this heading shall be included installation of the CHEMICAL FEED BUILDING as shown on the plans and as specified herein. The Contractor shall comply with all local codes and regulations of local utilities. Contractor shall coordinate work necessary for the completion of utilities with local utility companies and cooperate with the companies as required.

The entire package system enclosure shall be mounted as a pre-cast concrete building. Building shall be of one-piece molded design and shall have a 150 miles per hour wind load and a 35 pound per square foot snow load. Building shall be manufactured by Clay-Greene Pre-Cast Manufacturing or pre-approved equal. The entire frame mounted chemical feed station shall be covered by a pre-stressed concrete enclosure.

For pricing the Chemical Feed Building please contact Chris Keever at Cornerstone via email; chris@cornerstoneh2o.com.

The chemical feed building can be erected onsite, but it must meet all criteria for the Package System Enclosure. The criteria to meet this specification shall be the burden of the Contractor to provide an engineered design solution to meet this specification.

B. CODES & STANDARDS

The building shall meet the following codes and standards:

1. ACI-318-08, "Building Code Requirements for Reinforced Concrete". Concrete Reinforcing Institute, "Manual of Standard Practice".
2. ANSI/ASCE-7-05 "Building Code Requirements for Minimum Design Loads in Buildings and Other
3. Structures". Florida Building Code – 2010
4. UL-752 Test Method Level Four (4) for Bullet Resistance certified by an Independent Structural Engineer.
5. Concrete Reinforcing Institute, "Manual of Standard Practice".
6. PCI Design Handbook – 6th Edition.
7. International Building Code – 2012.
8. National Electrical Code – 2011.
9. Manual of Steel Construction – LRFD AISC – 13th Edition.
10. Manual of Steel Construction – ASD AISC – 13th Edition.

C. DIMENSIONS

1. Shall be shown on plans.

D. DESIGN LOADS

1. Seismic load performance category 'C', Exposure Group III

2. Standard Live Roof Load - 60 PSF
3. Standard Floor Load – N/A
4. Standard Wind Loading - 150 MPH

E. ROOF

1. Roof panel shall slope 2” from center to edge. The roof shall extend a minimum of 2.5” beyond the wall panel on each side. Roof and wall panels must each be produced as single component monolithic panels. No roof or vertical wall joints will be allowed, except at corners. Wall panels shall be set on top of prepared concrete foundations.

F. MATERIALS

1. Concrete: Steel reinforced, polypropylene fiber reinforced 6000 PSI. Minimum 28 days compressive strength, air entrained (ASTM C260)
2. Reinforced Steel: ASTM A615, Grade 60 unless otherwise indicated.
3. Reinforced Fiber: Polypropylene Fiber, Fortafiber @ 1.5 pounds per cubic yard or equal.
4. Roof and wall panels must each be produced as single component monolithic panels. No roof or vertical wall joints will be allowed, except at corners. Wall panels shall be set on top of prepared concrete foundation (prepared by installation contractor).
5. Panel Connections: All panels shall be securely welded together with 1/4" thick steel brackets. Steel is to be of structural quality, hot-rolled carbon complying with ASTM A283, Grade C. Cast-in anchors used for panel connections to be Dayton-Superior #F-63, or equal.
6. Doors and Frames: The building shall be equipped with one 3’-0” x 7’-0” x 18Ga Galvanized Steel Doors and frame.
7. Door Hardware:
    i. Hinges: Stainless Steel Vandal Proof (primed with non-removable hinge pins), 3 per door.
    ii. Lock Set: Mortise Lock with 6 pin removable core.
    iii. Threshold: Aluminum threshold with neoprene seal.
    iv. Doorstop: Hydraulic Door Closer.
    v. Drip Cap: National Guard 16A
8. Caulking: All joints between panels shall be caulked on the exterior and interior surface of the joints. Caulking shall be SIKAFLEX-1A elastic sealant.

G. ELECTRICAL

1. (1) Interior 4’ LED Light Fixtures, on Switch.
2. (1) Exterior 70W HPS Light Fixture Dark Sky Compliant on Photocell.
3. (2) 120v Interior Duplex Receptacles.
4. (1) 100AMP main 120/240V power distribution panel
5. Wiring to be in Surface Mounted EMT.

H. VENTILATION & HEAT

1. Bard Model W24A1-A 2-ton HVAC unit with 24,000 BTUH cooling capacity and 17,065 BTUH heating capacity.
2. Shall be 230V/60Hz/1pH

I. FINISH

1. Interior of Building: Walls and Ceiling – Smooth Concrete Finish, Sealed with Epoxy, White.
2. Exterior of Building: Neutral Trim with Pea Gravel Exposed Aggregate Finish
3. Roof to have smooth trowel finish sealed with a liquid applied roofing system, White.

J. ENGINEERING DRAWINGS & TESTING

At a minimum package chemical feed building shall be complete with the following documentation:

1. General Arrangement Drawings- manufacturer shall be responsible for one (1) pre-submittal drawing, one (1) submittal drawing and one (1) revision of drawing at no additional charge to the owner. Drawings must be digital rendered in solidworks or equal.
2. Lifting Plan- One (1) Standard lifting plan (drawing).
3. Quality Control- Manufacturer shall comply with their standard quality control documentation.
4. Manufacturer shall provide a minimum of two (2) days of start-up and training
5. Thirty (30) month warranty from date of shipment.

K. SHOP DRAWINGS

Shop drawings shall be submitted on each manufactured item supplied under this Section along with other information as specified herein.

L. INSPECTIONS

1. Periodic inspections of the project will be performed by the City through completion to ensure that the project is constructed in accordance with the approved plans and meets the requirements set forth in this document.

M. WARRANTY

The contractor shall warranty the installation against defects due to faulty materials and/or workmanship for a period of thirty (30) months from the date of acceptance by the City. The contractor shall be responsible for repair of leaks or other failures due to materials or workmanship during the warranty period. It the City makes such repairs, the contractor shall be responsible for reimbursing the costs.

END OF SECTION

SECTION 02514
WELL HOUSE ENCLOSURES

A. SCOPE

Under this heading shall be included installation of the WELL HOUSE ENCLOSURES as shown on the plans and as specified herein. The Contractor shall comply with all local codes and regulations of local utilities. Contractor shall coordinate work necessary for the completion of utilities with local utility companies and cooperate with the companies as required.

The entire package system enclosure shall be mounted in a tilt-up fiberglass (FRP) enclosure. Enclosure shall be of the one-piece molded design with a minimum thickness of 1/8" and a minimum of 1" of polyurethane foam insulation. Shall be manufactured by Clay-Greene.

For pricing the Chemical Feed Building please contact Chris Keever at Cornerstone via email; chris@cornerstoneh2o.com.

A field erected well house building can be erected onsite, but it must meet all criteria for the Package System Enclosure. The criteria to meet this specification shall be the burden of the contractor to provide an engineered design solution to meet this specification.

At a minimum the enclosure shall be equipped with.

B. PACKAGE SYSTEM ENCLOSURE

1. Constructed with rigid thixotropic polyester resin and 30% chopped glass in 1-1/2" to 2" random patterns or 1/8" to 3/16" thick.
2. Reinforcement of outer laminate shall consist of three plies of 1.5 ounce per foot chopped strand mat.
3. The inner laminate shall consist of 2 ply of 1.5 ounce per foot chopped mat.
4. Modified polyisocyanurate rigid foam one inch thick shall be used throughout as insulation. Insulation has a K-factor of .14 BTU in/hr/ft/F degree, R-7.2 per inch rating.
5. All gel coats and surface coating are a chemical resistant neopentyl glycol based polyester resin. Pigments are selected for their long term weatherability in corrosive applications.
6. Enclosure shall be equipped with two FRP vent hoods on opposite sides.
7. Hinge shall be stainless steel with stainless steel hasp.
8. Tilt-up shall be equipped with safety chains and springs.
9. Enclosure shall be equipped with Heavy-Duty (HD) option.
10. Conduit- All conduit shall be of the flexible liquid-tight type or PVC NEC approved as manufactured by Grainger, Hubbell or equal
11. One (1) duplex GFI receptacle for heater
12. All electrical wiring shall be per NEC-70

13. One (1) FRP intake hood
14. One (1) FRP exhaust hood- fan above shall be mounted
15. One (1) FRP Heater shall be mounted for use under freezing temperatures.

C. BASEPLATE, PIPE, VALVES, & FITTINGS

Baseplate shall be computer aided designed (CAD) in Solidworks and manufactured of a minimum of 6" channel steel which shall meet or exceed A-36 requirements. The design of all members shall be in accordance with AISC Steel Construction Manual (13th Edition). Pump, piping, valves, electrical components shall be securely attached to the baseplate. Four lifting lugs shall be securely mounted to the frame to allow for movement of the system as one unit. Complete package shall be certified under UL-QCZJ. Field assembled or component build units in the field shall not be allowed or accepted.

1. Painting of baseplate, pipe, valves & fittings (where needed) shall be Clay-Greene Blue or other equal alternative. Surfaces receiving paint shall be sandblasted to a bright metal appearance per SSPC-SP6 and shall include the removal of all rust, mill scale and other foreign materials. Painting operation shall take place immediately after surface preparation. Paint shall be a two-part high solids self-priming epoxy suitable for marine applications shall be PPG Amerlok-2 or equal. A minimum of two-coats shall be applied for a final 6-12mil dry thickness.
2. Baseplate shall be designed in a manner that supports the FRP enclosure fully without deformation. Structure shall have anchor locations built into frame for mounting into customer's slab.

D. SUBMITTALS/SHOP DRAWINGS

1. Shop drawings shall be submitted on each manufactured item supplied under this Section along with other information as specified herein

END OF SECTION

SECTION 02530

SANITARY SEWER COLLECTION SYSTEM

PART 1 – GENERAL

1.01 SCOPE

A. This section of the Specifications describes products to be incorporated into the sanitary sewer and requirements for the installation and use of these items. The contractor shall furnish all products and perform all labor necessary to fulfill the requirements of these Specifications. It includes but is not limited to the construction of the following items:

1. Sewer Pipes
2. Force Main
3. Connections to Existing System
4. Fittings, Adaptors, & Couplings

1.02 RELATED WORK

A. Other work required for the construction of the sanitary sewer collection system is specified in the following of the specifications:

Section No.	Title
02315	Excavation, Trenching, and Backfill for Utility Systems
02370	Soil Erosion Control
02920	Permanent (Perennial) Grassing & Landscaping
02540	Utility Directional Drilling

1.03 REFERENCES

A. ASTM D 3740-94a – Minimum Requirements for Agencies Engaged in the Testing and/or Inspection of Soil and Rock as Used in Engineering Design and Construction.

B. ASTM E 329-93b – Agencies Engaged in the Testing and/or Inspection of Materials Used in Construction.

C. ASTM D 3034-94 – Type PSM PVC Sewer Pipe and Fittings.

D. ASTM D 2321-89 – Underground Installation of Thermoplastic Pipe for Sewers and Other Gravity-Flow Installations.

E. ANSI/AWWA C 150/A-21.50-96 – Thickness Design of Ductile Iron Pipe.

F. ANSI/AWWA C 151/A-21.51-91 – Ductile Iron Pipe, Centrifugally Cast, for Water or Other Liquids.

G. ASTM A 746-95 – Ductile Iron Gravity Sewer Pipe.

H. ASTM D 3212-92 – Joints for Drain and Sewer Plastic Pipes Using Flexible Elastomeric Seals.

I. ASTM F 477-95 – Elastomeric Seals (Gaskets) for Joining Plastic Pipe.

J. ASTM D 3139-95 – PVC Pressure-Rated Pipe (SDR-Series).

K. ASTM D 3139-95 – Joints for Plastic Pressure Pipes Using Flexible Elastomeric Seams.

L. ASTM D 139-93a – Electric-Fusion (Arc) Welded Steel Pipe (NPS 4 and over).

M. ASTM C 478-94 – Precast Reinforced Concrete Manhole Sections.

N. ASTM C 443-94 – Joints for Circular Concrete Sewer and Culvert Pipe, Using Rubber Gaskets.

O. ACI 318-89 – Building code Requirements for Reinforced Concrete.

P. ASTM C 39-94 – Compressive Strength of Cylindrical Concrete Specimens.

Q. ASTM C 890-91 – Minimum Structural Design Loading for Monolithic or Sectional Precast Concrete Water and Wastewater Structures.

R. ASTM C 891-90 – Installation of Underground Precast Concrete Utility Structures.

S. ASTM C 913-89 – Precast Concrete Water and Wastewater Structures.

T. ASTM A 615/A 615 M-95b – Deformed and Plain Billet – Steel Bars for Concrete Reinforcement.

U. ANSI/AWWA C-500-93 – Metal-Seated Gate Valves for Water Supply Service.
V. ANSI/AWWA C-509-94 – Resilient-Seated Gate Valves for Water Supply Service.

W, AASHTO T 191-91 – Density of Soil in-Place by the Sand-Cone Method.

X. ASTM D2922-91 – Test Methods for Density of Soil and Soil Aggregate in Place by Nuclear Methods (Shallow Depths).

Y. ASTM D1557-91 – Laboratory Compaction Characteristics of Soil Using Modified Effort.

Z. ASTM D1556-90 – Density and Unit Weight of Soil in Place by the Sand Cone Method.

AA. ASTM D714-87 (Re-approved 1994) – Evaluation Degree of Blistering Paints.

BB. ASTM D2794-93 – Resistance of organic Coatings to the Effects of Rapid Deformation (Impact).

CC. ASTM E96-95 – Water Vapor Transmission of Materials.

DD. ANSI/AWWA C111/A21.11-95 – Rubber Gasket Joints for Ductile Iron Pressure Pipe and Fittings.

EE. ASTM A377-95 – Index and Specifications for Ductile Iron pressure Pipe and Fittings.

FF. ANSI/AWWA C600-93 – Installation of Ductile Iron Water Mains and their appurtenances.

GG. ASTM C890-73 (Latest Revision) – Standard Practice for Minimum Structural Design Loading for Monolithic or Sectional Precast Concrete for Water and Wastewater Structures.

HH. ASTM C891-78 (Latest Revision) – Standard Practice for Installation of Underground Precast concrete Utility Structures.

II. ASTM C913-79 (Latest Revision) – Precast Concrete Water and Wastewater Structures.

JJ. 1990 Edition of the Recommended Standards for Wastewater Facilities, Great Lakes – Upper Mississippi River Board of State Public Health and Environmental Manages, Section 38.31.

KK. ASTM C969 (Latest Revision) – Standard Practice for Infiltration and Exfiltration Acceptance Testing of Installed Precast Concrete Pipe Sewer Lines.

LL. ASTM F1417 (Latest Revision) – Standard Test Method for Installation Acceptance of Plastic Gravity Sewer Lines Using Low Pressure Air

MM. ASTM C1244 (Latest Revision) – Standard Test Method for Concrete Sewer Manholes by the Negative Air Pressure (Vacuum) Test Prior to Backfill.

1.04 OPTIONS

A. The Contractor will furnish the Engineer and the Owner a description of all materials before ordering. The Engineer will review the Contractor's submittals and provide in writing an acceptance or rejection of material. However, an acceptance of any material by the Engineer does not relieve the Contractor of this responsibility to meet the requirements of the construction plans or these specifications.

1.05 QUALITY ASSURANCE

A. Material and equipment shall be the standard product of a manufacturer who has manufactured them for a minimum of 2 years and who provides published data on the quality and performance of the project.

B. A Subcontractor for any part of the work must have experience on similar work and if required, furnish the Engineer with a list of projects and the Owners or Engineers who are familiar with his competence.

C. Devices, equipment, structures, and systems not designed by the Engineer that the Contractor wishes to furnish shall be designed either by a registered professional engineer or by someone the Engineer approved as qualified. If required, complete design calculations and assumptions shall be furnished to the Engineer or the Owner before acceptance.

D. All testing of the piping shall be made by the Contractor with equipment qualified by the Owner, Engineer, or utility company and in the presence of the Engineer, Owner and utility company. The Engineer or his representative reserves the right to accept or reject testing equipment.

E. Soil testing shall be done by a testing laboratory regularly engaged in soil testing and shall be approved by the Engineer prior to engagement. Mill certificates of test on materials made by manufacturers will be accepted provided the manufacturer maintains an adequate testing laboratory, make regularly scheduled tests that are spot checked by an outside laboratory, and furnishes satisfactory certificates with the name of the one making the test.

F. The details of all welded joints shall comply with all of the requirements for joints, which are accepted without qualification test under the "Code of Arc and Gas Welding in Building Construction of the American Welding Society".

Workmanship shall conform to A.I.S.C. Specifications for Fabrication and Erection. All work shall be executed by skilled workmen under experienced supervision. All welding shall be done by welders who have been previously qualified by tests as prescribed in the "American Welding Society Standard Qualification Procedure" to perform the type of work required. Welders shall have passed the qualification test (Qualification tests using procedures covered in AWSS B3.0 Part II) within the preceding 12 months.

1.06 ALTERNATES

A. The intention of these specifications is to produce the best system for the Owner. If the Contractor suggests that alternate material, equipment or procedures will improve the results at no additional costs, the Engineer and the Owner will examine the suggestion and, if accepted, it may be used. The basis upon which acceptance of an alternate will be given is its value to the Owner, and not for the convenience of the Contractor.

1.07 GUARANTEE

A. The contractor shall guarantee the quality of the materials, equipment, and workmanship for 12 months after acceptance of the completed Project. Defects discovered during that period shall be repaired by the Contractor, at no cost to the Owner. The Performance bond shall reflect this guarantee.

B. The manufacturers of equipment, valves, pumps, controls, measuring devices and special equipment shall test the equipment shall test the equipment at field conditions for compliance with the specifications. The manufacturer shall guarantee his product to be free from defects in material and factory workmanship for a period of 1 year from date of acceptance of the completed project, provided the product is properly installed, serviced and operated under normal conditions according to the manufacturer's instructions. The manufacturer shall furnish the service of a representative of the Engineer with a certificate that the equipment meets the specifications and will perform as required. The manufacturer shall furnish four field trips to the plant by a service representative during the first year after completion of the Project at no cost to the Owner.

1.08 EXISTING UTILTIES

A. All known utility facilities are shown schematically on the Plans and are not necessarily accurate in location as to plan or elevation. Utilities such as service lines or unknown facilities not shown on plans will not relieve the contractor of his responsibility under this requirement. "Existing Utility Facilities" means any utility that exists on the project in its original, relocated, or newly installed

position. The Contractor will be held responsible for the cost of repairs to damaged underground facilities: even when such facilities are shown on the plans. The Contractor shall contact all utility companies prior to beginning work and request an accurate field location of their respective utility lines.

B. Damage to any part of the existing water system facilities by the Contractor or Subcontractors, that is required by the user's and Owner's forces, shall be charged to the Contractor on the basis of time and material, plus 30% for overhead and administration.

1.09 ACCEPTANCE OF PORTIONS OF WORK

A. The Owner reserves the right to accept and use any portion of the work whenever it is considered in the public interest to do so.

1.10 RECORD DATA

A. It will be required of the Contractor to keep accurate, legible records of the location of any deviations from the construction drawings, as well as any additional items or structures added to the construction drawings. These records will be made available to the Engineer before his inspection for incorporation into the Engineer's Record Drawings.

PART 2 – PRODUCTS

Products and materials used in the work shall conform to the following:

2.01 SANITARY SEWER PIPE (GRAVITY SEWER)

A. Ductile Iron Pipe – Shall conform to ANSI A21.50 (AWWA C-150) latest revision, ANSI A21.51 (AWWA C-151) latest revision, and ASTM A746. All pipe, except specials, shall be furnished in nominal lengths of 18 or 20 feet. All ductile iron pipes and fittings shall be bituminous coated on the outside and lined with Tnemec 431 on the inside. The size of the pipe shall be as indicated on the drawings. All pipe shall have a Pressure Class 350 pressure rating.

1. Coating on the outside shall be an asphaltic coating approximately 1 mil thick. The finished coating shall be continuous, smooth, neither brittle when cold or sticky when exposed to the sun and shall be strongly adherent to the iron.

2. Tnemec Series 431 Polyamine Ceramic Epoxy is a two component, modified polyamine ceramic epoxy formulated for corrosion control and shall conform to the following:

   a. Solids by Volume: 100%

   b. Hazard Air Pollutants: Zero

   c. Ceramic Hollow Microspheres: 20 % by volume (no silica fume, fly ash, or alumina dust)

   d. Pigment volume concentration: less than 22%

   e. Coal-Tar Content: Zero

   f. Color- Sewer Pipe Green

   g. Dry Film Thickness- 40 mils.

B. Polyvinyl Chloride (PVC) Pipe – Gravity sewer pipe installed via open-cut shall be unplasticized polyvinyl chloride with integral wall bell and spigot joints with a rubber ring gasket. Pipe and fittings shall meet the requirements of ASTM D3034 and be SDR 26 (PS115) for use as a gravity sewer conduit. All pipe shall be installed in accordance with ASTM D2321, with additional bedding as required in these specifications or project details. Sizes and dimensions shall be as shown in the following table:

	Outside Diameter (in.)		Minimum Wall
Nominal Size	Average	Tolerance	Thickness (in.)
8”	8.400	±0.010	0.323
10”	10.500	±0.013	0.404
12”	12.500	±0.016	0.481
15”	15.300	±0.017	0.588
18”	18.701	±0.019	0.720
21”	22.047	±0.021	0.849
24”	24.803	±0.022	0.956
27”	27.953	±0.023	1.077
30”	32.000	±0.025	1.233
36”	38.300	±0.026	1.475
42”	44.500	±0.027	1.714
48”	50.800	±0.028	1.957

1. Minimum pipe stiffness (F/Y) at 5% deflection shall be 115 psi for all sizes when tested in accordance with ASTM D2412.

2. PVC gravity sewer pipe shall be supplied in lengths no longer than 14 feet.

3. Each length of pipe shall be marked with the manufacturer's name, trade name, nominal size, class, hydrostatic test pressure, manufacturer's standard symbol to signify it was tested, and date of manufacture. Each rubber ring shall be marked with the manufacturer's identification, the size, the year of manufacture, and the classes of pipe with which it can be used.

2.02 PIPE JOINTS (GRAVITY SEWER)

A. Ductile Iron Pipe (D.I.) – Shall be flexible rubber gasket Type II, or mechanical joint Type III, conforming to ASA Specification A21.11.

B. Polyvinyl Chloride (PVC) Pipe – Shall be flexible gasket joints for PVC sewer pipe and shall be compression type conforming to ASTM D-3212. The gasket shall conform to ASTM F-477.

C. Transition Joints – The transition between sewer pipes of different materials shall be made by either concrete collar or by special adapters made for that purpose. Adapters between cast iron pipe and pipes of other materials will be accepted upon approval by the Engineer. In cases where special adapters are not available or not approved by the Engineer, concrete collars will be used.

2.03 MANHOLES

A. Precast Concrete Manholes – shall be precast reinforced concrete manholes that meet the requirements of ASTM C478 and the details contained in the project drawings. The minimum compressive strength of the concrete in precast sections shall be 4000 psi.

1. Joints – shall be tongue and groove sealed with flexible gaskets or mastic sealant. Gaskets shall be O-Ring or Type A or B "Tylox" equivalent to ASTM C443; mastic shall be "Ram-nek" with primer. The "Ram-nek" primer shall be applied to all contact surfaces of the manhole joint at the factory in accordance with the manufacturer's instructions.

2. Manhole Boots – Provide Neoprene boot seal where sewer enters the manhole. Holes for pipes entering and leaving the manholes shall be core-drilled at the plant location or in the field.

B. Frames and Covers – Cast iron manhole frames and covers shall meet the requirements of ASTM A48 for Class 30 gray iron and all applicable local standards. All castings shall be tough, close grained, smooth and free from blow holes, blisters, shrinkage, strains, cracks, cold shots and other imperfections. No casting will be accepted which weighs less than 95 percent of the design weight. Shop drawings must indicate the design weight and provide sufficient dimensions to permit checking. All frames and covers shall be rated for H-20/HS-20 loading where called for on the Plans. All castings shall be thoroughly cleaned in the shop and given two coats of approved bituminous paint before rusting begins.

1. Manhole frames and covers shall be as shown on the Standard Detail Drawings.

2. All frames and covers shall have machined horizontal bearing surfaces.

3. All manholes shall have standard frames and covers except where specifically shown otherwise on the Drawings.

C. Pipe Connections – Shall have flexible watertight joints at the point of entry of any sewer main into the manhole. The joint shall be wedged rubber shape equivalent to “Press Wedge II,” or a rubber sleeve equivalent to “Kor-N-Seal” or “Lock-Joint.”

D. Drop Manhole – When incoming sewer pipes are more than two feet above the invert of the manhole that they are entering, a drop manhole must be provided.

2.04 FORCE MAIN

A. Polyvinyl Chloride (PVC) Pipe – Pipe 12” and smaller shall conform to AWWA C900 DR25, and pipe larger than 12” shall conform to AWWA C905 DR18. Pipe shall be made of compounds conforming to ASTM D1784 with a cell classification of 12454. Integral bells shall incorporate gaskets meeting the requirements of ASTM F477 and be locked into the bell. The assembled joint shall meet the requirements of ASTM D3139. The nominal laying length of the pipe shall be 20 feet.

B. Ductile Iron Pipe (D.I.) – Shall conform to ANSI A21.50 (AWWA C-150) latest revision, ANSI A21.51 (AWWA C-151) latest revision, and ASTM A746. All pipe, except specials, shall be furnished in nominal lengths of 18 to 20 feet. All ductile iron pipes and fittings shall be bituminous coated on the outside and shall have the interior lined with Tnemec 431 or approved equal. The size of the pipe shall

be as indicated on the drawings. Ductile iron piping shall be Class 350 for 12" and under, Class 250 for 14" to 20", and Class 200 for 24" and above.

1. Coating on the outside shall be an asphaltic coating approximately 1 mil thick. The finished coating shall be continuous, smooth, neither brittle when cold or sticky when exposed to the sun and shall be strongly adherent to the iron.

2. Tnemec Series 431 Polyamine Ceramic Epoxy is a two component, modified polyamine ceramic epoxy formulated for corrosion control and shall conform to the following:

   a. Solids by Volume: 100%

   b. Hazard Air Pollutants: Zero

   c. Ceramic Hollow Microspheres: 20 % by volume (no silica fume, fly ash, or alumina dust)

   d. Pigment volume concentration: less than 22%

   e. Coal-Tar Content: Zero

   f. Color- Sewer Pipe Green

   g. Dry Film Thickness- 40 mils.

C. HDPE Pipe

1. <u>Force main pipe shall be 16" DR17 IPS HDPE (125 psi) unless otherwise noted on the Plans.</u>

2. Method of Pipe Delivery – Piping shall be delivered to the job site in 20 or 40 linear foot sections for pipe greater than or equal to 5" diameter (nominal) and shall be delivered and installed from spools for pipe less than or equal to 4" in diameter (nominal).

3. Manufacturers:
   Manufacturers that are qualified and approved by the Engineer are listed below. Products from unapproved manufacturers are prohibited.

   ISCO Industries, LLC
   Performance Pipe, Inc.

JM Eagle

Materials used for the manufacture of polyethylene pipe and fittings shall be PE4710 high density polyethylene meeting cell classification 445574C per ASTM D 3350; and shall be listed in the name of the pipe and fitting Manufacturer in PPI1 TR-4, Recommended Hydrostatic Strengths and Design Stresses for Thermoplastic Pipe and Fittings Compounds, with a standard grade rating of 1600 psi at 73°F. The Manufacturer shall certify that the materials used to manufacture pipe and fittings meet these requirements.

4. Interchangeability of Pipe and Fittings: Polyethylene pipe and fittings shall be produced by the same Approved Manufacturer. Products made by sub-contractors or Manufacturer's distributor are not acceptable. Pipe and fittings from different Approved Manufacturers shall not be interchanged.

5. Polyethylene Pipe

   Polyethylene pipe shall be manufactured in accordance with ASTM D3035, Polyethylene (PE) Plastic Pipe and shall be so marked. Each production lot of pipe shall be tested for (from material or pipe) melt index, density, % carbon, (from pipe) dimensions and either quick burst or ring tensile strength (equipment permitting).

6. Service Identification Stripes

   Permanent identification of piping service shall be provided by co-extending four equally spaced color stripes into the pipe outside surface. The striping material shall be the same as the pipe material except for color. The following colors shall be used to identify piping service:

   Green stripes – sanitary sewer and force mains

   Stripes printed on the pipe outside surface shall not be acceptable.

7. Polyethylene Fittings & Custom Fabrications

   Polyethylene fittings and custom fabrications shall be molded or fabricated by the pipe manufacturer. Butt fusion outlets shall be made to the same outside diameter, wall thickness, and tolerances as the mating pipe. All fittings and custom fabrications shall be fully rated for the same internal pressure as the mating pipe. Pressure de-rated fabricated fittings are prohibited.

8. Molded Fittings

Molded fittings shall be manufactured in accordance with ASTM D3261, Butt Heat Fusion Polyethylene (PE) Plastic Fittings for Polyethylene (PE) Plastic Pipe and Tubing and shall be so marked. Each production lot of molded fittings shall be subjected to the tests required under ASTM D3261.

9. X-Ray Inspection

   The Manufacturer shall submit samples from each molded fittings production lot to x-ray inspection for voids and shall certify that voids were not found.

10. Fabricated Fittings

    Fabricated fittings shall be made by heat fusion joining specially machined shapes cut from pipe, polyethylene sheet stock, or molded fittings. Fabricated fittings shall be rated for internal pressure service equivalent to the full-service pressure rating of the mating pipe. Directional fittings 16" IPS and larger such as elbows, tees, crosses, etc., shall have a plain end inlet for butt fusion and flanged directional outlets. Part drawings shall be submitted for the approval of the Project Engineer.

11. Polyethylene Flange Adapters

    Flange adapters shall be made with sufficient through-bore length to be clamped in a butt fusion joining machine without the use of a stub-end holder. The sealing surface of the flange adapter shall be machined with a series of small v-shaped grooves to provide gasketless sealing, or to restrain the gasket against blow-out. Flanged transitions are acceptable only for above-ground connection.

12. Backing Rings & Flange Bolts

    Flange adapters shall be fitted with lap joint flanges pressure rated equal to or greater than the mating pipe. The lap joint flange bore shall be chamfered or radiused to provide clearance to the flange adapter radius. Flange bolts and nuts shall be Grade 2 or higher. Flanged transitions are acceptable only for above-ground connection.

13. HDPE Adapters for Buried Transitions

    Buried HDPE pipe to be connected to mechanical joint, bell-type joint or restrained joint pipe shall be provided at all transitions from HDPE pipe to non-HDPE pipe. Such restrained transitions shall include clamps, adapter

kits, and other manufacturer approved restraint items so that the connection is fully restrained. The transitions shall have stiffeners, shall be compatible with the pipe to be connected and shall be butt-fused to the HDPE pipe to be so connected.

D. Fittings for PVC and D.I. Pipe – All fitting shall be ductile iron, compact in weight and size, with restrained joints meeting the requirements of AWWA C110/ANSI A21.10, or AWWA C153/ANSI A21.4, and with a minimum rated working pressure of 250 psi. Fittings shall be mechanical joint and have a nominal wall thickness of Class 54 Ductile Iron Pipe. They shall be furnished with a bituminous outside coating and lined with Tnemec 431 Ceramic Epoxy or equal. The color of finish coat shall be sewer pipe green to match pipe. Special adapters shall be provided, as recommended by the manufacturer, to adapt the PVC pipe to mechanical jointing with cast or ductile iron pipe, fittings or valves.

E. Fittings for HDPE Pipe – All fittings shall be butt-fused as described above.

F. Thrust Blocking – Concrete having compressive strength of not less than 3000 psi shall be used as a cradle or thrust blocking where shown on the plans or where directed by the Engineer. Bends exceeding 22-1/4 degrees, crosses with one opening plugged, and all tees shall be backed with concrete as a thrust block. Blocking shall be placed between solid ground and the fitting to be anchored; the area of bearing on the pipe and on ground in each instance shall be that shown on the plans. The blocking shall be so placed that the pipe fitting joints will be accessible for repair. No extra payment will be made for the thrust blocks.

2.04 EXPANSION JOINTS

A. Expansion joints shall be manufactured of molded neoprene with filled triple arches. Joints shall be reinforced with galvanized 3/8-inch split steel retaining rings placed directly against the inside of the flanged to prevent damage to the rubber surface when the bolts are tightened. Expansion joints shall be suitable for buried service or above ground service. Flanges shall be drilled to ANSI 125#. Working pressures are as follows:

Size	Pressure
1"-4"	165#
5"-12"	140#
14"	85#
16"-24"	65#
26"-66"	55#

B. Maximum temperature shall be 180 degrees F and shall be capable of a maximum 1-1/2-inch lateral movement. Expansion joints shall be Model J-l as manufactured by the Red Valve Company or an approved equal.

2.05 FLANGED ADAPTORS

A. Flanged adaptors shown on the Drawings shall be "Uni-Flange" as manufactured by Uni-Flange Corporation, Series 400.

B. Flange shall be ductile iron designed to meet the requirements of ANSI D16. Set screw shall be AISI 4140 steel, heat treated, zinc

C. Where shown on the Drawings adaptor shall be harnessed.

2.06 FLEXIBLE COUPLINGS

A. Flexible couplings shall be either the split type or the sleeve Type as shown on The Drawings.

1. Split type coupling shall be used with all interior piping and with exterior piping as noted on the Drawings. The couplings shall be mechanical type for radius groove piping. The couplings shall mechanically engage and lock grooved pipe ends in a positive couple and allow for angular deflection and contraction and expansion.

2. Couplings shall consist of malleable iron, ASTM Specification A47, Grade 32510 housing clamps in two or more parts, a single chlorinated butyl composition sealing gasket with a "C" shaped cross-section and internal sealing lips projecting diagonally inward, and two or more oval track head type bolts with hexagonal heavy nuts conforming to ASTM Specification A183 and A194 to assemble the housing clamps. Bolts and nuts shall be hot dipped galvanized after fabrication.

3. Victaulic type couplings and fittings may be used in lieu of flanged joints if approved by the Engineer. Pipes shall be radius grooved as specified for use with the Victaulic couplings. Flanged adapter connections at fittings, valves, and equipment shall be Victaulic Vic Flange Style 741, equal by Gustin-Bacon Group, Division of Certain-Teed Products, Kansas City, Kansas, or equal.

4. Sleeve type couplings shall be used where shown on the Drawings. The couplings shall be of steel and shall be Dresser Style 38, Smith Blair Style 413, Baker Allsteel, or equal. The coupling shall be provided with hot dipped galvanized steel bolts and nuts unless indicated otherwise.

5. All couplings shall be furnished with the pipe stop removed.

6. Couplings shall be provided with gaskets of a composition suitable for exposure to the liquid within the pipe.

7. If the Contractor decides to use victaulic couplings in lieu of flanged joints, he shall be responsible for supplying supports for the joints.

2.07 FLEXIBLE CONNECTORS

A. Flexible connectors shall be constructed of bronze hose and braid with female copper tube sweat fittings brazed on each end. Connectors shall be Style BF as manufactured by Vibration Mountings and Controls, Inc., Butler, N.Y., equal by American, Waterbury, Conn., or equal.

2.08 PIPE SLEEVE SEALS

A. A watertight seal at all wall sleeves shall be obtained using expandable rubber seal rings equal to Link-Seal as shown on the Drawings. These seal rings shall be the modular mechanical type consisting of synthetic rubber links shaped to continuously fill the annual space between the pipe and wall sleeve. Links shall be loosely assembled with bolts to form a continuous rubber belt around the pipe with a pressure plate under each bolt head and nut. After the seal assembly is positioned in the sleeve, tightening of the bolts shall cause the rubber sealing sleeve. The watertight seal shall be effective against a hydrostatic head of at least 40 feet. The seal shall also be constructed so as to provide electrical insulation between the pipe and wall, thus reducing the chances of cathodic reaction between these two members.

B. Mechanical seals as described above shall be provided with 316 S.S. nuts, bolts and washers.

C. Annulus shall be grouted on both sides after installation with hydraulic cement.

2.09 TEES

A. Tees shall be 4-inches and the same diameter as the run of the pipe. They shall be of the same material as the sewer main.

2.10 LATERALS

A. Shall be Ductile Iron Pipe conforming to paragraph 2.1-B, with push-on joints or Polyvinyl Chloride pipe with bells and natural rubber rings for jointing, conforming, to Paragraph 2.1-A, PVC Pipe.

2.11 STONE BACKFILL

A. Shall be graded crushed granite with the following gradation:

Square Opening Size	Percent Passing
1”	100%
3/4”	90 to 100%
3/8”	0 to 65%
No. 4	0 to 25%

2.12 SAND BACKFILL

A. Shall be clean sand free of clay and organic material. Not more than 10% shall pass the No. 100 sieve.

2.13 BORROW

A. Where it is determined that sufficient suitable material is not available from the site to satisfactorily backfill the pipe to at least 2 feet above the top of the pipe, the Contractor shall furnish suitable sandy borrow material to accomplish the requirements. The materials shall have not more than 60% passing the No. 100 sieve, nor more than 20% passing the No. 200 sieve.

2.14 UNSUITABLE EXCAVATED MATERIAL

A. All unsuitable excavated material must be properly disposed of in a manner acceptable to the Public Works Department and in a manner that will not adversely affect the environment.

2.16 DETECTION WIRE

A. Detection Wire shall be #14 gauge insulated single strand copper wire.

2.17 STEEL CASING

A. Casing for Pipe Greater than 3 inches in diameter:

1. The casing shall be new and unused pipe. The casing shall be made from steel plate having a minimum yield strength of 35,000 psi. The steel plate shall also meet the chemical requirements of ASTM A 36.

2. The thickness of casing shown in paragraph B below are minimum thicknesses. Actual thicknesses shall be determined by the casing installer, based on evaluation of the required forces to be exerted on the casing when jacking. Any buckling of the casing due to jacking forces shall be repaired at no additional cost to the Owner.

3. The diameters of casing shown in Paragraph B below and shown on the drawings are minimum. Larger casings, with the Owner's approval, may be provided at no additional cost to the Owner, for whatever reasons the Contractor may decide, whether casing size availability, line and grade tolerances, soil conditions, etc.

4. Casing Sizes:

Pipe Diameter (inches)	Casing Diameter (inches)	Wall Thickness (inches)
4	10	0.188
6	12	0.188
8	16	0.281
10	20	0.281
12	20	0.344
14	24	0.344
16	24	0.375
18	30	0.469
24	36	0.531

B. Casing for pipe less than or equal to 3 inches in diameter: Casing shall be polyvinyl chloride pipe with a minimum wall thickness equal to Schedule 80.

C. Casing Spacers: Casing spacers shall meet one of the followings requirements:

1. Casing spacers shall be flanged, bolt-on style with a two-section stainless steel shell lined with a PVC liner, minimum 0.09-inch thick also having a hardness of 85-90 durometer. Runners shall be attached to stainless steel risers which shall be properly welded to the shell. The height of the runners and risers shall be manufactured such that the pipe does not float within the casing. Casing spacers shall be Cascade waterworks Manufacturing Company or Advanced Products & Systems, Inc.

2. Casing spacers shall be a two-section, flanged, bolted on style constructed of heat fused PVC coated steel, minimum 14-gauge band and 10-gauge risers, with 2-inch-wide glass reinforced polyester insulating skids, heavy-duty PVC inner liner, minimum 0.09-inch thick having a hardness of 85-90 durometer, and all stainless steel or cadmium plated hardware shall be Pipeline Seal and Insulator, Inc.

D. Carrier Pipe: Carrier pipe shall meet requirements as specified in these Specifications.

PART 3 – EXECUTION

3.01 ON-SITE OBSERVATION

A. The Engineer shall have the right to require that any portion of the work be done in his presence and if any work is covered up after such instruction, it shall be exposed by the Contractor for observation. However, if the Contractor notifies the Engineer that such work is scheduled and the Engineer fails to appear within 48 hours, the Contractor may proceed without him. All work done and materials furnished shall be subject to review by the Engineer or Project Representative. All improper work shall be reconstructed and all materials which do not conform to the requirements of the specifications shall be removed from the work upon notice being received from the Engineer for the rejection of such materials. The Engineer shall have the right to mark rejected materials so as to distinguish them as such.

3.02 HANDLING MATERIALS

A. Unloading: Furnish equipment and facilities for unloading, handling, distributing and storing pipe, fittings, valves, and accessories. Make equipment available at all times for use in unloading. Any cracked or damaged materials cannot be used and must be properly discarded.

B. Handling: Handle pipe, fittings, valves and accessories carefully to prevent shock or damage. Handle pipe by rolling on skids, forklift, or front loader. Do not use material damaged in handling.

C. Distribution: Distribute and place pipe and materials to not interfere with traffic. Do not string pipe more than 300 feet beyond the area where pipe is being laid. Do not obstruct drainage ditches.

D. Storage: Store all pipe which cannot be distributed along the route. Make arrangements for the use of suitable storage areas. Do not interfere with other contractors' right to access.

3.03 CONSTRUCTION ALONG HIGHWAYS, STREETS AND ROADWAYS

Install pipelines and accessories along highway, streets and roadways in accordance with the applicable regulations of the County, City and/or the Department of Transportation with reference to construction operations, safety, traffic control, road maintenance and repair.

A. Protection of Traffic: Provide and maintain suitable signs, barricades and lights for protection of traffic.
Replace all highway signs removed for construction as soon as possible. Do not close or block any highway, street, or roadway without first obtaining permission from the proper authorities.

Provide flagmen to direct and expedite the flow of traffic.

B. Construction Operations: Perform all work along highways, streets and roadways to least interfere with traffic.

1. Stripping: Where the pipeline is laid along road shoulders, strip and stockpile all sod, topsoil and other material suitable for shoulder restoration.

2. Trenching, Laying and Backfilling: Do not open the trench any further ahead of pipe laying operations than is necessary. Backfill and remove excess material immediately behind laying operations. Complete excavation and backfill for any portion of the trench in the same day.

3. Shaping: Reshape damaged slopes, side ditches, and ditch lines immediately after completing backfilling operations. Replace topsoil, sod, and any other materials removed from shoulders.

C. Excavated Materials: Do not place excavated material along highways, streets, and roadways in a manner which obstructs traffic. Sweep all scattered excavated materials off the pavements.

D. Drainage Structures: Keep all side ditches, culverts, cross drains, and other drainage structures clear of excavated material and free to drain at all times.

E. Maintaining Highways, Streets, Roadways, and Driveways: Maintain streets, highways, and roadways in suitable condition for movement of traffic until

completion and final acceptance of the work. Use steel running plate to maintain traffic until pavement is completed.

3.04 EXISTING UNDERGROUND UTILITIES AND OBSTRUCTIONS

A. It is the responsibility of the Contractor to locate all existing utilities along the path of his construction. The drawings shall indicate underground utilities or obstructions that are known to exist. Where these or unforeseen underground utilities are encountered, the location and alignment of the watermain may be changed, upon written approval of the Engineer and Owner, to avoid interference.

3.05 CONNECTIONS TO EXISTING PIPELINES

A. Before laying pipe, the Contractor shall locate the points of connection to existing pipelines and uncover as necessary for the Engineer and Owner to confirm the nature of the connections to be made. The Contractor shall furnish materials and make the connection to all existing pipelines. The Contractor will be observed during construction of tie-ins by the Owner and the Engineer. The Contractor shall use all available practices and resources to minimize the time the customers are without water.

3.06 PIPE DISTRIBUTION

A. Pipe shall be distributed and placed in such a manner that will not interfere with traffic.

B. No pipe shall be strung further along the route than 1,000 feet beyond the area in which the Contractor is actually working without written permission from the Owner and/or Engineer. The Owner and/or Engineer reserves the right to reduce this distance to a maximum distance of 200 feet in residential and commercial areas based on the effects of the distribution to the adjacent property owners.

C. No street or roadway may be closed for unloading of pipe without first obtaining permission from the proper authorities. The Contractor shall furnish and maintain proper warning signs and obstruction lights for the protection of traffic along highways, streets and roadways upon which pipe is distributed.

D. No distributed pipe shall be placed inside drainage ditches.

E. Distributed pipe shall be placed as far as possible from the roadway pavement, but no closer than five feet from the roadway pavement, as measured edge-to-edge.

F. Contractor shall not excavate sanitary sewer trenches more than 400 feet in advance of pipe laying.

G. Pipe distribution shall in no way, and shall under no circumstances, disturb wetlands (see Plans for Wetland Delineations).

3.07 LOCATION AND GRADE

A. The Drawings show the alignment and grade of the gravity sewer and the position of manholes and other appurtenances. The slope shown on the gravity sewer profile and/or called for in the Specifications is the slope of the invert of the pipe.

B. After the Contractor locates and marks the manhole centerlines or baselines of the gravity sewer, the Contractor shall perform clearing and grubbing.

3.08 LAYING AND JOINTING PIPE AND ACCESSORIES

A. Lay all pipe and fittings to accurately conform to the lines and grades established by the construction drawings.

B. Pipe Installation:

1. Proper implements, tools and facilities shall be provided for the safe performance of the Work. All pipe, fittings and valves shall be lowered carefully into the trench by means of slings, ropes or other suitable tools or equipment in such a manner as to prevent damage to sewer materials and protective coatings and linings. Under no circumstances shall sewer materials be dropped or dumped into the trench.

2. All pipe, fittings, valves, and other appurtenances shall be examined carefully for damage and other defects immediately before installation. Defective materials shall be marked and held for inspection by the Owner and/or Engineer, who may prescribe corrective repairs or reject the materials.

3. All lumps, blisters, and excess coating shall be removed form the socket and plain ends of each pipe, and the outside of the plain end and the inside of the bell shall be wiped clean and dry and free from dirt, sand,

grit or any foreign materials before the pipe is laid. No pipe which contains dirt shall be laid.

4. Foreign material shall be prevented from entering the pipe while it is being placed in the trench. No debris, tools, clothing or other materials shall be placed in the pipe at any time.

5. As each length of pipe is placed in the trench, the joint shall be assembled and the pipe brought to correct line and grade. The pipe shall be secured in place with approved backfill material.

6. It is common practice to lay pipe with the bells facing the direction in which work is progressing.

7. Applying pressure to the top of the pipe, such as with a backhoe bucket, to lower the pipe to the proper elevation or grade shall not be permitted.

8. Polyethylene Encasement: Installation shall be in accordance with AWWA C105 and the manufacturer's instructions. All ends shall be securely closed with tape and all damaged areas shall be completely repaired to the satisfaction of the Owner and/or Engineer.

C. Alignment and Gradient:

1. Lay pipe straight in alignment and gradient or follow true curves, where shown on the Drawings, as nearly as practicable. Do not deflect any joint more than the maximum deflection recommended by the manufacturer.

2. Maintain a transit, level and accessories on the job to lay out angles and ensure that deflection allowance are not exceeded.

3. The Contractor shall check the invert elevation at each manhole and the gravity sewer invert elevation at least three times daily, start, mid-day and end of day. Elevations shall be checked more frequently if more than 100 feet of pipe is installed in a day or if the gravity sewer is being constructed at minimum slope.

4. The Contractor shall check the horizontal alignment of the gravity sewer at the same schedule as for invert elevations.

5. Should any installed pipe have its alignment, grade, or joints disturbed after placement, it shall be taken up and re-laid.

D. Expediting of Work: Excavate, lay the pipe, and backfill as closely together as possible. Do not leave unjointed pipe in the trench overnight. Backfill and compact the trench as soon as possible after laying and jointing is completed. Cover the exposed end of the installed pipe each day at the close of work and at all other times when work is not in progress. If necessary to backfill over the end of an uncompleted pipe or accessory, close the end with a suitable plug, either push-on, mechanical joint, restrained joint or as approved by the Owner and/or Engineer.

E. Joint Assembly:

1. Push-on, mechanical, flange and restrained type joints shall be assembled in accordance with the manufacturer's recommendations.

2. Each restrained joint shall be inspected by the Contractor to insure that it has been "homed" 100%.

F. Cutting Pipe:

1. Cut ductile iron pipe using an abrasive wheel saw.

2. Cut PVC pipe using a suitable saw.

3. Remove all burrs and smooth the end before jointing.

4. The Contractor shall cut the pipe and bevel the end, as necessary, to provide the correct length of pipe necessary for installing the fittings, valves, accessories and closure pieces in the correct location. Only push-on or mechanical joint pipe shall be cut.

G. House Connections: Install wyes or tees in locations designated by the Owner and/or Engineer for future connection of service lines. Plug the branch of the wye or tee. Record the location of fittings installed on the Record Drawings.

H. Valve, Fitting and Pressure Gauge Installation:

1. Prior to installation, valves shall be inspected for direction of opening, number of turns to open, freedom of operation, tightness of pressure-containing bolting and test plugs, cleanliness of valve ports and especially seating surfaces, handling damage and cracks. Defective valves shall be corrected or held for inspection by the Owner and/or Engineer. Valves shall be closed before being installed.

2. Valves, fittings, plugs and caps shall be set and joined to the pipe in the manner specified in this Section for cleaning, laying and joining pipe,

except that 12-inch and larger valves shall be provided with special support, such as treated timbers, crushed stone, concrete pads or a sufficiently tamped trench bottom so that the pipe will not be required to support the weight of the valve.

3. A valve box shall be provided on each underground valve. They shall be carefully set, centered exactly over the operating nut and truly plumbed. The valve box shall not transmit shock or stress to the valve. The bottom flange of the lower belled portion of the box shall be placed below the valve operating nut. This flange shall be set on brick, so arranged that the weight of the valve box and superimposed loads will bear on the base and not on the valve or pipe. Extension stems shall be installed where depth of bury places the operating nut in excess of 30-inches beneath finished grade so as to set the top of the operating nut 30-inches below finished grade. The valve box cover shall be flush with the surface of the finished area or such other level as directed by the Owner and/or Engineer.

4. In no case shall valves be used to bring misaligned pipe into alignment during installation. Pipe shall be supported in such a manner as to prevent stress on the valve.

3.09 SEPARATION BETWEEN WATER & SANITARY SEWER

A. Parallel separation shall be 10 feet horizontal between sanitary sewers and any existing or proposed water mains. Deviation may be authorized for closer installation provided that the sewer is laid in a separate trench such that the bottom of the water main is at least 18 inches above the top of the sewer. Sanitary sewers crossing water mains shall be laid to provide a minimum vertical distance of 18 inches of vertical clearance, both water and sewer line. Where there is less than 18 inches of vertical clearance, both water and sewer lines shall be ductile iron for one full length on each side of the crossing with the water pipe joints located as far as possible from the sewer crossing.

3.10 VALVES AND APPURTENANCES

A. All valves and appurtenances shall be installed in the locations shown, true to alignment and rigidly supported. Any damage to the above items shall be repaired to the satisfaction of the Engineer before they are installed.

B. After installation, all valves and appurtenances shall be tested at least 2 hours at the working pressure corresponding to the class of pipe, unless a different test pressure is specified. If any point proves to be defective, it shall be repaired to the satisfaction of the Engineer.

C. Flanged and mechanical joints under water or exposed to weather shall be made with type 316 stainless steel bolts, nuts and washers.

D. Prior to assembly of split couplings, the grooves as well as other parts shall be thoroughly cleaned. The ends of the pipes and outside of the gaskets shall be moderately coated with petroleum jelly, cup grease, soft soap or graphite paste, and the gasket shall be slipped over one pipe end. After the other pipe has been brought to the correct position, the gasket shall be centered properly over the pipe ends with the lips against the pipes. The housing sections then shall be placed. After the bolts have been inserted, the nuts shall be tightened until the housing sections are firmly in contact, metal-to-metal, without excessive bolt tension.

E. Prior to the installation of sleeve-type couplings, the pipe ends shall be cleaned thoroughly for a distance of 8 inches. Soapy water may be used as a gasket lubricant. A follower and gasket, in that order, shall be slipped over each pipe to a distance of about 6 inches from the end, and the middle ring shall be placed on the already laid pipe end until it is properly centered over the joint. The other pipe end shall be inserted into the middle ring and brought to proper position in relation to the pipe already laid. The gaskets and followers shall then be pressed evenly and firmly into the middle ring flares. After the bolts have been inserted and all nuts have been made up finger tight, diametrically opposite nuts shall be progressively and uniformly tightened all around the joint, preferably by use of a torque wrench of the appropriate size and torque for the bolts.

F. Pressure gauges shall not be installed until after the substantial completion date unless otherwise requested by the Owner.

3.11 EXCAVATING, TRENCHING AND BACKFILLING

A. Refer to Section 02315 – Excavation, Bedding, & Backfill for Utility Systems

3.12 CONNECTION TO AN EXISTING MANHOLE

A. Connection to an existing manhole shall be made by mechanically coring into the wall structure of the manhole. Cored opening shall be sized to properly accommodate a rubber boot seal as specified in this section.

3.13 CONNECTION AND REPAIRS TO AN EXISTING SEWER MAIN

A. Where connections or repairs are required, Contractor shall only use solid sleeves and provide all materials and labor necessary to make the connection or repair to the existing pipeline, excluding service lines 6” or smaller.

3.14 CONCRETE COLLARS

A. Construct collars as shown on the Drawings.

3.15 DETECTION WIRE & DETECTION TAPE

A. Detection wire shall be provided over all non-ferrous pipe and properly connected to fittings and valves so that the pipeline may be located after burial. The wire should be buried one foot above the pipeline.

B. The Contractor shall install a continuous run of plasticized metallic tape above the top of the pipe used for gravity sewer and force mains at approximately 30" below finished grade.

C. In addition to the tape, the contractor shall install a continuous run of tracer wire attached to pipe. On pipe runs greater than 500', this tracer wire shall be attached to a 2" galvanized pipe with a 180-degree bend at top, extending 36" above grade for connection to locator equipment. The maximum distance between 2" pipe stubs shall be 500'.

D. Detection Tape shall be suitable for detection with metal pipe location equipment, color coded, and labeled to identify contents of pipe and brightly colored to contrast with the soil.

3.16 THRUST RESTRAINT

A. Provide restraint at all points where hydraulic thrust may develop.

B. Retainer Glands: Provide retainer glands where shown on the Drawings and all associated fittings, valves, and related piping. Retainer glands shall be installed in accordance with the manufacturer’s recommendations; particularly, the required torque of the setscrews. The Contractor shall furnish a torque wrench to verify the torque on all set screws which do not have inherent torque indicators.

C. Harnessing: Provide harness rods only where specifically shown on the Drawings or directed by the Owner and/or Engineer. Harness rods shall be manufactured in accordance with ASTM A 36 and shall have an allowable tensile stress of no less than 22,000 psi. Harness rods shall be hot dip galvanized or field coated with bitumastic before backfilling. Where possible, harness rods shall be installed through the mechanical joint bolt holes. Where it is not possible, provide 90-degree bend eye bolts. Eye bolts shall be of the same diameter as specified in AWWA C111 for that pipe size. The eye shall be welded closed. Where eye bolts

are used in conjunction with harness rods, an appropriate size washer shall be utilized with a nut on each end of the harness rod. Eye bolts shall be of the same material and coating as the harness rods.

D. Concrete Blocking:

1. Provide concrete blocking for all other bends, tees, valves, and other points where thrust may develop, except where other means of thrust restraint are specifically shown on the Drawings.

2. Form and pour concrete blocking at fittings as shown on the Drawings and as directed by the Owner and/or Engineer. Pour blocking against undisturbed earth. Increase dimensions when required by over excavation.

E. Thrust Collars: Collars shall be constructed as shown on the Drawings. Concrete and reinforcing steel shall meet the requirements specified in Article 2.03G of this Section. The welded-on collar shall be attached to the pipe by the pipe manufacturer.

3.17 INSPECTION AND TESTING

A. Clean and flush lines prior to testing. Clean and test lines before requesting final acceptance. Where any obstruction is met, clean the sewers by means of rods, swabs or other instruments. When requested by the Owner and/or Engineer, flush out lines and manholes before final inspection.

B. Gravity Sewers: Pipe lines shall be straight and show a uniform grade between manholes. Correct any discrepancies discovered during inspection.

1. Infiltration Tests: When groundwater is more than two feet above the top of the pipe, provide infiltration testing in accordance with ASTM C 969, with the exception that leakage must be limited to 25 gallons/inch of pipe diameter/mile/day.

a. Install suitable weirs in manholes selected by the Owner and/or Engineer to determine the leakage of ground water into the sewer. The maximum length of line for each infiltration test shall be 5,000 feet. Measure leakage only when all visible leaks have been required and the ground water is two feet above the top of the pipe. If leakage in any section of the sewer line exceeds 25 gallons/inch of pipe diameter/mile/day, locate and repair leaks. Repair methods must be approved by the Owner and/or Engineer. After repairs are completed, re-test for leakage.

b. Furnish, install, and remove the necessary weirs, plugs, and bulkheads required to perform the leakage tests. Where continuous monitoring of flow level is required, the Owner and/or Engineer will provide and operate monitoring equipment.

2. Exfiltration Tests: Choose one of the following when groundwater is less than two feet above the top of the pipe.

a. Hydrostatic Test: Provide testing in accordance with ASTM C 969, with the exception that leakage must be limited to 25 gallons/inch of pipe diameter/mile/day.

1. Test pipe between manholes with a minimum of 10 feet hydrostatic pressure, measured at the center of the pipe at the upstream manhole.

2. The ends of the pipe in the test section shall be closed with suitable watertight bulkheads. Inserted into the top of each bulkhead shall be a 2-inch pipe nipple with an elbow. At the upper end of the test section, a 12-inch riser pipe shall be connected to the 2-inch nipple. The test section of pipe shall be filled through the pipe connection in the lower bulkhead which shall be fitted with a valve, until all air is exhausted and until water overflows the riser pipe at the upper end.

Water may be introduced into the pipe 24 hours prior to the test period to allow complete saturation. House service lines, if installed, shall also be fitted with suitable bulkheads having provisions for the release of air while the test section is being filled with water.

3. During the test period, which shall extend over a period of two hours, water shall be introduced into the riser pipe from measured containers at such intervals as are necessary to maintain the water level at the top of the riser pipe. The total volume of water added during the test period shall not exceed 25 gallons/inch of pipe diameter/mile/day.

b. Low-Pressure Air Test:

1. Low-pressure air test shall conform to UNI-B-6.

2. Required test equipment, including inflatable balls, braces, air hose, air source, timer, rotameter as applicable, cut-off valves, pressure reducing valve, 0-15 psi pressure gauge, 0-5 psi pressure gauge with gradations in 0.1 psi and accuracy of ± two percent, shall be provided by the Contractor. Testing equipment shall be equal to Cherne Air-Loc Testing Systems.

3. The Contractor shall perform all tests in the presence of the Owner's Representative. Copies of all records will be given to the Engineer or the Owner. Such records shall show date, line number and stations, operator, and other such pertinent information as requested by the Engineer.

4. The Contractor is cautioned to observe proper safety precautions in performance of the air testing. It is imperative that plugs be properly secured and that care be exercised in their removal. Every precaution shall be taken to avoid the possibility of over-pressurizing the sewer line.

3. Deflection Test:

a. Test PVC gravity sewer for excessive deflection by passing a mandrel through the pipe. Deflection of the pipe shall not exceed the following:

Nominal Pipe Diameter	Maximum Allowable Deflection
≤ 12-inches	5%
15 to 30-inches	4%
> 30-inches	3%

b. The mandrel size shall be based upon the maximum possible inside diameter for the type of pipe being tested, taking into account the allowable manufacturing tolerances of the pipe. The mandrel shall have an odd number of legs, or vanes, with a quantity of such equal to or greater than nine. The legs of the mandrel shall be permanently attached to the mandrel. A mandrel with variable sizes shall not be allowed. The mandrel shall be constructed of steel aluminum or other material approved by the Owner and/or Engineer, and shall have sufficient rigidity so the legs of the mandrel will not deform when pulling through a pipe.

The mandrel dimensions shall be checked by the Owner and/or Engineer before use by the Contractor.

c. Excavate and install properly any section of pipe not passing this test. Re-test until results are satisfactory.

d. The test shall be performed within the first 30 days of installation and during final inspection, at the completion of this contract.

e. The mandrel shall be performed in accordance with ASTM D 3034, F679, or 2122.

4. Closed Circuit Television: If deemed necessary by the Owner and/or Engineer, the interior of the gravity sewers shall be subjected to a televised inspection. Prior to Final Acceptance the Owner and/or Engineer shall be provided with one copy of the TV inspection report and video cassette showing the entire length of gravity sewer being tested. The report shall contain the condition of pipe, type of pipe, depth, location of services, length, type joint, roundness, and distance between manholes. Any pipe found to be cracked, leading, misaligned, bellied or otherwise defective shall be removed and replaced.

C. Manholes: Prior to testing manholes for water tightness, all lift holes shall be plugged with a non-shrink grout, all joints between Precast sections shall be properly sealed and all pipe openings shall be temporarily plugged and properly braced. Each manhole shall pass one of the following tests:

1. Exfiltration Tests: The manhole, after proper preparation as noted above, shall be filled with water. The maximum allowable leakage shall be eight gallons per foot of depth per 24 hours for 48-inch diameter manholes. Tests shall last a minimum of eight hours. The manholes may be backfilled prior to testing.

2. Vacuum Tests: Vacuum tests shall be performed in accordance with ASTM C 1244, *Standard Test Method for Concrete Sewer Manholes by the Negative Air Pressure (Vacuum) Test.* The manhole, after proper preparation as noted above, shall be vacuum tested prior to backfilling. The test head shall be placed at the inside of the top of the cone section and the compression head inflated to 40 psi to effect a seal between the vacuum base and the manhole structure. Connect the vacuum pump to the outlet port with the valve open. A vacuum of 10-inches of mercury shall be drawn and the vacuum pump shut off. With the valves closed, the time shall be measured for the vacuum to drop to 9-inches. The manhole shall pass if the time is greater than 60 seconds for 48-inch

diameter manholes. If the manhole fails the initial test, necessary repairs shall be made with non-shrink grout while the vacuum is still being drawn. Retesting shall proceed until a satisfactory test is obtained. Vacuum testing equipment shall be equal to that manufactured by P.A. Glazier, Inc.

D. Force Main: Hydrostatic and leakage testing for force mains shall conform to Section 4 of AWWA C600 with the exception that the Contractor shall furnish all gauges, meters, pressure pumps, and other equipment needed to test the line.

1. Required Pressure - The pressure required for the field hydrostatic pressure test shall be 100 pounds per square inch at the highest point in the section being tested.

2. Duration of Test – The duration of each pressure test shall be two (2) hours.

3. Procedures: Each valved section of pipe shall be slowly filled with water to the specified test pressure (measured at the highest point in the section being tested). Pressure shall be supplied by means of a pump connected to the pipe in a satisfactory manner. The pump, pipe connection, and all necessary apparatus, gauges, and meters shall be furnished by the Contractor. The Contractor shall furnish all necessary labor and assistance in conducting the tests. The Owner will furnish, through connections made by the Contractor to existing mains, water for filling the lines for making the test.

4. Expelling Air Before Tests: Before applying the specified test pressure, all air shall be expelled from the pipe. To accomplish this, taps shall be made if necessary at points of highest elevation and afterward tightly plugged.

5. Examination Under Pressure: At intervals during the test (as determined by the Engineer), the route of the pipeline shall be inspected to locate any leaks or breaks. Any cracked or defective joints, cracked or defective pipe, fittings, or valves discovered in consequence of this pressure test shall be removed and replaced with sound material in the manner provided and the test shall be repeated until satisfactory results are obtained.

6. Allowable Leakage: The amount of leakage which will be permitted shall be in accordance with AWWA C600 Standards for all pressure. Leakage shall be defined as the quantity of water that must be supplied into the newly laid pipe, of any valved section thereof, to maintain the specified leakage test pressure after the pipe has been filled with water and the air

in the pipeline has been expelled. No pipe installation shall be accepted if the leakage is greater than that determined by the following formula:

$$L = \frac{SD(P)^{1/2}}{133{,}200}$$

In which L is the allowable leakage in gallons per hour; S is the length of pipe tested, in feet; D is the nominal diameter of the pipe, in inches; and P is the average test pressure during the leakage test, in pounds per square inch gauge.

7. Testing Schedule: Contractor must submit his plan for testing to the Engineer for review at least ten (10) days before starting the test. The Contractor shall remove and adequately dispose of all blocking material and equipment after completion and acceptance of the field hydrostatic test, unless otherwise directed by the Engineer. Any damage to the pipe coating shall be repaired by the Contractor. Lines shall be totally free and clean prior to final acceptance.

E. Re-Testing: Any alterations made to pipeline or manholes performed after initial testing shall be re-tested and pass again, regardless of initial test results.

F. Notification: Owner and/or Engineer shall be notified 24-hours in advance prior to Contractor performing any testing.

3.18 PROTECTION AND RESTORATION OF WORK AREA

A. General: Return all items and all areas disturbed, directly or indirectly by work under these Specifications, to their original condition or better, as quickly as possible after work is started.

1. The Contractor shall plan, coordinate, and prosecute the work such that disruption to personal property and business is held to a practical minimum.

2. All construction areas abutting lawns and yards of residential or commercial property shall be restored promptly. Backfilling of underground facilities, ditches, and disturbed areas shall be accomplished on a daily basis as work is completed. Finishing, dressing, and grassing shall be accomplished immediately thereafter, as a continuous operation within each area being constructed and with emphasis placed on completing each individual yard or business frontage.

Care shall be taken to provide positive drainage to avoid ponding or concentration of runoff.

3. Handwork, including raking and smoothing, shall be required to ensure that the removal of roots, sticks, rocks, and other debris is removed in order to provide a neat and pleasing appearance.

4. The Department of Transportation's engineer shall be authorized to stop all work by the Contractor when restoration and cleanup are unsatisfactory and to require appropriate remedial measures.

B. Existing Site Features: Protect, or remove and replace with the Owner and/or Engineer's approval, all fences, walkways, mailboxes, pipelines, drain culverts, power and telephone lines and cables, property pins, and other improvements that may be encountered in the work.

C. Cultivated Growth: Do not disturb cultivated trees or shrubbery unless approved by the Owner and/or Engineer. Any such trees or shrubbery which must be removed shall be heeled in and replanted under the direction of an experienced nurseryman.

D. Cutting of Trees: Do not cut trees for the performance of the work except as absolutely necessary. Protect trees that remain in the vicinity of the work form damage from equipment. Do not store spoil from excavation against the trunks. Remove excavated material stored over the root system of trees within 30 days to allow proper natural watering of the root system. Repair any damaged tree over 3-inches in diameter, not to be removed, under the direction of an experienced nurseryman. All trees and brush that require removal shall be promptly and completely removed from the work area and disposed of by the Contractor. No stumps, wood piles, or trash piles will be permitted on the work site.

E. Disposal of Rubbish: Dispose of all materials cleared and grubbed ruing the construction of the project in accordance with the applicable codes and rules of the appropriate city and/or county, state and federal regulatory agencies.

G. Swamps and Other Wetlands:

1. The Contractor shall not construct permanent roadbeds, berms, drainage structures or any other structures which alter the original topographic features within the easement.

2. All temporary construction or alterations to the original topography will incorporate measures to prevent erosion into the surrounding swamp or

wetland. All areas within the easement shall be returned to their original topographic condition as soon as possible after work is completed in the area. All materials of construction and other non-native materials shall be disposed by the Contractor.

3. The Contractor shall provide temporary culverts or other drainage structures, as necessary, to permit the free migration of water between portions of a swamp, wetland or stream which may be temporarily divided by construction.

2. The Contractor shall not spread, discharge or dump any fuel oil, gasoline, pesticide, or any other pollutant to adjacent swamps or wetlands.

END OF SECTION

SECTION 02540

UTILITY DIRECTIONAL DRILLING

PART 1 – GENERAL

1.01 REFERENCES

A. American Association of State Highway and Transportation Officials (AASHTO)
- AASHTO T 180 – (2017) Standard Method of Test for Moisture-Density Relations of Soils Using a 4.54-kg (10-lb) Rammer and a 457-mm (18-in.) Drop

B. American Water Works Association (AWWA)
- AWWA C605 – (2021) Underground Installation of Polyvinyl Chloride (PVC) and Molecularly Oriented Polyvinyl Chloride (PVCO) Pressure Pipe and Fittings
- AWWA C900 – (2022) Polyvinyl Chloride (PVC) Pressure Pipe, and Fabricated Fittings, 4 in. Through 60 in. (100mm Through 1,500mm)
- AWWA C906 – (2021) Polyethylene (PE) Pressure Pipe and Fittings, 4 in. through 65 in. (100 mm Through 1,650 mm), for Waterworks

C. American Society for Testing and Materials (ASTM)
- ASTM D1784 – (2020) Standard Specification for Rigid Poly(Vinyl Chloride) (PVC) Compounds and Chlorinated Poly(Vinyl Chloride) (CPVC) Compounds
- ASTM D1785 – (2021) Standard Specification for Poly(Vinyl Chloride) (PVC), Plastic Pipe, Schedules 40, 80, and 120
- ASTM D2241 – (2020) Standard Specification for Poly(Vinyl Chloride) (PVC) Pressure-Rated Pipe (SDR Series)
- ASTM D2513 – (2018a) Standard Specification for Polyethylene (PE) Gas Pressure Pipe, Tubing, and Fittings
- ASTM D3350 – (2021) Polyethylene Plastics Pipe and Fittings Materials
- ASTM F714 – (2024) Standard Specification for Polyethylene (PE) Plastic Pipe (DR-PR) Based on Outside Diameter
- ASTM F1674 – (2018) Standard Test Method for Joint Restraint Products for Use with PVC Pipe
- ASTM F2160 – (2022a) Standard Specification for Solid Wall High Density Polyethylene (HDPE) Conduit Based on Controlled Outside Diameter (COD)
- ASTM F2620 – (2024) Standard Practice for Heat Fusion Joining of Polyethylene Pipe and Fittings

D. National Electrical Manufacturers Association (NEMA)
    - ANSI Z535.1 – (2017) Safety Colors
    - NEMA TC 7 – (2021) Smooth-Wall Coilable and Straight Electrical Polyethylene Conduit

E. U.S. National Archives and Records Administration (NARA)
    - 29 CFR 1926.652 – Safety and Health Regulations for Construction; Subpart P, Excavations; Requirements for Protective Systems

F. U.S. Pipe
    - Rev. 11-2023 Trenchless Applications with Ductile Iron Pipe Submittal

G. American Water Military Services
    - Section 33 05 23.13 Horizontal Directional Drilling (HDD)

1.02 **QUALITY CONTROL**

1.02.1 Qualifications

Ensure that the Field supervisor and workers assigned to this project are experienced in work of this nature and have successfully completed similar projects of similar length, pipe type, pipe size, and soil type using directional drilling in the last three (3) years. As part of the bid submission, submit project descriptions which include, at a minimum, a listing of the location(s), date of project(s), owner, pipe type and material, size installed, length of installation, manufacturer of equipment used, and other information relevant to the successful completion of the project.

1.02.2 Safety

Include in directional drilling equipment machine safety requirements a common grounding system to prevent electrical shock in the event of underground cable strike. Ensure the grounding system connects all pieces of interconnecting machinery; the drill, med mixing system, drill power unit, drill rod trailer, operator's booth, worker grounding mats, and any other interconnected equipment to a common ground. Equip the drill with an "electrical strike" audible and visual warning system that notifies the system operators of an electrical strike.

1.02.3 Horizontal Directional Drilling Plan

Provide a plan prepared, signed, and sealed by a licensed Professional Engineer. Submit supporting calculations, certifications, and material product data demonstrating the strength of the product pipes for acceptance before the beginning of the installation. Demonstrate that the proposed material satisfies the purpose of the utility and withstands the design and construction stresses and pressures. The HDD Plan will include the following:

1.02.3.1 Layout Plan

Provide a plan location of the operation, including entry and exit points, discussing the relationship of the equipment, pipe assembly, and staging areas.

1.01.1.1 Utility Profile

Provide a profile of the utility plotted at a scale appropriate for the work.

1.01.1.2 Equipment List

Provide a directional drilling equipment list including: drilling rig, drill bit, back-reamer, mud mixing and pumping systems, downhole tools, guidance system, and rig safety system. Provide calibration records for guidance system.

1.01.1.3 Drilling Fluid Management Plan

Provide a drilling fluid management plan to include drilling fluid types and specifications, cleaning and recycling equipment, estimated flow rates, procedures for minimizing drilling fluid escape, and the method/location for final disposal of waste drilling fluids. Provide a frac out control plan, including frac control materials that will be onsite and contact information for emergency personnel.

1.01.1.4 Pedestrian Access

When and where installations disrupt pedestrian use of sidewalk for periods exceeding two consecutive days, provide an alternative route that meets current ADA requirements

1.01.1.5 Method and Procedures

Provide an outline of the methods and procedures, describing the pilot hole drilling procedure, the reaming operation, and the pullback procedure, including drawings, schedule of operations, specifications, and method of operation. Include pipe storage and handling details and pipeline assembly and installation procedures.

1.01.1.6 Safety Data Sheets

Submit safety data sheets for fluids and additives

1.01.1.7 Revisions

If site conditions change and require modification to the HDD Plan, submit revised drilling plan to achieve successful installation. Explain, in the revised submittal, the anticipated and encountered conditions that mandated the change in plans.

1.01.2 Fusion Technician Qualifications

The fusion technician must be qualified by the fusion equipment manufacturer to thermally butt-fuse the size of pipe used at the time of fusion performance. Each joint must be data-logged, recorded, and submitted for review.

1.02 **DELIVERY, STORAGE, AND HANDLING**

Inspect materials delivered to the site for damage. All materials found during inspection or during the progress of work to have cracks, flaws, surface abrasions, or other defects will be rejected. Remove defective materials from the job site.

PART 2 – PRODUCTS

1.03 **EQUIPMENT**

1.03.1 Drill Rod

Select the appropriate drill rod to be used. Submit certified statement that the drill rod has been inspected and is in satisfactory condition for its intended use.

1.04 **MATERIALS**

1.04.1 Pipe

~~1.04.1.1 Fusible PVC~~

~~Install [____] in. [(nominal)] diameter fusible polyvinyl chloride pipe [with a dimension ration of [18 (DR 18)] [14 (DR 14)] [____] conforming to AWWA C900] [with a standard dimension ratio of [17 (SDR 17)] [21 (SDR 21)] [26 (SDR 26)] [__] conforming to ASTM D2241] [, [Schedule 40] [Schedule 90] [____] conforming to ASTM D1785]. Provide pipe made from PVC compound meeting or exceeding cell classification 12454 per ASTM D1784. Provide fusible polyvinyl chloride pipe with plain ends. Pipe is [blue] [green] [purple] [____] in color.~~

~~Use Butt fusion jointing method for plain end PVC pipe. Comply with [AWWA C900] [AWWA C605] [ASTM F1674] [____] for butt fusion joints.~~

1.04.1.2 HDPE

HDPE Pipe for directional drilling to be the size and DR noted on the plans. See Section 11200/02530 for HDPE specifications for water/sewer use.

1.04.1.3 DIP

Utilize DIP equipped with low profile flexible restrained joints such as Flex Ring or TR Flex. Gripping push-on joint gaskets, or restrained joint gaskets are not permitted. All DIP shall be installed per DIPRA's Horizontal Directional Drilling with DIP Handbook to include strict adherence to maximum joint deflection.

1.04.2 Drilling Fluids

Use a high-quality bentonite drilling fluid to ensure hole stability, cuttings transport, bit and electronics cooling, and hole lubrication to reduce drag on the drill pipe and the product pipe. Use only fluid with a composition which complies with all Federal, State, and local environmental regulations.

1.04.3 Additives

Use admixtures as required to address soil conditions and water conditions such as water hardness, acidity, and alkalinity

1.04.4 Tracer Wire

Use a continuous sheathed solid conductor copper wire line, minimum #12 AWG. Sheathing must be color coded to match the utility.

PART 2 – EXECUTION

1.05 **EXAMINATION**

1.04.5 Soil Test Data

Provide written documentation of conformance with AASHTO T 180.

1.05 **INSTALLATION**

Ensure all utilities are located and clearly marked prior to start of excavation or drilling.

1.05.1 Drill Set-Up

Design and construct the drill entrance and exit pits.

1.05.1.1 Drilling Fluids

Mix the bentonite drilling fluid with potable water to ensure no contamination is introduced into the soil during the drilling, reaming, or pipe installation process. Make any required additive adjustments.

1.05.2 Drill Entrance and Exit Pits

Drill entrance and exit pits are required. Maintain at minimum size to allow only the minimum amount of drilling fluid storage prior to transfer to mud recycling or processing system or removal from the site.

Do not allow drilling mud to flow freely on the site or around the entrance or exit pits. Remove spilled mud and restore ground to original condition. [Provide shore puts in compliance with OSHA Standards, 29CFR 1926.652].

1.05.3 Drill Entrance and Exit Angle

Ensure entrance and exit angles and elevation profile maintains adequate cover to reduce risk of drilling fluid breakouts and ground exit occurs as specified herein. Ensure that entrance and exit angles generate pullback forces that do not exceed 5 percent strain on the selected pipe material.

1.05.4 Pilot Hole

The type and size of the pilot string cutting head and the diameter of the drill pipe are at the Contractor’s discretion. Not to exceed 4”

Plot Hole tolerances are as follows:

1.05.4.1 Vertical Tolerance:

Provide minimum cover below channel bottom as specified on the plans. Pilot hole may go deeper if necessary to prevent breakout.

1.05.4.2 Horizontal Tolerance:

Plus/minus – 152.4 cm (60 in.) from the centerline of the product pipe

1.05.4.3 Curve Radius:

No curve is acceptable with a radius less than 1,000 ft.

1.05.4.4 Entry Point Location:

Make pilot hole entry point within Plus/minus 60 in. of the location shown on the drawings or as directed by the Contracting Officer in the field.

1.05.4.5 Exit Point Location:

Make the exit point location within plus/minus 60 in. of the location shown on the drawings or as specified. Mandatory pipeline cover requirements are as shown in the drawings or as specified.

1.05.5 Guidance Systems

Allow walkover guidance systems where suitable for this project; use a magnetic survey tool locator installed behind the pilot string cutting head and an electric grid (tru-tracker) system for this project; shorter bores not under water ways. Ensure proper calibration of all equipment before commencing directional drilling operation.

1.05.6 Reaming

Conduct Reaming operations at the Contractor's discretion. Determine the type of back reamer to be utilized by the type of subsurface soil conditions that are encountered during the pilot hole drilling operation. The reamer type is at the Contractor's discretion

1.05.7 Pull Back

Fully assemble the entire pipeline to be installed vie direction drill prior to commencement of pull back operations. Install a continuous length of tracer wire for the full length of each run of nonmetallic pipe length of tracer wire for the full length of each run of nonmetallic pipe in accordance with ANSI Z535.1. Attach wire to top of pipe in such a manner that it will not be displaced during construction operations.

1.05.8 Drilling Fluids Disposal

Collect Drilling fluid returns in the entrance pit, exit pit, or spoils recovery pit. Immediately clean up any drilling fluid spills or overflows from these pits.

Dispose of fluids in a manner that is in compliance with all permits and applicable Federal, State, and local regulations. Safe and Proper disposal of the drilling fluids is the responsibility of the Contractor

Conduct Disposal in compliance with all relative environmental regulations, right-of-way and workspace agreements, and permit requirements.

1.05.9 Connection of Product Pipe to Pipeline

1.06 **FIELD QUALITY CONTROL**

1.06.1 Drill Logs

Maintain drilling logs that accurately provide drill bit location (both horizontally and vertically) at each rod, typically 3.048 m (10ft) along the drill path. In addition, keep logs that record, as a minimum, the following, every 15 minutes throughout each drill pass, back ream pass, or pipe installation pass

A. Drilling Fluid Pressure
B. Drilling Fluid Flow Rate
C. Drill Thrust Pressure
D. Drill Pullback Pressure
E. Drill Head Torque

Make all instrumentation, readings, and logs available to the Contracting Officer at all times during operation.

1.06.2 Field Tests

Perform field tests and provide labor, equipment, and incidentals required for testing. Submit test results, identifying any results that do not meet requirements, to the Contracting Officer within four days of test completion. Provide corrective action and retest pipe not meeting requirements. Provide corrective action as recommended by the pipe manufacturer and subject to approval by the Contracting Officer.

1.07 **CLOSEOUT ACTIVITIES**

Immediately upon completion of work, remove all rubbish and debris from the job site. Remove all construction equipment and implements of service leaving the entire area involved in a neat condition acceptable to the Contracting Officer. Immediately clean “blow holes” or “breakouts” of drilling fluid to the surface and return the surface area to its original condition. Dispose of all drilling fluids, oils, and separated materials in compliance with Federal, State, and local environmental regulations.

Submit an electronic copy and three hard copies of the record drawings to the Contracting Officer within five days after completing the pull back. Include in the

record drawings a plan, profile, and all information recorded during the progress of the work. Clearly tie the record drawings recorded during the progress of the work. Clearly tie the record drawings to the project's survey control. Maintain, and submit upon completion, signed complete work logs of guided directional drill operations

END OF SECTION

SECTION 02720
AGGREGATE BASE COURSE

PART 1 - GENERAL

1.01 SCOPE

A. This section specifies requirements for furnishing materials and constructing a quality controlled graded aggregate base course on a compacted subgrade, for flexible pavements.

B. Contractor shall provide all service, labor, materials, and equipment required for the aggregate base course necessary to complete the work as shown on the drawings or specified in these specifications, or as determined in the field jointly by the Contractor and Engineer.

1.02 RELATED SECTIONS

B. Section 02740 – Asphalt Concrete Paving

1.03 REFERENCES

A. AASHTO T 96-91 – Resistance to Abrasion of Small Size Coarse Aggregate by Use of Los Angeles Machine.

B. AASHTO T 180-90 – Moisture – Density Relations of Soils Using a 10-lb (4.5 kg) Rammer and an 18-in. (457 mm) Drop.

A. ASTM D 1556-90 – Density and Unit Weight of Soil in Place by the Sand-Cone Method.

B. ASTM D 1557-91 – Laboratory Compaction Characteristics of Soil Using Modified Effort.

C. ASTM D 2167-94 – Density and Unit Weight of Soil in Place by the Rubber Balloon Method.

D. ASTM D 2922-91 – Density of Soil and Soil-Aggregate in place by Nuclear Methods (Shallow Depth).

E. ASTM D 3017-88 (1993) – Water Content of Soil and Rock in Place by Nuclear Methods (Shallow Depth).

F. ASMT D 3740-94 – Minimum Requirements for Agencies Engaged in the Testing and/or Inspection of Soil and Rock Used in Engineering Design and Construction.

G. ASTM E 329-93 – Agencies Engaged in the Testing and/or Inspection of Materials Used in Construction.

1.04 REGULATORY REQUIREMENTS

A. Perform all work in accordance with the Department of Transportation, State of Georgia, Standard Specifications, Construction of Road and Bridges, current edition.

1.05 TESTING

A. Laboratory tests for moisture, density relationship for fill materials shall be in accordance with ASTM D 1557, (Modified Proctor).

B. In place density tests in accordance with ASTM D 1556 or ASTM D 2922.

C. Testing laboratory shall operate in accordance to ASTM D 3740 and E 329 and shall be accepted by the Engineer.

D. The testing laboratory and Project Engineer/Project Representative shall be given a minimum of 48 hours notice prior to taking any of the tests.

E. Testing shall be the responsibility of the Contractor and shall be performed at the Contractor's expense by a commercial testing laboratory that operates in accordance with subparagraph C above.

F. Test results shall be furnished to the Engineer.

G. ON SITE OBSERVATIONS OF WORK: The Owner's Representative or Engineer will have the right to require that any portion of the work be done in his presence and if the work is covered up after such instruction, it shall be exposed by the Contractor for observation at no additional cost to the Owner. However, if the Contractor notifies the Owner that such work is scheduled, and the Owner fails to appear within 48 hours, the Contractor may proceed without him. All work done and materials furnished shall be subject to review by the Owner, Engineer or Project Representative. Improper work shall be reconstructed, and all materials, which do not conform to the requirements of the specifications, shall be removed from the work upon notice being received from the Engineer for the rejection of such materials. The Engineer shall have the right to mark rejected materials so as to distinguish them as such.

The Contractor shall give the Owner, Project Engineer or Project Representative a minimum of 48 hours notice for all required observations or tests.

PART 2 – PRODUCTS

2.01 MATERIALS

A. Coarse Aggregate: Aggregate retained on the No. 4 sieve shall consist of durable, angular fragments of gravel or crushed stone obtained from an approved quarry, and shall be capable of withstanding the effects of handling, spreading, and compaction with minimum degradation.

B. Fine Aggregate: Material passing the No. 4 sieve shall consist essentially of particles produced from the crushing of coarse aggregate at the approved source. Other types of fine aggregate, if permitted for use, shall meet the Georgia Department of Transportation's requirements.

C. Grading: The Graded Aggregate Base Course material shall be of uniform quality throughout. The graded aggregate may be produced from an approved source or deposit which will yield a satisfactory mixture conforming to all requirements of these Specifications after it has been crushed or processed as a part of the mining operations, or the material may be furnished in two sizes of such gradation that when combined in the central mix plant the resultant mixture shall conform to the required Specifications. In addition, the aggregate shall be free from lumps and balls of clay, organic matter, objectionable coatings, and other foreign material and shall be durable and sound. The aggregate shall meet the applicable requirements of Section 815 – Graded Aggregate of the Department of Transportation, State of Georgia, Standard Specifications, Construction of Roads and Bridges, Current Edition

The material shall meet the following gradation:

Sieve Size	Percent by Weight Passing
2"	100
1-1 ½ "	95-100
1"	75-95
3/8"	40-75
#4	30-60
#10	20-45
#40	15-30
#200	5-20
Liquid Limit	0-25
Plasticity Index	0-6

PART 3 – EXECUTION

3.01 SUBGRADE PREPARATION

A. Verify subgrade has been inspected, is dry, and gradients and elevations are correct.

B. The subgrade shall be leveled to the lines and grades of the plans and cleaned of all foreign substances prior to constructing the base course.

C. Do not place base on soft, muddy or frozen surfaces.

D. Correct irregularities in subgrade gradient and elevation by scarifying, reshaping, and recompacting.

E. Thorough compaction of the subgrade with appropriate equipment. In general the upper 12 inches of the subgrade should be compacted to at least 100% of AASHTO T-99 maximum dry density. Sheepsfoot rollers usually perform well in cohesive soils such as clays and silts. Vibratory rollers and pneumatic tired rollers can be used in cohesionless soils as sands.

F. The surface of the subgrade shall be checked by the Engineer or his representative for adequate compaction and surface tolerances. Ruts or soft yielding spots that may appear in areas of the subgrade course having inadequate compaction, and areas not smooth or which vary in elevation more than 3/8-inch above or below the required grade established on the plans shall be corrected to the satisfaction of the Engineer or his designated representative. Base material shall not be placed until subgrade has been properly prepared and test results have so indicated.

3.02 AGGREGATE PLACEMENT

A. Aggregate shall be placed with an acceptable spreader in accordance with Department of Transportation, State of Georgia, Standard Specifications for Construction of Roads and Bridges, Current Edition, Section 300 and in accordance with all terms included in these specifications. (The spreader shall contain a hopper, and adjustable screed and be so designed that there will be a uniform, steady flow of material from the hopper. The spreader shall be capable of laying material without segregation across the full width of the lane to a uniform thickness and to a uniform loose density.) Spreaders are not required on curb and gutter road sections.

B. Level and contour surfaces to elevations and gradients indicated.

C. Add small quantities of fine aggregate to coarse aggregate as appropriate to assist compaction.

D. Add water to assist compaction. If excess water is apparent, remove aggregate and aerate to reduce moisture content.

E. Use mechanical tamping equipment in areas inaccessible to compaction equipment.

F. While at optimum moisture (± 1 – ½ %), compact the base course with rollers capable of obtaining the required density. Vibratory, flatwheel, and other rollers accepted by the Engineer may be used to obtain the required compaction. Rolling shall continue until the base is compacted to 98% of the maximum laboratory dry density as determined by ASTM D 1557 or AASHTO T 180. In-place density of the compacted base will be determined in accordance with ASTM D 1556 or ASTM D 2922.

3.03 TOLERANCES

A. Flatness: Maximum variation of ¼ inch measured with an acceptable 10-foot straight edge.

B. Scheduled Compacted Thickness: Within 3/8 inch.

C. Variation from Design Elevation: Within 3/8 inch.

D. Depth measurements for compacted thickness shall be made by test holes through the base course. Where the base course is deficient, correct such areas by scarifying, adding base material and recompacting as directed by the Engineer. Measurements shall be made at staggered intervals not to exceed 250 feet for two-lane streets and roads.

3.04 FIELD QUALITY CONTROL

A. Section 01400 – Quality Control

B. Density and moisture testing will be performed in accordance with AASHTO T 180.

C. If tests indicate Work does not meet specified requirements, remove Work, replace and retest.

D. Frequency of Tests:

1. Base Density – One (1) test per 5,000 square feet.

SECTION 02740
ASPHALTIC CONCRETE – BINDER & SURFACE COURSES

PART 1 – GENERAL

1.01 SCOPE

A. This section covers the general requirements for furnishing materials, labor, and equipment for installing asphalt concrete paving. The limits for the asphalt concrete paving are as shown on the construction plans or as denoted in these specifications.

B. Subgrade preparation shall include leveling, proof-rolling and compacting of the subgrade as required. Installation of the base course shall include the placing and compacting of the material with appropriate equipment. Pavement shall be placed as shown on the plans with the necessary equipment and shall include any prime coats or tack coats required. All work shall be in conformity with the lines, grades and typical cross-sections shown on the Plans. The Contractor must have all equipment and workers on the job site necessary to perform a given operation when it is initiated.

1.02 RELATED SECTIONS

NOT USED

1.03 REFERENCES

A. ASTM D 946-82 (Reapproved 1993) – Penetration-Graded Asphalt-Cement for Use in Pavement Construction.

B. ASTM E 329-93b – Agencies Engaged in the Testing and/or Inspection of Materials Used in Construction.

C. ASTM D 3740-94 – Minimum Requirements for Agencies Engaged in the Testing and/or Inspection of Soil and Rock Used in Engineering Design and Construction.

D. ASTM D 2726-93 – Bulk Specific Gravity and Density of Compacted Bituminous Mixtures Using Saturated Surface-Dry Specimens.

E. ASTM D 2950-91 – Density of Bituminous Concrete in Place by Nuclear Methods.

F. AASHTO-T 245-91 – Resistance to Plastic Flow of Bituminous Mixtures Using Marshall Apparatus.

G. AASHTO-T 179-88 – Effect of Heat and Air on Asphalt Materials (Thin-film Oven Test).

H. ASTM D-1188-89 – Bulk Specific Gravity and Density of Compacted Bituminous Mixtures Using Paraffin-Coated Specimens.

1.04 REGULATORY REQUIREMENTS

A. Perform work in accordance with Georgia Department of Transportation Standard Specifications for Construction of Highways and Bridges – 1993 Edition.

B. Mixing Plant: Conform to Georgia Department of Transportation Standard Specifications.

1.05 TESTING

A. Testing laboratory shall operate in accordance to ASTM D 3740 and E 329 and shall be accepted by the Engineer.

B. The testing laboratory and Project Engineer/Project Representative shall be given a minimum of 48 hours notice prior to taking any of the tests.

C. Testing shall be the responsibility of the Contractor and shall be performed at the Contractor's expense by a commercial testing laboratory that operates in accordance with subparagraph A above.

D. Test results shall be furnished to the Engineer in duplicate.

1.06 WEATHER CONDITIONS

A. Do not place asphalt mixture when ambient air temperature is less than that indicated in the Table nor when the surface is wet or frozen.

Lift Thickness	Min. Air Temperature, Degrees F.
1" or less	55
1.1" to 2"	45
2.1" to 3"	35
3.1" to 4"	30
4.1" to 8"	Contractor's Discretion

B. Mixture shall be delivered to the spreader at a temperature between 250 degrees F and 325 degrees F. Place mixture when temperature of the mixture is not more

than 15 degrees F below bitumen supplier's bill of lading and not more than the maximum specified temperature.

C. Do not mix or place asphalt concrete when the existing surface is wet or frozen.

PART 2 – PRODUCTS

2.01 PRIME COAT

A. Material: Shall consist of preparing and spraying the base course surface with a low viscosity liquid asphalt such as MC-30 and RC-30, which is known as a Cut-Back Asphalt, and allowing the asphalt to penetrate as far as possible.

B. The asphalt shall conform to Section 412 –Bituminous Prime of the Department of Transportation, State of Georgia, Standard Specifications, current edition.

2.02 TACK COAT

A. Material: Shall be AC-20 or AC-30, asphalt cement, conforming to Section 413 – Bituminous Tack Coat and Section 820 – Asphalt Cement of the Department of Transportation, State of Georgia, Standard Specifications, current edition. When the temperature in the shade exceeds 70° F, an emulsion such as CRS-2h or CRS-3 may be used.

2.03 ASPHALT CEMENT AND ADDITIVES

A. Asphalt Cement: Shall conform to the requirements of Section 820.1 – Asphalt Cement of the Department of Transportation, State of Georgia, Standard Specifications, current edition. The material shall be AC-30 with the exception that AC-20 having a penetration at 77ºF not exceeding 80 and an initial viscosity at 77ºF not less than 25 million poises may be used in lieu of AC-30. The loss on heating from the Thin-Film Oven Test shall not exceed 0.75%.

B. Anti-Stripping: Shall conform to the requirements of Section 831.04 – Heat Stable Anti-Stripping Additive of the Department of Transportation, State of Georgia, Standard Specifications, current edition.

2.04 AGGREGATES

A. General: Mineral aggregate shall be composed of fine aggregate or a combination of fine and coarse aggregate. Coarse aggregate shall be that portion of the material retained on a No. 8 Sieve.

B. Fine aggregate shall be considered that portion passing the No. 8 Sieve. Fine aggregate, coarse aggregate, and any additives in combination with the specified percentage of asphalt cement shall meet the requirements of test specified, before approval may be given for their individual use.

C. Fine aggregate: Shall conform to the requirements of Section 802.01 – Fine Aggregate for Asphaltic Concrete of the Department of Transportation, State of Georgia, Standard Specifications, current edition.

D. Coarse aggregate: Shall conform to the requirements of Section 802.02 – Coarse Aggregate for Asphaltic Concrete of the Department of Transportation, State of Georgia, Standard Specifications, current edition.

2.05 HOT MIX ASPHALTIC CONCRETE COURSES

A. General

1. Hot Mix Asphaltic Concrete shall conform to an approved Georgia Department of transportation Designed/Approved Mix and shall be a uniform mixture of aggregates, bituminous material, and if required, hydrated lime, mineral filler, or any other approved additive. The constituents shall be proportioned so as to produce mixtures meeting the requirements given. The general composition limits prescribed are extreme ranges within which the Job Mix Formula must be established. All mixtures shall be based on a design analysis meeting the requirements. Contractor shall submit mix design to the Engineer for approval prior to placement of asphalt.

2. For all Asphalt Mixtures, the Contractor shall exercise reasonable control of the materials so that extreme variations do not occur. The gradation shall be maintained within the composition limits as specified.

3. If the results of any control tests indicate that the characteristic tested does not conform to the Job Mix Formula within the Mixture Control Tolerances as specified, immediate corrective action shall be taken as necessary to assure that the Contractor's quality Control Methods are effective.

B. Binder Course: The Binder Course shall consist of fine and coarse aggregate and mineral filler uniformly mixed with hot mix asphalt cement in an approved mixing plant. The job mix shall be of the following type: 19 mm Superpave and shall conform to Section 828, Department of Transportation, State of Georgia, Standard Specifications, current edition.

C. Surface Course: The Surface Course shall consist of fine and coarse aggregate and mineral filler uniformly mixed with hot mix asphalt cement in an approved mixing plant. The job mix shall be of the following type: 9.5 mm Superpave "Type II" and shall conform to Section 828, Department of Transportation, State of Georgia, Standard Specifications, current edition.

D. A job mix formula indicating the single definite percentage for each sieve fraction of aggregate and for asphalt shall be submitted prior to surfacing operations. The job mix formula shall also show the stability as determined by the Marshall Method, the percent voids, the percent voids filled with asphalt, and the unit weight per cubic foot of compacted mix.

E. The general composition limits are extreme ranges of tolerances to govern mixes made from any raw materials meeting the specifications. The submission of the job mix formula shall bind the Contractor to furnish paving mixture meeting the exact formula within allowable tolerances of plus or minus ½ per cent (1/2%) for asphalt, plus or minus 7 percent (7%) of ½ inch and larger sieve sizes, plus or minus 5 percent (5%) for material passing the ½ inch thick sieve and retained on the No. 200, and plus or minus ½ percent of material passing the No. 200.

F. Compaction shall be done with an 8 to 10-ton steel-wheeled roller or other means approved by the Engineer. Thickness shall not vary more than one-fourth inch and smoothness shall not exceed one-eighth inch for a ten-foot straight edge.

PART 3 – EXECUTION

3.01 EXAMINATION

A. ON-SITE OBSERVATIONS: The Owner's Representative or Engineer will have the right to require that any portion of the work to be done in his presence and if the work is covered up after such instruction, it shall be exposed by the Contractor for observation at no additional cost to the Owner. However, if the Contractor notifies the Owner that such work is scheduled, and the Owner fails to appear within 48 hours, the Contractor may proceed without him. All work done and materials furnished shall be subject to review by the Owner or Engineer. Improper work shall be reconstructed, and all materials, which do not conform to the requirements of the specifications, shall be removed from the work upon notice being received from the Engineer for the rejection of such materials. The Engineer shall have the right to mark rejected materials so as to distinguish them as such.

B. Contractor shall verify that the base has been inspected, is dry, and gradients and elevations are correct.

3.02 PREPARATION

A. Apply prime coat in accordance with Section 412 - Bituminous Prime of the Department of Transportation, State of Georgia, Standard Specifications, current edition. Rate of application shall be 0.20 gallons per square yard. All irregularities in the base course surface shall be corrected prior to application of the prime coat.

B. Do not apply prime to a wet surface when the temperature is below 40ºF in the shade. Do not apply prime when rain threatens nor when weather conditions prevent proper construction of prime coat.

C. Apply tack coat in accordance with Section 413 – Bituminous Tack Coat of the Department of Transportation, State of Georgia, Standard Specifications, current edition. Rate of application shall be 0.06 gallons per square yard of surface.

D. Work shall be planned so that no more tack coat than is necessary for the day's operation is placed on the surface. All traffic not essential to the work should be kept off the tack coat.

E. Apply tack coat to contact surfaces of curbs and gutters. Apply in manner so exposed curb or gutter surfaces are not stained.

F. Coat surfaces of manhole frames and inlets frames with oil to prevent bond with asphalt pavement. Do not tack coat these surfaces.

G. Before beginning the application of the hot mix asphaltic concrete pavement, the existing surface shall be cleaned to the satisfaction of the engineer.

H. Patching and Repair of Minor Defects: All potholes and broken areas in the existing surface and base, which require patching as directed by the Engineer, shall be corrected prior to placing any leveling or surface course. Areas to be patched shall be sawcut out, trimmed to vertical sides, and all loose material removed. These areas shall be filled with concrete pavement patch as detailed in the Plans. The patch shall then be cleaned, primed, and tack coated.

3.03 PLACEMENT

A. Construction shall be in accordance with Section 400 – Hot Mix Asphaltic Concrete Surface Construction of the Department of Transportation, State of Georgia, Standard Specifications, current edition.

B. Asphaltic concrete shall not be placed on a surface that is wet or frozen.

C. Compaction shall commence as soon as possible after the mixture has been spread to the desired thickness. Compaction shall be continuous and uniform over the entire surface. Do not displace or extrude pavement from position. Hand compact in areas inaccessible to rolling equipment. Perform rolling with consecutive passes to achieve even and smooth finish without roller marks. Compaction rolling shall be complete before material temperature drops below 185° F.

D. Areas of pavement with deficient thickness or density shall be removed and replaced at no additional cost to the Owner.

3.04 TOLERANCES

B. General: All paving shall be subject to visual and straightedge inspection during construction operations and thereafter prior to final acceptance. A 10-foot straightedge shall be maintained in the vicinity of the paving operation at all times for the purpose of measuring surface irregularities on all paving courses. The straightedge and labor for its use shall be provided by the Contractor. The surface of all courses shall be inspected with the straightedge as necessary to detect surface irregularities. Irregularities such as rippling, tearing, or pulling, which in the judgment of the Engineer indicate a continuing problem in equipment, mixture or operation technique, will not be permitted to recur. The paving operation shall be stopped until appropriate steps are taken by the Contractor to correct the problem.

B. Flatness: All irregularities in excess of ⅛" in 10' for surface courses and $^{3}/_{16}$" in 10' for intermediate courses shall be corrected.

C. Variation from Design Elevation: Less than ¼".

D. Scheduled Compaction Thickness: Less than ¼" under tolerance.

E. Pavement Deficient in Thickness: When measurement of any core indicates that the pavement is deficient in thickness, additional cores will be drilled 10' either side of the deficient core along the centerline of the land until the cores indicate that the thickness conforms to the above specified requirements. A core indicating thickness deficiencies is considered a failed test. Pavement deficient in thickness shall be removed and replaced with the appropriate thickness of materials. If the Contractor believes that the cores and measurements taken are not sufficient to indicate fairly the actually thickness of the pavement, additional cores and measurements will be taken, provided the Contractor will bear the extra cost of drilling the cores and filling the holes in the roadway as directed.

3.05 FIELD QUALITY CONTROL

A. Quality acceptance of the in-place density of the surface course shall be in accordance with Section 400.05 – Construction, subparagraphs F and G of the Department of Transportation, State of Georgia, Standard Specifications, current edition.

B. Density Testing: Performed in accordance with ASTM D 2726 and ASTM D 2950. Core samples for each day's operation shall be taken, tested, and the results reported to the Engineer the following day. The areas sampled shall be properly restored by the Contractor at no additional cost to the Owner. Compaction must be accomplished when the temperature of the mix is above 185° F and below 300° F. When the density of the compacted course is less than 96% or more than 100% of the maximum laboratory density, the course will be rejected.

C. Temperature:

1. Asphaltic concrete shall not exceed 325° F at any time.

2. Temperature at time of loading shall be recorded on the truck delivery ticket.

D. Frequency of Test:

1. Asphaltic Concrete – One (1) test for each 250 tons placed:

a. Asphalt extraction and gradation test

b. Marshal Stability Test

c. Core Sample

2. Field determination of density by the nuclear method every 5,000 square feet during construction of the base course.

3.06 REMOVAL AND REPLACEMENT OF PAVEMENT

A. General: The removal and replacement of pavement includes two types of pavements which are to be cut and replaced, to cut for pavement widening, or to be cut for the installation of curb and gutter; Asphalt Concrete Pavement and Portland Cement Concrete. This includes both Class "A" Pavement Replacement and Class "B" pavement widening.

B. Class "A" Pavement Replacement: Pavement and base course which must be removed for constructing sewers, manholes, force mains, water lines, and all

other appurtenances in streets shall be replaced with the paving section shown on the miscellaneous details of the construction drawings. The pavement shall be removed to neat lines cut by a masonry saw within the limits shown on the detailed drawings. The base material removed shall be salvaged and stored at the site, if satisfactory for reuse. Backfill shall be thoroughly compacted prior to concrete base. Asphalt topping shall then be applied. The asphalt paving shall be of the following type: to match the existing asphalt pavement, and shall be equal or better than the original pavement. Asphalt patches shall be thoroughly rolled or tamped with a mechanical roller or tamper. Rolling of patches with truck tires will not be permitted.

C. Class "B" Pavement Widening: Pavement and base course which must be removed and replaced in accordance with the paving section on the Miscellaneous Details of the construction drawings. The pavement shall be removed to neat lines cut with a masonry saw, within the limits shown on the detailed drawings. The base material removed shall be salvaged and stored at the site, if satisfactory for reuse. Backfill shall be thoroughly compacted prior to concrete base. An asphalt overlay shall then be applied to the entire roadway and shall be of the following type: to match the existing asphalt pavement. The asphalt overlay shall be thoroughly rolled or tamped with a mechanical roller or tamper.

D. Concrete Pavement: Where the installation of pipe involves the cutting of concrete, the cutting shall be kept to a minimum. Base material removed shall be salvaged for reuse. Once the pipe is installed, the Contractor shall compact the trench to 98% density according to modified proctor. After compaction, Contractor shall install and compact 6" graded aggregate base. The base shall be poured and finished. Concrete shall be 3,000 psi and shall be equal or better than the original pavement.

E. When sidewalks are removed or replaced, match existing finish and construct sidewalks as detailed on the plans.

3.07 ADJUSTMENT OF MANHOLES / VALVE BOXES

A. This item covers the adjustment of manholes and valve boxes to finished grade prior to paving.

B. The Contractor, the Engineer and the Owner's representative shall make a reasonable effort to locate all manholes and valve boxes that will fall within the limits of paving. The existing manhole frame and cover shall be removed and the manhole shall be adjusted to the correct grade by the removal of brick or manhole section or the addition of brick. The existing manhole frame and cover shall be replaced in the mortar bed. Existing valve boxes shall be raised to the proposed finished grade and a square concrete pad poured around the box. On existing

manholes, the contractor can install a riser ring such as Reel Corporation Type 1 adjustable manhole riser if approved by the Engineer and Owner.

3.08 PAVING REINFORCING FABRIC

A. This work shall consist of furnishing and placing asphalt overlay geotextile (paving fabric) beneath a pavement overlay or between pavement layers to provide a water-resistant membrane and crack-retarding layer.

B. Paving Fabric: The paving fabric will be a staple fiber, needle-punched, nonwoven material consisting of at least 85 percent by weight polyolefins, polyesters or polyamides. The paving fabric shall be resistant to chemical attack, rot and mildew and shall have no tears or defects that will adversely alter its physical properties. The fabric shall be specifically designed for pavement applications and be heat-set on one side to reduce bleed-through of tack coat and to minimize fabric pick-up by construction equipment during installation. The fabric shall meet the physical requirements specified in Table 1.

C. Tack Coat: The tack coat used to impregnate the fabric and bond the fabric to the pavement shall be the same grade asphalt cement as used in the hot mix asphalt. A cationic or anionic emulsion may be used as approved by the engineer. The contractor shall follow the recommendations of the paving fabric manufacturer when an asphalt emulsion is used. The use of cutbacks or emulsions that contain solvents shall not be permitted.

D. Shipping and Storage: The paving fabric shall be kept dry and wrapped such that it is protected from the elements during shipping and storage. If stored outdoors, the fabric shall be elevated and protected with a waterproof cover. The paving fabric shall be labeled in accordance with ASTM D 4873-88, “Standard Guide for Identification, Storage, and Handling of Geotextiles.”

E. Weather Limitations: The air and pavement temperatures shall be at least 50° F and rising for placement of asphalt cement and shall be at least 60° F and rising for placement of asphalt emulsion. Neither asphalt tack coat nor paving fabric shall be placed when weather conditions are not suitable, in the opinion of the Engineer.

F. Surface Preparation: The pavement surface shall be dry and thoroughly cleaned of all dirt and oil to the satisfaction of the Engineer. Cracks 1/8” wide or greater shall be cleaned and filled with suitable bituminous material or by a method approved by the Engineer. Crack-filling material shall be allowed to cure prior to placement of paving fabric. Potholes and other pavement distress shall be repaired. Repairs shall be performed as directed by the Engineer.

G. Tack Coat Application: The tack coat shall be applied using a calibrated distributor spray bar. Hand spraying, squeegee and brush application may be used in locations where the distributor truck cannot reach. Every effort shall be made to keep hand spraying to a minimum.

The tack coat shall be applied uniformly to the prepared, dry pavement surface. The tack coat application rate must be sufficient to saturate the fabric and to bond the fabric to the existing pavement surface. The tack coat application rate shall be 0.22 to 0.30 gallons per square yard as required by the roadway surface and environmental conditions. When using emulsions, the application rate must be increased as directed by the engineer to offset the water content of the emulsion. Within the street intersections, on steep grades or in other zones where vehicle speed changes are common, the normal application rate shall be reduced by about 20 percent as directed by the Engineer, but not less than 0.20 gallons per square yard.

The temperature of the tack coat shall be sufficiently high to permit a uniform spray pattern. For asphalt cements, the minimum temperature shall be 290° F. To avoid damage to the fabric, distributor tank temperatures shall not exceed 325° F. For asphalt emulsions, the distributor tank shall be maintained between 130° F and 160° F.

The target width of the tack coat application shall be equal to the paving fabric width plus 6”. Tack coat application shall be wide enough to cover the entire width of fabric overlaps. The tack coat shall be applied only as far as in advance of paving fabric installation as is appropriate to ensure a tacky surface at the time of paving fabric placement. Traffic shall not be allowed on the tack coat. Excess tack coat shall be cleaned from the pavement.

H. Paving Fabric Placement: The paving fabric shall be placed onto the tack coat using mechanical or manual laydown equipment capable of providing a smooth installation within a minimum amount of wrinkling or folding. The paving fabric shall be placed before the asphalt cement tack coat cools and loses its tackiness. Paving fabric shall not be installed in areas where the overlay asphalt tapers to a minimum compacted thickness of less than 1.5”.

When asphalt emulsions are used, the emulsion shall be allowed to cure properly such that essentially no water moisture remains prior to placing the paving fabric. Fabric wrinkles severe enough to cause folds shall be slit and laid flat. Brooming and/or rubber-tire rolling will be required to maximize paving fabric contact with the pavement surface. Additional hand-placed tack coat may be required at overlaps and repairs as required by the Engineer.

Turning of the paver and other vehicles shall be done gradually and kept to a minimum to avoid movement and damage to the paving fabric. Abrupt starts and stops shall also be avoided. Damaged fabric shall be removed and replaced with the same type of fabric and a tack coat.

Joints and Overlaps: At joints, fabric rolls shall overlap by 1" to 3". End joints and joints from repair of wrinkles should be made to overlap or "shingle" in the direction that the pavement overlay will be placed. Overlaps of adjacent rolls may be as great as 6" to accommodate variations between the width of the roadway and the paving fabric. Excess fabric shall be cut and removed to ensure that overlaps of adjacent rolls do not exceed 6". A uniform application of tack coat shall be applied between all fabric overlaps. Any locations that do not have tack between the overlaps shall be corrected by manual placement of tack coat prior to overlay construction.

All areas with paving fabric placed will be paved the same day. No traffic except necessary construction will be allowed to drive on the paving fabric.

I. Overlay placement: Asphalt overlay construction shall closely follow fabric placement. All areas in which paving fabric has been placed will be paved during the same day. Excess tack coat that bleeds through the paving fabric shall be removed. Excess tack coat can be removed by broadcasting hot mix or sand on the paving fabric. Excess sand or hot mix shall be removed before beginning the paving operation. In the event of rainfall on the paving fabric prior to the placement of the asphalt overlay, the paving fabric must be allowed to dry completely before asphalt is placed. Overlay asphalt thickness shall meet the requirements of the contract drawings and documents. The minimum compacted thickness of overlay asphalt shall not be less than 1.5" in areas of paving fabric installed.

TABLE 1. PHYSICAL REQUIREMENTS OF PAVING FABRICS

Petromat 4598

Properties	Test Method	American Standard	Metric Units
Mass Per Unit Area	ASTM D 3776	4.1 oz/yd^2	104 g/m^2
Tensile Strength	ASTM D 4632	101 lb.	0.450 kN
Tensile Elongation	ASTM D 4632	50%	50%

Asphalt Retention	ASTM D 6140	0.20 gal/yd^2	0.90 l/m^2
Melting Point	ASTM D 276-87	300° F	149° C
Surface Texture	VISUAL INSPECTION	Heat-Set on One Side	

END OF SECTION

SECTION 02775
SIDEWALKS, DRIVEWAYS, AND CURBS & GUTTERS

PART 1 – GENERAL

1.01 SCOPE

A. The work included in this section includes furnishing all materials, equipment, and labor necessary to construct Portland Cement Concrete curb and gutter, as shown on the construction plans.

1.02 REFERENCES

A. ACI031 – Specifications for Concrete Buildings.

B. ACI304 – Recommended Practice for Measuring, Measuring, Mixing, Transporting, and Placing Concrete.

C. ASTM A 185-94 – Steel Welded Wire Fabric, Plain, for Concrete Reinforcement.

D. ASTM A 497-94 – Steel Welded Wire Fabric, Deformed, for Concrete Reinforcement.

E. ASTM A 615-95 – Deformed and Plain Billet-Street Bars for Concrete Reinforcement.

F. ASTM C 33-93 – Concrete Aggregates.

G. ASTM C 39-94 – Compressive Strength of Cylindrical Concrete Specimens

H. ASTM C 94-94 – Ready-Mixed Concrete.

I. ASTM C 150-05 – Portland Cement

J. ASTM C 260-94 – Air – Entraining Admixtures for Concrete.

K. ASTM C 309-94 – Liquid Membrane – Forming Compounds for Curing Concrete.

L. ASTM C 494-92 – Chemical Admixtures for Concrete

M. ASTM D 1751-83 (1991) – Preformed Expansion Joint Filler for Concrete Paving and Structures Construction. (Nonextruding and Resilient Bituminous Type).

N. ASTM D 1752-84 (1992) – Performed Sponge Rubber and Cork Expansion Joint Fillers for Concrete Paving and Structural Construction.

O. ASTM D 3740-94 – Minimum Requirements for Agencies Engaged in the Testing and/or Inspection of Soil and Rock as Used in Engineering Design and Construction.

P. ASTM E 329-93 – Agencies Engaged in the Testing and/or Inspection of Materials used in construction.

1.03 REGULATORY REQUIREMENTS

A. Perform work in accordance with the Georgia Department of Transportation Standard Specifications, Current Edition.

B. Conform to applicable standards for paving work on public property.

1.04 TESTING

A. Testing laboratory shall operate in accordance to ASTM D 3740 and E 329 and shall be accepted by the Engineer.

B. The testing laboratory and Project Engineer/Project Representative shall be given a minimum of 48 hours notice prior to taking any of the tests.

C. Testing shall be the responsibility of the Contractor and shall be performed at the Contractor's expense by a commercial testing laboratory that operates in accordance with subparagraph Number 1 above.

D. The Contractor shall submit for review a design mix for "Class B" concrete proposed for use. The mix shall be prepared by an approved testing laboratory. Compressive strength of at least four (4) specimens of the design mix shall indicate 15% higher than 28 days strengths specified. During the work, the Contractor shall make 3 test cylinders for each 75 cubic yards, or fraction thereof, of concrete placed each day. One cylinder shall be tested at 7 days and the other two at 28 days in accordance with ASTM C-39. Copies of all test reports shall be furnished to the Engineer.

1.05 SUBMITTALS

A. Product Data: Provide data on joint filler, admixtures, and curing compounds.

B. Concrete Mix Design.

1.06 WEATHER CONDITIONS

A. Do not place concrete when base surface temperature is less than 40° F, or surface is wet or frozen.

PART 2 – PRODUCTS

2.01 FORM MATERIALS

A. Shall conform to ACI301.

B. Shall be wood, plywood, metal or other accepted material and shall be of the grade or type suitable to obtain the finish specified. The material should be of size and strength to resist movement during concrete placement and to retain horizontal and vertical alignment until removed. Use straight forms, free of distortion and defects.

C. Use flexible spring steel forms or laminated boards to form radius bends as required.

D. Form Ties: Removable or snap-off type, galvanized metal, adjustable length, free of defects that could leave holes larger than 1-inch in concrete surface.

E. Form Release Agent: Colorless mineral oil, which will not stain concrete, or absorb moisture, or impair natural bonding or color characteristics of coating intended for use on concrete.

2.02 REINFORCING STEEL

A. Reinforcing Steel: ASTM A 615, Grade 60 billet steel deformed bars; uncoated finish.

B. Welded Steel Wire Fabric: Plain type, ASTM A 185; uncoated finish.

C. When specifically called for on the plans, reinforcing bars shall be epoxy-coated in accordance with ASTM A775.

2.03 CONCRETE MATERIALS

A. Concrete Materials: “Class A” concrete as defined by the Standard Specifications of the Department of Transportation of Georgia.

B. Fine and Coarse Mix Aggregates: ASSTM C33.

C. Water: Potable, not detrimental to concrete

D. Air Entrainment: ASTM C260.

2.04 JOINT SEALERS

A. Joint Fillers: [ASTM D1751] Asphalt impregnated fiberboard or felt, tongue and grove profile.

B. Sealant: Joints shall be sealed per detail on project drawings. ASTM C 920-94, Type S or M, Grade P or NS, Class 25.

2.05 CONCRETE MIX-BY PERFORMANCE CRITERIA

A. Concrete mixed at the job site shall be mixed in a batch mixer in accordance with American Concrete Institution Standard A.C.I 318, and in a similar manner subject to acceptance. Ready-mixed concrete shall conform to A.S.T.M. Standard C-94. Mixing time for stationary mixers over 1 cubic yard in capacity shall be increased 15 seconds for each additional ½ cubic yard or fraction thereof materials mixed. Construction shall be in accordance with applicable portions of “Building Code Requirements for Concrete” (A.C.I. – 318).

B. Provide concrete to the following criteria:

1. Flexible Strength: 700 psi

2. Compressive Strength: 3,000 psi @ 28 days.

3. Slump: 2 to 3 inches.

4. Air Content: 4% to 8%.

C. Use accelerating admixtures in cold weather only when approved by Engineer. Use of admixtures will not relax cold weather placement requirements.

D. Use calcium chloride only approved by Engineer.

E. Use set retarding admixtures during hot weather only when approved by Engineer.

2.06 SOURCE QUALITY CONTROL AND TEST

A. All sampling and testing services shall be performed at the Contractor's expense, by a testing laboratory which operates in accordance with ASTM D 3740 and E 329 latest edition and accepted by the Engineer.

B. The Contractor shall submit for review a design mix for each class of concrete proposed for use. The mix shall be prepared by an approved testing laboratory. Compressive strength of a least four specimens of the design mix shall indicate 15% higher than 28 days strength specified. During the work, the Contractor shall make 3 test cylinders for each 30 cubic yards, or fraction thereof, of concrete placed each day. One cylinder shall be tested a 7 days and the other two at 28 days in accordance with ASTM C 39. Copies of all test reports shall be furnished to the Engineer in duplicate.

PART 3 – EXECUTION

3.01 CONSTRUCTION OBSERVATION

A. Verify compacted subgrade & granular base are acceptable and ready to support paving and imposed loads.

B. Verify gradients and elevations of base are correct.

C. The Engineer will have the right to require that any portion of the work the done in his presence and if the work is covered up after such instruction, it shall be exposed by the Contractor for observation. However, if the Contractor notifies the Engineer that such work is scheduled, and the Engineer fails to appear within 48 hours, the Contractor may proceed without him. All work done and materials furnished shall be subject to review by the Engineer or Project Representative. Improper work shall be reconstructed. All materials, which do not conform to the requirements of the specifications, shall be removed from the work upon notice being received from the Engineer for the rejection of such materials. The Engineer shall have the right to mark rejected materials so as to distinguish them as such.

3.02 SUBBASE

A. Prepare subbase in accordance with Section 300 - Standard Specifications for Base and Subbase Courses, Department of Transportation, State of Georgia, current Edition.

B. Remove loose material from compacted subbase surface immediately before placing concrete.

C. Proof-roll prepared subbase surface to check for unstable areas and need for additional compaction. Do not begin paving work until such conditions have been corrected and area is ready to receive paving.

3.03 PREPARATION FOR PLACEMENT

A. Water shall be removed from excavations before concrete is deposited. Hardened concrete debris, and other foreign materials shall be removed from the interior of forms and from the inside of mixing and conveying equipment. The reinforcement shall be made secure in position and shall be subject to examination and acceptance.

B. Moisten base to minimize absorption of water from fresh concrete.

C. Notify Engineer minimum 48 hours prior to commencement of concreting operations.

3.04 FORMING

A. Place and secure forms to correct location, dimension, profile, and gradient.

B. Assemble formwork to permit easy stripping and dismantling without damaging concrete.

C. Place joint filler in position, in straight lines. Secure to formwork during concrete placement.

D. Forms shall be constructed to the shape, form line, and grade required and shall be maintained sufficiently rigid to prevent deformation under load. Formwork and details of construction shall conform to ACI-318, Chapter 6.

E. Check completed formwork for grade and alignment to following tolerances:

Top of forms not more than 1/8” in 10’.

Vertical face on longitudinal axis, not more than ¼” in 10’.

3.05 REINFORCING

A. Place Reinforcement as indicated.

B. Interrupt reinforcement at expansion joints.

3.06 PLACING CONCRETE

A. Placing of concrete shall conform to Chapter 5 of the American Concrete Institution Standard A.C.I. 318. Concrete having attained initial set or having contained water for more than 45 minutes shall not be used in the work. Concrete shall not be dropped freely more than 3 feet. Concrete shall be mixed and placed only when the temperature is at least 40 degrees F and rising. Concrete shall be placed only upon surfaces that are free from frost, ice, mud and other detrimental circumstances. When placed on dry soil or previous materials, waterproof paper or polyethylene sheeting shall be laid over the surfaces that are to receive the concrete.

B. Ensure reinforcement, inserts, embedded parts, and formed joints are not disturbed during concrete placement.

C. Place concrete continuously over the full width of the panel and between predetermined construction joints. Do not break or interrupt successive pours such that cold joints occur.

3.07 JOINTS

A. Place expansion joints at 40 foot intervals.

B. Place joint filler between paving components and building or other appurtenances. Recess to of filler ¼ inch.

C. Provide swan joints at 3 feet intervals between sidewalks and curbs.

D. Saw cut contraction joints 3/16 inch wide at an optimum time after finishing. Cut ⅓ into depth of slab.

E. Finishing: After striking-off and consolidating concrete, smooth surface by screeding and floating. Use hand methods only where mechanical floating is not possible. Adjust floating to compact surface and produce uniform texture.

After floating, test surface for trueness with a 10’ straightedge. Distribute concrete as required to remove subsurface irregularities, and refloat areas to provide a continuous smooth finish.

3.08 FINISHING

A. Concrete Finishing: After striking-off and consolidating concrete, smooth surface by screeding and floating. Use hand methods only where mechanical floating is not possible. Adjust floating to compact surface and produce uniform texture.

B. After floating, test surface for trueness with a 10' straightedge. Distribute concrete as required to remove surface irregularities, and refloat repaired areas to provide a continuous smooth finish.

C. Work edges of gutters, back top edge of curb, and formed joints with an edging tool, and round to ¼" radius, unless otherwise indicated. Eliminate tool marks on concrete surface.

D. Do not remove forms for 24 hours after concrete has been placed. After form removal, clean ends of joints and point-up any minor honeycombed areas. Remove and replace areas or sections with major defects, as directed by Architects.

3.09 CONCRETE CURING

A. Immediately after placement and finishing, concrete shall be protected from moisture loss for not less than 7 days. For concrete surfaces not in contact with forms, white-pigmented curing compound shall be uniformly applied after water sheen disappears from the concrete surface. Formed surfaces shall receive and application of curing compound if forms are removed during the 7 day curing period. Curing compound shall not be applied during rainfall.

B. Curing compound shall be applied under pressure at the rate of 1 gallon to not more than 150 square feet by mechanical sprayers. The spraying equipment shall be of the fully atomizing type. At the time of use, the compound shall be thoroughly mixed with white pigments uniformly dispersed throughout the sprayer. Care shall be taken to prevent application to joints where concrete bond is required, to reinforcements steel and to joints where joint sealer is to be placed. The compound shall form a uniform continuous coherent firm that will not crack or peel and shall be free from pinholes and other imperfections. Concrete surfaces that are subjected to heavy rainfall within 3 hours after curing compound has been applied shall be resprayed by the above method and at the above coverage at no additional expense to the Owner.

C. No pedestrian or vehicular traffic shall be allowed over the surface for seven days unless the surface is protected by planks, plywood, or sand. The protection shall not be placed until at least 12 hours after the application of the curing compound.

D. Protect concrete by suitable methods to prevent damage by mechanical injury or excessively hot or cold temperatures.

3.10 FIELD QUALITY CONTROL

A. Three concrete cylinders will be taken every 75 cubic yards of concrete placed each day.

B. One additional test cylinder will be taken during cold weather and cured on site under same conditions as concrete it represents.

C. One slump test will be taken for each set of test cylinders taken.

D. Maintain records of placed concrete items. Record date, location of pour, quantity, air temperature, and test samples taken.

3.11 PROTECTION

A. Immediately after placement, protect pavement from premature drying, excessive hot or cold temperatures, and mechanical injury.

B. Repair or Replace broken or defective concrete, as directed by Engineer.

C. Allow testing company to drill test cores where directed by Engineer, when necessary to determine magnitude of cracks or defective areas. Fill drilled core holes in satisfactory pavement areas with portland cement concrete bonded to pavement with epoxy adhesive.

D. Protect concrete from damage until acceptance of work. Exclude traffic from pavement for at least 14 days after placement. When construction traffic is permitted, maintain pavement as clean as possible by removing surface stains and spillage of materials as they occur.

E. Sweep concrete curb and gutter and wash free of stains, discolorations, dirt, and other foreign material just prior to final inspection.

END SECTION

SECTION 02920
PERMANENT (PERENNIAL) GRASSING AND LANDSCAPING

PART 1 – GENERAL

1.01 SECTION INCLUDES

A. Preparation of ground surface; furnishing and application of lime, fertilizer, seed, and mulch to establish a stand of permanent, mowable grass on all disturbed areas; and placement of all disturbed shrubs, trees, and miscellaneous plants.

B. Seed Protection.

C. Maintenance of seeded areas until final acceptance.

1.02 RELATED SECTIONS

A. Section 02370 – Soil Erosion and Sedimentation Control

1.03 REFERENCES

A. "Standard Specifications, Construction of Roads and Bridges" Section 700 and 702;1993 Edition; published by the Georgia Department of Transportation; hereinafter referred to as the "Standard Specifications."

B. "Manual for Erosion and Sediment Control in Georgia" published by the State Soil and Water Conservation Commission of Georgia; hereinafter referred to as the "Manual". Contractor shall be responsible for the acquisition and utilization of the latest edition of the "Manual for Erosion and Sediment Control in Georgia".

1.04 SUBMITTALS

A. Contractor shall submit list of grasses, lime, fertilizer, seeding and mulching rates; and seeding dates for Engineer's review and approval prior to seeding.

1.05 DEFINITIONS

A. Final Stabilization: All soil disturbing activities at the site have been completed, and that for unpaved areas and areas not covered by permanent structures, at least 70% of the soil surface is uniformly covered in permanent vegetation or equivalent permanent stabilization measures (such as the use of rip rap, gabions, permanent mulches, or geotextiles) have been employed.

B. Land-Disturbing Activity: Any activity which may result in soil erosion from water or wind and the movement of sediments into State waters or onto lands within the State, including, but not limited to clearing, grubbing, dredging, grading, excavating, transporting, and filling.

C. Rolled Erosion Control Blanket (RECB): A temporary blanket consisting of degradable plastic netting that covers and is intertwined with a natural organic or manmade mulch; or, a jute mesh that is typically homogenous in design.

D. Soil Reinforcement Matting: A permanent non-degradable, three dimensional plastic structure which can be filled with soil prior to planting; also known as turf reinforcement matting.

PART 2 – PRODUCTS

2.01 FERTILIZER AND LIME

A. Fertilizer: Standard commercial grade grass fertilizer with a 10-10-10 (N-P-K) proportion.

B. Lime: Natural, agricultural grade, ground or pulverized dolomitic limestone.

2.02 MULCH

A. Dry straw, hay, or wood cellulose fiber of good quality, free of weeds and foreign matter detrimental to plant life.

2.03 GRASS SEED

A. All grass seed shall be certified by the Georgia Department of Agriculture.

B. All grass seed shall be in undamaged containers showing percentage of seed mix, year of production, net weight, date of packaging, and location of packaging.

C. Selected grasses shall be appropriate for the season and site as specified by the Manual.

D. Selected seed shall be equal type and grade to the previously existing grass.

E. The Engineer reserves the right to test, reject, or accept all seed before seeding.

2.04 BLANKETS AND MATTING

A. All blanket and matting materials used shall be on the Georgia Department of Transportation Qualified Products List (QPL #62 for blankets, QPL #49 for matting).

2.05 SOD

A. Sod shall be densely rooted, good quality grass, free from noxious weeds, and appropriate for the region it is to be planted.

B. The sod shall contain practically all of the dense root system and not be less than one (1) inch thick.

C. Sod shall be cut in uniform strips not less than twelve (12) inches in width and not less then twenty-four (24) inches in length.

2.06 TREES, SHRUBBERY, AND MISCELLANEOUS PLANTS

A. All trees or shrubbery damaged by the Work shall be replaced with identical plants of the same general size and quality as previously existed.

2.07 PRODUCT REVIEW

A. The Contractor shall provide the Engineer with a complete description of all products before ordering. The Engineer will review all products before they are ordered.

PART 3 – EXECUTION

3.01 GENERAL

A. All areas that are disturbed by the Work, including trenches and ungraded cleared areas, except areas to be paved, shall be provided with a full stand of permanent grass.

B. Concentrated flow areas, all slopes steeper than 2.5:1 and with a height of ten feet or greater, and cuts and fills within stream buffers, shall be stabilized with sod and/or the appropriate erosion control matting or blanket. Appropriate matting or blankets shall be specified by the Engineer on the Drawings.

C. Where sod is required to match existing conditions, the Contractor shall install sod. No separate payment will be made for sod as it will be considered a part of the final grassing bid item. Contractor will also be required to water sod until it is established.

D. **<u>Important Note</u>: The Contractor is expected to provide a full coverage of permanent grass before the project will be deemed complete. Substantial retainage will be withheld if the Contractor is not preparing seed bed, seeding, and watering throughout the project to ensure a substantial stand at project completion.**

3.02 PREPARATION

A. Remove foreign materials, plants, roots, stones, and debris from surfaces to be seeded so that they are made smooth, uniform, and conform to the adjacent ground surface.

B. Crusted soils shall be loosened to a minimum depth of 3 inches before fertilizer, lime, seed, or sod is applied.

C. Apply fertilizer uniformly at a rate of 1,500 lbs./acre (35 lbs./1000 sq. ft.) unless otherwise directed by the Engineer.

D. Apply lime uniformly at the rate of 2,000 lbs./acre (45 lbs./1000 sq. ft.) unless otherwise directed by the Engineer.

E. Thoroughly mix lime and fertilizer with the first 2 to 4 inches of the soil.

F. Roll to form a smooth, firm seedbed.

3.03 SEEDING

A. Include both temporary and permanent (perennial) grasses in all seeding of permanent grass. For additional information regarding permanent (perennial) grassing or for mixtures with temporary grassing or other perennial grasses, see Chapter 6, Section II of the Manual.

B. Apply seed evenly on freshly prepared and rolled seedbed with a cyclone seeder, drill, cultipacker seeder, or hydroseeder.

C. Certified grass seed shall be applied at the rates and dates indicated in the following table:

Species	Rate Per 1,000 Sq. Ft.	Rate Per Acre	PLANTING DATES		
			Mountains Limestone Valley	Piedmont	Coastal

Bermuda, Hulled	0.2 lb.	10 lbs.	-----	4/1 – 5/31	3/15 – 5/31
Bermuda, Unhulled	0.2 lb.	10 lbs.	-----	10/15 – 2/28	11/1 – 1/31
Bermuda, Sprigs	0.9 cu. ft.	40 cu. ft.		4/1 – 6/15	4/1 – 5/31
	Sod plugs 3 ft. x 3 ft.				
Crown Vetch	0.3 lb.	15 lbs.	9/1 – 10/15	9/1 – 10/15	-----
Fescue, Tall	1.1 lbs.	50 lbs.	3/1 – 4/1 or 8/15 – 9/30	8/15 – 10/15 or 2/15 – 4/15	-----
Sericea Lespedeza, Scarified	1.4 lbs.	60 lbs.	4/1 – 5/31	3/15 – 5/31	3/1 – 5/15
Sericea Lespedeza, Unscarified	1.7 lbs.	75 lbs.	9/21 – 2/28	9/1 – 2/28	9/1 – 2/28
Weeping Lovegrass	0.1 lb	4 lbs.	4/1 – 5/31	3/15 – 5/31	3/1 – 5/31

PLEASE NOTE: The preceding grassing schedule indicated optimal planting dates. However, this schedule may be expanded by several weeks to indicate a permissible, but marginal, planting period.

D. Cover seeds lightly with soil using a rake or cultipacker. On steep slopes, cover seeds by dragging spiked chains or other satisfactory method.

3.04 MULCHING

A. Immediately apply mulch to all seeded areas that do not require matting or blankets.

B. Apply mulch in accordance with Chapter 6, Section II of the Manual.

C. Uniformly apply mulch so as to provide a 75% soil cover.

D. Anchor all mulch. Acceptable anchoring methods include using a disk harrow, commercial tackifier, or netting with openings not exceeding the average size of the mulching material.

3.05 BLANKETS AND MATTING

A. Contractor shall install blankets or matting according to manufacturer's specifications.

3.06 SODDING

A. Sod shall be placed within 48 hours of cutting.

B. Sod shall be moist when laid and placed on moist ground. Place sod by hand, beginning at the toe of slopes and working upwards. The length of the strips shall be perpendicular to the flow of surface water. All joints shall be tightly butted and end joints shall be staggered at least 12 inches. The sod shall be immediately pressed firmly into the ground by tamping or rolling. Fill all joints between strips with fine-screened soil.

C. Anchor sod on slopes steeper than 3:1 with sod pegs or other approved method.

3.07 SHRUBBERY, TREES, AND MISCELLANEOUS PLANTS

A. Plant shrubbery and trees in accordance with written recommendations of nursery supplying the plants, including mulching, fertilizing, and watering instructions.

B. Provide an approved written guarantee from nursery for all transplanted shrubbery and trees for one year after final acceptance. Guarantee shall provide that failed plants be replaced. Guarantee shall provide for mulching, fertilizing and watering of replaced plants and shall extend the guarantee for one year from date of replacement.

3.08 WATERING

A. Apply water with fine spray immediately after each area has been sown.

B. Provide water as necessary to achieve final stabilization.

3.09 MAINTENANCE

A. Maintenance shall consist of providing protection against traffic, watering to ensure uniform seed germination and to keep surface of soil damp, and repairing any areas damaged as a result of construction operations or erosion.

B. If a poor stand of grass is present, re-seed as required to achieve final stabilization. Replace sod as needed.

C. Control erosion at all times. Where damage occurs, repair landscaping work as quickly as practicable.

D. After grass has been established, mow as often as needed to maintain height between 4 and 6 inches until final acceptance.

3.10 ACCEPTANCE

A. Prior to acceptance, the Contractor shall produce a stand of perennial grass that has fully achieved “final stabilization” as defined in the latest edition of “The Manual for Erosion and Sediment Control in Georgia” and the NPDES General Permit for Stormwater Discharges Associated with Construction Activity.

END OF SECTION

SECTION 03100
CONCRETE FORMWORK

PART 1 – GENERAL

1.01 SCOPE

A. Under this heading shall be included designing, furnishing, constructing, adjusting and maintenance of all concrete formwork required for the reinforced concrete shown on the Plans in accordance with the requirements of the Specifications.

1.02 APPLICABLE STANDARDS

A. Where any material or operation is specified by reference to the following published specifications or standards or the specifications or standards of any other organizations, the referenced specifications or standard shall be as much a part of this Section as is quoted in full herein.

1. American Concrete Institute (ACI):

a. 347 Recommended Practice for Concrete Formwork

1.03 DESIGN

A. Design of forms and formwork shall be the responsibility of the Contractor. Design shall include consideration of all dead and live loads which will be exerted on formwork during its period of use. Formwork design shall be performed using the following criteria:

B. Design Loads:

1. Vertical loads shall include the weight of formwork, the weight of freshly placed concrete and all live loads including the weight of workmen, equipment, materials, runways and impact.

2. Horizontal loading shall include but not be limited to, wind, cable tension, inclined supports, placement of concrete, and starting and stopping of equipment. Wall forms shall be designed in accordance with American National Standard A58.1, “Minimum Design Loads for buildings and Other Structures”, or those required by local building codes, whichever is greatest. Bracing for wall forms shall be designed for a minimum horizontal load of 100 pounds per linear foot of wall, applied at the top.

3. Lateral pressure of concrete containing no pozzolans or admixtures, having a slump of 4 inches or less, made with Type I cement weighing 150 pounds per cubic foor, and normal internal vibration shall be calculated on the basis of

$$p = 150\,h$$

where p is the lateral pressure in pounds per square foot and h is the height of fresh concrete above the point considered in feet. Adjustment shall be made in design of forms for concrete having characteristics different from those described above or for external vibrations of forms.

C. Safety Factors: Safety factors for formwork accessories shall be as given in Table 2.4 of ACI 347. All other components of formwork shall be designed for a safety factor of 2.0 except for those with a potential hazard to life which shall have a safety factor of 3.0.

D. Design Approval: The Contractor will not be required to submit shop drawings or design calculations for approval. However, in the event that the Engineer requests the design calculations on any part of the formwork, the Contractor shall submit such calculations for review. Such design calculations found not to be in accordance with the criteria specified herein or the failure to provide such calculations upon request from the Engineer shall be cause for all concreting operations to be suspended until design requirements are completed. Review of design calculations or the absence of review will in no respect relieve the Contractor of the responsibility for formwork design or the liability which may result from improper design or the absence thereof.

PART 2 – PRODUCTS

2.01 MATERIALS

A. Material used in formwork shall be selected by the Contractor on the basis of safety and the quality required in the finished work. All material and accessories shall be new and undamaged. New forms may be reused so long as they retain structural integrity and provide the required quality of the finished work. Form coatings sealers, and parting agents shall be used as required by the work and shall be of quality to insure proper function. Such agents shall be used in accordance with manufacturer's recommendations.

PART 3 – EXECUTION

3.01 CONSTRUCTION

A. General:

1. Forms shall be constructed and maintained so as to insure that after removal of forms the finished concrete members will have true surfaces free of offset, waviness or bulges, and will conform accurately to the indicated shapes, dimensions, lines, elevations, and positions. Form surfaces that will be in contact with concrete shall be thoroughly cleaned before each use.

2. Studs and wales shall be spaced to prevent deflection of form material. Forms and Joints shall be sufficiently tight to prevent leakage of grout and cement paste during placing of concrete. Forms shall be fitted to accurate alignment to assure smooth completed surfaces free from irregularities. Forms shall be readily removable without impact, shock, or damage to the concrete.

B. Concrete Surfaces to be Exposed: Form surfaces that will be in contact with concrete shall be of material that is non-reactive with concrete and that will produce concrete surfaces equivalent in smoothness and appearance to that produced by new 4 foot by 8 foot plywood panels, exterior type, resin-impregnated or plastic faced concrete form. Cut surfaces shall be smooth and treated with form coating. Panel joints that will be in contact with concrete shall be smooth and free of offset. Form materials with defects that will impair the texture and appearance of finish surfaces shall not be used. Form lining, if used, shall be installed over solid backing.

C. Concrete Surfaces to be Unexposed: Form surfaces that will be in contact with concrete shall be sound, tight, lumber or other material producing equivalent finish. Forms under deck slabs may be left in place.

D. Form Ties: Ties shall be factory-fabricated, removable or snap-off metal ties of design that will not allow form deflection and will not spall concrete upon removal. Solid backing shall be provided for each tie. The portion of the tie remaining in the concrete after removal of the exterior parts shall be at least 1-1/2 inches back from any surface of the concrete. Bolts and rods that are to be completely withdrawn shall be coated with a non-staining bond breaker.

E. Chamfering: External corners shall be chamfered by moldings placed in the forms unless the Plans specifically show that chamfering is to be omitted.

F. Coating: Forms shall be coated with form oil or a form-release agent before

reinforcement is placed. The coating shall be a commercial formulation of satisfactory and proven performance that will not bond with, stain, or adversely effect concrete surfaces, and surfaces to be cured with water or curing compounds. The coating shall be used as recommended in the manufacturer's printed or written instructions. Forms for unexposed surfaces, may be wet with water in lieu of coating immediately before placing concrete, except that in cold weather with probable freezing temperatures, coating shall be mandatory. Surplus coating on form surfaces and coating on reinforcing steel and construction joints shall be removed before placing concrete.

G. Removal of Forms:

1. Removal shall be in a manner to ensure complete safety of the structure after the following conditions have been met. Where the structure as a whole is supported, forms for beam sides, and similar vertical structural members may be removed after 72 hours except when curing requirements exceed this time. Supporting forms or shoring shall not be removed until structural members have acquired sufficient strength to support safely their own weight and any construction and/or storage load to which they may be subjected, but in no case shall they be removed before expiration of 7 days, nor shall forms used for curing the removed before expiration of curing period except as specified in Section 03300. Care shall be taken to avoid spalling concrete surfaces or damaging concrete edges.

2. Tie-rods to be entirely removed from the wall shall be loosened 24 hours after concrete is placed, and form ties, except for a sufficient number to hold forms in place, may be removed at that time. Ties wholly withdrawn from wall shall be pulled toward the face that will be concealed from view in the permanent work.

H. Filling of Tie-Rod or Bolt Holes: Filling of tie-rod or bolt holes is specified in Section 03300.

3.02 TOLERANCES

A. The Contractor shall set and maintain forms to insure completed work within the following tolerance limits:

1. Variations From the Plumb Columns, piers, and walls:

a. 1/4 inch in any 10 feet of length and 1 inch maximum for entire length.

2. Corner columns, control joint lines and any other conspicuous lines:

   a. 1/4 inch in any 20 feet of length and 1/2 inch maximum for entire length.

3. Variations from plan Levels or Grades Slabs, ceilings, decks, and beams:

   a. 1/4 inch in any 10 feet of length 3/8 inch in any bay or any 20 feet of length, 3/4 inch maximum for entire length.

   b. Exposed lintels, sills, parapets, horizontal grooves, and other conspicuous lines: 1/4 inch in any bay or in any 20 feet of length, 1/2 inch maximum for entire length.

B. Variation of Distances

1. Between walls, columns, partitions and beams: 1/4 inch per 10 feet of distance but not more than 1/2 inch in any one bay, and not more than 1-inch total variation.

C. Variations in Opening Sizes and Locations Sleeves, floor openings and wall openings: Minus 1/4 inch, plus 1/2 inch.

D. Variations in Cross-Sectional Dimensions and Thickness Columns, beams, slabs, decks, and walls: Minus 1/4 inch, plus 1/2 inch.

E. Variation in plan Lines:

1. Building lines, structure lines: 1 inch from established plan position.

F. Variations in Footing and Foundation Dimensions

1. Dimensions in plan: Minus 1/2 inch. Plus 2 inches (concrete only) or plus 3 inches when earth formed.

2. Misplacement or eccentricity: 2 percent of member width in the direction of misplacement but not more than 2 inches (concrete only).

3. Thickness: Minus 5 percent of specified thickness.

END OF SECTION

SECTION 03150
CONCRETE ACCESSORIES

PART 1 – GENERAL

1.01 WORK INCLUDED

A. Provide accessories for cast-in-place concrete.

1.02 RELATED WORK

A. Section 03100, Concrete Formwork

B. Section 03200, Concrete Reinforcement

C. Section 03300, Cast-In-Place Concrete

1.03 SUBMITTALS

A. Submit product data and samples in accordance with Section 01300.

B. Submit product data on the following items.

1. Water Stops
2. Tongue and Groove Joint Forms
3. Preformed Expansion Joint Fillers

C. Submit samples on the following items:

1. Water Stops
2. Precast Concrete Block Supports for Reinforcing Bars

PART 2 – PRODUCTS

2.01 MATERIALS

A. Precast Concrete Block Supports For Reinforcing Bars: Comply with ACI 315.

Provide blocks with No. 4 dowels bent 90° to support top bars.

B. Membrane: N/A.

C. Water Stops: Polyvinyl chloride meeting all requirements of U.S. Army Corps of Engineer's Specification CRD-C-572 and equal to Burke Water Stops as manufactured by The Burke Company. Provide flat dumbbell type and center bulb type, 9 inches x 3/8-inch at wall thickness of 12-inches or greater, and 6-inches x 3/8-inch at wall thickness less than 12-inches. Provide 6-inch split-ribbed with center bulb type at connections of new concrete structures with existing concrete. Provide water stops as indicated on the Drawings.

D. Preformed Expansion Joint Filler:

1. Bituminous type conforming to the requirements of ASTM D 994.

2. Nonextruding type, self-expanding cork, ¾-inch thick or as otherwise shown on the Drawings, conforming to the requirements of ASTM D1752, Type III, and compatible with the specified joint sealant compound.

E. Joint Sealant: N/A.

F. Tongue And Groove Joint Forms: 24 gauge steel forms complete with steel stakes and splice plates, designed for joints not to receive a poured seal, and equal to Burke Keyed Kold Joint as manufactured by The Burke Company.

G. Inserts: Galvanized steel to fit the proposed hanger or support.

PART 3 – EXECUTION

3.01 INSTALLATION

A. Precast Concrete Block Supports For Reinforcing Bars: Provide in sufficient quantity to support reinforcing bars in slabs formed on earth at a spacing not to exceed 4-feet on centers in both directions. Provide blocks with dowels to support top bars. Block supports are not required in slabs formed on tremie concrete, but may be used at the Contractor's option. Blocks are not required for reinforcing bars properly supported from formwork. At other locations, refer to ACI 315 and CRSI MSP-1.

B. Membrane: N/A.

C. Water Stops:

1. Installation: Protect water stops from dirt, oil and concrete spatter and rigidly secure in position by means of split bulkheads and by fastening to reinforcing bars in two directions at not more than 12 inches on centers. Install water stops in construction joints in hydraulic structures required to contain liquid or to resist the entry of groundwater.

2. Splices: Butt-splice water stops using a thermostatically controlled electric splicing iron as recommended by the manufacturer.

D. Expansion Joints: Provide expansion joints of size and at locations as shown on the Drawings. Place expansion joint fillers every 30 feet in straight runs of walkways, at right angle turns and wherever concrete butts into vertical surfaces, unless otherwise shown on the Drawings.

E. Joint Sealants: N/A.

END OF SECTION

SECTION 03200
CONCRETE REINFORCEMENT

PART 1 – GENERAL

1.01 SCOPE

A. Under this heading shall be included the furnishing, fabricating, delivering and placing of reinforcement steel for all concrete work.

1.02 APPLICABLE STANDARDS

A. Where any material or operation is specified by reference to the following published specifications or standards or the specifications or standards of any other organizations, the referenced specification or standard shall be as much a part of this Section as if quoted in full herein.

B. American Concrete Institute (ACI).

1. 315 Manual for Standard Practice for Detailing Reinforced Concrete Structures

2. 318 Building Code Requirements for Reinforced Concrete

C. American Society for Testing and Materials (ASTM).

1. A82 Cold Drawn Steel Wire for Concrete Reinforcement

2. A90 Test for Weight of Coating of Zinc-Coated (Galvanized) Iron or Steel Articles

3. A123 Zinc (Hot-Galvanized) Coatings on Products Fabricated from Rolled, Pressed and Forged Steel Shapes, Plates, Bars and Strips

4. A 143 Safeguarding Against Embrittlement of Hot-Dip Galvanized Structural Steel Products and Procedures for Detecting Embrittlement

5. A185 Welded Steel Wire Fabric for Concrete Reinforcement

6. A497 Welded Deformed Steel Wire Fabric for Concrete Reinforcement

7. A615 Deformed and Plain Billet-Steel Bars for Concrete Reinforcement

8. A616 Rail-Steel Deformed and Plain Bars for Concrete Reinforcement

9. A617 Axle-Steel Deformed and Plain Steel Bars for Concrete Reinforcement

10. A706 Low-Alloy Steel Deformed Bars for Concrete Reinforcement

D. American Welding Society (AWS)
1. D1.1-82 Structural Welding Code

E. Concrete Reinforcing Steel Institute (CRSI)

1. MSP Manual of Standard Practice

1.03 SHIPPING AND STORAGE

A. Shipping

1. Reinforcement steel shall be handled and shipped in a manner to avoid bending or other damage to the bars.

2. Bars shall be bundled, preferably for one placement, in accordance with the placement schedule and as follows:

3. Do not bundle bars for separate buildings or large structures together. Bars for small structures may be bundled together but each bar or group of bars which have the same piece mark shall be tagged and coded.

4. Metal tags or approved equal shall be provided labeled with legible marks.

5. All bundles shall be tagged at each end. Tags shall show piece marks corresponding to the mark numbers on the placement Drawings and on the bar list.

6. Bars shall be bundled in the largest size practical for handling and shipping.

B. Storage

1. Reinforcement steel shall be stored above ground on platforms, skids or other approved supports. Contact with the soil should be avoided. Proper drainage and protection from the elements shall be provided to minimize corrosion.

2. Welding electrodes shall be stored in a moisture controlled environment

in accordance with AWS and/or the manufacturer's recommendations.

PART 2 – PRODUCTS

2.01 MATERIALS

A. General: Only new material shall be furnished, and shall be free of loose rust, mill scale, deleterious amounts of salts or coatings which reduces or destroys bond. Tight rust and mill scale or surface irregularities will be acceptable, provided the weight and the dimensions, including height of deformations and tensile properties of a test specimen which has been wire-brushed by hand, are not less than those required by the Applicable Codes and Standards.

B. Metal Reinforcement:

1. Reinforcement shall be deformed reinforcement conforming to ASTM A615, A616, A617, or A706, Grade 60, except Grade 40 bars are acceptable when shown on the Contract Plans for the following:

2. Rebars less than #4 diameter.

3. Rebars used as stirrups or ties.

C. Bar Supports and Accessories: Bar supports and accessories shall be galvanized or plastic coated wire conforming with the requirement of ACI 315, Chapter 7, and/or CRSI MSP, and shall be specifically made for the intended use by proprietary manufacturers.

D. Mechanical Connection and/or Anchorage Devices: Mechanical anchorage devices hall be in accordance with ACI 318, Chapter 12.

E. Welding Electrodes: Welding electrodes shall be in accordance with AWS D12.1.

PART 3 – EXECUTION

3.01 FABRICATION

A. Reinforcement steel shall be accurately bent, cut or formed to the dimensions and configurations shown on the Plans and within the tolerances specified in CRSI MSP or, ACI 315, Chapter 4.

B. Reinforcement steel shall be bent cold using pin sizes in accordance with ACI 318.

Bars may be preheated only if approved by the Engineer. Also, reinforcement shall not be rebent or straightened without approval by the Engineer.

C. Reinforcement steel having a reduced section, kinks, visible transverse cracks at bends, or otherwise damaged in any way shall not be used.

D. The ends of bars which are to be welded or mechanically connected for splices shall be saw cut only.

E. Spiral reinforcement shall be accurately fabricated to the diameter and pitch shown on the Plans. One and one-half finishing turns shall be provided at both the top and bottom, unless shown otherwise on the Plans.

F. Reinforcement bars shall not be welded, unless specifically shown on the Plans All the steel reinforcement specifications, except for ASTM A706, shall be supplemented to require a report of material properties necessary to conform to welding procedures specified in AWS D12.1.

3.02 PLACEMENT

A. Reinforcement shall be placed in accordance with the Plans.

B. Only reinforcement that is free of oil, dirt, loose mortar, mud or other non-metallic coatings which reduce bonding capacity shall be installed. After placing, the reinforcement shall be maintained in a clean condition until the concrete is placed.

C. All intersections of the reinforcement shall be securely tied with 16-gauge minimum, black annealed wire. Crossing bars shall not be tack welded.

D. Reinforcement supports shall be as specified and shall be supported on non-corrodible metal or plastic-encased spacers, bolsters or chairs. For concrete placement on grade, reinforcement may be supported on precast concrete blocks spaced to maintain required cover, but only where the Contractor can demonstrate that the precast blocks are at least equal in quality to the class concrete specified for the work.

E. Bars that are partially embedded in concrete shall not be field bent unless concurrence has been obtained from the Engineer. Procedure used shall be based on the Contractor's report and recommendations.

3.03 CONCRETE PROTECTION FOR REINFORCEMENT

A. Cast-in Place Concrete (non-prestressed): Unless shown otherwise on the Plans, the following minimum concrete cover shall be provided for reinforcement:

		Minimum Cover, Inches
1.	Concrete cast against or permanently exposed to earth:	3”
2.	Formed Concrete exposed to earth, water and weather	2”
3.	#6 and larger bars	2”
4.	All #5 and smaller bars	1-1/2”

* The maximum cover shall be no greater than that specified above or shown plus 3/8 inch, except as qualified below. Not to exceed 3 3

3.04 SPLICING

A. Reinforcing Bars: Splices shall be as shown on the Plans or the reviewed placement drawings. When welding is required, comply with Article 3.04 (B) and (C).

B. Welded and Mechanical Connections: A full welded or mechanical splice connection shall develop, in tension or compression, as required, at least 125 percent of the specified yield strength “f_y” of the bar.

C. Welding: Welding shall be performed in accordance with AWS D12.1.

D. Spirals: Splices in spiral reinforcement shall be lap splices of 48 diameter length, but not less than 12 inches, or welded.

3.05 SHOP DRAWINGS

A. Before starting construction operations under this section, detail and placing drawings shall be submitted and approved for the following in conformance with Section 01300, Submittals.

B. Reinforcement details showing sizes and grades of steel, bending and splicing details, splice locations, placement drawings, concrete protection for steel reinforcement, and accessories including position of reinforcement.

END OF SECTION

SECTION 03300
CAST-IN-PLACE CONCRETE

PART 1 – GENERAL

1.01 SCOPE

A. Under this heading shall be included the furnishing of all labor, materials and equipment, tools and energy necessary to accomplish the cast-in-place concrete work to be constructed under this Contract, as shown on the Plans and hereinafter specified.

1.02 RELATED WORK

A. Section 03100 – Concrete Formwork

B. Section 03150 – Concrete Accessories

C. Section 03200 – Concrete Reinforcement

1.03 APPLICABLE STANDARDS

A. Where any material or operation is specified by reference to the following published specifications or standard or the specifications or standards of any other organizations, the referenced specification or standard shall be as much a part of this Section as if quoted in full herein.

B. American Concrete Institute (ACI).

1. 214 Recommended Practice for Evaluation of Compression Test results in Field Concrete.

2. 301 Suggested Specifications for Structural Concrete Buildings.

3. 305 Hot Weather Concreting

4. 306 Cold Weather Concreting

5. 315 Manual for Standard Practice for Detailing Reinforced Concrete Structures

6. 318 Building code Requirements

7. 347 Recommended Practice for Concrete Formwork

8. 350 Concrete for Sanitary Engineering Structures

9. 605 Recommended Practice for Hot Weather Concreting

10. 613 Recommended Practice for Cold Weather Concreting

11. 614 Recommended Practice for Measuring, Mixing and Placing Concrete

B. American Society for Testing and Materials (ASTM).

1. A36 Specification for Structural Steel

2. A185 Welded Steel F Fabric for Concrete Reinforcement

3. A615 Deformed and plain Billet-Steel Bars for Concrete Reinforcement

4. C31 Making and Curing Concrete Compression and Flexural Test Specimens in the Field

5. C33 Concrete Aggregates

6. C39 Test for Compressive Strength of Cylindrical Concrete Specimens

7. C42 Obtaining and Testing Drilled Cores and Sawed Beams of Concrete

8. C78 Test for Flexural Strength of Concrete

9. C94 Ready-Mix Concrete

10. C138 Test for Unit Weight, Yield and Air Content (Gravimetric) of Concrete

11. C143 Test for Slump of Portland Cement Concrete

12. C150 Portland Cement

13. C171 Sheet Materials for Curing Concrete

14. C172 Sampling Fresh Concrete

15. C192 Making and Curing Concrete Test Specimens in the Laboratory

16. C231 Air Content of Freshly Mixed Concrete by the Pressure Method

17. C260 Air-Entraining Admixture for Concrete

18. C470 Single Use Molds for Forming 6 x 12 Inch Test Cylinders

19. C494 Chemical Admixtures for Concrete

1.04 QUALITY ASSURANCE

A. The actual acceptance of aggregates and development of mix proportions to produce concrete conforming to the specific requirements shall be determined prior to the placement of any concrete, by means of laboratory tests made with the constituents to be used on the work.

B. Plant Qualification: Comply with all requirements of the Check List for Certification of Ready Mix Concrete production Facilities of the National Ready Mixed Concrete Association and ASTM C 94.

C. Worker Qualifications: Workers with at least 5 years experience in performing concrete work of high quality, including forming, color, texture and finishing and of the size and complexity of this project.

D. Testing:

1. Provide testing in accordance with the following and Section 3.08 of this specification. Keep the laboratory informed of testing schedule.

2. Obtain standard laboratory compressive test cylinders as required by the laboratory when concrete is discharged from the mixer at the point of placing. Test cylinders will be made and cured by the laboratory in accordance with the requirements of ASTM C 31, including a set of 6 cylinders for each 50 cubic yards or fraction thereof placed each day, for each type of concrete. The cylinders will be cured under laboratory conditions and will be tested in two groups of three at 7 and 28 days of age, respectively in accordance with the requirements of ASTM C 39.

3. Air entrainment tests will be made by the laboratory when concrete is discharged from the mixer at the point of placing, for each pour or other volume of concrete for which a set of test cylinders is required in accordance with the previous paragraph. The amount of air entrained will be determined

by either the pressure method or the volumetric method in accordance with ASTM C231 or ASTM C173, respectively.

4. The laboratory will make slump tests of Class A and Class B concrete as it is discharged from the mixer at the point of placing. Slump tests will be made of every batch of concrete placed, and failure to meet specified slump requirements will be sufficient cause for rejection of that batch. Water cannot be added to the batch after the slump tests are made.

E. Evaluation And Acceptance of Concrete: Evaluation and acceptance of concrete will be in accordance with ACI-318. Chapter 5.

F. When high-early-strength portland cement is premilled, the same strength requirements shall apply except that the indicated strengths shall be attained at seven (7) days instead of twenty-eight (28) days.

G. If, during the progress of the work, it is impossible to secure concrete of the required workability and strength with the materials being furnished, the Engineer may order such changes in proportions or materials, or both, as may be necessary to secure the desired properties. All changes so ordered shall be made at the Contractor's expense.

H. If, during the progress of the work, the Contractor desires to use materials other than those originally approved, or if the materials from the sources originally approved change in characteristics, the Contractor shall, at his own expense, have to make new acceptance tests of aggregates and establishment of new basic mixtures and submit them to the Engineer for review.

I. Under special circumstances, the Engineer may allow minor deviations from the material requirements specified, provided the resulting concrete quality is not adversely affected or provided a suitable adjustment in cement content is made to compensate for such deviations without cost to the Owner.

1.05 SUBMITTALS

A. Submit the following information in accordance with Section 01300.

1. Plant Qualification: Submit satisfactory evidence indicating compliance with the specified qualification requirements.

2. Materials: Submit satisfactory evidence indicating that materials to be used, including cement, aggregates and admixtures meet the specified requirements.

3. Design Mix: Submit the design mix to be used as prepared by qualified persons. The design of the mix is the responsibility of the Contractor subject to the limitations of the Specifications.

4. Submit, at least 24 hours before placing concrete, signed certification providing the following:

   a. Exact location and portion of structure to be placed.

   b. Date and time concrete is to be placed.

   c. Type of concrete to be used (mix), and the method to be used in placing the concrete.

   d. Estimated quantity of concrete to be placed.

   e. That line and grade have been checked and grade properly compacted and tested.

   f. That location, type, size and spacing of reinforcement has been checked and conform to the Drawings.

   g. That any water stops, construction joints, or seals have been placed and conform to the Drawings.

   h. That any embedded pipes have been placed, are the correct size and type and conform to the Drawings.

   i. That any embedded conduits, grounding wires or receptacles have been placed and conform to the Drawings.

   j. That any embedded anchor bolts, bearing plates, dowels etc. are in place, are of the correct size and are located as indicated on the Drawings.

   k. That forms are properly located and adequately braced.

1.06 TESTS

A. All sampling and testing services shall be performed by a testing agency which operates in accordance to ASTM D 3740 and E 329 latest revision and accepted by the Engineer, at the Contractor's expense.

B. The Contractor shall submit to the Engineer, for review, the concrete materials and the concrete mix designs for each class of concrete proposed for use. This submittal shall include the results of all testing performed to qualify the materials and establish the mix designs. All mix designs shall be proportioned in accordance with Section 3.9 of ACI 301, Method 1 (trial batches) or method 2 (field experience). The average strength used as the basis for selecting proportions shall be specified in paragraph 3.9.2 or ACI 301.

C. The testing laboratory shall conduct strength tests of the concrete during construction in accordance with Section 16.3.4 of ACI 301. At least one strength test (6 test cylinders) shall be made for reach 50 cubic yards or fraction thereof, of each mix design of concrete placed in any 1 day.

D. Slump tests shall be conducted regularly during construction in accordance with Section 16.3.5 or ACI 301.

E. The air content of the concrete sample for each strength test shall be determined in accordance with Section 16.3.6 of ACI 301.

F. Results of all tests shall be submitted to the Engineer, with copies to the Contractor. The test reports shall include the exact location in the work at which the batch represented by a test was deposited.

G. Evaluation of test results and acceptance of concrete shall be in accordance with chapter 17 of ACI 301.

H. Conformity of aggregates to these Specifications, and the actual proportions of cement, aggregates, and water necessary to produce concrete conforming to the requirements set forth in Table A, shall be determined by tests made with representative samples of the materials to be used on the work. Tests will be made by an accredited testing laboratory selected by the Contractor and approved by the Engineer in accordance with Section 01410.

I. Cement may be subject to testing to determine that it conforms to the requirements of this Specification. Methods of testing shall conform to the appropriate specification, but the place, time, frequency, and method of sampling will be determined by the Engineer in accordance with the particular need.

J. Samples of fine and coarse aggregates shall be delivered to the laboratory for examination and testing at least three weeks before the Contractor proposes to use them in the work.

K. Concrete shall be proportioned to provide an average compressive strength in accordance with ACI 318 part 3, Section 4.3, to establish a standard deviation test records. Where a concrete production facility does not have test records meeting these requirements the test required average compressive strength shall be as shown on Table D.

1.07 JOB CONDITIONS

A. Severe Weather Concreting: Unless protection is provided and/or approval is obtained, concrete shall not be placed during rain, sleet or snow; rain water shall not be allowed to increase mixing water or to damage surface finish.

B. Cold Weather:

1. Heat concrete materials and protect concrete during freezing or near-

freezing weather.

2. No frozen materials, or materials containing ice shall be used.
3. Concrete materials and reinforcement, forms, fillers and ground with which concrete is to come in contact shall be free from frost or ice.
4. Whenever temperature of surrounding air is below 40 degrees F., concrete placed in forms shall have temperature between 70 degrees F. and 80 degrees F. and means shall be provided for maintaining temperature of not less than 70 degrees F. for 3 days or 50 degrees F. for 5 days or for as much more time as is necessary to insure concrete curing.
5. Salt, calcium chloride or other chemicals for prevention of freezing shall not be used.
6. Housing, covering or other protection used in connection with curing shall remain in place and intact for at least 24 hours after artificial heat is discontinued.
7. Follow recommendations of ACI 306 “cold weather concreting”.

C. Hot Weather

1. Lower temperature of concrete ingredients so that temperature of concrete when placed does not exceed 90 degrees F., or when weather is such as to raise concrete temperature as placed consistently above 80 degrees F. use admixture conforming with ASTM C 494/C 494M-99ae1, Type “D”.
2. Sprinkle subgrade and forms with water before placing concrete.
3. Curing shall start as soon as practicable to prevent evaporation of water; and forms shall be kept wet. Protect flat work from dry winds, direct sun and high temperatures.
4. Follow recommendations of ACI 305 “hot weather concreting”.

PART 2 – PRODUCTS

2.01 MATERIALS

A. Cement:

1. Domestic Portland cement conforming to the requirements of ASTM C 150, Type II domestic manufacture, one brand only. Construct sanitary sewer manholes, wet wells, pump stations and structures exposed to sewage with Type II cement only.
2. Use only one brand of cement in any individual structure unless otherwise

approved by the Engineer. Do not use cement which has become damaged, partially set, lumpy or caked and discard the entire contents of the sack or container which contains such cement. Do not use salvaged or reclaimed cement.

B. Aggregates:

1. ASTM C 33. Coarse aggregates shall be size No. 67, ¾-inch to No. 4 or No. 57, 1-inch to No. 4, as shown on the Drawings, unless otherwise directed by the Engineer. Use size No. 8 for filling of cells of masonry units.

2. In addition to requirements of ASTM C 33, apply the following criteria for structures exposed to sewage:

a. Soft particles: Not more than 2.0 percent.

b. Chert as a soft impurity (defined in Table 3 of ASTM C 33): Not more than 1.0 percent.

c. Total of soft particles and chert as a soft impurity: not more than 2.0 percent.

d. Flat and elongated particles (long dimension more than 5 times short dimension): Not more than 15.0 percent.

C. Water: Potable quality, clean and free from injurious amounts of deleterious materials.

D. Air Entraining Admixture: ASTM C 260.

E. Water Reducing and Retarding Admixture.

1. Concrete Without Superplasticizer:

a. Water Reducing Admixtures: ASTM C494 Type A, equal to Eucon WR-75 by the Euclid Company, pozzolith 200N by Master Builders, Plastocrete 161 by Sika Chemical Corporation, and containing no calcium chloride.

b. Water Reducing and Retarding Admixtures: ASTM C494 Type D, equal to Eucon Retarder-75 by the Euclid Company, Pozzolith 100 XR by Master Builders, Plastiment by Sika Chemical Corporation, and containing no calcium chloride.

C. Accelerating Admixtures: ASTM C494 Type C or E, equal to Accelguard 80 by the Euclid Company, Darex Set Accelerator by W.R. Grace, and containing no calcium chloride.

2. Concrete With Superplasticizer:

a. Water Reducing, High Range Admixtures: ASTM C494, Type F or G, equal to Eucon 37 by the Euclid Company, Rheobild 716 by Master Builders, Daracem 100 by W.R. Grace, Sikament by Sika Chemical

Corporation, and consisting of a second-generation admixture, free of chlorides and alkalis (except for those attributable to water) composed of a synthesized sulfonated complex polymer, enabling the concrete to maintain its rheoplastic state in excess of two hours if necessary.

b. Manufacturer's Job Site Representation: Provide the services of a competent field service representative from the manufacturer of each of the admixtures selected for use to provide at the job site advice and consultation on the use of the admixture materials, including the effect on the concrete in place, including recommending maximum discharge time for superplasticizer method and procedure to induce superplasticizer into mixer, quantities of admixtures to be used if variations are required because of temperature/humidity, wind, or other environmental considerations, and to be available on short call at any time requested by the Owner, Contractor, or concrete producer.

F. Curing Compound: ASTM C 309, Type I and Type ID, Class A and Class B, containing no ingredient which would adversely affect the bond of coatings or toppings.

1. For exposed concrete not to receive special finishes, protective coatings and/or concrete toppings, provide curing and sealing compound equal to Super Rez-Seal, by Euclid Chemical Co., or Burke Spartan-Cote Cure-Seal Hardener by The Burke Company.

2. For exposed concrete to receive special finishes, Coatings shall be utilized according to the drawings.

G. Mortar for Repair of Concrete: Same materials as used for concrete, except omit coarse aggregate and use not more than one part cement to two and one-half parts sand by damp loose volume. Use no more mixing water than is necessary for handling and placing.

H. Burlap Mats: Conform to AASHTO Specification M182.

I. Epoxy Bonding Agent: Euco #452, BurkEpoxy MV, Sikadur Hi Mod, Concresive 1001-LPL, or equal.

J. Powdered Epoxy Coating For Anchor Bolts: Powdered epoxy resin as manufactured by the 3M Company, Scothkote No. 213, Armstrong No. R349, or equal.

2.02 MIXES

A. General Requirements:

1. Mix Design: Conform to ACI 318, Section 5.3. Submit data on consecutive tests and standard deviation.

2. Maximum Water-Cement Ratio:
.37 (lbs/lb) - Concrete with superplasticizer
.45 (lbs/lb) - Class A concrete without superplasticizer

3. Air Content: 5 percent plus or minus 1.5 percent.

4. Slump: 2 -3 inches plus or minus 1-inch

5. Minimum Compressive Strength at 28 days:

4,000 psi

B. Production of Concrete:

1. General: use ready mixed concrete, batched, mixed and tranported in accordance with ASTM C 94, unless otherwise indicated.

2. Air Entraining Admixture: Add admixture into the mixture as a solution measured by means of an approved mechanical dispensing device, and as part of the total mixing water.

3. Water Reducing and Retarding Admixture: Measure and add water reducing and retarding admixture as recommended by the manufacturer. Complete the addition of the admixture within one minute after addition of water to the cement has been completed, or prior to the beginning of the last three-quarters of the required mixing, whichever occurs first. Store, handle and batch admixtures in accordance with the recommendations of ACI 68.

C. Delivery Tickets: Conform to ASTM C94, including cement content and water/cement ratio. Furnish ticket for each batch of ready-mixed concrete delivered to the site.

D. Temperatures: Deliver concrete to site at temperature not higher than 90° F,

otherwise, add ice to reduce the temperature, as recommended by ACI.

D. Modifications to The Mix: Do not make modifications to the mix in the plant or on the job which will decrease the cement content or increase the water-cement ratio beyond that specified.

PART 3 – EXECUTION

3.01 PREPARATION

A. Preparations Before Placing: Place no concrete until the approval of the Engineer has been received. Ensure that forms are thoroughly clean and reinforcing and all other items required to be set in concrete have been placed and thoroughly secured. Notify Engineer 24 hours before concrete is placed.

B. Conveying:

1. General: Transport concrete from the truck to the place of final deposit as rapidly as practicable by methods which will prevent segregation or loss of ingredients to maintain the quality of the concrete. Place no concrete more than 90 minutes after mixing has begun for that batch.

2. Buckets and Hoppers: Provide buckets and hoppers having discharge gates with a clear opening equal to no less than one-third of the maximum interior horizontal area or five times the maximum aggregate size being used, and having side slopes no less than 60 degrees. Provide controls on gates to permit opening and closing during the discharge cycle.

3. Runways: Provide runways as specified in Section 03100. Use extreme care to avoid displacement of reinforcement during the placing of concrete.

4. Elephant Trunks: Use hoppers and elephant trunks to prevent the free fall of concrete for more than 6-feet.

5. Chutes: Provide metal or metal lined chutes having a slope not exceeding one vertical to two horizontal and not less than one vertical to three horizontal. Use chutes more than 20-feet long and chutes not meeting the slope requirements only if they discharge into a hopper before distribution.

6. Pumping Equipment: If required, provide pumping equipment and

procedures conforming to ACI 304.2R, placing Concrete by pumping Methods. Measure slump at the point of discharge. Do not allow loss of slump in pumping to exceed 1 ½-inches.

7. Conveying Equipment Construction: Do not use aluminum or aluminum alloy pipe for tremies or pump lines and chutes, except for short lengths at the truck mixer.

8. Cleaning: Clean conveying equipment at the end of each concrete operation.

3.02 MIXING

A. Concrete shall be ready-mixed, or transit-mixed, as produced by equipment acceptable to the Engineer. No hand mixing will be permitted. Adding water in controlled amounts during the mixing cycle shall be done only with the express approval of, and under the direction of, the Engineer.

B. Ready-mix or transit-mixed concrete shall be transported to the site in watertight agitator or mixer trucks loaded not in excess of rated capacities for the respective conditions as stated on the nameplate. Discharge at the site shall be within 1-1/2 hours and within one hour when ambient temperature is above 85 degree F after cement was first introduced into the mix. Central mixed concrete shall be plant-mixed a minimum of 1-1/2 minutes per batch and then shall be truck-mixed or agitated a minimum of 8 minutes. Agitation shall begin immediately after the pre-mixed concrete is placed in the truck and shall continue without interruption until discharge. Transit-mixed concrete shall be mixed at mixing speed for at least 10 minutes immediately after charging the truck, following by agitation without interruption until discharged.

C. All central plant and rolling stock equipment and methods shall conform to ACI 304, ASTM C 94, and the latest Truck Mixer and Agitator Standards of the Truck Mixer Manufacturers' Bureau of the National Ready-Mixed Concrete Association.

D. The re-tempering of concrete or mortar which has partially hardened, that is, mixing with or without additional cement, aggregate, or water, will not be permitted.

E. Attention is called to the importance of dispatching trucks from the batching plant so that they shall arrive at the site of the work just before the concrete is required, thus avoiding excessive mixing of concrete while waiting or delays in placing successive layers of concrete in the forms.

F. Deliver to the Engineer at the time of each truckload transported to the site a mix ticket, showing at least the following: concrete plant identification, date, quantity of ingredients (including water) added at the batch plant, time of charge, and truck number.

3.03 INSPECTION AND CONTROL

A. The preparation of forms, placing of reinforcing steel, conduits, pipes, and sleeves, batching, mixing, transportation, placing, curing, and testing of concrete shall be at all times under the inspection of the Engineer.

B. The Contractor shall engage the services of an accredited testing laboratory approved by the Engineer in accordance with Section 01340 to establish the basic mixtures of concrete as required by the specifications, to test field control cylinder specimens, and to conduct other tests as specified herein or as deemed required by the Engineer to insure the quality of concrete as specified. All tests shall be performed in accordance with the applicable ASTM standard methods.

3.04 APPLICATION

A. Placing:

1. General: Deposit concrete continuously, or in layers of such thickness (not exceeding 2-feet in depth) that no concrete will be deposited on concrete that has hardened sufficiently to cause the formation of seams or planes of weakness. Repair any such seams or planes of weakness with injected epoxy grout and patch to match adjacent surfaces.

2. Supported Elements: Allow at least two hours to elapse after depositing concrete in columns or walls before depositing in beams, girders, or slabs supported thereon.

3. Segregation: Deposit concrete as nearly as practical in its final position to avoid segregation due to rehandling or flowing. Do not subject the concrete to procedures which cause segregation.

4. Concrete Under Water: Place all concrete in the dry except for Tremie concrete.

B. Consolidating Concrete:

1. General: Consolidate concrete by means of internal vibrators operated by competent workmen.

2. Vibrators: Use vibrators having a minimum head diameter of at least 2-

inches, a minimum centrifugal force of 700-pounds and a minimum frequency of 8,000 vibrations per second.

3. Vibrators for Confined Areas: In confined areas, use additional vibrators having a minimum head diameter of 1 ½-inches, a minimum centrifugal force of 300-pounds and a minimum frequency of 9,000 vibrations per second.

4. Spare Vibrator: Keep one spare vibrator for each three in use on the site during all concrete placing operations.

5. Use of Vibrators: Insert and withdraw vibrators at points approximately 18-inches apart. At each insertion operate vibrator for 5 to 15 seconds. Do not transport concrete in the forms by means of vibrators.

C. Protection: Do not allow rainwater to increase the mixing water or to damage the surface finish. Protect concrete from construction overloads and do not apply design loads until the specified strength has been attained.

D. Construction Joints: Except as otherwise indicated on the Drawings, provide horizontal construction joints at top of foundation members and slabs on grade and at the soffit of supported slabs and beams. Locate other horizontal and vertical construction joints as indicated on the Drawings. Except in the locations shown, provide no other joints, unless otherwise recommended by the Contractor and approved by the Engineer.

E. Bonding: Before depositing new concrete on or against concrete that has set, thoroughly clean the surfaces of the set concrete to expose the coarse aggregate and to ensure they are free of laitance, coatings, foreign matter and loose particles. Retighten forms. Dampen, but do not saturate hardened concrete of joints and then thoroughly cover with a coat of cement grout of similar proportions to the mortar in the concrete. Place the grout as thick as possible on vertical surfaces and at least ½-inch thick on horizontal surfaces. Place the fresh concrete before the grout has attained its initial set.

F. Embedded Items: In addition to steel reinforcement, securely place pipes, inserts and other metal objects as shown, specified or ordered to be built into, set in or attached to the concrete. Take all necessary precautions to prevent these objects from being displaced, broken or deformed. Before concrete is placed, take care to determine that all embedded parts are firmly and securely fastened in place as indicated. Thoroughly clean surfaces free from paint and other coating, rust, scale, oil, and any foreign matter. Pressure test embedded pipes for leakage, as specified elsewhere, before concrete is placed. Wrap metal rainwater leaders,

firelines and other such piping with at least two thicknesses of 30 lb. Roofing felt before placing concrete. Do not embed wood in concrete. Pack concrete tightly around pipes and other metal work to prevent leakage and to secure perfect adhesion. Adequately protect drains from intrusion of concrete.

G. Bonding To Existing Surfaces: Clean existing concrete surfaces that are to have new concrete bonded thereto of all grease, oil, dust, dirt and loose particles and coat with an epozy bonding agent just prior to placing of the new concrete. Apply the bonding agent as recommended by the manufacturer and allow the agent to become tacky before the new concrete is placed. Do not allow the bonding agent to overlap or be spilled on the surfaces to be exposed after the work is completed.

3.05 FORM REMOVAL

A. Maintain formwork in place for the following structural conditions until the concrete has attained the minimum percentage of indicated design compressive strength or for the period of time specified in the following table.

Note: time periods in the table include all days except those in which the temperature falls below 40 degrees F.

Structural Member or **Condition**	Normal Strength **Concrete**	Normal High-Early Strength **Concrete**	Minimum Compressive Strength for Form Removal (% Design Strength)
Floor slabs	5 days	3 days	70

3.06 CONCRETE FINISHING

A. Repair of Surface Defects:

1. General: Repair surface defects, including tie holes immediately after form removal. Dampen the area to be patched and an area at least 6-inches wide surrounding it to prevent absorption of water from the patching mortar. Notify the Engineer prior to commencing operations.

2. Removal of Defective Concrete: Remove all honeycombed and other defective concrete down to sound concrete. Cut edges perpendicular to the surface or slightly under cut. Sand blast surfaces to receive repair.

3. Bonding Grout: Thoroughly dampen surfaces to be patched and apply a coat of bonding grout consisting of one part cement to one part fine sand passing a No. 30 sieve and having the consistency of thick cream.

4. Placing Patching Mortar: After the bonding grout begins to lose its water sheen, apply a premixed patching mortar, thoroughly consolidating it into place and striking it off so as to leave the patch slightly higher than the surrounding surface. Leave mortar undisturbed for one hour to permit initial shrinkage and then finally finish.

5. Tie Holes: After being cleaned and thoroughly dampened, fill the tie holes solid with patching mortar.

B. Concrete Finishes:

1. Formed Surfaces: After removal of forms, chip off all irregular projections, grind flush with adjacent surfaces and finish concrete surfaces in accordance with the following schedule:

Finish Designation	**Area Applied**
F-1	Exterior walls below grade not exposed to water: Repair defective concrete, fill depressions deeper than ½-inch, and fill tie holes.
F-2	Exterior and interior walls exposed to water: Repair defective concrete, remove fins, fill depressions ¼-inch or deeper, and fill tie holes.
F-3	Walls of structures of buildings exposed to view and underside of formed floors or slabs: In addition to Finish F-2, fill depressions and airholes with mortar. Dampen surfaces and then spread a slurry consisting of one part cement and one and one-half parts sand by

damp loose volume on the surface with clean burlap pads or sponge rubber floats. Remove any surplus by scraping and then rubbing with clean burlap.

F-4 Tops of walls, beams and similar unformed surfaces occurring adjacent to formed surfaces: Strike smooth after concrete is placed and float to a texture reasonably consistent with that of formed surfaces.

2. Slab Surfaces:

a. General: After concrete has been consolidated, finish all concrete slabs with a floated finish. After floating, trowel finish all concrete slabs, except for areas to receive roofing, insulation, tile or topping, and immediately light broom finish. Where a finish is not indicated, provide a troweled finish.

c. Light Broomed Finish: After floating, power trowel slabs to receive a light broomed finish to produce a smooth surface, relatively free of defects. Before the surface sets, pass a soft broom drag over the surface to produce a surface uniform in texture and appearance.

f. Saw Cut Joints: cut joints that are to be saw cut not sooner than 2 hours after the concrete is poured and not later than 8 hours after the pour.

3.07 PROTECTING

A. Curing:

1. Immediately after surface defects have been repaired, apply a spray coat of curing compound to all exposed surfaces, including slabs, walls, beams and columns in accordance with the manufacturer's recommendations. Protect exposed steel keyways and other embedded items from the curing compound. Water cure, as specified in paragraph B hereunder, all concrete surfaces that are to be coated with a coal tar epoxy system, and concrete floors requiring a bond for special finishes.

2. Do not apply curing compound during periods of rainfall. Should the film become damaged from any cause within the required curing period, immediately repair the damaged portions with additional compound. Upon removal of forms, immediately coat

the newly exposed surfaces to provide a curing treatment equal to that provided for the surface.

3. Curing and Sealing Compound: Use clear compound conforming to Federal Specification TT-C-800A, 30% solids content minimum, having test data from an independent laboratory indicating a maximum moisture loss of 0.030 grams per sq. cm. when applied at a coverage rate of 300 sq. ft. per gallon, and equal to Super Floor Coat or Super Pliocure by The Euclid Chemical Company or Masterseal 66 by master Builders. Furnish manufacturer's certification as required.

4. Apply specified clear curing and sealing compound to all horizontal areas so noted on the Drawings or in the Specifications. Apply immediately after final finishing. Apply this compound to non-structural construction joints of slabs on grade to act as a bond breaker prior to placement of adjacent concrete.

B. Water Curing Method: Cure all concrete that is to be water cured by either the wet burlap method, by continuous fogging or by covering with waterproof sheet.

1. Wet Burlap Method: Cover concrete surface with a double thickness of burlap, cotton mats, or other approved material, kept thoroughly saturated with water. Keep the forms wet until removed and upon removal, start the curing specified herein immediately. Cure the concrete for a period of 7 days for normal Portland cement or 4 days for high early strength cement. Do not submerge concrete poured in the dry until it has attained sufficient strength to adequately sustain the stress involved and do not subject it to flowing water across its surface until it has cured 4 days.

2. Continuous Fogging: Perform continuous fogging by fogging with a nozzle which so atomizes the flow of water that a mist, and not a spray, if formed. Fog the concrete surface regularly without allowing any part of the surface to become dry. Take all necessary precautions to prevent erosion of the concrete surface by the water.

3. Covering With Waterproof Sheet: Keep the entire area to be cured continuously wet by fogging, as specified in the fogging paragraph above, for at least 18 hours and then immediately cover with waterproofing curing sheet conforming to ASTM C171, waterproof paper and polyethylene film, free of holes or tears. Keep sheet fully

flat, without wrinkles or air bubbles, held down tautly at all edges. Do not use this method on slabs which will be exposed to view.

C. Hot Weather Curing: Curing for hot weather concreting shall be limited to moist curing methods. All exposed concrete and all forms shall be covered with burlap or carpet mats, wetted before placing, and overlapped at least 6 inches. Fog sprays shall be used during finishing operations and until the burlap or carpet mats are placed. Protective mats shall remain in place in a wet condition for 7 days. Protective mats shall remain in place for an additional 3 days without the application of water to permit gradual drying of the concrete surfaces. Forms may be removed after 3 days of moist during provided that protective mats, in a wet condition, are replaced so as to cover all exposed concrete.

3.08 FIELD TESTS

A. Sets of six field control cylinder specimens shall be taken for every fifty (50) cubic yards of concrete placed. During cold weather concreting, one additional test cylinder shall be taken and cured on the job site under the same conditions as the concrete it represents. Not less than one set of specimens shall be taken on any one day when concrete is being placed. One slump test shall be performed for each set of test cylinders taken and for each concrete mixer truck load deliver. All specimens shall be taken in conformance with ASTM C31. When average ultimate 28-day strength of control cylinders in any set falls below the required ultimate strength or below proportional minimum 7-day strengths where proper relation between 7 and 28-day strengths have been established by tests, proportions, water content, or temperature conditions shall be changed to secure the required strength.

B. The Contractor shall cooperate in the making of such tests to the extent of allowing free access to the work for the selection of samples, providing heated (when required) moist storage facilities for specimens, affording protection to the specimens against injury or loss through his operations, and furnishing material and labor required for the purpose of taking concrete cylinder samples, curing boxes, and shipping boxes.

C. Air entrainment shall be measured by the testing laboratory at time of concrete deposit in accordance with ASTM C231.

3.09 HYDROSTATIC TESTING

A. Hydrostatic testing of cast-in-place concrete structures shall be in accordance with ACI 350.1/350.1R-7 Tightness Testing of Environmental

Concrete Structures. The testing criteria shall be HST-NML, no measurable loss.

B. Water for testing concrete structures shall be potable and be provided by the Contractor at his cost for the test of each structure.

C. Contractor shall be responsible for providing all pumps, equipment, and temporary piping or hoses for filling basins to be tested and for transfer of the testing water for re-use in testing other basins. Contractor shall coordinate hydrostatic and process equipment testing to minimize the volume of water needed for testing.

3.10 DAMAGE TO THE WORK

A. The requirements of these Specifications are to be considered the minimum with respect to strength, placement, finishing and curing. The Contractor shall extend the requirements of the Specifications as necessary to provide finished work free of defects. Defective work, including low strength, cracked concrete, surface irregularities, exceeding of tolerances, or any other defects which are caused by the Contractor's operations or construction methods shall be removed and replaced at no additional cost to the Owner.

END OF SECTION

SECTION 03480
PRECAST STRUCTURES

PART 1 - GENERAL

1.01 SECTION INCLUDES

A. Rectangular, monolithic, or sectional precast water and wastewater structures, pipe connectors, and accessories.

1.02 REFERENCES

A. Prestressed Concrete Institute: Manual for Quality Control for Plants and Production of Precast and Prestressed Concrete Products.

B. National Precast Concrete Association: Quality Control Manual for Precast Concrete Plants.

C. American Society for Testing and Materials:

1. ASTM C478 - Standard Specification for Precast Reinforced Concrete Manhole Sections.
2. ASTM C890 - Standard Practice for Minimum Structural Design Loading for Monolithic or Sectional Precast Concrete Water and Wastewater Structures.
3. ASTM C891 - Standard Practice for Installation of Underground Precast Concrete Utility Structures.
4. ASTM C923 - Standard Specification for Resilient Connectors Between Reinforced Concrete Manhole Structures, Pipes and Laterals.
5. ASTM C913 - Standard Specifications for Precast Concrete Water and Wastewater Structures.

D. American Association of State Highway and Transportation Officials Standard Specification for Joints for Circular Concrete Sewer and Culvert Pipe Using Flexible Watertight Gaskets (AASHTO M198).

E. American Concrete Institute Building Code Requirements for Reinforced Concrete (ACI 318).

F. Occupational Safety and Health Administration Standard 1926.704 – Requirements for Precast Concrete.

1.03 SUBMITTALS

A. Schedule of precast concrete structure sections to be provided on the project, charting the following:

1. Sheet number where the precast structure plan & profile is shown on the plans.
2. Line number (when there is more than one line on the project).
3. Precast Structure Station number.
4. Invert Elevation of the influent and effluent line as indicated on the plans.
5. Top Elevation of the precast structure frame as indicated on the plans.
6. Top elevation of precast structure base slab as calculated.
7. Total height of precast structure required from top of base slab to top of frame.
8. Total height of assembled base, risers and cone or top provided from top of base to top of top.
9. Manufacturer's Part No. or Catalogue No. and number required of each base, riser, and top provided for the precast structure.
10. Each Pipe size and type and its Connector's, Part No., distance from top of base slab, and horizontal distances from inner wall corners of precast structure.

B. Detail of each precast concrete structure to be provided, sealed by the Registered Professional Engineer employed by the manufacturer showing or charting the following:

    1. Manufacturer's Part No. or Catalogue No.
    2. Inside Dimensions
    3. Lay Length excluding base slab
    4. Wall thickness and base or top thickness where applicable
    5. Handling Weight
    6. Wire Size, Spacing and area provided per vertical foot
    7. Reinforcing Bar size and spacing
    8. Design loads
    9. Concrete Mix No. and design strength
    10. Height, width, slope and annular space of the tongue and groove

C. Pipe Connector Details and Material Specifications

D. Joint Material Detail, Material Specifications and calculations showing that the joint material cross section is greater than the joint's annular space times its height.

E. Lifting Device and Hole Detail.

F. At the request of the Engineer or Owner, submit the following:

    1. Structural analysis and design calculations for Precast Components, performed in accordance with applicable codes and standards, showing that allowable stresses will not be exceeded. All calculations must be sealed by a Registered Professional Engineer employed by the Precast Concrete Manufacturer.
    2. Calculations or test results verifying that the lifting device components and holes are designed in accordance with OSHA Standard 1926.704.

3. Concrete 28-day compression strength results for every day production of Precast Components for the project was performed, showing the required strength according to the guidelines established in ACI 318.
4. Reinforcing and Cement mill reports for materials used in the manufacture of Precast Components for this project.
5. The above test reports for similar Precast Components recently produced, submitted prior to production of Precast Components for this project.

1.04 QUALIFICATIONS

A. The Precast Manufacturer shall comply with one of the following requirements:

1. Manufacture Precast components for the project in a plant certified in the Prestressed Concrete Institute's (PCI) Plant Certification Program.
2. Manufacture Precast Components for the project in a plant certified in the National Precast Concrete Association's (NPCA) Plant Certification Program.
3. Retain an independent testing or consulting engineering firm approved by the Engineer for Precast plant inspection. The basis for plant inspection shall be the National Precast Concrete Association Quality Control Manual or the Manual for Quality Control for Plants and Production of Precast and Prestressed Concrete Products. The above firm shall inspect the precast plant 2 weeks prior to and at 1-week intervals during production of materials for this project and issue a report, certified by a Registered Engineer that materials, methods, products, and quality control meet the requirements of the above quality control manuals.

B. The Precast Manufacturer shall have a recognized Quality Improvement Process installed at the manufacturing facility.

C. The Precast Manufacturer shall employ at least one Registered Professional Engineer at the manufacturing facility throughout the life of the project.

D. All concrete compressive strength testing shall be performed in a laboratory inspected by the CCRL of the National Bureau of Standards.

1.05 ENVIRONMENTAL REQUIREMENTS

A. Maintain materials and surrounding air temperature to minimum 50 degrees F prior to, during, and 48 hours after completion of masonry, grouting, or concreting work.

1.06 DEFINITIONS

A. Wet wells shall be watertight, precast reinforced air-entrained concrete structures.

B. Lift Station wet well shall be designed to ASTM C890 A8 live loading.

C. Honeycombed or retempered concrete is not permitted.

D. Precast manufacturer shall coordinate with manufacturer of access hatches to provide the required hatch opening dimensions and ensure proper reinforcing is obtained between and around hatch openings to provide the specified design loading requirements.

PART 2 - PRODUCTS

2.01 MATERIALS

A. Concrete: Concrete shall conform to ASTM C913 and as follows:

1. Compressive strength: 5000 psi minimum at 28 days
2. Air Content: 4 percent minimum.
3. Alkalinity: Adequate to provide a Life Factor, Az = Calcium Carbonate Equivalent times Cover over Reinforcement, no less than 0.35 for bases, risers and tops.
4. Cementitious Materials: Minimum of 564 pounds per CY.
5. Coarse Aggregates: ASTM C33. Sound, Crushed, Angular Granitic Stone only. Smooth or rounded stone shall not be used.
6. Fine Aggregates: ASTM C33. Free from organic impurities.
7. Chemical Admixtures: ASTM C494. Calcium Chloride or admixtures containing calcium chloride shall not be used.
8. Air Entraining admixtures: ASTM C260.

B. Reinforcing: Reinforcing steel shall be ASTM A615 grade 60 deformed bar, ASTM A82 wire or ASTM A185 welded wire fabric.

C. Lifting Loops: Lift loops shall be ASTM A416 steel strand. Lifting loops made from deformed bars shall not be allowed.

D. Butyl Rubber Sealant shall conform to Federal Specification SS-S-210A, AASHTO M-198, Type B - Butyl Rubber and as follows: maximum of 1% volatile matter and suitable for application temperatures between 10 and 100 degrees F.

E. Butyl Rubber with Bentonite Sealant shall conform to Federal Specification SS-S-210A, ASTM D-297, and containing no asphaltics as follows: maintaining 99% solids with a maximum of 1% volatile matter and suitable for application temperatures between 5 and 125 degrees F.

F. Epoxy Gels: Epoxy Gels used for interior patching of wall penetrations shall be a 2-component, solvent-free, moisture-insensitive, high modulus, high-strength, structural epoxy paste adhesive meeting ASTM C-881, Type I and II, Grade 3, Class B and C, Epoxy Resin Adhesive.

2.02 COMPONENTS

A. Precast Component Fabrication and Manufacture shall be as described in this paragraph and as described in the paragraphs for the specific components.

1. Precast Manufacturing: Precast Structures shall be manufactured in conformance with ASTM C913. Wall and inside slab finishes resulting from casting against forms standard for the industry shall be acceptable, except form ties through the wall of the product are not allowed. Exterior slab surfaces shall have a float finish. Small surface holes, normal color variations, normal form joint marks, and minor depressions, chips and spalls will be tolerated. Edges may be tooled. Dimensional tolerances shall be those set forth in the appropriate References and specified below.

2. Joints: Joints surfaces for joints between Precast Structure Components shall be keyways or tongue and grooves manufactured to the joint surface design and tolerance requirements of ASTM C913.

3. Lift Inserts and Holes: If used for handling Precast Structures, lift holes and inserts shall be sized for a precision fit with the lift devices, shall not penetrate through the precast structure wall, and shall comply with OSHA Standard 1926.704.

B. Precast Base Sections: Base sections shall have the base slab cast monolithically with the walls or have an approved galvanized or PVC waterstop cast in the cold joint between the base slab and the walls.

C. Precast Riser Sections: The Minimum Lay Length of Precast Riser Sections shall be 36".

D. Precast Top Sections: Flat Slab Top Sections shall meet or exceed the design loading requirements of the respective structures as specified in paragraph 1.03, B.8 above. Transition Top Sections shall provide for transition to other diameter risers, cones, and flat slab top sections with a joint equal to that of a riser section. Venting of top sections shall be as shown on the details.

E. Pipe to Manhole Connectors: Pipe to Manhole Connectors shall conform to ASTM C923. On large diameter flexible pipes, provisions for control of the pipe OD to within the tolerances of the connector shall be made.

F. Joint Sealing Materials: Joints shall be sealed internally between the tongue and the groove and additionally around the external perimeter of the joint. Sealants are as follows:

1. External Seals shall consist of a cross-linked, high-density polyethylene membrane, Riser-Wrap™ or equal, no less than 1/16" thick and 6" wide applied per the manufacturer’s instructions to the outside perimeter of the

joint.

2. Joints with a perimeter greater than or equal to 18' shall be internally sealed with Butyl Rubber/Bentonite Sealant.
3. Joints with a perimeter less than 18' shall be internally sealed with Butyl Rubber Sealant.

G. Hatches: Hatches and doors, frames, and grate to be provided as equal to those shown on the precast structure details. Material shall be stainless steel or aluminum as conforming to details per application. For dimensions of castings see precast top details. Hatches shall have a load capacity of 300 psf minimum. Hatches shall be provided by Halliday Products, Inc., WACO Products, Inc., or USF Fabrication, Inc.

H. Lifting Devices: Lifting devices complying with OSHA Standard 1926.704 for handling the Precast Components shall be provided by the Precast Manufacturer. The design of lifting devices shall comply with ASTM C913, paragraph 5.8 standards.

I. Liners: Where shown on the plans, the interior of the precast structure shall be lined with an epoxy system (TNEMEC Company epoxy system or approved equal). The liner shall be installed in accordance with the recommendations of the liner manufacturer.

1. Epoxy system: TNEMEC Company epoxy system; Equal products may be submitted that do not change the generic description, solids by volume and the number of coats. ASTM performance criteria must accompany the submittal and all test reports submitted must meet and exceed the basis of design.

   Surface Preparation – Allow new concrete to dry for 28 days. Verify dryness by testing for moisture. Moisture content should not exceed 3 lbs. per 1,000 sq. ft. Abrasive sweep blast to a CSP 5 minimum. Prior to painting the substrate must be clean, dry, and free of all contaminants.

   1st Coat – Tnemec Series 218 applied at a full skim coat at 1/16” on average
   2nd Coat – Tnemec Series 436 applied at 80 mils

   The product shall have a material warranty period of 5 years against penetration of hydrogen sulfide gas and sulfuric acids.

J. Ladders: If shown on Precast Structure Details, fixed ladders shall be provided in rectangular structures greater than 8' deep in accordance with all OSHA requirements. Ladders are not required for rectangular structures 8' deep and less.

2.03 CONFIGURATION

A. Precast Concrete Structures are to be constructed as specified.

B. The number of joints is to be minimized. Use no more than 2 sections up to 8' depth and no more than 1 additional section for each 4' of depth.

PART 3 – EXECUTION

3.01 EXAMINATION

A. Inspect precast components prior to unloading from the delivery truck.

3.02 PREPARATION

A. Product Delivery, Storage, and Handling: Coordinate delivery with the manufacturer, handle and store the Precast Components in accordance with ASTM D891 and the manufacturer's recommendations using methods that will prevent damage to the components and their joint surfaces.

3.03 PLACING PRECAST CONCRETE SECTIONS

A. Excavate to the required depth and remove materials that are unstable or unsuitable for a good foundation. Prepare a level, compacted foundation extending 6" beyond the precast base and follow ASTM C891 excavation standards.

B. Set base plumb and level, aligning pipe opening with pipe invert.

C. Thoroughly clean bells and spigots to remove dirt and other foreign materials that may prevent sealing. Unroll the Butyl Sealant rope directly against base of spigot. Leave prospective wrapper attached until sealant is entirely unrolled against spigot. Do not stretch. Overlap from side to side - not top to bottom.

D. Set risers and tops, aligning internal wall surfaces, so that proper alignment is achieved, taking particular care to clean, prepare and seal joints.

E. When recommended by the manufacturer, fill the void between horizontal joint surfaces with a sand cement grout around the outside perimeter.

F. After joining precast sections, apply the butyl sealant sheet around the outside perimeter of the joint.

G. Lift Holes leaving less than 2" of wall thickness shall be plugged from the outside using a sand cement mortar. Lift Holes penetrating the wall shall be additionally sealed with an interior application of an epoxy gel 1/8" thick extending 2" beyond the penetration.

H. Perform the final finishing to the precast interior by filling all chips or fractures greater than 1/2" in length, width or depth and depressions more than 1/2" deep in inverts with a sand cement mortar. Grout joints according to Manufacturers Specifications. Clean the interior of the precast structure, removing all dirt, spills,

or other foreign matter.

END OF SECTION

SECTION 11200
WATER DISTRIBUTION SYSTEM

A. SCOPE

Under this heading shall be included installation of the water distribution system as shown on the plans and as specified herein. The Contractor shall comply with all local codes and regulations of local utilities. He shall coordinate work necessary for the completion of utilities with local utility companies and cooperate with the companies as required.

B. PIPING MATERIALS

Except where specifically noted on the Plans, the following types of NSF approved pipe shall be used:

1. Ductile Iron Pressure Pipe
   Ductile Iron pipe shall be manufactured according to ANSI/AWWA C151/A21.51 and shall be Class 350 minimum.

   a) Lining for ductile iron pipe and fittings shall be a cement mortar lining meeting the ANSI/AWWA C104/A21.4 for standard thickness lining. After cement lining, the interior of the pipe shall be given a coat of approved bituminous material in accordance with ANSI/AWWA C104/A21.4.

   b) Exterior coating shall be an approved bituminous coating one mil thick unless otherwise shown and/or specified.

   c) Rubber gasket joints shall conform to ANSI/AWWA C110/A21.11, push-on type, unless otherwise shown on the plans.

   d) Piping shall be manufactured by U.S. Pipe & Foundry Co., American Cast Iron Pipe Co., or McWane Corporation.

   e) All DIP to be wrapped with AWWA C105 polyethylene encasement (polywrap).

   f) To be installed per AWWA C600.

2. Ductile Iron Fittings
   a) Fittings for pipe 6” in diameter or larger shall conform to ANSI/AWWA C111/A21.11 and shall be rated for working pressure of not less than 250 psi.

   b) Fittings shall be cement lined in accordance with ANSI/AWWA C104/A21.4.

   c) Fittings shall be furnished with a bituminous outside coating.

d) Fittings shall be mechanical joint unless otherwise specified in the plans.

e) Fittings shall be provided by pipe manufacturer.

3. Retainer Glands

a) Retainer glands for connection to existing water lines shall be Megalug type as manufacturer by EBAA iron or approved equal.

b) Retainer glands shall be rated at a working pressure of 250 psi, minimum.

4. PVC Pipe
   a) All PVC pipe shall have integral belled ends for push-on type jointing and shall conform to AWWA C 900.

   b) Unless shown otherwise on the job specific drawings, pipe shall have a Standard Dimension Ratio (SDR) of 21 and shall be capable of withstanding a working pressure of 200 PSI.

   c) Pipe shall be supplied in minimum lengths of twenty (20) feet.

   d) All fittings shall be ductile iron meeting the requirements of AWWA C110 or AWWA C153 with a minimum working pressure of 250 PSI. Fittings shall be furnished with bituminous outside coating. Special adapters shall be provided as recommended by the manufacturer to adapt the PVC pipe to mechanical jointing with cast or ductile iron fittings or valves.

   e) Each piece of pipe shall be stamped “NSF Approved”.

   f) Installation to conform to AWWA C605.

5. HDPE Pipe
   a) HDPE Pipe 2” and smaller shall be manufactured according to AWWA C901 and ASTM D 3035 in a plant capable of providing continuous quality control through inspection. Pipe shall be DR 9 unless otherwise specified on the plans and shall contain no recycled compounds other than resin of the same specification from the manufacturer’s own plant and same raw material.

   b) HDPE Pipe 3” and larger shall be manufactured according to AWWA C906 and ASTM F 714 in a plant capable of providing continuous quality control through inspection. Pipe shall be DR 11 (DIPS) unless otherwise specified on the plans and shall contain no recycled compounds other than resin of the same specification from the manufacturer’s own plant and same raw material. Pipe shall be

manufactured from PE 4710 high-density polyethylene resin meeting ASTM D3350 with cell classification PE445574C.

c) Fittings shall conform to requirements of AWWA C901 for sizes 1/2" to 2" and to AWWA C906 for sizes 3"-54".

d) Polyethylene pipe and fittings shall be made from resin meeting the requirements of the Plastic Pipe Institute as PE 3608 and the requirements of ASTM D 3350. Butt fusion fittings shall have a manufacturing standard of ASTM D 3261. Molded and fabricated fittings shall have a pressure rating equal to that of the pipe. All fittings shall be suitable for use as pressure conduits and have a nominal burst value of three and one-half times the working pressure rating of the fitting.

e) Pipe and fittings shall be joined using butt fusion. The butt fusion procedures shall be in accordance with the manufacturer. The fusion equipment operator shall receive training using the recommended procedure. The contractor shall be responsible for verifying that the fusion equipment is in proper operating condition and that the operator has been properly training within the past 12 months. The fusion equipment will be equipped with a datalogger. Records of the welds shall be maintained for five (5) years. Fusion beads shall not be removed.

f) HDPE pipe and fittings shall be provided by one common manufacturer.

g) Pipe and fittings shall be manufactured by ISCO, JM Eagle, or approved equal.

h) Installation of HDPE pipe to conform to AWWA C906.

6. Copper Pipe

a) Water main service piping material for services 1" and smaller shall be Type K soft copper conforming to ASTM B-88. Couplings for tubing shall have compression connections.

b) Soldered joints used anywhere in the installation shall utilized "lead free" solder and flux containing not more than 0.2% lead.

C. WATER SYSTEM APPURTENANCES

1. Gate Valves
   a) Gate Valves shall be located as shown on the plans.

   b) All valves shall be NSF/ANSI 61 certified and constructed from materials conforming to AWWA C509.

c) All valves shall be taken from one manufacturer and similar sizes shall have interchangeable parts.

d) Gate Valves 3” to 12” in size shall be resilient-seated with a non-rising stem.

e) Valves shall be provided with a 2” square operating nut and shall be right hand closed valves.

f) All internal and external surfaces shall be coated with epoxy to a minimum thickness of 8 mils and meeting the requirements of ANSI/AWWA C550. Valve disks shall be coated with a rubber material conforming to AWWA C509 so that there shall be no metal-to-metal contact when the valve is in the fully closed position.

g) Gate valves shall be designed for a working pressure of not less than 150 psig and shall take full pressure on either face. Valves shall by hydrostatically tested in accordance with AWWA C509.

h) Valves shall be manufactured by Mueller Co., American-Darling Corp., or M & H Valve.

2. Check Valves

a) Check valves shall be non-slam, swing check valves by Surgebuster or pre-approved equal, with AWWA C508 ductile-iron body, 200-psi minimum working pressure, fusion-bonded epoxy interior and exterior coating (AWWA C550), stainless-steel/bronze internals, and a short-stroke, disc-accelerator mechanism designed to prevent slam and minimize water hammer. Valves shall have a full-access cover, flanged ends per ANSI B16.1 Class 125/250, and a resilient seat compatible with potable water (EPDM or nitrile). The valve shall fully close before reverse flow develops and shall be factory hydrostatically tested per AWWA requirements.

3. Butterfly Valves

a) Butterfly valves shall conform to AWWA C504 or C516 as indicated, with a ductile-iron body, stainless-steel shaft, and resilient-seated disc suitable for potable water service. Valves shall have fusion-bonded epoxy coating inside and out per AWWA C550, be rated for a minimum working pressure of 150–200 psi, and be furnished with flanged, mechanical-joint, or wafer/lug ends as shown on the plans. Discs shall be rubber-seated or bonded for bubble-tight shutoff in both directions, and operators shall be gear-operated (buried or above-grade) with position indicators and mechanical stops. All valves shall be NSF/ANSI 61 certified,

factory hydrostatically tested per AWWA requirements and manufactured by DeZurik or pre-approved equal.

4. Hydrants
   a) Fire hydrants shall be manufactured in accordance with the requirements of AWWA C502 for 200 PSI working pressure. The main valve seat opening shall be not less than 4-1/2 inches. The hydrant shall be equipped with one 4-1/2" steamer nozzle and two 2-1/2" hose nozzles. Nozzle caps shall be chained to the hydrant.

   b) Hydrants shall be compression type, left opening, closing with line pressure. The direction of opening shall be cast into the head of the hydrant.

   c) The design shall be for a dry barrel, non-freeze hydrant with an automatic drain mechanism upon valve closure.

   d) Operating nut shall be a 1-1/2" pentagon along with hose and pumper nozzle operating nuts.

   e) Hydrants shall be equipped with a breakaway feature at the ground line which allows the above ground section to be broken off in an accident without damage to the main valve, which shall remain closed. Depth of bury shall match the depth of the water main installation so that the breakaway flanges are at or near the ground level.

   f) Fire hydrants shall be Mueller Super Centurion 250, or M&H Model 129. Hydrant paint color shall be per the Owner's standard.

5. Tapping Sleeves and Valves

   a) Tapping sleeves shall be manufactured from ductile iron or stainless steel. They shall be flanged face and drilled per ANSI B16.1, with a standard tapping flange.

   b) Tapping sleeve shall meet minimum working pressure requirements of 200 psi.

   c) All tapping sleeves shall include a test plug. Tapping sleeves are to be water pressure tested for leaks through the test plug prior to tapping. The test shall be held for a period of not less than 30 minutes at 200 psi or as directed by the Engineer or Field inspector.

   d) Tapping valves shall have a mechanical joint end connection with a tapping flange. The flanged end shall have a raised face to match tapping sleeve outlet.

   e) All taps shall be "wet" taps.

6. Corporation Stops

    a) A Corporation stop shall be provided at each tapped point required for 3/4" – 1" water services.

    b) Corporation stops shall be manufactured and tested to ANSI/AWWA C800 Standards. They shall be ball type with compression connection.

    c) Corporation stops may be manufactured by Mueller, Ford, or approved equal and shall be suitable for the type of pipe being tapped.

7. Curb Stops
    a) Curb stops shall be manufactured and tested to ANSI/AWWA C800 standard.

    b) Curb stop shall be ball type blow-off with compression connection and shall be provided with a meter swivel.

    c) Curb stops shall be manufactured by Mueller, Ford, or approved equal.

8. Air Release Valves
    a) Air Release valves shall be dual operation valves to allow air to escape when the pipeline is being filled and allow air to enter when the pipeline is being emptied.

    b) The valves shall be in full accordance with AWWA C512 with a 200 psi minimum working pressure.

    c) Valves less than 3" in size shall have threaded inlet connections and valves 4" and larger shall have flanged inlets.

    d) All installations shall include an isolation valve and union to allow for removal and maintenance while the main is in service.

    e) Air Release Valves may be manufactured by Crispin, DeZurik/APCO, GA Industries, or approved equal.

9. Wet Valve Insertion
    a) Provide materials and equipment for installation of a permanent valve in an existing main with no interruption of flow or reduction of line pressure. The assembly shall be capable of forming a pressure-tight seal around the exterior of the pipe in which flow is to be sealed.

    b) The installation shall be sufficient for line pressures up to 150 psi, minimum.

c) The resulting valve shall be a resilient seated gate valve or wedge valve with a square operating nut for future use.

d) The valve body and pipe mounting body shall be constructed of ductile iron or stainless steel.

e) The valve shall have a resilient rubber seal around the gate or wedge that is capable of expanding to the inside diameter of the pipe.

f) The valve must be provided with ports for pressure testing of the pipe mounting body prior to cutting operations for installation of the valve.

g) Wet Valves shall be manufactured by Hydra-Stop (Insta-Valve), Advanced Valve Technologies (EZ Valve), or approved equal.

10. Couplings/Sleeves
    a) Couplings and/or sleeves shall be utilized to provide straight, transition or reducing connection of pipes of the same or different materials. The coupling or sleeve shall be utilized when connecting new mains to existing piping in the system or to join differing pipe materials utilized in new construction.

    b) The coupling or sleeve shall be approved for working pressures up to 150 psi, minimum and shall utilize a mechanical connection to prevent separation of the joint. The coupling or sleeve shall be recommended by the manufacturer for the pipe materials to be joined.

    c) Coupling bodies shall be fabricated from steel, ductile iron, or stainless steel and shall utilize an epoxy coating.

    d) Stiffener rings may be required for joining of HDPE piping – follow manufacturer recommendations.

    e) Couplings and/or sleeve may be manufactured by Romac Industries, JCM Industries or equal.

11. Meter Boxes
    a) Meter boxes and lids for 1” and 3/4” services shall be cast iron, approximately 20 inches long, 10-1/2 inches wide, and 16 inches deep. Alternatively, meter boxes may be oval heavy-duty plastic with cast iron lid.

    b) Meter boxes for 2” and greater services shall be constructed of cast iron or concrete with a cast iron lid or metal hatch. They shall be of sufficient size and depth to accommodate the meter for which they are intended.

12. Detection Tape

a) Detection tape shall be provided for non-metallic piping installed by open cut installation. The tape shall be installed 6 inches below the ground surface for the entire length of the trench.

b) Detection tape shall be 2 inches wide, of blue color, and have imprinted on the tape "Caution - Water Line Below." The tape shall be a printed foil warning tape encased in Mylar and shall be easily detected by electronic pipe locators.

13. Tracer Wire

a) Tracer Wire will be provided on all pipe installed. The wire shall be wrapped around the pipe or taped to the pipe at a minimum of 8’ intervals.

b) Tracer Wire shall be #12 copper or copper clad steel with HDPE or HMWPE jacket. The wire shall be blue to indicate Potable Water. No THHN will be allowed.

c) The contractor shall utilize a tracer wire approved for directional drilling use and shall follow the manufacturer’s recommendations for installation.

d) Splicing of wire shall be completed with moisture displacement connectors appropriate for use with the wire purchased.

e) Each section of tracer wire installed shall be successfully tested prior to contract completion.

D. SHOP DRAWINGS

Shop drawings shall be submitted on each manufactured item supplied under this Section along with other information as specified herein.

E. INSTALLATION

1. General

a) Pipe, fittings, valves, hydrants, and other accessories shall, unless otherwise directed, be unloaded at the point of delivery, hauled to and distributed at the site of the project by the Contractor. They shall at all times be handled with care to avoid damage. In loading and unloading, they shall be lifted by hoists or slid or rolled on skidways in such a manner as to avoid shock. Under no circumstances shall they be dropped. Pipe handled on skidways must not be skidded or rolled against pipe already on the ground. In distributing the material at the site of the work, each piece shall be unloaded opposite or near the place where it is to be laid in the trench. Coated pipe shall be handled in such a manner to minimize damage of the coating. Damaged coating shall be repaired.

b) Pipe shall be placed on the site of work parallel with the trench alignment and with bell ends facing the direction in which the work will proceed, unless otherwise directed. The interior of all pipe, fittings, and other accessories shall be kept free from dirt and foreign matter at all times. Valves and hydrants before installation shall be drained and stored in a manner that will protect them from damage by freezing.

c) Cutting pipe for inserting fittings, or closure pieces, shall be done in a neat and workmanlike manner without damage to the pipe.

d) Wherever necessary to deflect the pipe from straight line, whether in the vertical or horizontal plane to avoid obstruction, the degree of deflection shall not exceed the manufacturer's recommended maximum deflection.

e) No pipe shall be laid in water or when the trench condition or the weather is unsuitable for such work. Installation shall be in accordance with manufacturer's instructions.

f) All pipe and fittings shall be carefully lowered into the trench piece by piece by means of derrick, ropes, or other suitable tools or equipment in such a manner as to prevent damage to the pipe. Under no circumstances shall pipe or accessories be dropped into the trench. Before lowering and while suspended, tactile iron pipe shall be inspected for defects and rung with a light hammer to detect cracks. Any defective, damaged, or unsound pipe shall be rejected.

g) All foreign matter or dirt shall be removed from the inside of the pipe before it is lowered into its position in the trench, and it shall be kept clean by approved means during and after laying. Care shall be taken to prevent dirt from entering the joint space. At all times when pipe laying is not in progress, the open ends of the pipe shall be closed by approved means and no trench water shall be permitted to enter the pipe.

2. Inspections
   a) All piping, blocking and anchors, and gravel for fire hydrants shall be inspected by the city before being covered.

   b) Periodic inspections of the project will be performed by the City through completion to ensure that the project is constructed in accordance with the approved plans and meets the requirements established by the Georgia Erosion and Sedimentation Act and other applicable standards.

3. Warranty

The contractor shall warranty the installation against defects due to faulty materials and/or workmanship for a period of one year from the date of acceptance by the City. The contractor shall be responsible for repair of leaks or other failures due to materials or workmanship during the warranty period. It the City makes such repairs, the contractor shall be responsible for reimbursing the costs.

4. Ductile Iron Pipe
   a) Proper implements, tools, and facilities shall be provided and used by the Contractor for the safe and convenient prosecution of the work.

   b) Ductile Iron Pipe for use in open cut construction shall be installed per specification Section 02315 - Excavation, Trenching, and Backfill.

   c) Ductile Iron Pipe for use in jack and bore installations shall be installed inside the steel casing per detail(s) in the plans. The pipe joints through the casing shall be push-on unless otherwise specified in the plans or required to obtain proper thrust restraint due to a lack of space for thrust blocking.

   d) Ductile Iron Pipe for use in directional drilling shall be installed per specification Section 02540 – Utility Directional Drilling.

5. Hydrants
   a) Hydrants shall be set at such elevations that the connecting pipe will have the same depth of cover as the distribution mains. The connecting pipe shall be ductile iron pipe.

   b) The hydrants shall be set on a base of concrete not less than 6 inches thick and 18 inches square. The back of the hydrant opposite the pipe connection shall be firmly wedged by a poured-in-place concrete thrust block against the vertical face of the trench to prevent the hydrant from blowing off the line. The base of the hydrant shall be wrapped to prevent bond between thrust blocks and hydrants.

   c) Hydrants and valves shall have the interior cleaned of all foreign matter before installation. Not less than one cubic foot of broken stone shall be placed around the base of the hydrant.

   d) Contractor shall place a bag over the hydrant to indicate it is not in service until after the water main is put into service.

6. Water Service Connections
   a) Service lines shall be connected to 4 inch and larger mains with corporation stops. Connections to mains smaller than 4 inches shall be made with a rigid connection.

b) Minimum cover of 24 inches shall be provided until a short transition to 12 inches depth at the water meter.

c) Water service laterals shall be installed to the property line of all lots along streets and rights- of-way in which water main is constructed or to a distance of 5 feet from the building line for apartments, condominiums, or other uses besides subdivision lots, unless shown otherwise.

7. Thrust Restraint
   a) All plugs, caps, bends (11-1/4 degrees or greater), valve, hydrants, and tees subject to thrust loads shall be provided with thrust blocking, tie rods or a combination of the two. Thrust blocking shall be in accordance with the Thrust Blocking Detail shown on the Plans. Thrust blocking shall bear directly against the undisturbed soils and shall be made with concrete having a compressive strength of at least 2500 psi.

   b) Valves and fittings installed at the end of a line shall be restrained using thrust rods, Mega Lugs and a concrete deadman placed over the main, as indicated on the drawings.

   c) Valves installed on hydrant leads shall be rodded or positively coupled to the tee, in such a manner that the hydrant can be safely removed for repair by closing the valve.

   d) Thrust blocking should be so arranged that it will not interfere with reworking joints should such work become necessary.

   e) If the area for thrust blocking is over excavated beyond the dimensions required by the detail, additional concrete shall be provided to extend the thrust blocking to undisturbed earth at no additional cost to the Owner.

   f) If thrust blocking cannot be provided due to the location of surrounding utilities or lack of space in the right-of-way, pipe restraint shall be provided by the use of restrained joint piping as directed by the engineer at no additional cost to the owner.

8. Connections to Existing Water System
   a) The Contractor shall furnish necessary materials and perform all excavation, dewatering, shoring, backfilling, etc., necessary to make the connection of a new main to the existing water main.

   b) The Contractor shall notify the Engineer and Owner a minimum of 48 hours in advance of construction. The Contractor shall be responsible for coordinating his construction with the Water Department.

c) Any installation of tapping valves or insertion valves on existing live water mains shall be required to successfully pass a pressure test of the tapping sleeve and/or insertion valve pipe mounting body prior to cutting of the live main.

9. Protection of Water Supply Systems
~~See Section 02221, Paragraph 13 for protection of Water Supply Systems~~ **NOT USED**

F. JACK AND BORE

1. In locations shown on the plans, the water main shall be installed in steel casing pipe. The casing shall be plain steel, not less than 0.250-inch wall thickness and approximately 6" in diameter greater than the OD of the carrier pipe. For installations across DOT roadways or railroads, the casing size and thickness shall be per the requirements of the DOT or railroad owner.

2. Installations shall be designed so that the carrier pipe can be removed and re-installed without damage to the casing.

3. Casing spacers and end caps shall be utilized as detailed in the plans.

G. DAMAGE TO WATER SYSTEM

Damage to any part of the water system by the Contractor, or subcontractors, which is repaired by Water Department forces, shall be charged to the Contractor on the basis of time and material, plus 10 percent for overhead and administration.

H. HYDROSTATIC PRESSURE TESTING

General:

Hydrostatic pressure testing shall be performed on all newly installed potable water mains, valves, hydrants, fittings, and appurtenances after installation is complete and all thrust restraint systems have reached adequate strength. Testing shall comply with AWWA C600 (ductile iron), AWWA C605 (PVC), or AWWA C906/ASTM F714 (HDPE), as applicable. The Contractor shall furnish all labor, equipment, gauges, plugs, pumps, temporary bulkheads, restraints, water, and disposal methods. No pipe shall be placed into service until it has passed both the pressure test and leakage test.

Preparation:

Test Sections:

- Maximum test section length: 1,500 ft unless otherwise approved by the Engineer.
- All valves within the test section shall be fully open.
- Temporary restraining devices shall be installed at caps, plugs, dead-ends, and connections.

Filling the Main:

- Fill pipe slowly to prevent surge, allowing air to escape.

- Provide taps or connections at all high points to purge air.
- Contractor shall remove all trapped air; failure due to air entrapment shall be the Contractor's responsibility.

Soaking Period

- After filling, allow the main to stand at normal operating pressure for a minimum of 2 hours (6–24 hours preferred for PVC or HDPE). This allows pipe expansion to stabilize.

Test Pressure:

Apply a hydrostatic test pressure of 150 psi or 1.5 times the working pressure, whichever is greater, as measured at the lowest elevation in the test segment.

- DI pipe: per AWWA C600
- PVC pipe: per AWWA C605
- HDPE pipe: per AWWA C906 / PPI TR-46

Duration

The test pressure shall be maintained for a minimum of 2 hours.

Test Equipment Requirements

Pressure Gauges

- Calibrated, liquid-filled gauge
- Dial diameter ≥ 4 inches
- Accuracy: ±1 psi
- Full-scale range: 0–300 psi (or appropriate for test pressure)

Pumps

- Capable of maintaining steady pressure
- Equipped with isolation valves and backflow protection devices

Bulkheads, Plugs, and Fittings

- Pressure-rated
- Mechanically restrained
- Tested and approved by the Engineer prior to testing

Chlorinated water shall not be discharged to streams or wetlands without neutralization using sodium thiosulfate or Engineer-approved dechlorination method.

Documentation

Submit the following to the Engineer:

- Test pressure graph or log
- Duration of test
- Make-up water volume

- Gauge calibration certificates
- Notes on any failures and corrective measures
- All test records become part of the project closeout documents.

I. LEAKAGE TESTING

Leakage Test

- After the pipe passes the pressure test, conduct a leakage test.
- Allowable Leakage Formula (AWWA C600/C605)
- Maintain the test pressure (150 psi) for 2 hours.
- Measure the amount of make-up water required to maintain pressure.
- Compare to allowable leakage.

Acceptance Criteria

- Leakage shall not exceed the calculated allowable value.
- Zero visible leaks are permitted at joints, fittings, valves, or hydrants.
- Leaks shall be repaired and the section retested until passing.

Testing Special Appurtenances

- Hydrant valves shall be partially opened to pressurize internal hydrant barrel.
- Hydrants shall not be used as test bulkheads.
- Test section valves shall be fully open.
- Valves shall be individually tested for proper operation after the main test.

Tapping Sleeves & Wet Taps

- The tapping sleeve assembly shall be field pressure-tested to 200 psi for 30 minutes before tapping.
- Pressure test shall be performed through the sleeve test port.

Failure, Repairs, and Retests

The test is considered a failure if:

- Leakage exceeds allowable
- Pressure drop cannot be maintained
- Visible leakage occurs at any joint or appurtenance
- Air is found in the line

Repairs

- All defects shall be corrected by the Contractor at no cost to the Owner.
- Cutting the pipe to repair a joint or leak is prohibited unless approved by the Engineer.
- Additional thrust restraint may be required if the main shifts during testing.

Retesting

- After repairs, the full sequence (soaking, pressure test, leakage test) shall be repeated.
- No additional payment shall be made for retesting.

Water Disposal

Contractor shall dispose of test water in accordance with:

- Georgia EPD rules
- Local ordinances
- Stormwater pollution control requirements (NPDES/GSWCC)

J. CLEANING AND DISINFECTION OF NEW MAINS

All water mains must be cleaned, disinfected, and the water passing through them must be shown safe by laboratory tests results before the system can be placed in service. Disinfection of all water lines shall be in accordance with AWWA C651. Approved methods for the accomplishment of disinfection are as follows:

1. Clean the interior of all pipes by brushing, swabbing, or washing out all debris before laying. Stop up all branches and other openings with plugs until either capped or connected.

2. Install a sufficient number of hydrants to give representative sampling on the newly installed lines. The hydrants should be at least 18 inches higher than main and must discharge toward the ground.

3. Flush the new pipelines until the water runs clear at the end of all mains and laterals. This should be done after the pressure test and before disinfection. Each valved section of the newly laid pipe should be flushed separately with potable water.

4. Disinfect the pipelines with chlorine. The preferable point of application of the chlorinating agent is at the beginning of the pipeline extension, or any valved section of it, and through a corporation cock inserted in the horizontal axis of the newly laid pipe during the application of the chlorine.

5. Partially open hydrants or valves on the newly laid line under treatment to prevent the building up of water pressure. Continue treatment until the water flowing from the hydrants at the far end of the main contains sufficient residual chlorine to develop a deep red color (50 parts per million) when orthotolidine reagent is added to a sample of water. Stop the flow of water and chlorine by closing all openings. The chlorine residual after 24 hours shall be not less than 25 parts per million (ppm).

6. During flushing of the line, do not allow heavily chlorinated water to flow directly into waters of the state or wetlands. Employ aeration or de-chlorination at the direction of the Engineer to prevent environmental damage at no additional cost to the Owner.

7. Allow the treated water to remain in the pipeline for at least 24 hours following which period the main must be thoroughly flushed until all the heavily chlorinated water has been removed. Test water samples with orthotolidine reagent to make sure all chlorine has been flushed out or until the concentration of chlorine in the newly laid lines is no higher than that of a sample taken on the supply line.

8. Chlorine products for disinfecting water pipes are available in several forms as follows:
   a) Liquid chlorine is available in 100- and 150-pound steel cylinders.

   b) High test calcium hypochlorite is a powder and is available in 4-pound tins and 100-pound drums. The chlorine content is approximately 65 percent (comparable to commercial products known as "Perchloron", "H.T.H.", "Maxochlor", etc.)

   c) Chlorinated lime is a powder and is available in 12-ounce cans and 110-pound drums. The chlorine content varies from 24 percent to 33 percent. Chlorinated lime is also known as chloride of lime and as bleaching powder.

9. Liquid chlorine may be applied to water mains by means of a solution feed chlorinating device or the gas may be fed directly from the cylinder provided it is equipped with proper devices for regulating the rate of flow and the effective diffusion of gas within the pipe. The former method is preferable to the direct feed method.

10. High test calcium hypochlorite or chlorinated lime must be prepared as a water mixture for introduction into the water mains. Either powder should first be made into a paste and then thinned to about one percent chlorine solution. This requires the following proportions of powder to water:

    a) Prepare a one percent chlorine solution in a wooden or plastic barrel and permit solids to settle. Apply the clear supernatant solution to the main though a rubber hose either by gravity, siphonage, injection, or by pumping.

    b) The application of small amounts of dry hypochlorite or chlorinated lime to each length of pipe as it is laid <u>will not be permitted</u>.

11. After the new lines have been properly cleaned, sterilized, and flushed, the Contractor shall send samples of the water to a state approved independent laboratory. Two samples shall be taken 24 hours apart from locations selected by the Engineer.

12. The Engineer will arrange for the regulatory agency inspection. Lines will not be placed in operation until agency approval and Engineer directs Contractor to do so.

13. A hydrant flow test will be performed after the lines are placed in service as directed by the Engineer. Results of the test will be reported in writing to the Engineer.

K. ABANDON EXISTING UTILITIES

1. All existing lines ≤6" to be abandoned shall be cut and plugged. All existing lines greater than 6" to be abandoned shall be cut and plugged, unless they are to remain underneath a GDOT roadbed, in which case they shall also be filled with grout.

2. All existing hydrants on water mains to be abandoned shall be removed and returned to the City.

3. All existing valves on water mains to be abandoned shall have the valve box removed and the remaining hole shall be filled with soil, effectively burying the existing valve.

END OF SECTION

SECTION 15200
VALVES AND APPURTENANCES

PART 1 – GENERAL

1.01 SCOPE

A. Furnish all labor, materials, equipment and incidentals required and install complete and ready for operation all valves and appurtenances as shown on the Drawings and as specified herein.

B. All valves complete with pneumatic or manual operators as required shall be furnished by a single manufacturer and shall be coordinated with instrumentation and controls.

1.02 RELATED WORK

N/A

1.03 DESCRIPTION OF SYSTEMS

A. All of the equipment and materials specified herein are intended to be standard for use in controlling the flow of water, sludge, chemicals, etc., depending on the applications.

1.04 QUALIFICATIONS

A. All of the types of valves and appurtenances shall be products of well established reputable firms who are fully experienced, reputable and qualified in the manufacture of the particular equipment to be furnished. The equipment shall be designed, constructed and installed in accordance with the best practices and methods and shall comply with these specifications as applicable.

1.05 SUBMITTALS

A. Submit to the Engineer within 30 days after execution of the contract a list of materials to be furnished, the names of the suppliers and the date of delivery of materials to the site.

B. Complete shop drawings of all valves and appurtenances shall be submitted to the Engineer for approval in accordance with the requirements by Section 01300 and the General Conditions.

1.06 TOOLS

A. Special tools, if required for normal operation and maintenance, shall be supplied with the equipment.

PART 2 - PRODUCTS

2.01 GENERAL

A. All valves and appurtenances shall be of the size and type shown on the drawings.

B. All valves and appurtenances shall have the name of the maker and the working pressure for which they are designed cast in raised letters upon some appropriate part of the body.

2.02 GATE VALVES

All gate valves shall be NSF/ANSI 61 certified and constructed from materials conforming to AWWA C509. Gate valves shall be designed for a working pressure of not less than 200 psi and shall take full pressure on either face. Valves shall be hydrostatically tested in accordance with AWWA C509.

Gate Valves 3” to 12” in size shall be resilient-seated with a non-rising stem. Valves shall be provided with a 2” square operating nut and shall be right hand closed valves. The valves shall be taken from one manufacturer and similar sizes shall have interchangeable parts.

All internal and external surfaces shall be coated with epoxy to a minimum thickness of 8 mils and meeting the requirements of ANSI/AWWA C550. Valve disks shall be coated with a rubber material conforming to AWWA C509 so that there shall be no metal to metal contact when the valve is in the fully closed position.

Valves shall be manufactured by Mueller Co., American-Darling Corp., or M & H Valve.

2.03 VALVE BOXES

A. All buried valves shall have cast iron two- or three-piece valve boxes with cast iron covers. Valve boxes shall be provided with suitable heavy bonnets and extend to such elevation at or slightly above the finished grade surface as directed by the Engineer. The barrel shall be one or two-piece, screw type, having 5-1/4-inch shaft. Covers shall have "WATER" cast into the top for all water mains and "DRAIN" cast into the top of all drain lines. All valves shall have actuating nuts extended to within six inches of the top of valve box cover.

B. Valve boxes shall be provided with concrete base and valve nameplate with suitable anchors for casting in concrete. Nameplate shall be 3-inch diameter bronze disk with raised lettering 1/8-inch high as shown on the Drawings and manufactured by Shiedow Bronze Corporation, Kingwood, W. VA; or equal.

PART 3 - EXECUTION

3.01 INSTALLATION

A. All valves and appurtenances shall be installed in the locations shown, true to alignment and rigidly supported. Any damage to the above items shall be repaired to the satisfaction of the Engineer before they are installed.

B. After installation, all valves and appurtenances shall be tested at least 2 hours at the working pressure corresponding to the class of pipe, unless a different test pressure is specified. If any point proves to be defective, it shall be repaired to the satisfaction of the Engineer.

C. Flanged and mechanical joints under water or exposed to weather shall be made with type 304 stainless steel bolts, nuts and washers.

D. Valve boxes with concrete bases shall be installed as shown on the Drawings. Mechanical joints shall be made in the standard manner. Valve stems shall be vertical in all cases. Place cast iron box over each stem with base bearing on compacted fill and top flush with final grade. Boxes shall have sufficient bracing to maintain alignment during backfilling. Knobs on cover shall be parallel to pipe. Remove any sand or undesirable fill from valve box.

3.02 INSPECTION AND TESTING

A. Completed pipe shall be subjected to hydrostatic pressure tests for four (4) hours at full working pressure. All leaks shall be repaired and lines retested as approved by the Engineer. Prior to testing, the gravity pipelines shall be supported in an approved manner to prevent movement during tests.

END OF SECTION

SECTION 70001
CHEMICAL FEED SYSTEM

A. SCOPE

Under this heading shall be included the installation of the chemical feed pumps as shown and described on the plans and as specified herein. The Contractor shall comply with all local codes and regulations of local utilities. They shall coordinate all work necessary for the completion of utilities with local utility companies and cooperate with the companies as required.

B. REFERENCES

Hydraulic Institute: Current Standards.

1. HI 7.1-7.8 – Reciprocating Metering Pumps

C. SHOP DRAWINGS/SUBMITTALS

Submittal data shall be provided to show compliance with these specifications, plans or other specifications that will influence the proper operation of the pump(s).

Standard submittal data for approval must consist of:

1. Pump Performance Curves.
2. Pump Outline Drawings.
3. Station Drawing for Accessories.
4. Electrical Motor Data.
5. Typical Installation Guides.
6. Technical Manuals and Parts List.
7. Printed Warranty.
8. Management system certificate ISO 9001.
9. Manufacturer's Equipment Storage Recommendations.
10. Manufacturer's Standard Recommended Start-Up Report Form.

Lack of the above requested submittal data is cause for rejection.

D. QUALIFICATION REQUIREMENTS

The manufacturer shall provide data on alternate equipment manufacturer's experience. Only Manufacturers with 10 or more years of experience who have furnished at least 5 similar projects shall be considered.

E. MATERIALS/PRODUCTS

The following chemical feed pumps are to be provided and installed:

Chemical Feed Pumps

Pump: Grundfos **DDE 6-10 P-PV/T/C-X-31I003BG**
Quantity: Eight (8) – four for Chlorine and four for Fluoride.
Voltage – 1 x 100-240 V

See attached technical data sheets and pump curves at the end of this specification Section.

Chemical Feed Piping:

Chemical metering pump discharge lines to be ¼-inch OD PVDF with internal diameter approximately 0.17 inch, rated for a minimum working pressure of 250 psi at 73°F, NSF/ANSI 61 and 372 certified, and compatible with sodium hypochlorite and fluoride solutions. Tubing shall run from the chemical feed pump discharge to a local transition assembly, where it shall connect to ½-inch Schedule 80 PVC chemical injection piping and injection quill. Standard low-pressure peristaltic pump tubing shall be limited to the pump head only and shall not be used as distribution piping

Provide a vent/return hose to carry air and off-gassed bubbles from the deaeration port out of the pump head and back to the chemical tank.

Chemical Feed Valves:

Each chemical feed pump shall be equipped with a full-port ball isolation valve. Valves to manufactured by Hayward Flow Control or approved equal.

Each combined feed line (two chlorine lines and two fluoride lines) to be equipped with:

- One factory-assembled back-pressure / anti-siphon valve with PVC, CPVC, PP, or PVDF body; PTFE diaphragm; EPDM or Viton seals; adjustable spring set for 20–60 psi nominal back-pressure (capable of up to 150 psi or more); rated for chemical service with sodium hypochlorite and fluoride, and NSF/ANSI 61 & 372 certified; compatible with chemical feed line size. Valves to manufactured by Hayward Flow Control, Walchem, Griffco, Pulsafeeder, or approved equal.
- A factory-set, field-adjustable pressure relief valve to protect the pumps and small-bore piping from overpressure. Valve shall be spring-loaded, direct-acting, and suitable for continuous chemical service. Wetted body and trim shall be PVC, CPVC, PP, or PVDF with PTFE diaphragm/seat and EPDM or Viton (FKM) seals, fully compatible with sodium hypochlorite and fluoride solutions and NSF/ANSI 61 & 372 certified. Minimum working pressure rating shall be ≥ 200 psi at 73°F. Relief setpoint shall be adjustable over a range of at least 25–150 psi, factory set to approximately 25–50 psi above normal operating backpressure as indicated on the Drawings. The relief discharge line shall be hard-piped or tubed back to the originating chemical storage tank with an air gap; discharge to floor drains or the building interior is not permitted. Valves to manufactured by Hayward Flow Control, Walchem, Griffco, Pulsafeeder, or approved equal.
- Provide a spring-loaded, non-slam check valve in each chemical feed discharge line downstream of the pump, backpressure/relief valves. Check valve shall be designed for low-flow chemical metering service and installed to prevent backflow from the process line into the chemical feed system and storage tank. Wetted components shall be PVC, CPVC, PP, or PVDF body, with PTFE seat and EPDM or

Viton seals, compatible with sodium hypochlorite and fluoride and NSF/ANSI 61 & 372 certified. Valve shall have a minimum working pressure rating of ≥ 200 psi at 73°F and cracking pressure suitable for low metering pump flows (typically 1–3 psi). End connections shall match the chemical feed line size and type (compression or FNPT as indicated). Valves to manufactured by Hayward Flow Control, Griffco, Pulsafeeder, or approved equal.

- Full-port ball isolation valve at the injection port connection.

Mounting Brackets & Panels

Each chemical feed pump shall be mounted on manufacturer-provided wall-mount bracket fastened to concrete or masonry walls at approximately 4–5 ft elevation for operator accessibility. Provide anti-vibration pads or rubber isolators to protect pumps. Provide a stainless steel, wall-mounted accessory panel adjacent to pumps for mounting isolation valves, backpressure/anti-siphon valves, relief valves, check valves, and tubing supports.

F. EXECUTION/INSTALLATION

1. GENERAL
   Perform installation in accordance with Contract Documents and Manufacturer's specifications.

2. DELIVERY, STORAGE AND HANDLING
   Deliver, store and handle products to site under provisions of the Contract & Specifications.

3. INSTALLATION EQUIPMENT
   Contractor shall furnish all tools, material, labor, and equipment necessary to install the chemical feed pumps.

4. START-UP
   After installation, pump start-ups shall be performed by the installing contractor under the supervision of the Manufacturer's authorized representative. Two (2) days of field service shall be provided by an authorized, factory-trained representative of the pump manufacturer. Services shall include, but not be limited to, inspection of the completed chemical feed installation to ensure that it has been performed in accordance with the manufacturer's instructions and recommendations, supervision of all field testing and activation of the Pump Manufacturer's Warranty. The test shall demonstrate to the satisfaction of the Owner that the equipment meets all specified performance criteria, is properly installed and anchored, and operates smoothly without exceeding the full load amperage rating of the motor. The Contractor shall be responsible for coordinating the required field services with the Pump Manufacturer.

5. FACTORY TRAIED SUPERVISION
   The contractor shall procure a factory-trained technician to inspect equipment prior to putting the equipment into operation.

   Contractor to provide point to point test of all wiring.

   Functional test of all equipment alarms and controls.

6. WARRANTY
   When installed in accordance with all the provisions of this section, related sections and the supplier's installation manual, the warranty on the Monitoring and Control equipment shall be 12 months. The warranty period shall start from the date of equipment delivery to the job site.

GRUNDFOS

Company name:
Created by:
Phone:

Date: 02/10/2025

Qty.	Description
1	**DDE 6-10 P-PV/T/C-X-31I003BG**



Note! Product picture may differ from actual product

Product No.: 97721114

The SMART Digital DDE is a compact positive displacement, diaphragm dosing pump with variable-speed drive (stepper motor) and intelligent control electronics with minimum energy consumption.

The SMART Digital Dosing series operates at full stroke length to ensure optimum accuracy, priming and suction, even for degassing liquids.

The duration of each discharge stroke varies according to the capacity set, resulting in optimum smooth and continuous discharge flow.

The click-stop mounting plate allows installation in three different positions without using any additional accessories. The dosing flow can be adjusted by means of an adjustment knob on a logarithmical scale from 0.1-100%.

The dosing head is composed of:
- Long lifetime and universal chemical resistant Full-PTFE diaphragm.
- Double ball valves for highest dosing accuracy.
- Deaeration valve for easy start-up.

Operation modes:
- Manual dosing from 0.1 to 100%.
- Pulse control (divisor function included).

Other features:
- 100 % key (max. capacity), e.g. for deaearation.
- Operation mode switch key between manual and pulse.
- Status LEDs for pulse and manual.
- Mechanical lock to protect the pump against unauthorised access.

Signal- Inputs/outputs:
- Input for pulse, external stop.
- Input for empty tank signal.

Installation set includes:
- Foot valve (without level switch).
- Injection unit.
- 6 m PE discharge hose.
- 2 m PVC suction hose.
- 2 m PVC deaeration hose (4/6 mm).

Technical:

Max. Flow:	6 l/h
Min flow:	6.0 ml/h
Turn-down ratio:	1:1000
Approvals:	CE,CSA-US,NSF61,RCM
Valve type:	Standard
Maximum viscosity at 100 %:	50 mPas
Maximum viscosity in slow mode 50 %:	N/A mPas
Maximum viscosity in slow mode 25 %:	N/A mPas

GRUNDFOS

Company name:
Created by:
Phone:

Date: 02/10/2025

Qty.	Description	
1	Accuracy of repeatability:	5 %
	Materials:	
	Dosing head:	PVDF (Polyvinylidene fluoride)
	Valve ball:	Ceramic Al2O3
	Gasket:	PTFE
	Installation:	
	Range of ambient temperature:	32 .. 113 °F
	Maximum operating pressure:	145.04 psi PVC / 232 PSI PVDF ✓
	Type of inlet connection:	Hose
	Type of outlet connection:	Hose
	Installation set (Yes/No):	YES
	Installation type:	0,17x1/4" up to 7,5 l/h,16bar
	Max. Suction lift during operation:	6 m
	Max. Suction lift during priming:	2 m
	Liquid:	
	Pumped liquid:	Water
	Liquid temperature range:	32 .. 113 °F
	Selected liquid temperature:	68 °F
	Density:	62.29 lb/ft³
	Electrical data:	
	Power input P1:	19 W
	Mains frequency:	50 / 60 Hz
	Rated voltage:	1 x 100-240 V
	Enclosure class (IEC 34-5):	IP65 / TYPE 4X
	Length of cable:	1.5 m
	Power plug:	US plug
	Inrush current:	25A at 230V for 2ms
	Controls:	
	Control variant:	P
	Level control:	YES
	Pulse control:	YES
	Ext. Stop input:	Yes
	Output relays:	No
	Others:	
	Net weight:	4.65 lb
	Gross weight:	5.97 lb
	Country of origin:	US
	Custom tariff no.:	8413.50.0050

GRUNDFOS

Company name:
Created by:
Phone:

Date: 02/10/2025

97721114 DDE 6-10 P-PV/T/C-X-31I003BG

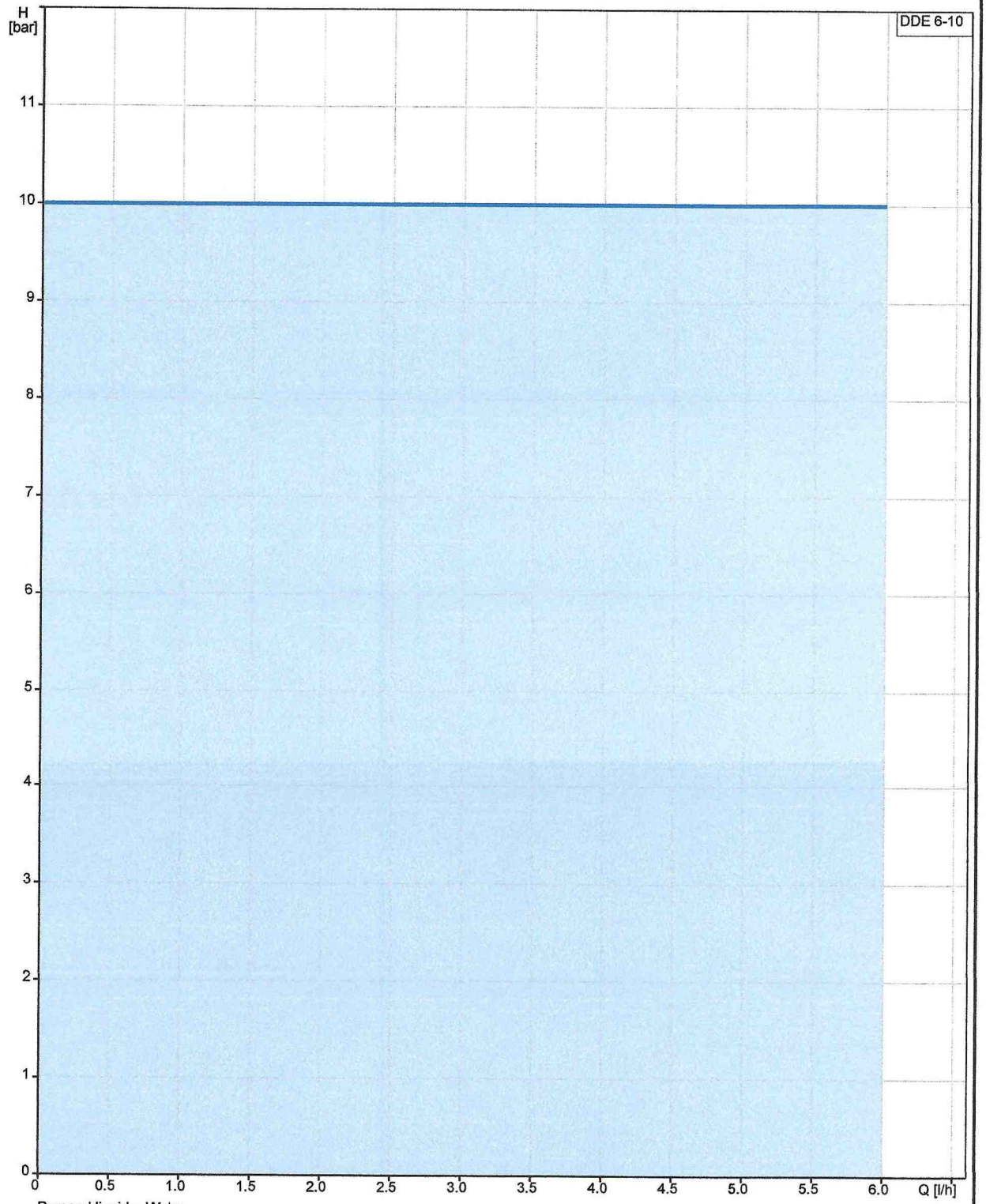

Pumped liquid = Water
Liquid temperature during operation = 68 °F
Density = 62.29 lb/ft³

GRUNDFOS

Company name:
Created by:
Phone:

Date: 02/10/2025

Description	Value
General information:	
Product name:	DDE 6-10 P-PV/T/C-X-31I003BG
Product No:	97721114
EAN number:	5710622712544
Technical:	
Max. Flow:	6 l/h
Min flow:	6.0 ml/h
Turn-down ratio:	1:1000
Approvals:	CE,CSA-US,NSF61,RCM
Valve type:	Standard
Model:	A
Maximum viscosity at 100 %:	50 mPas
Maximum viscosity in slow mode 50 %:	N/A mPas
Maximum viscosity in slow mode 25 %:	N/A mPas
Accuracy of repeatability:	5 %
Materials:	
Dosing head:	PVDF (Polyvinylidene fluoride)
Valve ball:	Ceramic Al2O3
Gasket:	PTFE
Installation:	
Range of ambient temperature:	32 .. 113 °F
Maximum operating pressure:	145.04 psi
Type of inlet connection:	Hose
Type of outlet connection:	Hose
Installation set (Yes/No):	YES
Installation type:	0,17x1/4" up to 7,5 l/h,16bar
Max. Suction lift during operation:	6 m
Max. Suction lift during priming:	2 m
Liquid:	
Pumped liquid:	Water
Liquid temperature range:	32 .. 113 °F
Selected liquid temperature:	68 °F
Density:	62.29 lb/ft³
Electrical data:	
Power input P1:	19 W
Mains frequency:	50 / 60 Hz
Rated voltage:	1 x 100-240 V
Enclosure class (IEC 34-5):	IP65 / TYPE 4X
Length of cable:	1.5 m
Power plug:	US plug
Inrush current:	25A at 230V for 2ms
Controls:	
Control variant:	P
Level control:	YES
Pulse control:	YES
Ext. Stop input:	Yes
Output relays:	No
Others:	
Net weight:	4.65 lb
Gross weight:	5.97 lb
Country of origin:	US
Custom tariff no.:	8413.50.0050

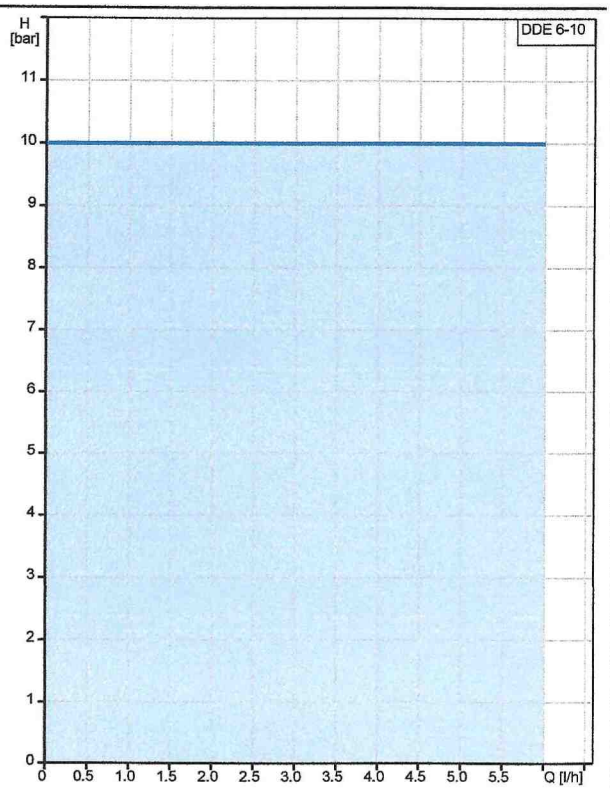

Pumped liquid = Water
Liquid temperature during operation = 68 °F
Density = 62.29 lb/ft³

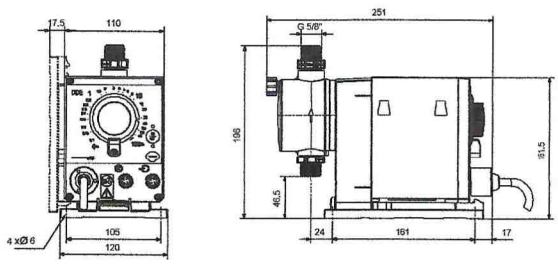

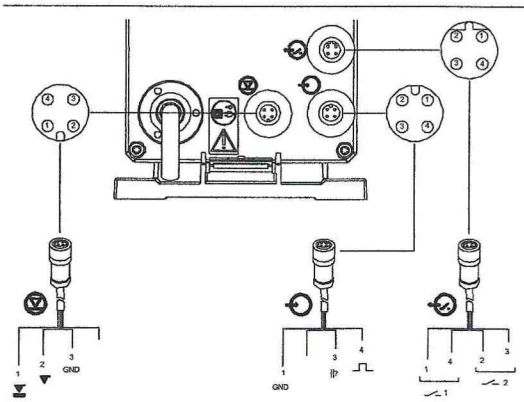

GRUNDFOS

Company name:
Created by:
Phone:

Date: 02/10/2025

97721114 DDE 6-10 P-PV/T/C-X-31I003BG

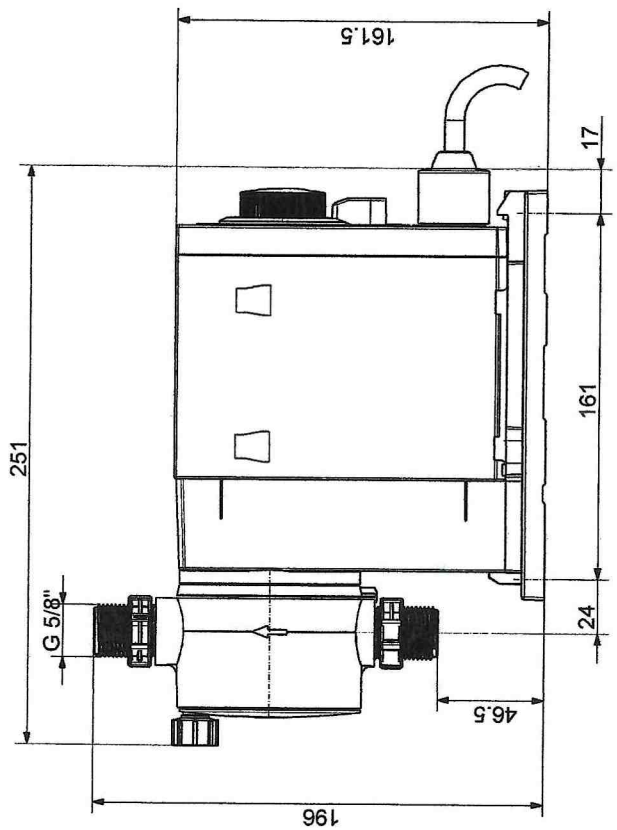

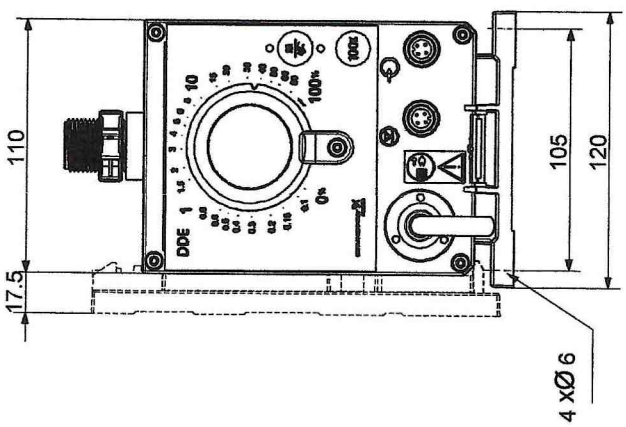

Note! All units are in [mm] unless others are stated.
Disclaimer: This simplified dimensional drawing does not show all details.

GRUNDFOS

Company name:
Created by:
Phone:

Date: 02/10/2025

97721114 DDE 6-10 P-PV/T/C-X-31I003BG

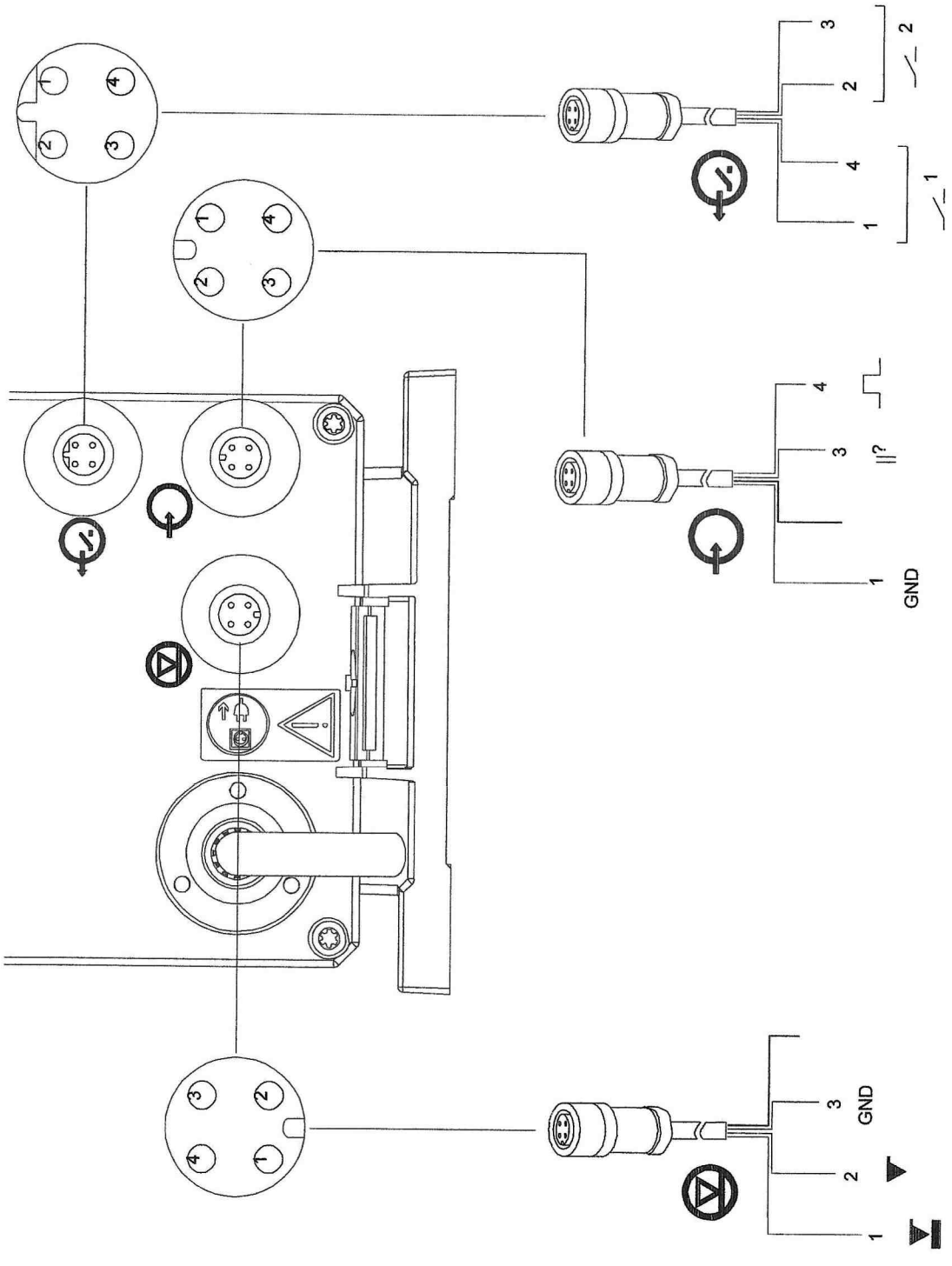

Note! All units are in [mm] unless others are stated.

SECTION 80001
WELL REHABILITATION

A. SCOPE

Under this heading shall include the rehabilitation of the Henderson and Waterstone Wells as shown on the plans and as specified herein. The Contractor shall comply with all local codes and regulations of local utilities.

Both wells shall receive the following procedures (in this order) to be considered a full rehabilitation.

Initial CCTV Inspection has been performed.

B. STEPS

1. Sediment Removal: Sediment Removal by mechanical cleaning (prior to air-bursting) is to be performed by use of a pump or suction hose to remove the loose mud and sediment form the bottom of the well.
2. Air Burst Cleaning: This Section covers the rehabilitation of municipal drinking water supply wells using compressed air impulse (airburst) cleaning methods in accordance with the following standards

    - Georgia EPD Rules for Safe Drinking Water (391-3-5)
    - Georgia Water Well Standards
    - AWWA A100 – Water Wells
    - NGWA Guidelines for Well Rehabilitation

    a. Submittals: The Contractor shall submit the following for Engineer approval prior to mobilization.
        i. Tool Manufacturer & Model
        ii. Proposed pressure ranges and monitoring procedure
        iii. Sequence of cleaning operations
        iv. Safety measures (OSHA, high-pressure controls)
        v. Discharge water management plan consistent with EPD stormwater/NPDES requirements
    b. Qualifications: Contractor shall have a minimum of five (5) years of documented experience rehabilitating Georgia public water supply wells.
    c. Post-Cleaning CCTV: Contractor shall perform and provide recorded video of full-depth downhole video inspection showing the cleaned screens and gravel pack response.
    d. Final Well Rehabilitation Report Containing: Pressure logs, Operating Intervals, Turbidity Data, Development Duration, Final Pumping Results, Disinfection logs per GA EPD standards.
    e. Quality Assurance: All work shall comply with the following requirements.
        i. GA EPD 391-3-5.04 Well Construction Standards

ii. GA EPD 391-3-5-.05 Maintenance & Disinfection Requirements
iii. GA EPD Drinking Wate Program Standards for Public Water Systems

f. Tools and methods shall not damage well casing, screen, or sanitary seal.
g. All chemicals introduced to the well must be NSF/ANSI 60 certified for potable water use.
h. AIR BURST CLEANING PROCEDURE
    i. Tool Positioning
        1. Lower tool to the lowest screen interval
        2. Verify depth using electronic indicator.
    ii. Controlled Impulse Application
    iii. Begin at bottom of screen; apply impulses for 3-5 minutes per interval.
    iv. Pulse frequency: 1-5 second intervals
    v. Pressure range: 1,000-3,000 PSI unless hydrogeologist specifies otherwise.
    vi. Raise tool 5-10 ft/cycle and repeat
    vii. Perform a minimum of two complete passes from bottom to top of screen.
    viii. Monitor: pressure levels, turbidity, well response (vibration, surge behavior)
    ix. Operational Restrictions
        1. Do not exceed pressures that risk screen or casing deformation
        2. Stop work immediately if:
            a. Sudden pressure loss is encountered
            b. Collapse indicators
            c. Abnormal well behavior
            d. Notify Engineer for evaluation before resuming.

3. 72-HOUR PUMP TEST: The Contractor shall furnish all labor, equipment, materials and appurtenances necessary to conduct a continuous 72-hour constant-rate aquifer pumping test on the designated production well. The purpose is to evaluate aquifer transmissivity, specific capacity, drawdown behavior, and hydraulic influence on surrounding wells or surface water features.
    a. Pumping Equipment
        i. Submersible or line-shaft pump capable of maintaining the specified test discharge rate (±5%) for the entire test duration.
        ii. Pump shall be sized to allow for both step-drawdown testing and the 72-hour test rate.
        iii. Pumps to be capable of pumping 150% of expected wells production flows. Expected production flows:
            1. Henderson well: 250 gpm
            2. Waterstone well: 100 gpm
    b. Discharge Measurements
        i. Calibrated flow meter (magnetic or inline turbine) with accuracy ±2%.
        ii. Manual backup measurement device (eg., volumetric tank, pilot tube, or orifice plate).
    c. Water Level Measurements
        i. Electronic water level sounder (manual)

ii. Pressure transducer/data logger capable of:
    1. 1-5 second interval for start/recovery
    2. <1 cm accuracy
    3. Temperature compensation

d. Discharge Piping
    i. Discharge shall be routed to a location preventing recirculation or erosion; minimum 200' from wellhead unless otherwise approved.
    ii. Contractor shall provide flow dissipation control (via rip-rap check dam or other suitable device) at point of discharge to ensure protection of downstream area and prevent erosion.

e. Generator/Electrical
    i. Power supply is the responsibility of the contractor and must allow for uninterrupted 72-hour operation.

f. PRE-TEST REQUIREMENT
    i. Pre-Test Coordination
        1. Contractor shall notify Engineer 48 hours before mobilization.
        2. Confirm pumping rate, measurement intervals, discharge location, and safety protocols
    ii. Well Preparation
        1. Measure baseline static water level after at least 12 hours of non-pumping conditions.
        2. Verify well development is complete before beginning tests.
    iii. Calibration
        1. Flow meter, level probes, and synchronized clocks will be calibrated and documented.

C. OPERATIONAL PROCEDURE

1. Performed prior to the 72-hour test.
    a. Minimum 3–4 pumping steps each lasting 60 minutes.
    b. Increase rate incrementally (e.g., 50%, 75%, 100%, 125% of target rate).
    c. Record the following every 1 minute for the first 10 minutes, then every 5 minutes for remainder:
        i. Pumping rate
        ii. Water level
        iii. Discharge pressure
        iv. Voltage/amp load on motor

    Results determine the constant-rate test pumping rate.

2. DISINFECTION - Performed prior to the 72-hour test.
    a. Chlorinate the well and use a 50–100 mg/L free chlorine solution, calculate based on well volume.
    b. Circulate / agitate - Recirculate water downhole and out discharge to mix thoroughly with chlorine solution.
    c. Contact time - Maintain chlorine in well for 12–24 hours (minimum 8 hours).

d. Dechlorinate before discharge - Neutralize to <0.1 mg/L per state water-quality discharge rules.
e. Flush until chlorine is no longer present and continue flushing until:
f. Chlorine <0.1 mg/L
g. Water is visually clear
h. Turbidity stabilized
i. Collect post-disinfection bacteriological sample
j. After flushing and stabilization, collect:
k. Total coliform / E. coli (bacteriological)
l. Additional parameters if required by EPD

3. 72-Hour Constant-Rate Pump Test
    i. Startup (0 to 10 minutes)
        1. Start pump and adjust discharge until target rate is achieved ±5%.
        2. Measure and record water level every 30 seconds for the first 5 minutes, then every 1 minute through 10 minutes.
    ii. First Hour
        1. Record water levels at:
        2. 1-minute intervals for first 10 minutes
        3. 5-minute intervals from 10–60 minutes
    iii. 1 to 8 Hours
        1. Record water level every 10 minutes.
    iv. 8 Hours to 72 Hours
        1. Record water level every 30 minutes.
    v. Discharge Rate
        1. Record flow rate every 30 minutes throughout test.
        2. Rate shall not vary more **than ±5%;** if variation exceeds limits:
            a. Note deviation
            b. Correct immediately
            c. Do not stop pump unless required for safety
    vi. Operational Logging
        1. Contractor shall maintain a log noting:
        2. Pump amperage and voltage
        3. Weather conditions
        4. Discharge location changes
        5. Any maintenance or anomalies
        6. Turbidity or water quality observations

4. 24-HOUR / 48-HOUR INTERIM CHECKS
    a. The Engineer will inspect on site at minimum:
        i. Hour 24
        ii. Hour 48 Adjustments to discharge rate shall be made only under Engineer's direction.

5. TERMINATION OF PUMPING
    a. At completion of 72 hours:
    b. Shut pump down without throttling.
    c. Immediately begin recovery monitoring.

6. RECOVERY TEST PROCEDURES
    a. Measurement Intervals
        i. First 5 minutes: every 15 seconds
        ii. 5–10 minutes: every 30 seconds
        iii. 10–30 minutes: every 1 minute
        iv. 30–60 minutes: every 5 minutes
        v. 1–6 hours: every 10 minutes
        vi. Continue until water level returns to 95% of static or for a minimum of 12 hours.

7. DATA REPORTING
    a. Required Outputs
        i. The Contractor shall submit a report including:
        ii. Time–drawdown and time–recovery tables
        iii. Pumping rate logs
        iv. Water-level plots
        v. Transducer raw data (CSV format)
        vi. Step-drawdown analysis (Jacob or Hantush/Bierschenk)
        vii. Constant-rate analysis:
            1. Cooper-Jacob straight-line method
            2. Theis type curve match
            3. Specific capacity (gpm/ft)
            4. Estimated transmissivity (T) and storativity (S)
    b. Equipment and Test Log
        i. Include:
            1. Pump horsepower and setting depth
            2. Meter calibration sheets
            3. Any interruptions or anomalies
            4. Weather conditions during testing

8. ACCEPTANCE CRITERIA
    a. Test is considered valid if:
        i. Pumping rate remained within ±5%
        ii. No unscheduled shutdowns occurred
        iii. Drawdown measurements follow required intervals
        iv. Recovery of at least 95% of static level achieved
        v. Data is complete and submitted in required formats

9. WATER QUALITY SAMPLING/ANALYSIS
    a. At the end of the 72-hour test and when no chlorine disinfectant is present.
        i. For samples required for collection and timing of when samples are to be taken for EPD lab approval refer to GA. Comp. Rules & Regulations r. 391-3-5-.14 Operation; Item # 11 Certified Laboratories .18 - .27.

10. FINAL REPORTING
    a. A hydrogeologist will provide a final report of each well containing a summary of the water quality analysis summary and pump rates.
    b. The above-mentioned work will be overseen by a third-party hydrogeologist, Dan Harman at Ground-Water Services, Inc. It is the Contractor's responsibility to coordinate with the hydrogeologist for the performance of the work.

END OF SECTION

SECTION 90001
COVERED AREA (FOR THE SPILL CONTAINMENT AREA)

A. SCOPE

Under this heading shall be included installation of the COVERED AREA (FOR THE SPILL CONTAINMENT AREA) as shown on the plans and as specified herein. The Contractor shall comply with all local codes and regulations of local utilities. Contractor shall coordinate work necessary for the completion of utilities with local utility companies and cooperate with the companies as required.

Construct a lean-to procured through Renegade Steel meeting the detailed specifications in the construction details. This structure will be made of red-iron I-beams and metal corrugated roof. The entire covered area system shall be mounted to the concrete footers by base plates, bolts, and fasteners in 4 corner locations with 8 beams. It shall be 9' in height from finished floor elevation to the top of the roof along the building and 8'-4 ½" along the low side of the roof. A roof ridge shall be placed between the prefabricated structure and the extended 2' roof extension to minimize water intrusion.

For pricing the COVERED AREA please contact Mason Pavlik at Renegade Steel Buildings, Inc. via email; mpavlik@renegadebuildings.com.

A covered area can be field erected onsite, but it must meet all criteria for the COVERED AREA Renegade Steel Building solution. The criteria to meet this specification shall be the burden of the contractor to provide an engineered design solution to meet this specification.

B. SUMMARY

a. This section includes materials, fabrication, delivery, and installation of a pre-engineered, red-iron, welded-plate I-beam lean to structure manufactured by Renegade Steel, Inc. (or approved equal).
b. Work includes, but is not limited to:
    i. Structural steel primary framing (I-beams, rafters, columns/posts)
    ii. Secondary framing (purlins, girts, eave struts)
    iii. Roof panels and fasteners
    iv. Trim, flashing, closures, and accessories
    v. Factory-applied finishes
    vi. Anchor bolts, base plates, and connection hardware

C. REFERENCES

a. AISC – American Institute of Steel Construction
b. AISI – American Iron Steel Institute
c. ASTM – Applicable standards for structural steel, bolts, coatings, etc.
d. MBMA – Metal Building Manufacturers Association Metal Building Systems Manual

D. SUBMITTALS/SHOP DRAWINGS

1. Shop drawings shall be submitted on each manufactured item supplied under this Section along with other information as specified herein
2. Product Data – Manufacturer specifications for all materials and components.
3. Engineering Calculations – Signed and sealed professional engineer registered in project state
4. Certificates – Mill certificates confirming ASTM compliance
5. Warranty – 1 Year general workmanship warranty

E. QUALITY ASSURANCE

a. Manufacturer shall have a minimum of 10 years' experience producing red-iron steel structures.
b. Fabrication shall comply with AISC standards
c. Welders certified in accordance with AWS D1.1.

F. DELIVERY, STORAGE, HANDLING

a. Deliver materials in manufacturer's original packaging
b. Store, above grade, protected from moisture and deformation
c. Handle components to prevent bending, marring, or coating damage

G. PRODUCTS

a. Renegade Steel, Inc., or approved equal meeting all requirements of this specification.

b. MATERIALS
    i. Primary Framing: ASTM A36, A992, or A572 Grade 50 welded-plate red iron I-beam members.
    ii. Secondary Framing: Cold-formed Z-purlins and girts – ASTM A653, Grade 55 minimum, G90 galvanized coating. Eave struts, bracing, flange bracing as required.

c. ROOF CLADDING
    i. 26-Gauge minimum PBR-profile metal panels
    ii. Factory-applied SMP or Kynar 500 finish, color as selected by Owner.

d. FASTENERS
    i. Self-drilling, corrosion-resistant panel fasteners with factory-applied seals
    ii. Structural bolts ASTM A325 or A490 as required

e. TRIM AND ACCESSORIES
    i. Eave trim, rake trim, closures, sealants, ridge caps, and flashings.

f. COATINGS
    i. Primary framing: Red-oxide primer applied at factory
    ii. Field-touch-up paint supplied by manufacturer

H. DESIGN CRITERIA
a. Structure shall be engineered to meet the governing building code, including:
    i. Ground Snow Load, Wind Load, Seismic, Live Roof Load
b. Lean-to shall be designed as a fully integrated structural extension of the main building or freestanding support (as shown in plans).
c. Minimum roof slope – 1:12 unless otherwise noted.

I. FABRICATION
a. All fabrication shall be performed under controlled conditions by manufacturer.
b. Connections welded per AWS D1.1 and inspected prior to shipment.
c. Holes, clips, and support tabs shall be factory-punched or welded as shown on engineered drawings.

J. EXAMINATION
a. Verify building interfaces, slab elevations, and anchor bolt locations prior to erection.
b. Notify Engineer of discrepancies before proceeding.

K. INSTALLATION
a. Erect the lean-to structure in strict accordance with manufacturer instructions and approved shop drawings.
b. Set anchor bolts accurately and grout base plates after alignment
c. Install primary and secondary framing plumb, square, and properly braced
d. Install roof panels with required lap patters, fastener spacing, and closure strips
e. Seal all penetrations, labs, and transitions to provide a watertight structure

L. FIELD QUALITY CONTROL
a. Contractor shall visually verify welds, bolted connections, and frame alignments
b. Any damaged components shall be replaced at no extra cost to owner

M. CLEANING AND PROTECTIONS
a. Remove metal shavings, debris, and excess sealant from roof surfaces
b. Protect all finishes against damage until final acceptance

N. WARRANTY
a. Provide Manufacturer standard structural warranty and 1-year labor warranty.

END OF SECTION

SECTION 432311
SUBMERSIBLE WELL PUMPS

A. SCOPE

Under this heading shall be included the installation of the submersible well pumps as shown and described on the plans and as specified herein. The Contractor shall comply with all local codes and regulations of local utilities. He shall coordinate work necessary for the completion of utilities with local utility companies and cooperate with the companies as required.

B. REFERENCES

Hydraulic Institute: Current Standards.

1. HI 14.6: Hydrodynamic Pumps for Hydraulic Performance Acceptance Tests.
2. HI 11.6: Submersible Pump Tests

C. SHOP DRAWINGS/SUBMITTALS

Submittal data shall be provided to show compliance with these specifications, plans or other specifications that will influence the proper operation of the pump(s).

Standard submittal data for approval must consist of:

1. Pump Performance Curves.
2. Pump Outline Drawing.
3. Station Drawing for Accessories.
4. Electrical Motor Data.
5. Typical Installation Guides.
6. Technical Manuals and Parts List.
7. Printed Warranty.
8. Management system certificate ISO 9001.
9. Manufacturer's Equipment Storage Recommendations.
10. Manufacturer's Standard Recommended Start-Up Report Form.

Lack of the above requested submittal data is cause for rejection.

D. QUALIFICATION REQUIREMENTS

The manufacturer shall provide data on alternate equipment manufacturer's experience. Only Manufacturers with 10 or more years of experience who have furnished at least 5 similar lift stations shall be considered.

E. MATERIALS/PRODUCTS

The following submersible well pumps are to be provided and installed:

Henderson:

Pump: Grundfos **300S200-6B** 14B735C6 3” NPT 6” Motor 3x440/460/480 V 60 Hz
Duty Point: 250 gpm at 235’ TDH

Waterstone:
Pump: Grundfos **90S75-7** 93050597 3” NPT 4” Motor 3x440-460 V 60 Hz
Duty Point: 100 gpm at 223’ TDH

See attached technical data sheets and pump curves at the end of this specification.

Pressure Transducer:

For each pump/well, provide a submersible hydrostatic pressure transducer for continuous water level measurement in the well. The sensor shall be a 4–20 mA, loop-powered unit with 316 stainless steel housing, vented polyurethane submersible cable, and an accuracy of ±0.1% full scale or better. Pressure range shall be selected based on well depth (minimum 0–300 ft H_2O). The transducer shall be installed 2 feet above the pump discharge head and secured to the 3-inch stainless steel drop pipe using stainless steel bands or UV-rated ties at 10–20 foot intervals. The cable shall be routed inside a dedicated ¾" PVC conduit drop tube to prevent abrasion or entanglement during pump extraction.

The transducer cable shall terminate at the well cap using a liquid-tight cord grip, with the vent tube extended to a clean, dry location above grade and equipped with a desiccant vent cap. Connect the signal leads to the control panel or SCADA system for real-time level monitoring. Equipment shall be NEMA 6P / IP68 rated and suitable for continuous submersion in potable groundwater. Acceptable manufacturers include In-Situ, Keller, STS, Druck/GE, or approved equal.

F. EXECUTION/INSTALLATION

1. GENERAL
   Perform installation in accordance with Contract Documents and manufacturers specifications.

2. DELIVERY, STORAGE AND HANDLING
   Deliver, store and handle products to site under provisions of the Contract & Specifications

3. INSTALLATION EQUIPMENT
   Contractor shall furnish all tools, material, labor, and equipment necessary to install the submersible well pumps.

4. START-UP
   After installation, a pump station start-up shall be performed by the installing contractor under the supervision of the manufacture’s authorized representative. 2

days of field service shall be provided by an authorized, factory-trained representative of the pump manufacturer. Services shall include, but not be limited to, inspection of the completed pump station installation to ensure that it has been performed in accordance with the manufacturer's instructions and recommendations, supervision of all field-testing and activation of the Pump Manufacturer's Warranty. The test shall demonstrate to the satisfaction of the Owner that the equipment meets all specified performance criteria, is properly installed and anchored, and operates smoothly without exceeding the full load amperage rating of the motor. The Contractor shall be responsible for coordinating the required field services with the Pump Manufacturer.

5. FACTORY TRAIED SUPERVISION
   The contractor shall procure a factory trained technician to inspect equipment prior to putting the equipment into operation.

   Contractor to provide point to point test of all wiring.

   Functional test of all equipment alarms and controls.

6. WARRANTY
   When installed in accordance with all the provisions of this section, related sections and the supplier's installation manual, the warranty on the Monitoring and Control equipment shall be 12 months. The warranty period shall start from the date of equipment delivery to the job site.

Henderson

Submittal Data

PROJECT:	UNIT TAG:	QUANTITY:
	TYPE OF SERVICE:	
REPRESENTATIVE:	SUBMITTED BY:	DATE:
ENGINEER:	APPROVED BY:	DATE:
CONTRACTOR:	ORDER NO.:	DATE:



Note! Product picture may differ from actual product

300S200-6B

Submersible pumps in stainless steel. EN 1.4301 (AISI 304). EN 1.4401 (AISI 316). EN 1.4539 (AISI 904L). Typical application: Ground water, Irrigation, Mining, Fountain, Off-shore etc.

Conditions of Service	
Flow:	277 US GPM
Head:	235 ft
Efficiency:	61.1 %
Liquid:	Water
NPSH required:	20.93 ft

Pump Data	
Liquid temperature range:	5 .. 104 °F
Product number:	14B735C6

Motor Data	
Rated power - P2:	20 HP
Rated voltage:	440-460-480 V
Mains frequency:	60 Hz
Enclosure class:	IP68
Insulation class:	F
Motor protection:	NONE
Thermal protection:	external
Motor type:	MS6000

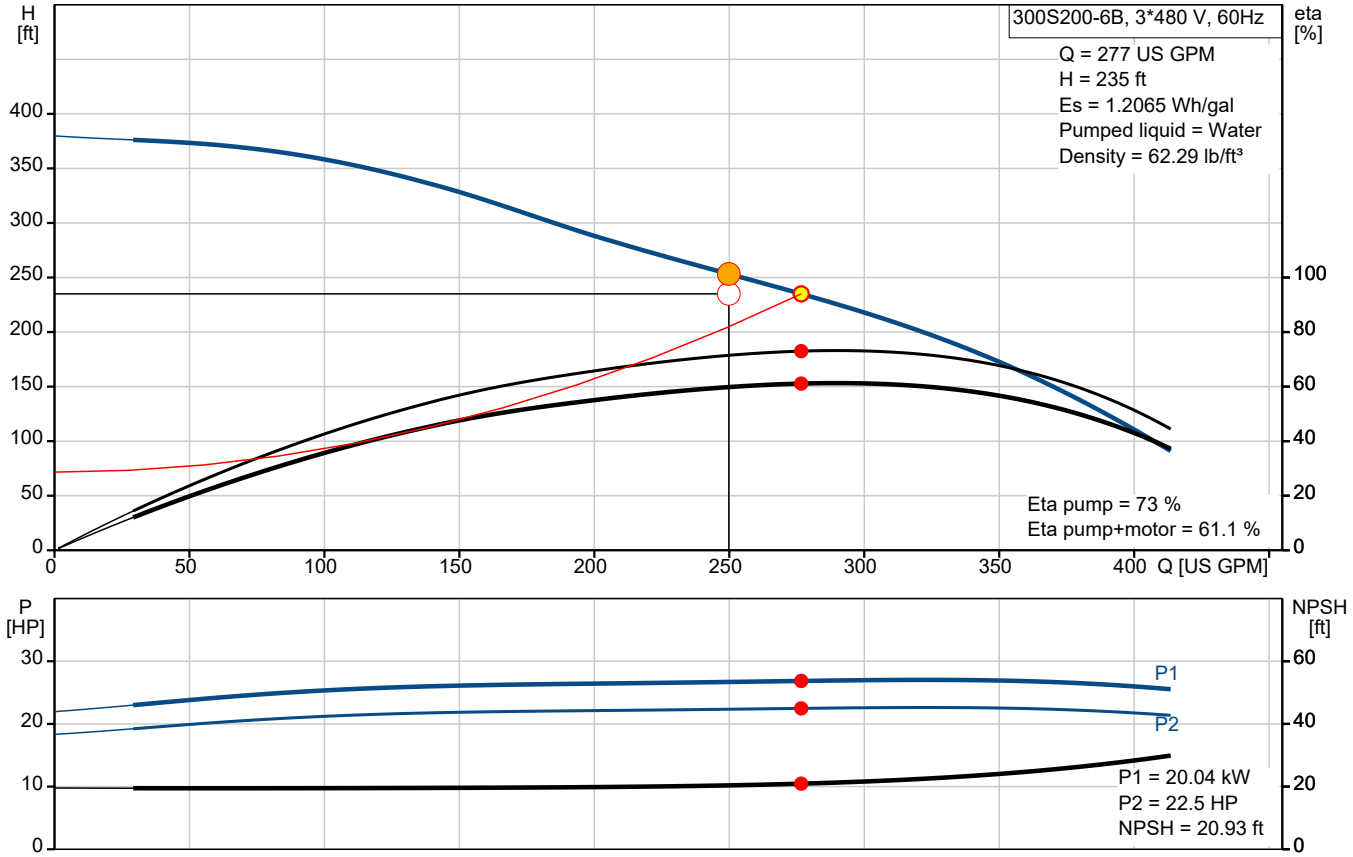

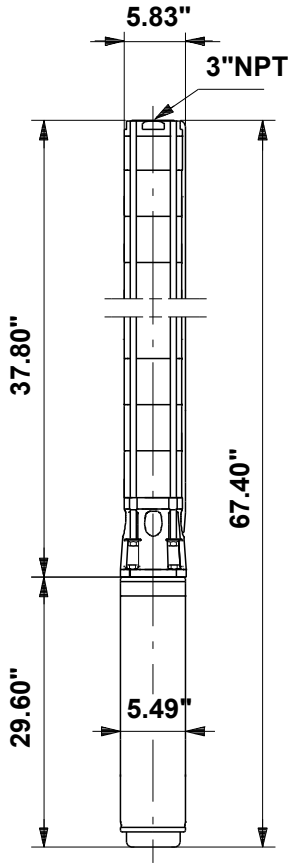

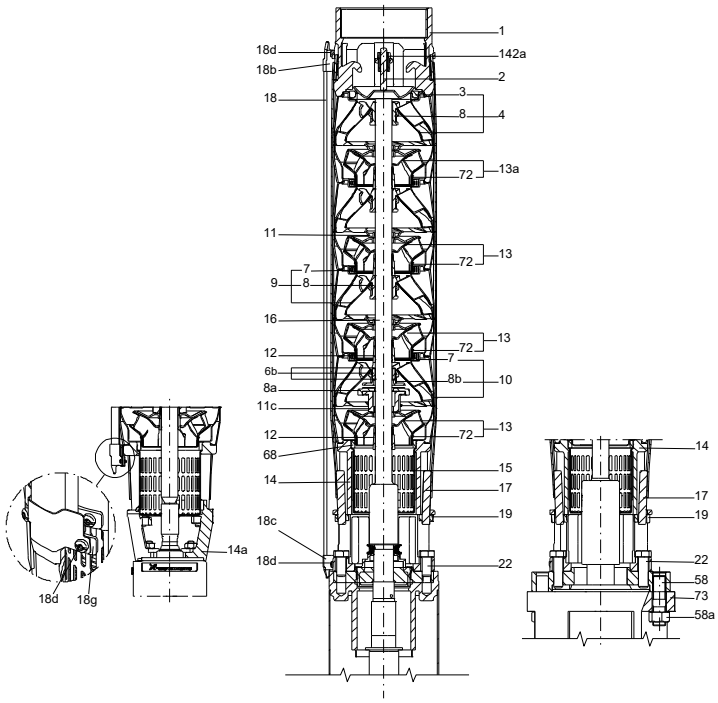

Materials:

Impeller:	Stainless steel AISI 304 EN 1.4301
Motor:	Stainless steel DIN W.-Nr. 1.4301 AISI 304

Company name:
Created by:
Phone:

Date: 03/10/2025

14B735C6 300S200-6B 60 Hz

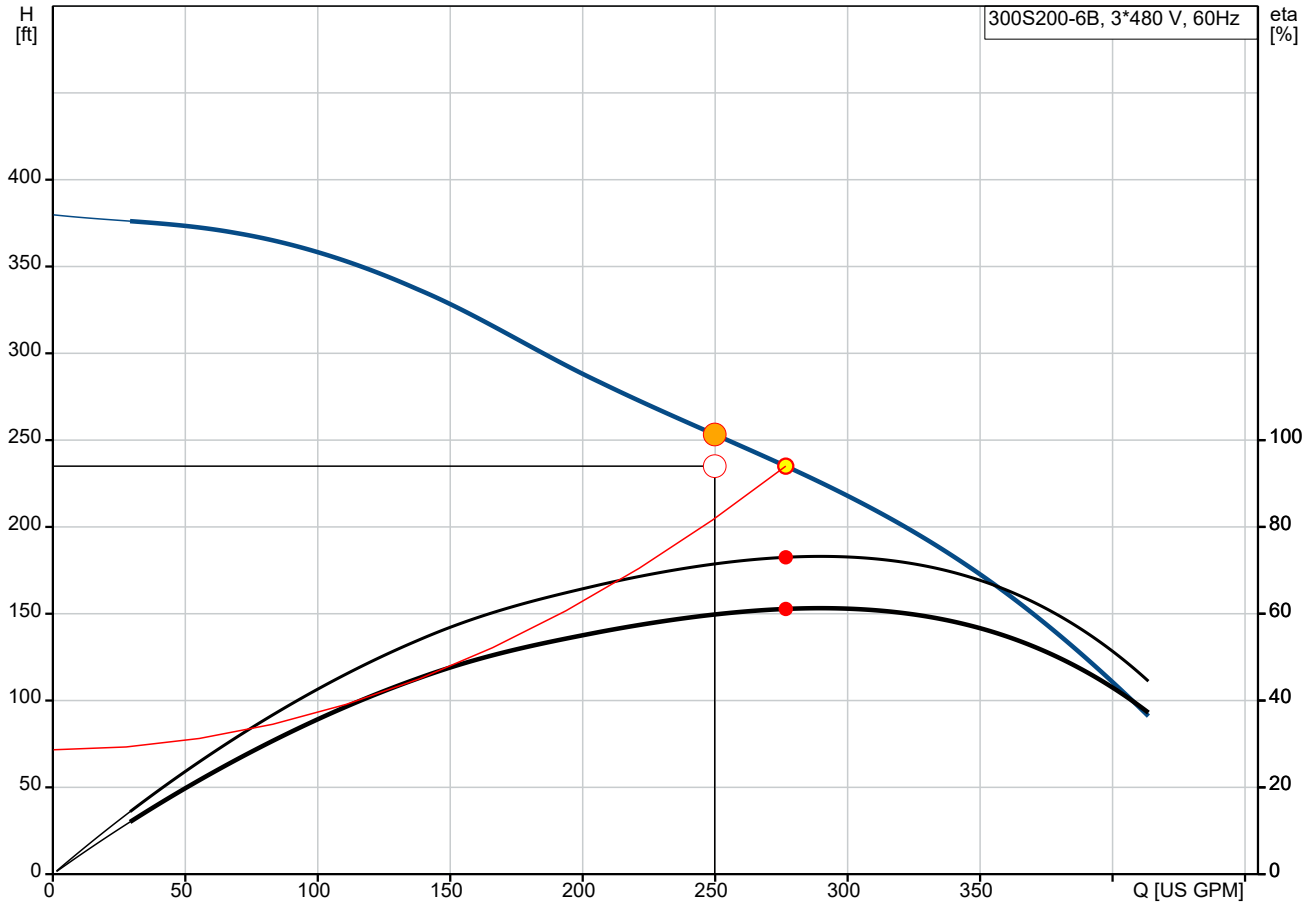

Q = 277 US GPM
Es = 1.2065 Wh/gal
Density = 62.29 lb/ft³
Eta pump+motor = 61.1 %

H = 235 ft
Pumped liquid = Water
Eta pump = 73 %

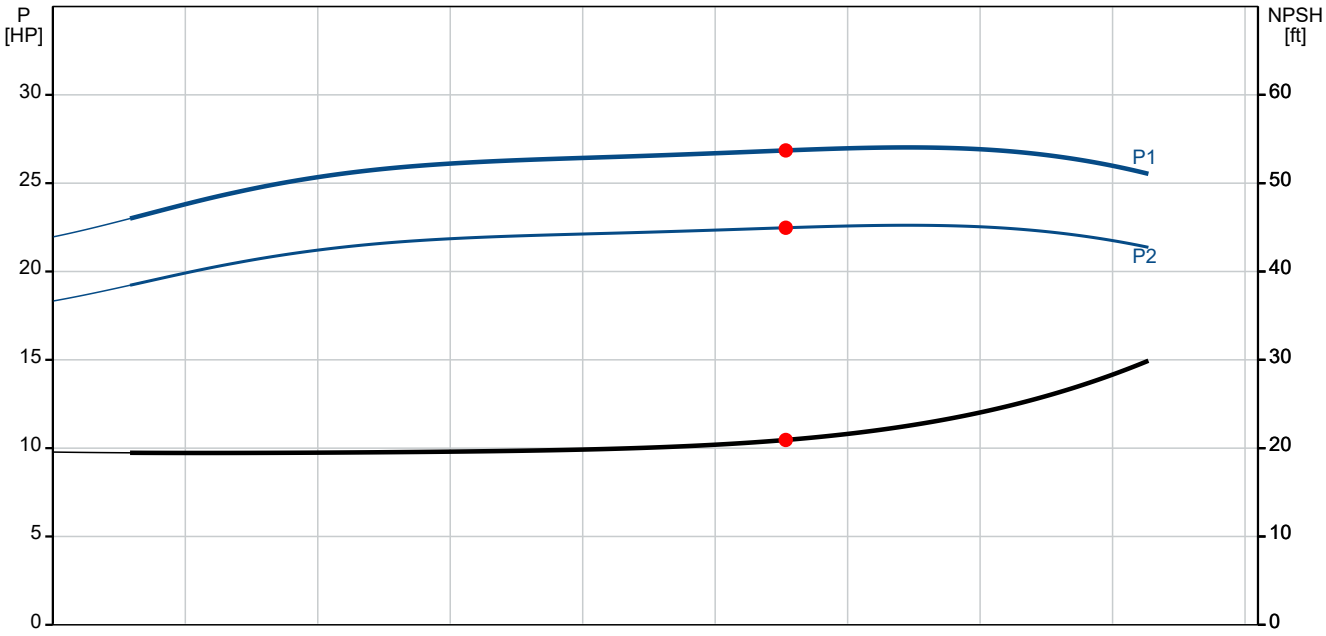

P1 = 20.04 kW
P2 = 22.5 HP
NPSH = 20.93 ft

Company name:
Created by:
Phone:

Date: 03/10/2025

Description	Value
General information:	
Product name:	300S200-6B
Product No:	14B735C6
EAN number:	5700393985872
Technical:	
Pump speed on which pump data are based:	3450 rpm
Actual calculated flow:	277 US GPM
Rated flow:	317 US GPM
Resulting head of the pump:	235 ft
Rated head:	196.9 ft
Stages:	6
Number of reduced-diameter impellers:	B
Shaft seal for motor:	SIC/SICNBR
Approvals:	CULDWUS,CCSAUS
Approvals for drinking water:	PROP65
Curve tolerance:	ISO9906:2012 3B
Model:	B
Motor version:	T40
Return valve:	YES
Materials:	
Pump:	Stainless steel
	EN 1.4301
	AISI 304
Impeller:	Stainless steel
	EN 1.4301
	AISI 304
Motor:	Stainless steel
	DIN W.-Nr. 1.4301
	AISI 304
Installation:	
Maximum ambient pressure:	870.23 psi
Maximum operating pressure:	870.23 psi
Maximum outlet pressure:	169.69 psi
Type of connection:	NPT(F)
Size of connection:	3 inch
Motor diameter:	6 inch
Minimum borehole diameter:	6.1 in
Liquid:	
Pumped liquid:	Water
Liquid temperature range:	5 .. 104 °F
Max liquid t at 0.15 m/sec:	104 °F
Electrical data:	
Motor type:	MS6000
Motor flange design:	Grundfos
Rated power - P2:	20 HP
Power (P2) required by pump:	20 HP
KVA code:	J
Mains frequency:	60 Hz
Rated voltage:	3 x 440-460-480 V
Service factor:	1.15
Rated current:	33.5-32.5-32.0 A
Requested voltage:	480 V
Rated current at this voltage:	32.5 A
Starting current:	520-570-610 %
Cos phi - power factor:	0.85-0.84-0.81
Rated speed:	3450-3470-3480 rpm

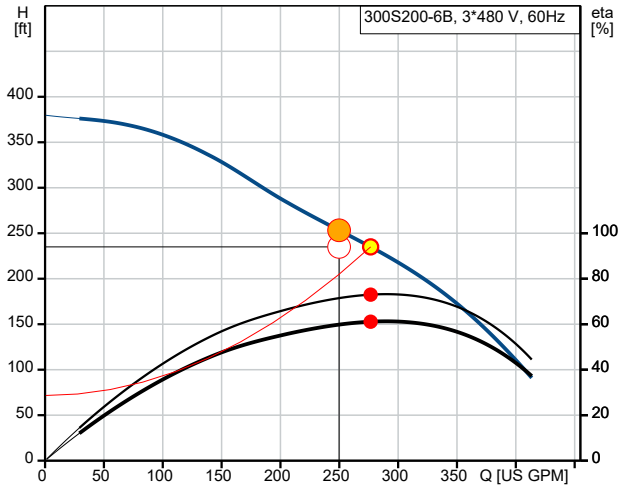

Q = 277 US GPM
Es = 1.2065 Wh/gal
Density = 62.29 lb/ft³
Eta pump+motor = 61.1 %

H = 235 ft
Pumped liquid = Water
Eta pump = 73 %

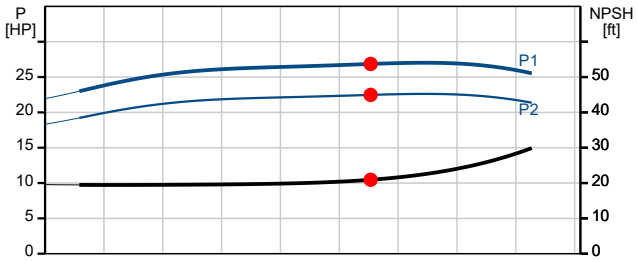

P1 = 20.04 kW
P2 = 22.5 HP
NPSH = 20.93 ft

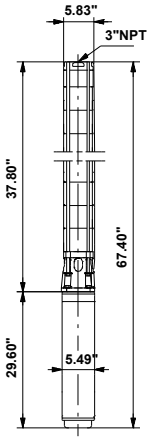

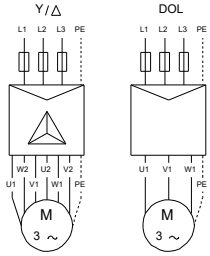

U1, W2	Brown
V1, U2	Black
W1, V2	Grey

GRUNDFOS

Company name:
Created by:
Phone:

Date: 03/10/2025

Description	Value
Start. method:	direct-on-line
Enclosure class (IEC 34-5):	IP68
Insulation class (IEC 85):	F
Built-in motor protection:	NONE
Thermal protec:	external
Built-in temp. transmitter:	yes
Motor No:	96166166
Cable number:	N/A
Windings:	Enamelled
Others:	
Minimum efficiency index, MEI ≥:	-.--
DOE Pump Energy Index CL:	0.92
Net weight:	169 lb
Gross weight:	235 lb
Shipping volume:	8.19 ft³
Country of origin:	US
Custom tariff no.:	8413.70.2004

Company name:
Created by:
Phone:

Date: 03/10/2025

14B735C6 300S200-6B 60 Hz

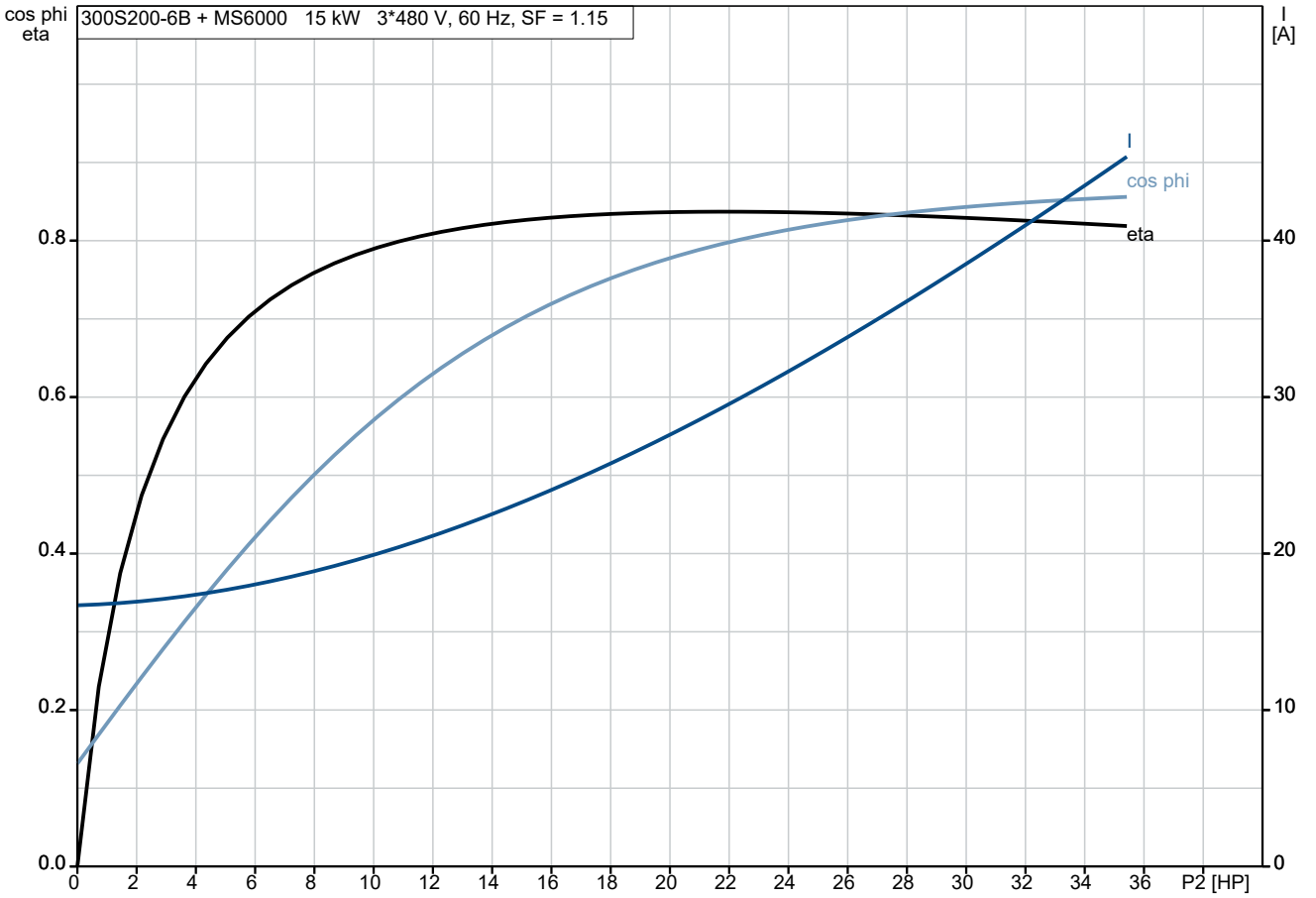

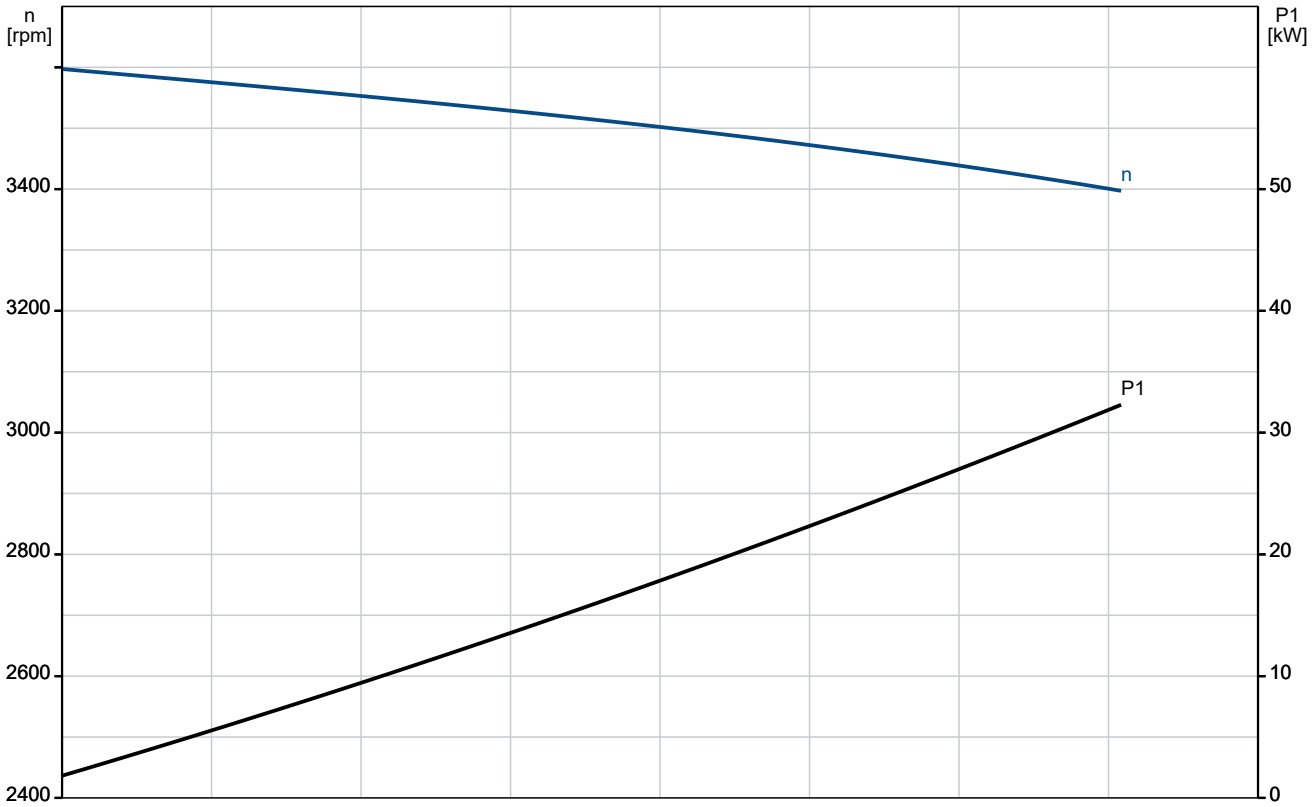

GRUNDFOS

Company name:
Created by:
Phone:

Date: 03/10/2025

14B735C6 300S200-6B 60 Hz

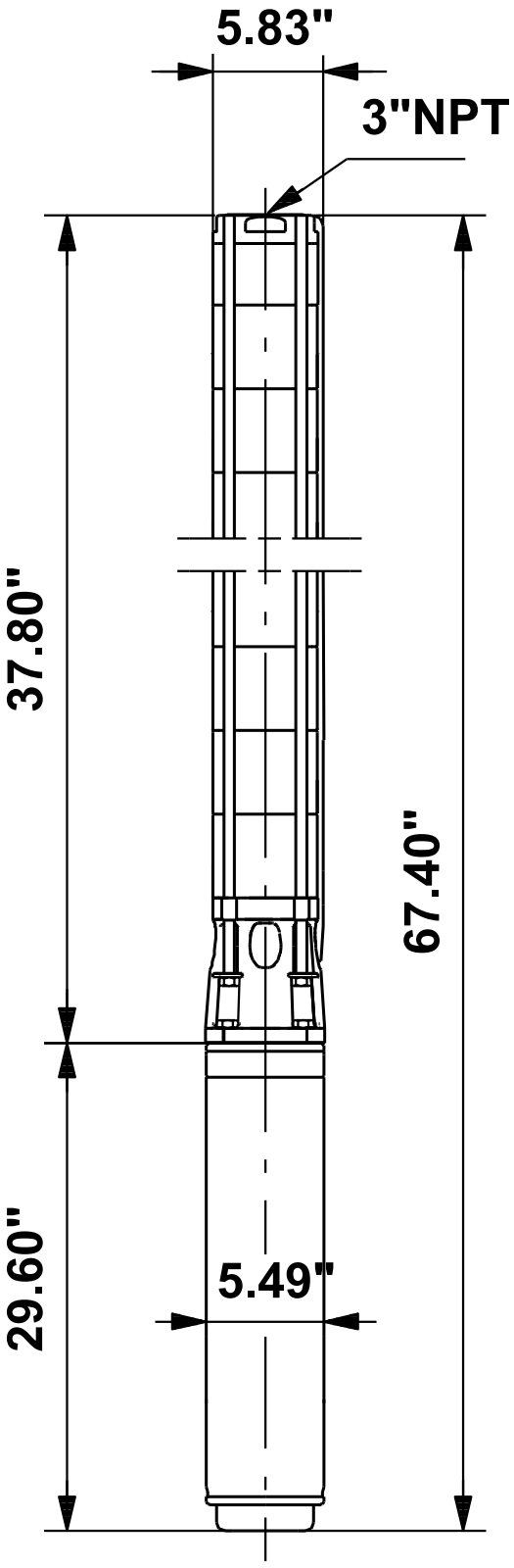

Note! All units are in [in] unless others are stated.
Disclaimer: This simplified dimensional drawing does not show all details.

14B735C6 300S200-6B 60 Hz

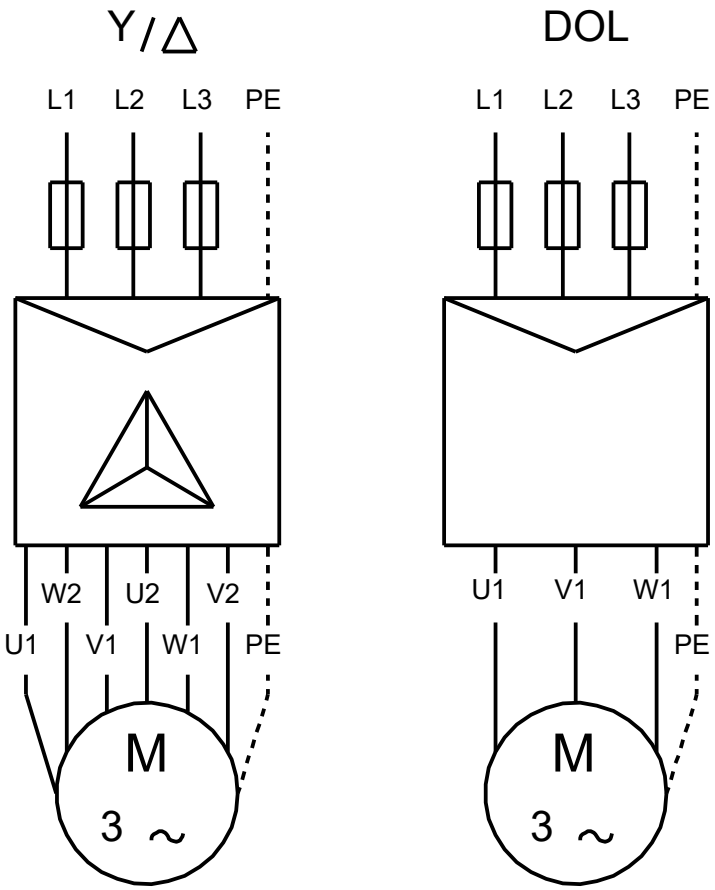

U1, W2	Brown
V1, U2	Black
W1, V2	Grey

Note! All units are in [in] unless others are stated.

Company name:
Created by:
Phone:

Date: 03/10/2025

Installation and Input

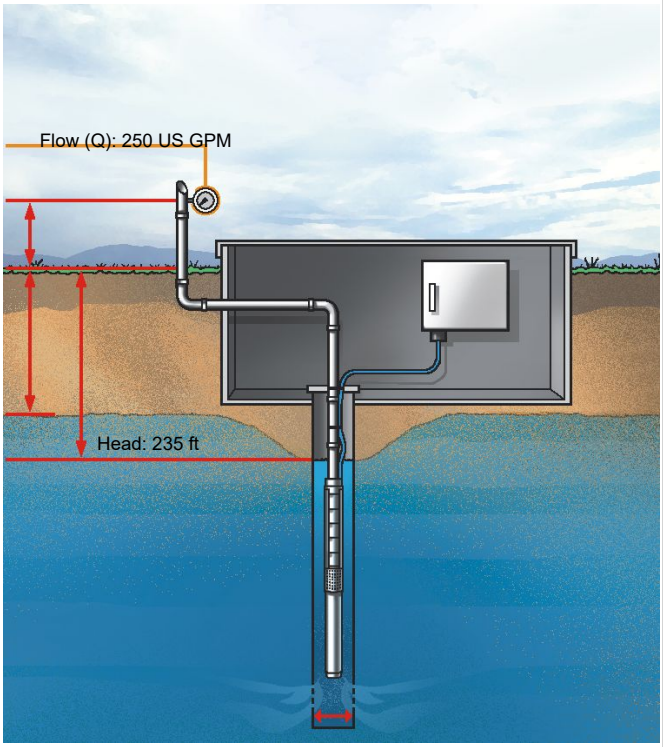

Sizing Results

Product number:	14B735C6
Type:	300S200-6B
Flow:	277 US GPM (54755710)
H total:	235 ft
Power P1:	20.04 kW
Power P2 required in the duty point:	22.5 HP
Eta pump:	73.0 %
Eta motor:	83.7 %
Eta total:	61.1 %
Energy consumption:	72707 kWh/year
Spec. energy consumption:	1.328 kWh/1000 gal (4.25 kWh/gal/ft)
Motor type:	MS6000
Phase:	3
Voltage:	440-460-480
Frequency:	60 Hz
Current (rated):	32 A
Current (actual):	30 A
Cos phi (actual):	0.80
Liquid max. temperature:	104 °F

Cable losses are not included !

Load profile

	1
Flow (%)	100
Flow (US gpm)	250
Head (%)	108
Head (ft)	253.2
P1 (kW)	19.92
Eta total (%)	59.8
Time (h/a)	3650
Energy consumption (kWh/Year)	72707
Quantity	1

Pump Curve

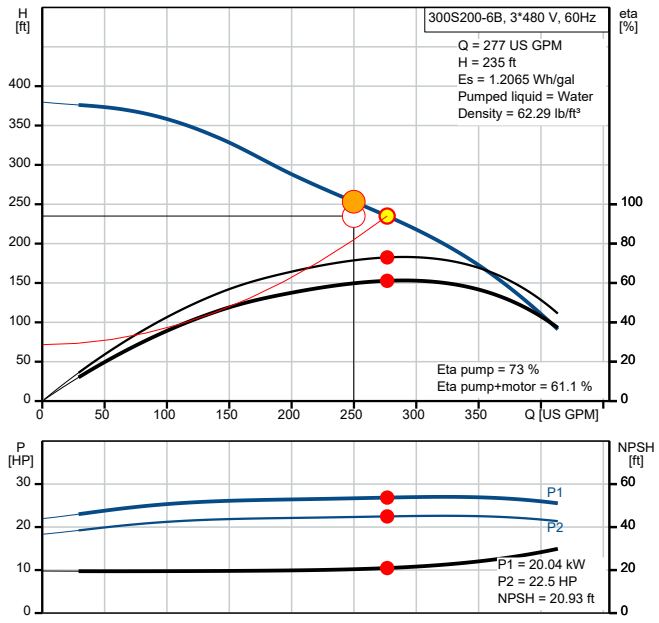

Dimensional Drawing

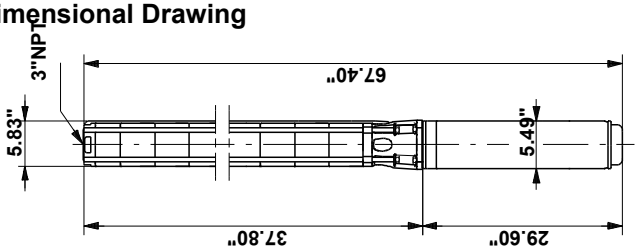

Waterstone

Submittal Data

PROJECT:	UNIT TAG:	QUANTITY:
	TYPE OF SERVICE:	
REPRESENTATIVE:	SUBMITTED BY:	DATE:
ENGINEER:	APPROVED BY:	DATE:
CONTRACTOR:	ORDER NO.:	DATE:



Note! Product picture may differ from actual product

90S75-7

Submersible pumps in stainless steel. EN 1.4301 (AISI 304). EN 1.4401 (AISI 316). EN 1.4539 (AISI 904L). Typical application: Ground water, Irrigation, Mining, Fountain, Off-shore etc.

Conditions of Service	
Flow:	105 US GPM
Head:	223 ft
Efficiency:	59.6 %
Liquid:	Water
NPSH required:	23.56 ft

Pump Data	
Liquid temperature range:	5 .. 104 °F
Product number:	93050597

Motor Data	
Mains frequency:	60 Hz
Enclosure class:	IP68

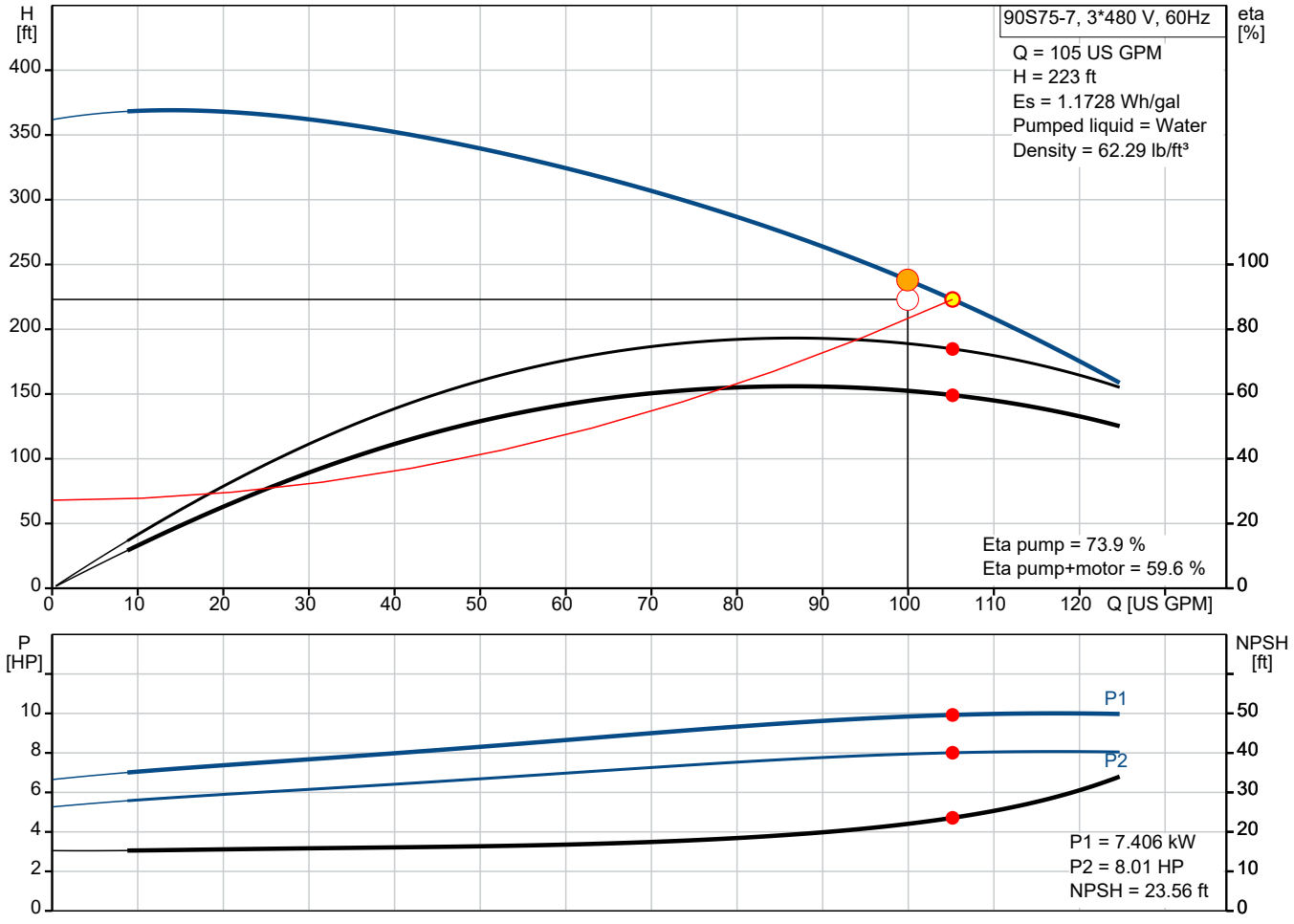

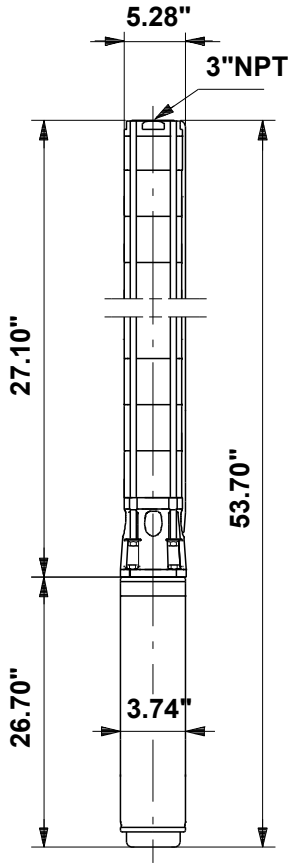

Materials:

Impeller: Stainless steel
AISI 304
EN 1.4301

GRUNDFOS

Company name:
Created by:
Phone:

Date: 03/10/2025

93050597 90S75-7 60 Hz

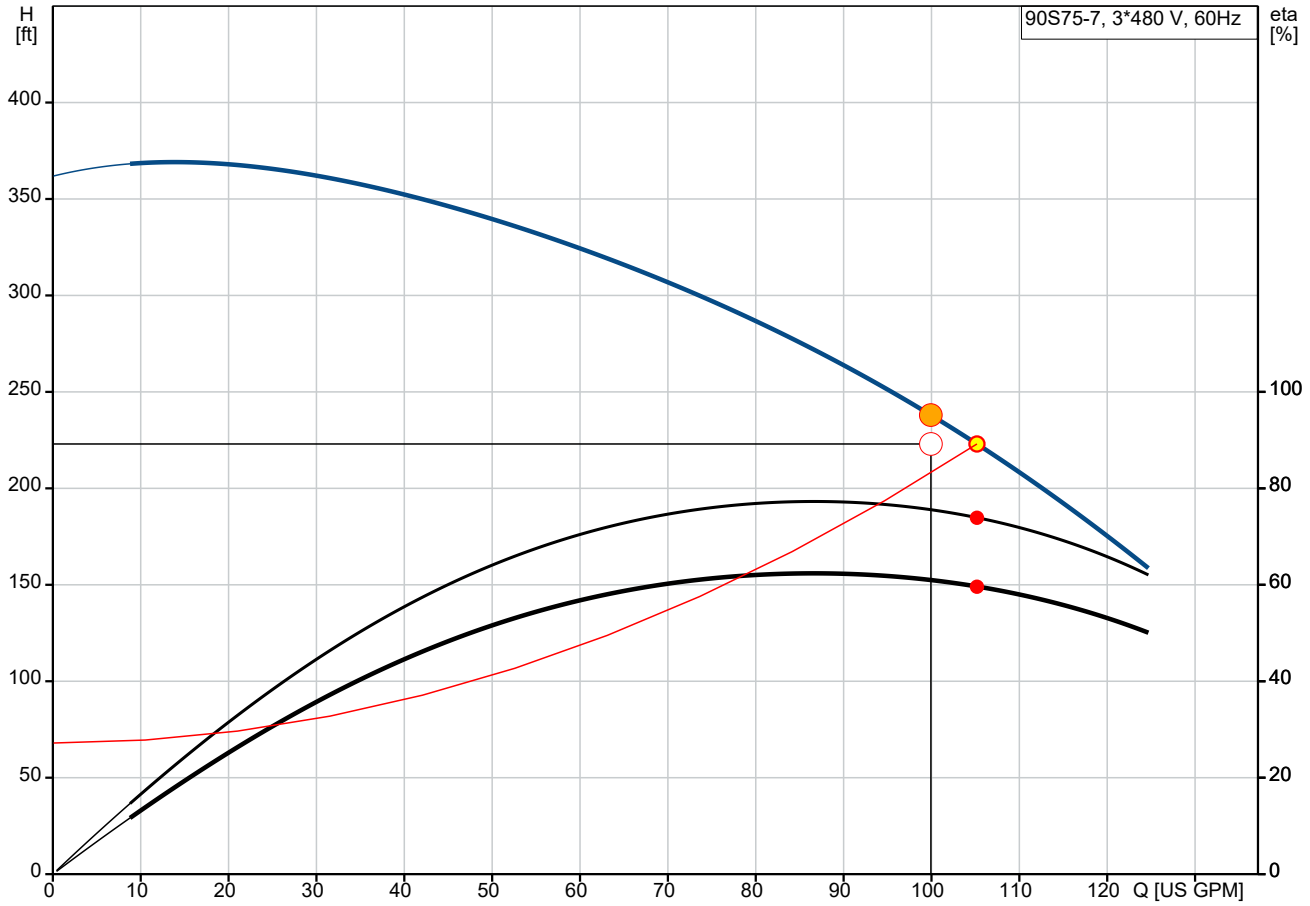

Q = 105 US GPM
Es = 1.1728 Wh/gal
Density = 62.29 lb/ft³
Eta pump+motor = 59.6 %

H = 223 ft
Pumped liquid = Water
Eta pump = 73.9 %

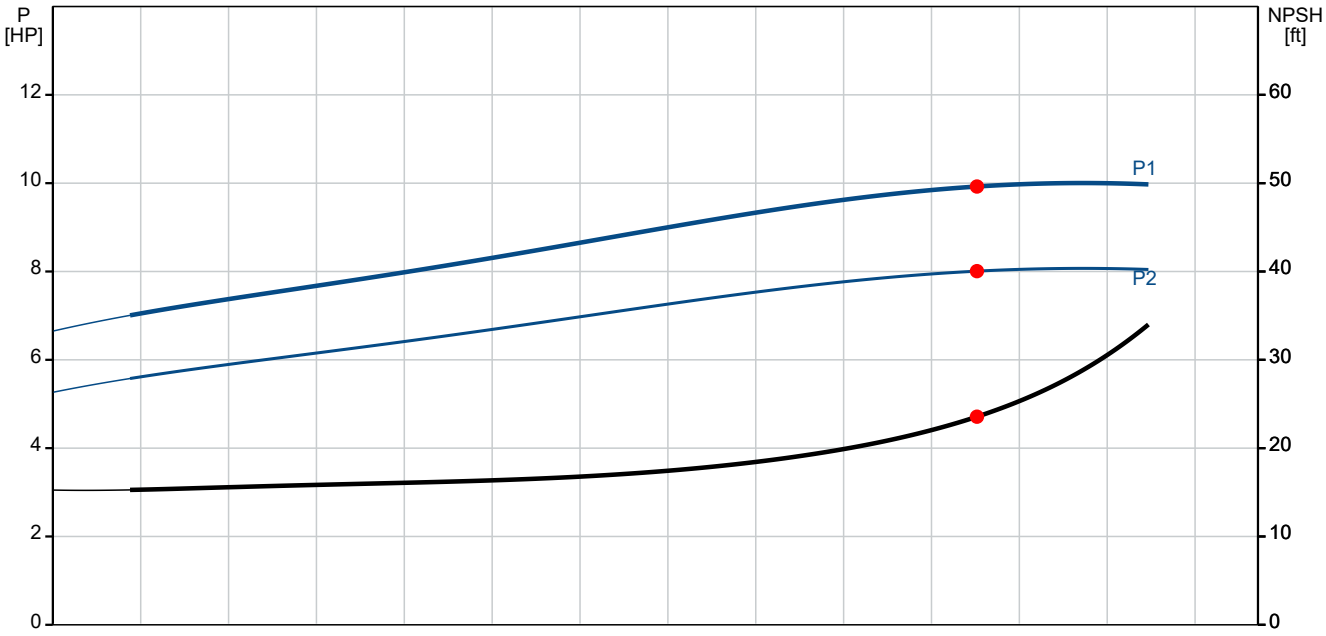

P1 = 7.406 kW
P2 = 8.01 HP
NPSH = 23.56 ft

Company name:
Created by:
Phone:

Date: 03/10/2025

Description	Value
General information:	
Product name:	90S75-7
Product No:	93050597
EAN number:	5715467047202
Technical:	
Pump speed on which pump data are based:	3450 rpm
Actual calculated flow:	105 US GPM
Rated flow:	96.9 US GPM
Resulting head of the pump:	223 ft
Rated head:	242.8 ft
Stages:	7
Number of reduced-diameter impellers:	NONE
Approvals:	CULDWUS,CCSAUS
Approvals for motor:	CCSAUS,C_UL_US_NSF 372
Approvals for drinking water:	PROP65
Curve tolerance:	ISO9906:2012 3B
Model:	B
Motor version:	T40
Return valve:	YES
Materials:	
Pump:	Stainless steel
	EN 1.4301
	AISI 304
Impeller:	Stainless steel
	EN 1.4301
	AISI 304
Motor:	Stainless steel
	EN 1.4301
	AISI 304
Shaft seal:	HM/Ceramics
Installation:	
Maximum ambient pressure:	870.23 psi
Maximum operating pressure:	870.23 psi
Maximum outlet pressure:	162.44 psi
Type of connection:	NPT(F)
Size of connection:	3 inch
Motor diameter:	4 inch
Minimum borehole diameter:	5.51 in
Liquid:	
Pumped liquid:	Water
Liquid temperature range:	5 .. 104 °F
Electrical data:	
Motor type:	MS4000
Motor flange design:	Grundfos
Rated power - P2:	7.5 HP
Power (P2) required by pump:	7.5 HP
KVA code:	J
Mains frequency:	60 Hz
Rated voltage:	3 x 440-460 V
Service factor:	1.15
Rated current:	11.4-11.7 A
Starting current:	560-580 %
Cos phi - power factor:	0.84-0.79
Rated speed:	3460-3480 rpm
Maximum axial load:	992 lb
Method of start:	Direct-on-line (DOL)

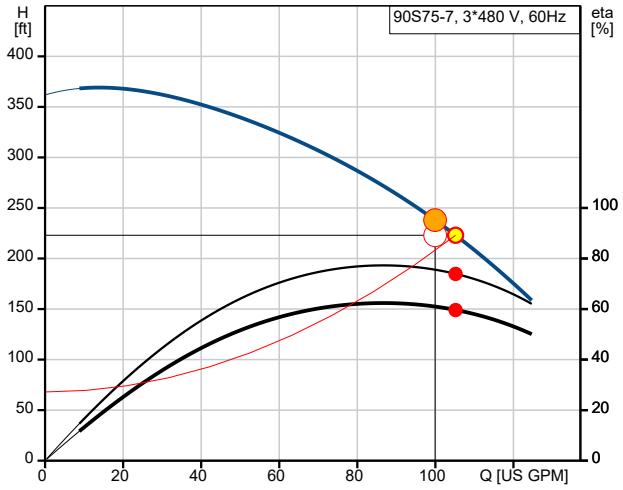

Q = 105 US GPM
Es = 1.1728 Wh/gal
Density = 62.29 lb/ft³
Eta pump+motor = 59.6 %

H = 223 ft
Pumped liquid = Water
Eta pump = 73.9 %

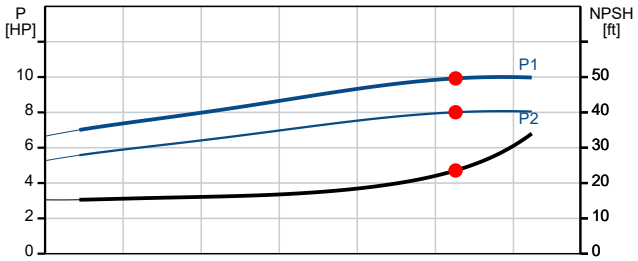

P1 = 7.406 kW
P2 = 8.01 HP
NPSH = 23.56 ft

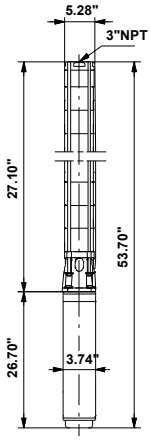

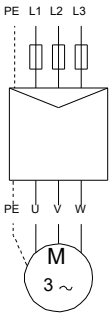

GRUNDFOS

Company name:
Created by:
Phone:

Date: 03/10/2025

Description	Value
Enclosure class (IEC 34-5):	IP68
Insulation class (IEC 85):	F
Ex-protection standard:	NONE
Thermal protection:	External
Built-in temp. transmitter:	Yes
Motor No:	92959963
Cable number:	N/A
Windings:	Enameled
Others:	
DOE Pump Energy Index CL:	0.84
Net weight:	88.9 lb
Gross weight:	98.8 lb
Shipping volume:	1.84 ft³

GRUNDFOS

Company name:
Created by:
Phone:

Date: 03/10/2025

93050597 90S75-7 60 Hz

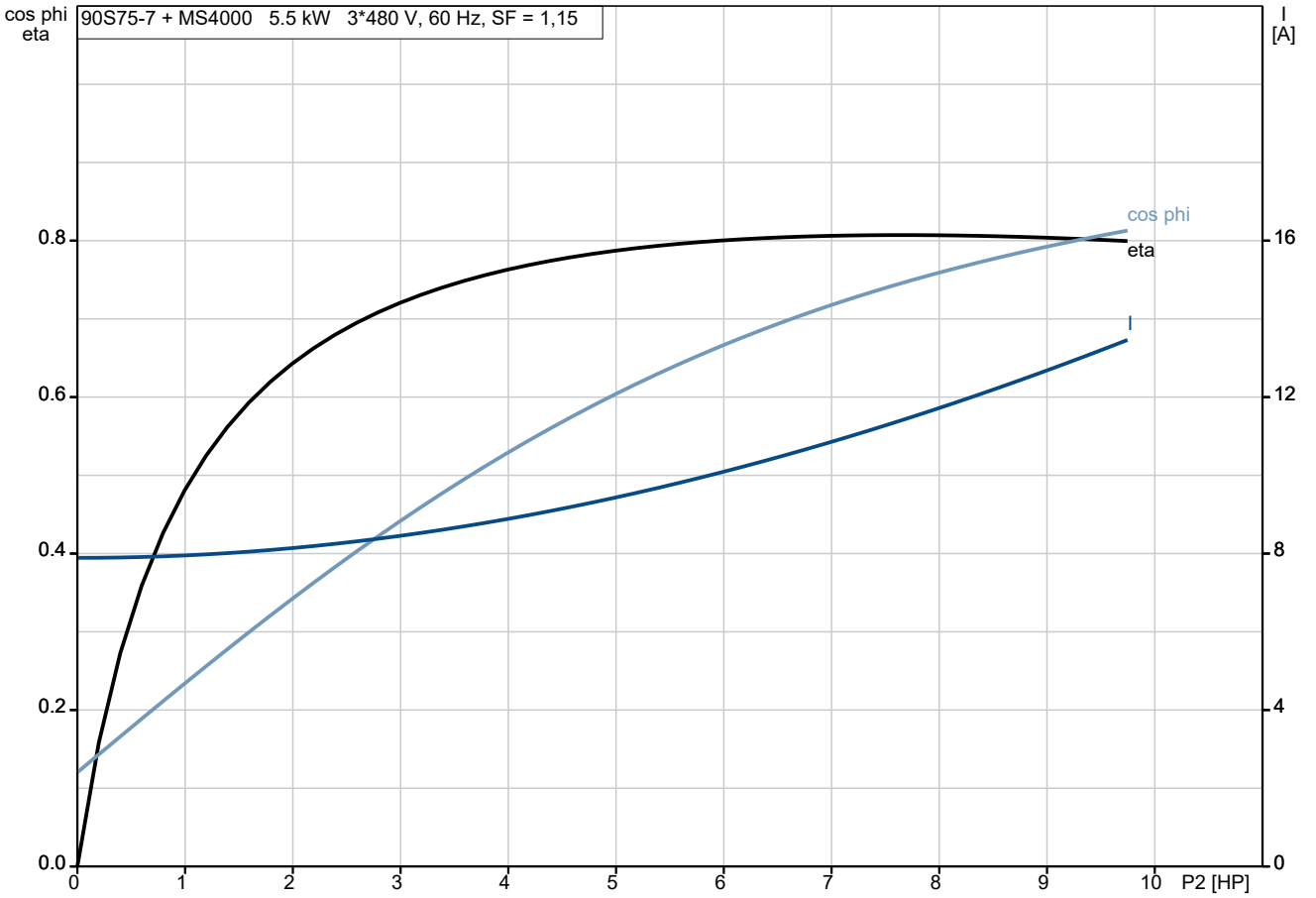

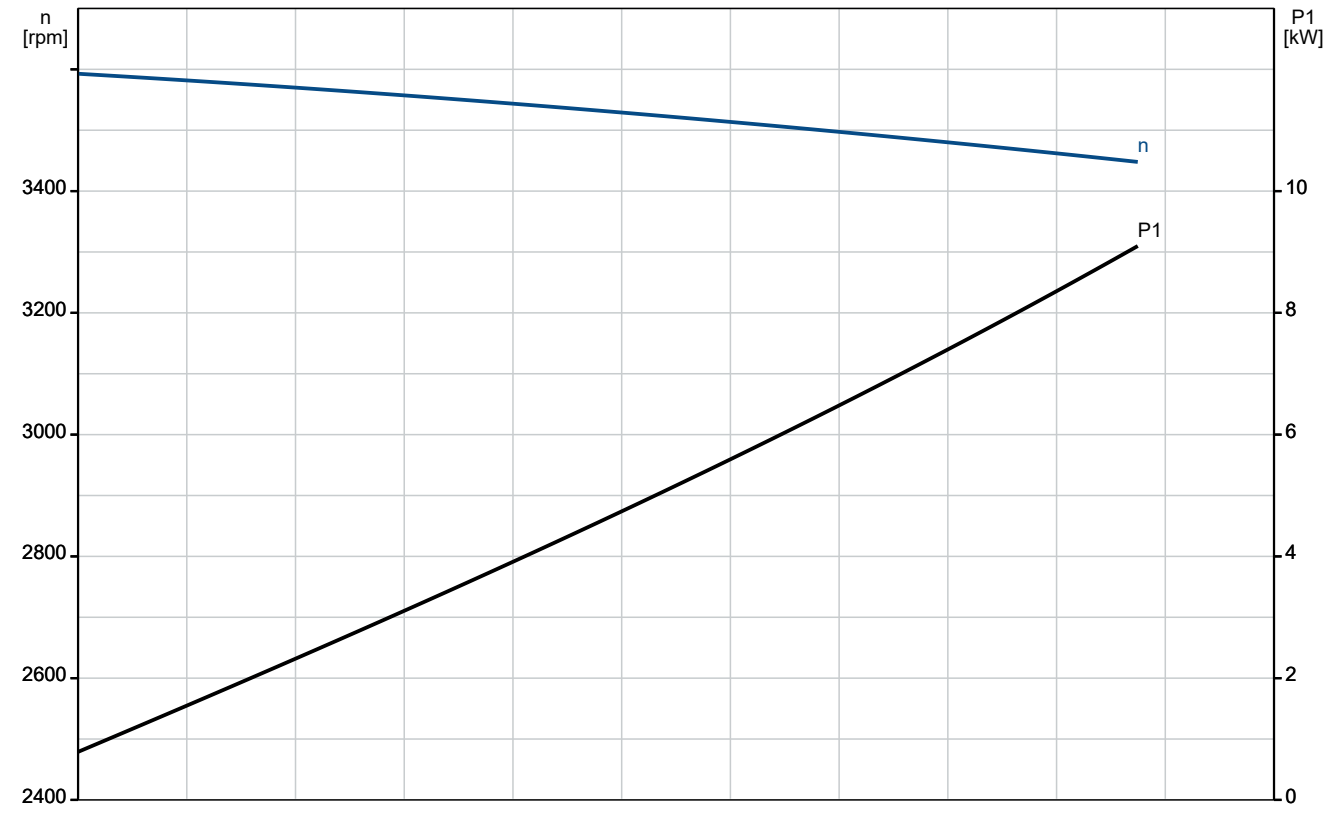

GRUNDFOS

Company name:
Created by:
Phone:

Date: 03/10/2025

93050597 90S75-7 60 Hz

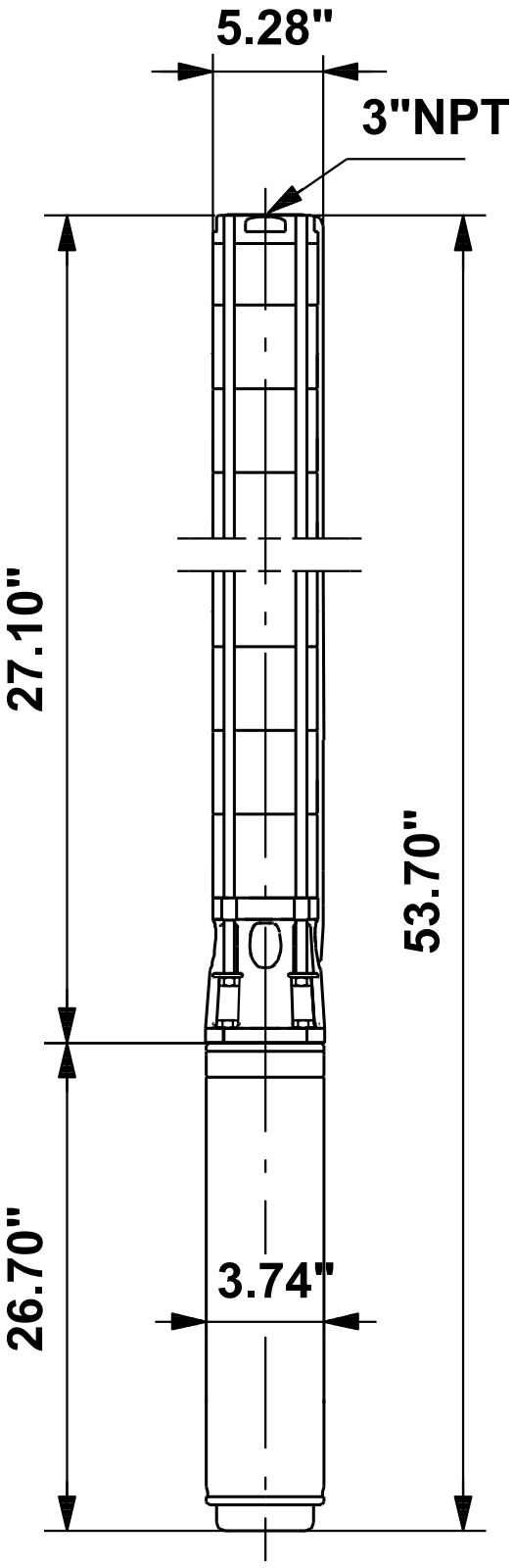

Note! All units are in [in] unless others are stated.
Disclaimer: This simplified dimensional drawing does not show all details.

93050597 90S75-7 60 Hz

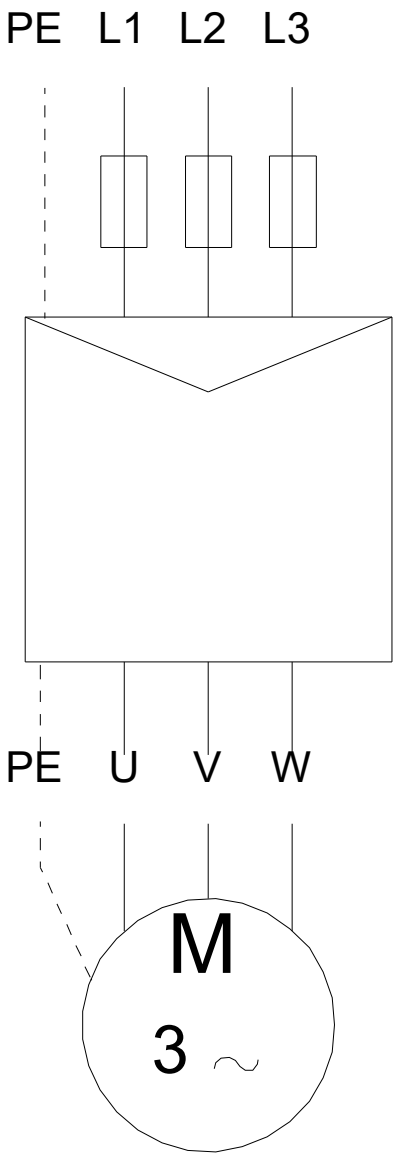

Note! All units are in [in] unless others are stated.

Company name:
Created by:
Phone:

Date: 03/10/2025

Installation and Input

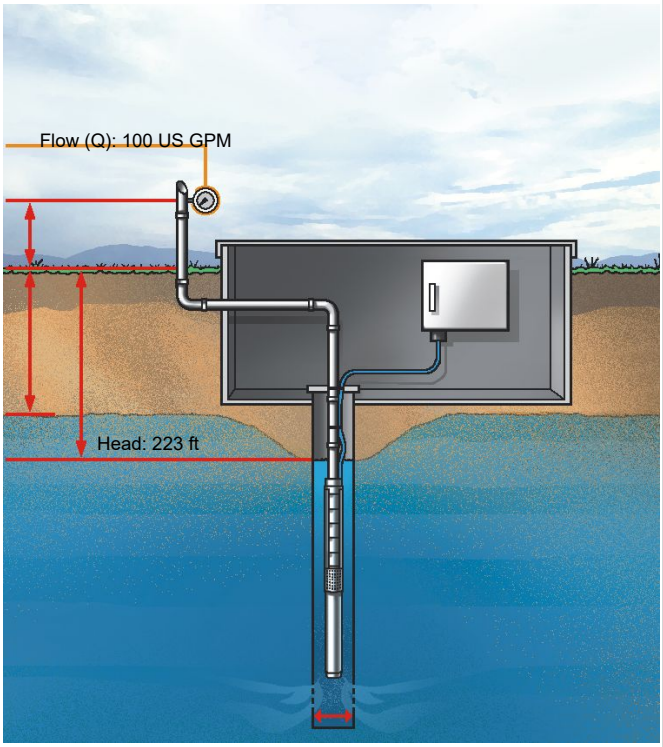

Sizing Results

Product number:	93050597
Type:	90S75-7
Flow:	105 US GPM (21902440)
H total:	223 ft
Power P1:	7.406 kW
Power P2 required in the duty point:	8.01 HP
Eta pump:	73.9 %
Eta motor:	80.7 %
Eta total:	59.6 %
Energy consumption:	26811 kWh/year
Spec. energy consumption:	1.2242 kWh/1000 gal (4.12 kWh/gal/ft)
Motor type:	MS4000
Phase:	3
Voltage:	440-460
Frequency:	60 Hz
Current (rated):	11.4 A
Current (actual):	11.7 A
Cos phi (actual):	0.76
Liquid max. temperature:	104 °F

Cable losses are not included !

Load profile

	1
Flow (%)	100
Flow (US gpm)	100
Head (%)	107
Head (ft)	238
P1 (kW)	7.345
Eta total (%)	61.0
Time (h/a)	3650
Energy consumption (kWh/Year)	26811
Quantity	1

Pump Curve

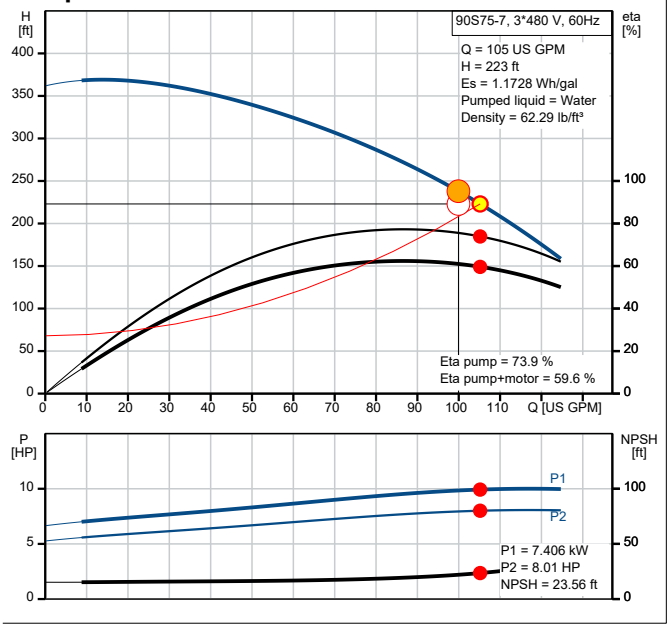

Dimensional Drawing

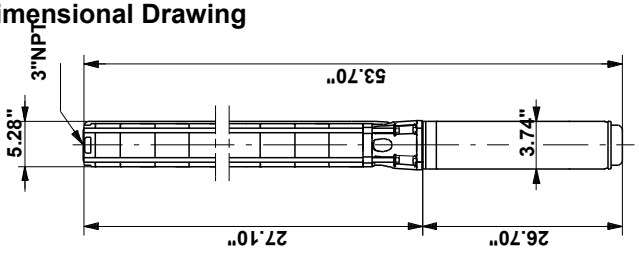

APPENDIX A

GEOTECHNICAL ENGINEERING RPEORT

Drinking Water Site

Geotechnical Engineering Report

April 3, 2025 | Terracon Project No. HN255025

Prepared for:

ESG Engineering Inc.
6400 Peake Road
Macon, GA 31210

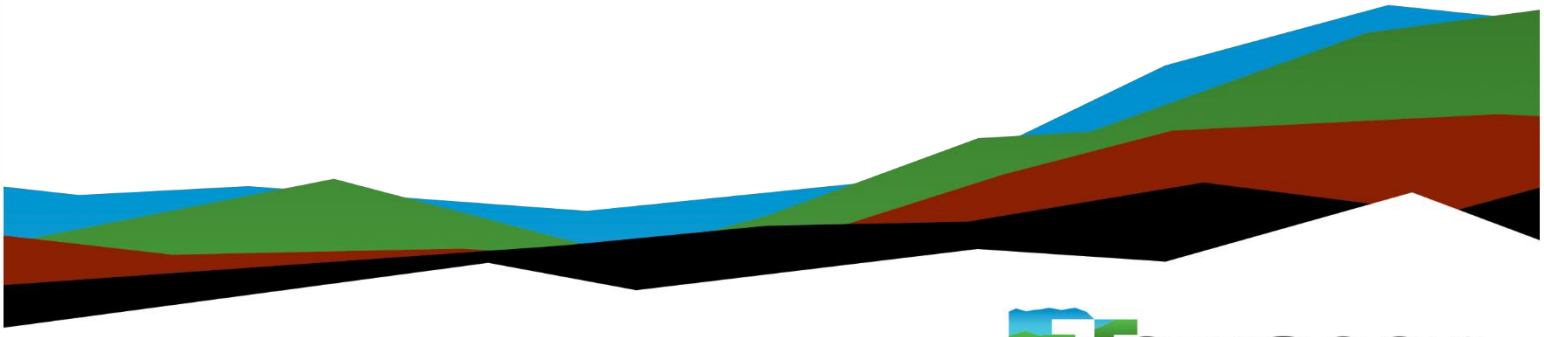

Terracon
Explore with us

Nationwide
Terracon.com

- Facilities
- Environmental
- Geotechnical
- Materials

514 Hillcrest Industrial Boulevard
Macon, GA 31204
P (478) 757-1606
Terracon.com

April 3, 2025

ESG Engineering Inc.
6400 Peake Road
Macon, GA 31210

Attn: Trey Crisp, RLA
P: (478) 335-4612
E: Trey.crisp@inframark.com

Re: Geotechnical Engineering Report
Drinking Water Site
Atlanta Highway
Flowery Branch, Georgia
Terracon Project No. HN255025

Dear Mr. Crisp:

We have completed the scope of Geotechnical Engineering services for the above referenced project in general accordance with Terracon Proposal No. PHN255025 dated February 5, 2025. This report presents the findings of the subsurface exploration and provides geotechnical recommendations concerning earthwork, pavement, and the design and construction of foundations and floor slabs for the proposed project.

We appreciate the opportunity to be of service to you on this project. If you have any questions concerning this report or if we may be of further service, please contact us.

Sincerely,

Terracon

GEORGIA REGISTERED No. 17394 PROFESSIONAL ENGINEER THOMAS E. DRIVER

Sai Subhash Teja Deevi, E.I.T.
Geotechnical Staff Engineer

Thomas E. Driver, P.E.
Director of Georgia Regional Operations

Table of Contents

Report Summary **4**
Introduction **1**
Project Description **1**
Site Conditions **2**
Geotechnical Characterization **3**
Groundwater 3
Seismic Site Class **4**
Site Geology **5**
Geotechnical Overview **5**
Earthwork **6**
Site Preparation 6
Subgrade Preparation 7
Excavation 8
Soil Stabilization 8
Fill Material Types 8
Fill Placement and Compaction Requirements 9
Utility Trench Backfill 10
Grading and Drainage 10
Earthwork Construction Considerations 11
Construction Observation and Testing 12
Foundations **12**
Helical Piles 13
Floor Slabs **13**
Floor Slab Design Parameters 13
Floor Slab Construction Considerations 14
Pavements **14**
Subgrade Preparation 14
Pavement Design Considerations 15
Estimates of Minimum Pavement Thickness 16
Pavement Drainage 18
Pavement Maintenance 18
General Comments **18**

Figures

GeoModel

Attachments

Exploration and Testing Procedures
Site Location and Exploration Plans
Exploration Results
Supporting Information

Note: This report was originally delivered in a web-based format. **Blue Bold** text in the report indicates a referenced section heading. The PDF version also includes hyperlinks which direct the reader to that section and clicking on the Terracon logo will bring you back to this page. For more interactive features, please view your project online at **client.terracon.com**.

Refer to each individual Attachment for a listing of contents.

Report Summary

Topic [1]	Overview Statement [2]
Project Description	The project will include the construction of a Drinking Water Site to include an 1800 SF building square metal framed structure, a detention pond, and associated pavements. A wetland delineation is currently being performed, so locations of the structure, pavements, and detention pond are subject to change. Our scope also included investigation of an alternate adjacent site.
Geotechnical Characterization	The subsurface investigation revealed that the site is underlain by existing fill material extending up to approximately twenty (20) feet below the surface. Beneath the fill materials, alluvium and Piedmont residual soils were encountered. The soils encountered during the exploration are generally classified as low consistency materials, indicating relatively very soft to soft conditions. Groundwater was first observed in boring B-1 at a depth of 6 feet, B-2 at 8 feet, PD-2 at 12 feet, and PD-1 at 7 feet and at 6'10" at the completion of the exploration.
Earthwork	We recommend proof rolling the structure pads after site stripping and before placing structural fill. Replace any loose and unstable areas with engineered fill. Undercutting and stabilization will likely be needed prior to fill placement.
Foundations	Due to the potential of significant total and differential settlement, shallow foundations are not recommended for the building addition. We recommend helical piles be given primary consideration for this site due to the shallow depth to groundwater and the nature of the subsurface material.
Pavements	Pavements should be separated from the high plasticity/elasticity soils encountered at this site with a minimum of 12 inches of suitable structural fill. Due to the deeper low consistency soils encountered at the site, we recommended a layer of geogrid such as Tensar NX-650 (light duty) or Tensar NX-750 (heavy duty) be included in pavement design. After undercutting and replacement of the upper 12 inches of highly plastic or elastic soils, the subgrade should be prepared as noted in **Earthwork**. Light Duty Asphalt (minimum) 2" Asphalt Surface Course, 8" Aggregate Base, Geogrid Heavy Duty Asphalt (minimum)

	1.25” Asphalt Surface Course, 1.75” Asphalt Binder Course, 12” Aggregate Base, Geogrid Light Duty Portland Cement Concrete (PCC) Pavement 5” PCC, 6” Aggregate Base, Geogrid Heavy Duty Portland Cement Concrete (PCC) Pavement 6½” PCC, 6” Aggregate Base, Geogrid
General Comments	This section contains important information about the limitations of this geotechnical engineering report.

1. If the reader is reviewing this report as a pdf, the topics above can be used to access the appropriate section of the report by simply clicking on the topic itself.
2. This summary is for convenience only. It should be used in conjunction with the entire report for design purposes.

Introduction

This report presents the results of our subsurface exploration and Geotechnical Engineering services performed for the proposed Drinking Water Site to be located at Atlanta Highway in Flowery Branch, Georgia. The purpose of these services was to provide information and geotechnical engineering recommendations relative to:

- Subsurface soil conditions
- Groundwater conditions
- Seismic site classification per IBC
- Site preparation and earthwork
- Foundation design and construction
- Floor slab design and construction
- Pavement design and construction

The geotechnical engineering Scope of Services for this project included the advancement of test borings, engineering analysis, and preparation of this report.

Drawings showing the site and boring locations are shown on the **Site Location** and **Exploration Plan**, respectively. The results of our field exploration are included on the boring logs in the **Exploration Results** section.

Project Description

Our initial understanding of the project was provided in our proposal and was discussed during project planning. A period of collaboration has transpired since the project was initiated, and our final understanding of the project conditions is as follows:

Item	Description
Information Provided	An email request was received on February 3, 2025, from Mr. Trey Crisp, RLA for a proposal for geotechnical services. The request included a site plan.

Item	Description
Project Description	The project will include the construction of a Drinking Water Site to include an 1800 SF building square metal framed structure, a detention pond, and associated pavements. A wetland delineation is currently being performed so locations of the structure, pavements, and detention pond are subject to change. Our scope also included investigation of an alternate adjacent site. During a phone call on March 24, 2025, between Trey Crisp and Stephen Boltja, Mr. Crisp indicated that development/construction in the area of Borings PD-1 and PD-2 is not currently being considered due to the City of Flowery Branch's additional requirements for the wetlands buffer. Should construction in this area be considered please notify us so that we may review the plans and revise our recommendations.
Finished Floor Elevation	Finished floor elevations were not provided
Maximum Loads	Anticipated structural loads were not provided
Below-Grade Structures	A detention pond. (No longer planned)
Free-Standing Retaining Walls	None anticipated
Building Code	IBC 2018 with Georgia Amendments

Terracon should be notified if any of the above information is inconsistent with the planned construction, especially the grading limits, as modifications to our recommendations may be necessary.

Site Conditions

The following description of site conditions is derived from our site visit in association with the field exploration and our review of publicly available geologic and topographic maps.

Item	Description
Parcel Information	The project is located at Atlanta Highway in Flowery Branch, Georgia. The area to be developed is approximately 2.3 acres in size. Latitude/Longitude (approximate): 34.190877° N 83.918315° W **Site Location**

Item	Description
Existing Improvements	The site appears to be wooded
Current Ground Cover	Wooded areas
Existing Topography	The existing site has elevation ranging from approximately 1,111 feet to 1,129 feet and slopes downward from Atlanta Highway to a creek.

Geotechnical Characterization

We have developed a general characterization of the subsurface conditions based upon our review of the subsurface exploration, geologic setting, and our understanding of the project. This characterization, termed GeoModel, forms the basis of our geotechnical calculations and evaluation of the site. Conditions observed at each exploration point are indicated on the individual logs. The individual logs can be found in the **Exploration Results** and the GeoModel can be found in the **Figures** attachment of this report.

As part of our analyses, we identified the following models for this site within the subsurface profile. For a more detailed view of the model layer depths at each boring location, refer to the GeoModel.

Model Layer	Layer Name	General Description
1	**Topsoil**	Topsoil
2	**Fill**	Fill - Sandy Fat Clay (CH), Fill - Sandy Silt (ML), Fill - Silty Clayey Sand (SC-SM), Fill - Sandy Lean Clay (CL), Fill - Clayey Sand (SC)
3	**Alluvium**	Alluvial Sandy Fat Clay (CH)
4	**Piedmont Residuum**	Sandy Fat Clay (CH)
5	**Piedmont Residuum**	Elastic Silt (MH), Sandy Elastic Silt (MH)
6	**Piedmont Residuum**	Sandy Silt (ML)

Groundwater

Groundwater was first observed in boring B-1 at a depth of 6 feet, B-2 at 8 feet, PD-2 at 12 feet, and PD-1 at 7 feet and at 6’10” at the completion of the exploration.

Boring Number	Elevation (Feet)[1]	Depth to Groundwater (Feet)		Cave in depth (Feet)
		Drilling[2]	At completion[3]	
B-1	1115.5	6	-	5
B-2	1120.2	8	-	7.5
P-1	1118.5	N/E	N/E	N/E
PD-1	1111.5	7	6.8	-
PD-2	1118.1	12	-	11.5

1. Elevations were obtained from ESG drawing, Flowery Branch Site, Sheet 1, dated March 6, 2025.
2. Groundwater level measured at the time of drilling.
3. Groundwater level measured at completion of drilling.

Groundwater level fluctuations occur due to seasonal variations in the amount of rainfall, runoff and other factors not evident at the time the borings were performed. In addition, perched water can develop over low permeability soil or rock strata. Therefore, groundwater levels during construction or at other times in the life of the structure may be higher or lower than the levels indicated on the boring logs. The possibility of groundwater level fluctuations should be considered when developing the design and construction plans for the project.

Seismic Site Class

The seismic design requirements for buildings and other structures are based on Seismic Design Category. Site Classification is required to determine the Seismic Design Category for a structure. The Site Classification is based on the upper 100 feet of the site profile defined by a weighted average value of either shear wave velocity, standard penetration resistance, or undrained shear strength in accordance with Section 20.4 of ASCE 7 and the International Building Code (IBC). Based on the soil properties observed at the site and as described on the exploration logs and results, our professional opinion is that a **Seismic Site Classification of D** be considered for the project. Subsurface explorations at this site were extended to a maximum depth of 25 feet. The site properties below the boring depth to 100 feet were estimated based on our experience and knowledge of geologic conditions of the general area. Additional deeper borings or geophysical testing may be performed to confirm the conditions below the current boring depth.

Site Geology

The project site is located in the Piedmont Physiographic Province of Georgia which is characterized by medium to high grade metamorphic rocks and scattered igneous intrusions. The term metamorphic describes rocks that have been subjected to high temperatures and/or pressures, usually deep within the earth's crust. These high temperatures and pressures cause the textural and mineralogical characteristics of the original rock to be altered and can also cause certain rock types to fully melt, becoming what is known as magma. Magma is less dense than the surrounding solidified rock and tends to move upward through fractures and joints, displacing the surrounding rock. This rock type is known as an igneous intrusion. Metamorphic rocks are predominant in this region but due to erosion and uplift, both of these rocks will eventually become exposed at the land surface.

The subsurface bedrock in this region has undergone differing rates of weathering, which often produces a considerable variation in depth to competent rock over short horizontal distances. It is also not unusual for lenses and boulders of hard rock and zones of partially weathered rock to be present within the soil mantle above the general bedrock level. The typical residual soil profile consists of clayey soils near the surface, where soil weathering is more advanced, underlain by sandy silts and silty sands, which often consist of saprolites (native soils which maintain the original fabric of the parent rock). Generally, the soil becomes harder with depth to the top of parent crystalline rock or "massive bedrock" which occurs at depth.

The boundary between soil and rock is typically not sharply defined. A transitional zone termed "partially weathered rock" is normally found overlying bedrock. Partially weathered rock (PWR) is defined for engineering purposes as residual material with a standard penetration resistance exceeding 100 blows per foot (bpf).

Geotechnical Overview

The site appears suitable for the proposed construction based upon geotechnical conditions encountered in the test borings, provided that the recommendations presented in this report are implemented in the design and construction phases of this project.

The subsurface investigation revealed that the site is underlain by existing fill material extending up to approximately twenty (20) feet below the surface. Beneath this, the fill transitions into Piedmont residual soils, which are characteristic of the region. The soils encountered during the exploration are generally classified as low blow consistency materials, indicating relatively very soft to soft conditions. The standard penetration test (SPT) N-values in the fill material ranged from 2 blows per foot (bpf) to 22 bpf. The SPT N-values in the residual soils ranged from 2 bpf to 14 bpf.

Support of floor slabs and pavements on or above existing fill materials is discussed in this report. However, even with the recommended construction procedures, there is inherent risk for the owner that compressible fill or unsuitable material, within or buried by the fill, will not be discovered. This risk of unforeseen conditions cannot be eliminated without completely removing the existing fill but can be reduced by following the recommendations contained in this report. To take advantage of the cost benefit of not removing the entire amount of undocumented fill, the owner must be willing to accept the risk associated with building over the undocumented fills following the recommended reworking of the material. Should this be the case, development can be supported on a shallow foundation system.

Based on the conditions encountered and estimated load-settlement relationships, we do not recommend shallow foundations for this site. The **Foundations** section includes a discussion on the use of helical piles, which would be appropriate for this site. The **Floor Slabs** section addresses slab-on-grade support of the building. The **Pavements** section addresses the design of pavement systems.

The recommendations contained in this report are based upon the results of field testing (presented in the **Exploration Results**), engineering analyses, and our current understanding of the proposed project. The **General Comments** section provides an understanding of the report limitations.

Earthwork

Earthwork is anticipated to include topsoil stripping, excavations, and engineered fill placement. The following sections provide recommendations for use in the preparation of specifications for the work. Recommendations include critical quality criteria, as necessary, to render the site in the state considered in our geotechnical engineering evaluation for foundations and floor slabs.

Earthwork on the project should be observed and evaluated by Terracon Consultants Inc. The evaluation of earthwork should include observation and testing of engineered fill, subgrade preparation, foundation bearing soils, and other geotechnical conditions exposed during the construction of the project and identified in this report.

High plasticity (CH) soils are present on the site and, if excavated, should not be used with the upper 18 inches below structural foundations, floor slabs, or within 12 inches of pavement systems. If encountered at the subgrade level, these soils should be undercut to 18 inches below foundations and twelve inches below floor slabs and pavement systems.

Site Preparation

Prior to placing fill or removing soil in cut areas, the existing vegetation, topsoil, and root mats should be removed. Any existing asphalt, concrete, curbing, and other non-soil items

should be removed. Care should be taken to remove any below grade footings or utilities in the structural areas of the site. Any removed materials should be properly backfilled in accordance with the recommendations contained in this report. Complete stripping of the topsoil should be performed in the proposed building and parking/driveway areas.

Where fill is placed on existing slopes or slopes generated during site undercutting steeper than 5H:1V, benches should be cut into the existing slopes prior to fill placement. The benches should have a minimum vertical face height of 1 foot and a maximum vertical face height of 3 feet and should be cut wide enough to accommodate the compaction equipment. This benching will help provide a positive bond between the fill and natural soils and reduce the possibility of failure along the fill/natural soil interface.

Subgrade Preparation

Structural fill placed beneath the entire footprint of the building addition should extend horizontally a minimum distance of 10 feet beyond the outside edge of footings. Portions of the near-surface materials anticipated to be developed as excavation spoils should be further evaluated for use as structural fill.

The subgrade should be proof rolled with an adequately loaded vehicle such as a fully loaded tandem-axle dump truck. The proof rolling should be performed under the observation of the Geotechnical Engineer or representative. Areas excessively deflecting under the proof roll should be delineated and subsequently addressed by the Geotechnical Engineer. Excessively wet or dry material should either be removed, or moisture conditioned and recompacted. We anticipate that, based on the SPT values in the soil borings, some undercutting or reworking of the near surface soils will be required. Soil stabilization, as discussed later in this report, will likely be needed as well. Actual remedial actions can best be determined at the time of construction.

Undercut soils free of organics may be reused for fill after moisture conditioning. All exposed areas which will receive fill, once properly cleared and benched where necessary, should be scarified to a minimum depth of 10 inches, moisture conditioned as necessary, and compacted per the compaction requirements in this report. Compacted structural fill soils should then be placed to the proposed design grade and the moisture content and compaction of subgrade soils should be maintained until foundation or pavement construction.

Based upon the subsurface conditions determined from the geotechnical exploration, subgrade soils exposed during construction are anticipated to be relatively workable; however, the workability of the subgrade may be affected by precipitation, repetitive construction traffic or other factors. If unworkable conditions develop, workability may be improved by scarifying and drying.

Excavation

We anticipate that excavations for the proposed construction can be accomplished with conventional earthmoving equipment. The bottom of excavations should be thoroughly cleaned of loose soils and disturbed materials prior to backfill placement and/or construction.

Soil Stabilization

If the exposed subgrade is unstable during proof rolling operations, it could be stabilized using one of the methods outlined below.

- **Undercutting and Replacement** – Highly Plastic/Elastic soils should be undercut a minimum of 18 inches beneath foundations and 12 inches in pavement areas. Exposed subgrades should be stabilized prior to replacement of the removed soils. Removed soils should be replaced with structural fill placed per the recommendations in this report.
- **Scarification and Recompaction** - It may be feasible to scarify, dry, and recompact the exposed soils. The success of this procedure would depend primarily upon favorable weather and sufficient time to dry the soils. Stable subgrades likely would not be achievable if the thickness of the unstable soil is greater than about 1 foot, if the unstable soil is at or near groundwater levels, or if construction is performed during a period of wet or cool weather when drying is difficult.
- **Crushed Stone** - The use of crushed stone or crushed gravel is a common procedure to improve subgrade stability. Typical undercut depths would be expected to range from about 8 to 12 inches below finished subgrade elevation. The use of high modulus geotextiles (i.e., engineering fabric or geogrid) could also be considered after underground work such as utility construction is completed. Prior to placing the fabric or geogrid, we recommend that all below grade construction, such as utility line installation, be completed to avoid damaging the fabric or geogrid. Equipment should not be operated above the fabric or geogrid until one full lift of crushed stone fill is placed above it. The maximum particle size of granular material placed over geotextile fabric or geogrid should not exceed 1-1/2 inches.

Further evaluation of the need and recommendations for undercutting and subgrade stabilization can be provided during construction as the geotechnical conditions are exposed.

Fill Material Types

Fill required to achieve design grade should be classified as structural fill and general fill. Structural fill is material used below, or within 10 feet of structures, pavements or constructed slopes. General fill is material used to achieve grade outside of these areas.

Reuse of On-Site Soil: Excavated on-site soil may be selectively reused as fill based on the subsurface exploration. Actual material suitability should be determined in the field at time of construction. Moisture conditioning will likely be required prior to reuse as fill.

Imported Fill Materials: Imported fill materials should meet the following material property requirements. Regardless of its source, compacted fill should consist of approved materials that are free of organic matter and debris. Frozen material should not be used, and fill should not be placed on a frozen subgrade.

Soil Type [1]	USCS Classification	Acceptable Parameters (for Structural Fill)
Low Plasticity Cohesive	CL, CL-ML ML, SM, SC	Liquid Limit less than 45, Plasticity index less than 25 Less than 25% retained on No. 200 sieve
Granular	GW, GP, GM, GC, SW, SP, SM, SC	Less than 50% passing No. 200 sieve

1. Structural and general fill should consist of approved materials free of organic matter and debris. Frozen material should not be used, and fill should not be placed on a frozen subgrade. A sample of each material type should be submitted to the Geotechnical Engineer for evaluation prior to use on this site. Additional geotechnical consultation should be provided prior to use of uniformly graded gravel on the site.

Fill Placement and Compaction Requirements

Structural and general fill should meet the following compaction requirements.

Item	Structural Fill	General Fill
Maximum Lift Thickness	8 inches or less in loose thickness when heavy, self-propelled compaction equipment is used 4 to 6 inches in loose thickness when hand-guided equipment (i.e. jumping jack or plate compactor) is used	Same as structural fill
Minimum Compaction Requirements [1,2]	98% of max. dry density below foundations and within 1 foot of finished pavement subgrade 95% of max. dry density above foundations, below floor slabs, and more than 1 foot below finished pavement subgrade	92% of max. dry density

Item	Structural Fill	General Fill
Water Content Range [1]	-3% to +3% of optimum	As required to achieve min. compaction requirements

1. Maximum dry density and optimum water content as determined by the standard Proctor test (ASTM D 698).
2. High plasticity cohesive fill should not be compacted to more than 100% of standard Proctor maximum dry density.

Utility Trench Backfill

Any soft or unsuitable materials encountered at the bottom of utility trench excavations should be removed and replaced with structural fill or bedding material in accordance with public works specifications for the utility being supported. This recommendation is particularly applicable to utility work requiring grade control and/or in areas where subsequent grade raising could cause settlement in the subgrade supporting the utility. Trench excavation should not be conducted below a downward 1:1 projection from existing foundations without engineering review of shoring requirements and geotechnical observation during construction.

Trench backfill should be mechanically placed and compacted as discussed earlier in this report. Compaction of initial lifts should be accomplished with hand-operated tampers or other lightweight compactors. Where trenches are placed beneath slabs or footings, the backfill should satisfy the gradation and expansion index requirements of engineered fill discussed in this report. Flooding or jetting for placement and compaction of backfill is not recommended.

For low permeability subgrades, utility trenches are a common source of water infiltration and migration. Utility trenches penetrating beneath the building should be effectively sealed to restrict water intrusion and flow through the trenches, which could migrate below the building. The trench should provide an effective trench plug that extends at least 5 feet from the face of the building exterior. The plug material should consist of cementitious flowable fill or low permeability clay. The trench plug material should be placed to surround the utility line. If used, the clay trench plug material should be placed and compacted to comply with the water content and compaction recommendations for structural fill stated previously in this report.

Grading and Drainage

All grades must provide effective drainage away from the building during and after construction and should be maintained throughout the life of the structure. Water retained next to the building can result in soil movements greater than those discussed in this report. Greater movements can result in unacceptable differential floor slab and/or

foundation movements, cracked slabs and walls, and roof leaks. The roof should have gutters/drains with downspouts that discharge onto splash blocks at a distance of at least 10 feet from the building.

Exposed ground should be sloped and maintained at a minimum of 5% away from the building for at least 10 feet beyond the perimeter of the building. Locally, flatter grades may be necessary to transition ADA access requirements for flatwork. After building construction and landscaping have been completed, final grades should be verified to document effective drainage has been achieved. Grades around the structure should also be periodically inspected and adjusted, as necessary, as part of the structure's maintenance program. Where paving or flatwork abuts the structure, a maintenance program should be established to effectively seal and maintain joints and prevent surface water infiltration.

Earthwork Construction Considerations

Shallow excavations for the proposed structures are anticipated to be accomplished with conventional construction equipment. Upon completion of filling and grading, care should be taken to maintain the subgrade water content prior to construction of grade-supported improvements such as floor slabs and pavements. Construction traffic over the completed subgrades should be avoided. The site should also be graded to prevent ponding of surface water on the prepared subgrades or in excavations. Water collecting over or adjacent to construction areas should be removed. If the subgrade freezes, desiccates, saturates, or is disturbed, the affected material should be removed, or the materials should be scarified, moisture conditioned, and recompacted prior to floor slab construction.

As a minimum, excavations should be performed in accordance with OSHA 29 CFR, Part 1926, Subpart P, "Excavations" and its appendices, and in accordance with any applicable local and/or state regulations.

Construction site safety is the sole responsibility of the contractor who controls the means, methods, and sequencing of construction operations. Under no circumstances shall the information provided herein be interpreted to mean Terracon is assuming responsibility for construction site safety or the contractor's activities; such responsibility shall neither be implied nor inferred.

Excavations or other activities resulting in ground disturbance have the potential to affect adjoining properties and structures. Our scope of services does not include review of available final grading information or consider potential temporary grading performed by the contractor for potential effects such as ground movement beyond the project limits. A preconstruction/ precondition survey should be conducted to document nearby property/infrastructure prior to any site development activity. Excavation or ground disturbance activities adjacent or near property lines should be monitored or instrumented

for potential ground movements that could negatively affect adjoining property and/or structures.

Construction Observation and Testing

The earthwork efforts should be observed by the Geotechnical Engineer (or others under their direction). Observation should include documentation of adequate removal of surficial materials (vegetation, topsoil, and pavements), evaluation and remediation of existing fill materials, as well as proof rolling and mitigation of unsuitable areas delineated by the proof roll.

Each lift of compacted fill should be tested, evaluated, and reworked, as necessary, as recommended by the Geotechnical Engineer prior to placement of additional lifts. Each lift of fill should be tested for density and water content at a frequency of at least one test for every 2,500 square feet of compacted fill in the building areas and 5,000 square feet in pavement areas. Where not specified by local ordinance, one density and water content test should be performed for every 100 linear feet of compacted utility trench backfill and a minimum of one test performed for every 12 vertical 3 inches of compacted backfill.

In areas of foundation excavations, the bearing subgrade should be evaluated by the Geotechnical Engineer. If unanticipated conditions are observed, the Geotechnical Engineer should prescribe mitigation options.

In addition to the documentation of the essential parameters necessary for construction, the continuation of the Geotechnical Engineer into the construction phase of the project provides the continuity to maintain the Geotechnical Engineer's evaluation of subsurface conditions, including assessing variations and associated design changes.

In areas of foundation excavations, the bearing subgrade should be evaluated by the Geotechnical Engineer (or his representative). If unanticipated conditions are observed, the Geotechnical Engineer should prescribe mitigation options.

In addition to the documentation of the essential parameters necessary for construction, the continuation of the Geotechnical Engineer into the construction phase of the project provides the continuity to maintain the Geotechnical Engineer's evaluation of subsurface conditions, including assessing variations and associated design changes.

Foundations

Due to the depth of the low consistency soils and the shallow depth to groundwater, shallow foundations are not suitable for this site.

Helical Piles

Helical piles can be used to support the structure at the site. Helical pile systems are typically installed by design-build contractors who will provide sealed construction drawings based on geotechnical information provided by others. The critical aspect of helical pile installation is achieving the design torque required to install each pile, which correlates to the capacity for a given pile type and size as determined by the pile manufacturer. Minimum embedment depths should also be anticipated based on the subsurface information. In general, helical pile systems can be designed to achieve total settlement on the order of 1 inch or less and differential settlement on the order of ½ inch or less. Based on the boring data for this project, we anticipate that the helical piles would need to be extended to depths on the order of 20 to 25 feet, depending on required capacities.

We recommend that you contact helical pile contractors to review and analyze the subsurface data in this report, as well as the proposed structural loads for the project, and to obtain a cost estimate for helical pile installation. We also recommend that the helical pile installation be monitored full time by the Owner's geotechnical consultant. The QC program should include observation of pile spacing, pile types installed, embedment depths and torque achieved upon installation. Terracon is available to provide assistance as needed during the design process.

Floor Slabs

Design parameters for floor slabs assume the requirements for **Earthwork** have been followed, which includes 12 inches of separation for any highly plastic/elastic soils. Specific attention should be given to positive drainage away from the structure and positive drainage of the aggregate base beneath the floor slab.

Floor Slab Design Parameters

Item	Description
Floor Slab Support[1]	Minimum 12 inches of approved on-site or imported soils placed and compacted in accordance with the recommendations in **Earthwork**.
Estimated Modulus of Subgrade Reaction [2]	100 pounds per square inch per inch (psi/in) for point loads
Subbase	4 inches granular material

1. Floor slabs should be structurally independent of building footings or walls to reduce the possibility of floor slab cracking caused by differential movements between the slab and foundation.
2. Modulus of subgrade reaction is an estimated value based upon our experience with the subgrade condition, the requirements noted in **Earthwork**, and the floor slab support as

noted in this table. It is provided for point loads. For large area loads the modulus of subgrade reaction would be lower.

The use of a vapor retarder should be considered beneath concrete slabs on grade covered with wood, tile, carpet, or other moisture sensitive or impervious coverings, when the project includes humidity-controlled areas, or when the slab will support equipment sensitive to moisture. When conditions warrant the use of a vapor retarder, the slab designer should refer to ACI 302 and/or ACI 360 for procedures and cautions regarding the use and placement of a vapor retarder.

Saw-cut contraction joints should be placed in the slab to help control the location and extent of cracking. For additional recommendations, refer to the ACI Design Manual. Joints or cracks should be sealed with a waterproof, non-extruding compressible compound specifically recommended for heavy duty concrete pavement and wet environments.

Where floor slabs are tied to perimeter walls or turn-down slabs to meet structural or other construction objectives, our experience indicates differential movement between the walls and slabs will likely be observed in adjacent slab expansion joints or floor slab cracks beyond the length of the structural dowels. The Structural Engineer should account for potential differential settlement through use of sufficient control joints, appropriate reinforcing or other means.

Floor Slab Construction Considerations

Finished subgrade, within and for at least 10 feet beyond the floor slab, should be protected from traffic, rutting, or other disturbance and maintained in a relatively moist condition until floor slabs are constructed. If the subgrade should become damaged or desiccated prior to construction of floor slabs, the affected material should be removed, and structural fill should be added to replace the resulting excavation. Final conditioning of the finished subgrade should be performed immediately prior to placement of the floor slab support course.

The Geotechnical Engineer should observe the condition of the floor slab subgrades immediately prior to placement of the floor slab support course, reinforcing steel, and concrete. Attention should be paid to high traffic areas that were rutted and disturbed earlier, and to areas where backfilled trenches are located.

Pavements

Subgrade Preparation

On most project sites, the site grading is accomplished relatively early in the construction phase. Fills are placed and compacted in a uniform manner. However, as construction

proceeds, excavations are made into these areas, rainfall and surface water saturates some areas, heavy traffic from concrete trucks and other delivery vehicles disturbs the subgrade and many surface irregularities are filled in with loose soils to improve trafficability temporarily. As a result, the pavement subgrades, initially prepared early in the project, should be carefully evaluated as the time for pavement construction approaches.

We recommend the removal of the upper 12 inches of highly plastic/elastic soils. We recommend the moisture content and density of the top 12 inches of the exposed subgrade be evaluated, and the exposed subgrades be proofrolled. Once the exposed subgrade is stabilized, the removed soils should be replaced in accordance with the recommendations of structural fill in this report. The recommended pavement section includes a layer of geogrid as detailed in the **Estimates of Minimum Pavement Thicknesses** table. Paving operations should begin within two days subgrade being prepared. Areas not in compliance with the required ranges of moisture or density should be moisture conditioned and recompacted. Particular attention should be paid to high traffic areas that were rutted and disturbed earlier and to areas where backfilled trenches are located. Areas where unsuitable conditions are located should be repaired by removing and replacing the materials with properly compacted fills. If a significant precipitation event occurs after the evaluation or if the surface becomes disturbed, the subgrade should be reviewed by qualified personnel immediately prior to paving. The subgrade should be in its finished form at the time of the final review.

After proofrolling and repairing subgrade deficiencies, the entire subgrade should be scarified and developed as recommended in the **Earthwork** section of this report to provide a uniform subgrade for pavement construction. Areas that appear severely desiccated following site stripping may require further undercutting and moisture conditioning.

Pavement Design Considerations

Traffic patterns and anticipated loading conditions were not available at the time that this report was prepared. However, we anticipate that traffic loads will be produced primarily by automobile traffic and occasional delivery and trash removal trucks. The thickness of pavements subjected to heavy truck traffic should be determined using expected traffic volumes, vehicle types, and vehicle loads and should be in accordance with local, city or county ordinances.

Pavement thickness can be determined using AASHTO, Asphalt Institute and/or other methods if specific wheel loads, axle configurations, frequencies, and desired pavement life are provided. Terracon can provide thickness recommendations for pavements subjected to loads other than personal vehicle and occasional delivery and trash removal truck traffic if this information is provided.

Pavement performance is affected by its surroundings. In addition to providing preventive maintenance, the civil engineer should consider the following recommendations in the design and layout of pavements:

- Final grade adjacent to parking lots and drives should slope down from pavement edges at a minimum 2%;
- The subgrade and the pavement surface should have a minimum ¼ inch per foot slope to promote proper surface drainage;
- Install pavement drainage surrounding areas anticipated for frequent wetting (e.g., garden centers, wash racks);
- Install joint sealant and seal cracks immediately;
- Seal all landscaped areas in, or adjacent to pavements to reduce moisture migration to subgrade soils;
- Place compacted, low permeability backfill against the exterior side of curb and gutter; and,
- Place curb, gutter and/or sidewalk directly on low permeability subgrade soils rather than on unbound granular base course materials.

Estimates of Minimum Pavement Thickness

As a minimum, we recommend the following **minimum** typical pavement sections be considered.

Asphalt (AC) Pavement			
Material	**Light Duty[1] Thickness (inches)**	**Heavy Duty[2] Thickness (inches)**	**GDOT**
Subgrade	Upper 12 inches of engineered fill	Upper 12 inches of engineered fill	98% of Standard Proctor MMD, -2 to +3% OMC
Geogrid	Tensar NX-650	Tensar NX-750	N/A
Aggregate Base	8	12	GAB, Section 815 and 310
Asphalt Binder Course	-	1¾	SP19 - Section 400, 424, 824 and 828
Asphalt Surface Course	2	1¼	SP9.5 - Section 400, 424, 824 and 828

1. Automobiles only.
2. Combined automobiles and trucks

The graded aggregate base should be compacted to a minimum of 98 percent of the material's modified Proctor (ASTM D-1557, Method C) maximum dry density. Where base

course thickness exceeds 6 inches, the material should be placed and compacted in two or more lifts of equal thickness.

The listed pavement component thicknesses should be used as a guide for pavement systems at the site for the traffic classifications stated herein. These recommendations assume a 20-year pavement design life. If pavement frequencies or loads will be different than that specified Terracon should be contacted and allowed to review these pavement sections.

Construction traffic on the pavements was not considered in developing the recommended minimum pavement thicknesses. If the pavements will be subject to traffic by construction equipment/vehicles, the pavement thicknesses should be revised to consider the effects of the additional traffic loading.

Asphalt concrete aggregates and base course materials should conform to the Georgia Department of Transportation (GDOT) "Standard Specifications for Construction of Transportation System".

Portland Cement Concrete (PCC) Pavement			
Material	**Light Duty[1] Thickness (inches)**	**Heavy Duty[2] Thickness (inches)**	**Reference**
Subgrade	Upper 12 inches of engineered fill	Upper 12 inches of engineered fill	GDOT: 98% of Standard Proctor MMD, -2 to +3% OMC
Geogrid	Tensar NX-650	Tensar NX-750	N/A
Aggregate Base	6	6	GDOT: GAB, Section 815 and 310
PCC	5	6 ½	ACI

1. Automobiles only.
2. Combined automobiles and trucks

We recommend a Portland cement concrete (PCC) pavement be utilized in entrance and exit sections, dumpster pads, loading dock areas, or other areas where extensive wheel maneuvering are expected. The dumpster pad (if applicable) should be large enough to support the wheels of the truck which will bear the load of the dumpster.

Although not required for structural support, the base course layer is recommended to help reduce potentials for slab curl, shrinkage cracking, and subgrade "pumping" through joints. Proper joint spacing will also be required to prevent excessive slab curling and

shrinkage cracking. All joints should be sealed to prevent entry of foreign material and dowelled where necessary for load transfer.

Portland cement concrete should be designed with proper air-entrainment and have a minimum compressive strength of 4,000 psi after 28 days of laboratory curing. Adequate reinforcement and number of longitudinal and transverse control joints should be placed in the rigid pavement in accordance with ACI requirements. The joints should be sealed as soon as possible (in accordance with sealant manufacturer's instructions and ACI requirements) to minimize infiltration of water into the soil.

Pavement Drainage

Pavements should be sloped to provide rapid drainage of surface water. Water allowed to pond on or adjacent to the pavements could saturate the subgrade and contribute to premature pavement deterioration. In addition, the pavement subgrade should be graded to provide positive drainage within the granular base section.

We recommend drainage be included at the bottom of the GAB layer at the storm structures to aid in removing water that may enter this layer. Drainage could consist of small diameter weep holes excavated around the perimeter of the storm structures. The weep holes should be excavated at the elevation of the GAB and soil interface. The excavation should be covered with No. 57 stone which is encompassed in Mirafi 140 NL or approve equivalent which will aid in reducing fines from entering the storm system.

Pavement Maintenance

The pavement sections provided in this report represent the minimum recommended thicknesses and, as such, periodic maintenance should be anticipated. Therefore, preventive maintenance should be planned and provided for through an on-going pavement management program. Preventive maintenance activities are intended to slow the rate of pavement deterioration, and to preserve the pavement investment. Preventive maintenance consists of both localized maintenance (e.g., crack and joint sealing and patching) and global maintenance (e.g., surface sealing). Preventive maintenance is usually the first priority when implementing a planned pavement maintenance program and provides the highest return on investment for pavements. Prior to implementing any maintenance, additional engineering observation is recommended to determine the type and extent of preventive maintenance. Even with periodic maintenance, some movements and related cracking may still occur, and repairs may be required.

General Comments

Our analysis and opinions are based upon our understanding of the project, the geotechnical conditions in the area, and the data obtained from our site exploration.

Variations will occur between exploration point locations or due to the modifying effects of construction or weather. The nature and extent of such variations may not become evident until during or after construction. Terracon should be retained as the Geotechnical Engineer, where noted in this report, to provide observation and testing services during pertinent construction phases. If variations appear, we can provide further evaluation and supplemental recommendations. If variations are noted in the absence of our observation and testing services on-site, we should be immediately notified so that we can provide evaluation and supplemental recommendations.

Our Scope of Services does not include either specifically or by implication any environmental or biological (e.g., mold, fungi, bacteria) assessment of the site or identification or prevention of pollutants, hazardous materials or conditions. If the owner is concerned about the potential for such contamination or pollution, other studies should be undertaken.

Our services and any correspondence are intended for the sole benefit and exclusive use of our client for specific application to the project discussed and are accomplished in accordance with generally accepted geotechnical engineering practices with no third-party beneficiaries intended. Any third-party access to services or correspondence is solely for information purposes to support the services provided by Terracon to our client. Reliance upon the services and any work product is limited to our client and is not intended for third parties. Any use or reliance of the provided information by third parties is done solely at their own risk. No warranties, either express or implied, are intended or made.

Site characteristics as provided are for design purposes and not to estimate excavation cost. Any use of our report in that regard is done at the sole risk of the excavating cost estimator as there may be variations on the site that are not apparent in the data that could significantly affect excavation cost. Any parties charged with estimating excavation costs should seek their own site characterization for specific purposes to obtain the specific level of detail necessary for costing. Site safety and cost estimating including excavation support and dewatering requirements/design are the responsibility of others. Construction and site development have the potential to affect adjacent properties. Such impacts can include damages due to vibration, modification of groundwater/surface water flow during construction, foundation movement due to undermining or subsidence from excavation, as well as noise or air quality concerns. Evaluation of these items on nearby properties are commonly associated with contractor means and methods and are not addressed in this report. The owner and contractor should consider a preconstruction/precondition survey of surrounding development. If changes in the nature, design, or location of the project are planned, our conclusions and recommendations shall not be considered valid unless we review the changes and either verify or modify our conclusions in writing.

Figures

Contents:

GeoModel

514 Hillcrest Indust. Blvd
Macon, GA

GeoModel

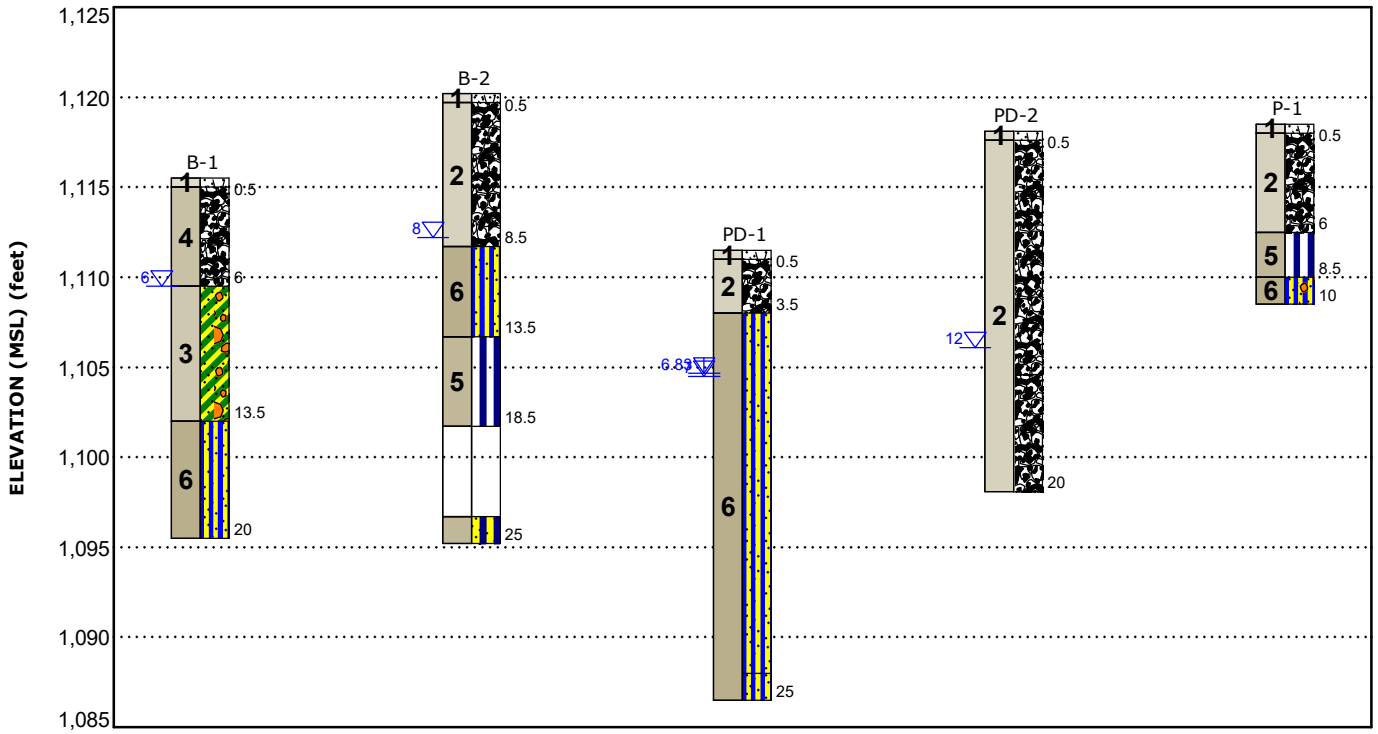

This is not a cross section. This is intended to display the Geotechnical Model only. See individual logs for more detailed conditions.

Model Layer	Layer Name	General Description
1	**Topsoil**	Topsoil
2	**Fill**	Fill - Sandy Fat Clay (CH), Fill - Sandy Silt (ML), Fill - Silty Clayey Sand (SC-SM), Fill - Sandy Lean Clay (CL), Fill - Clayey Sand (SC)
3	**Alluvium**	Alluvium Sandy Fat Clay (CH)
4	**Piedmont Residual Soils**	Sandy Fat Clay (CH)
5	**Piedmont Residual Soils**	Elastic Silt (MH), Sandy Elastic Silt (MH)
6	**Piedmont Residual Soils**	Sandy Silt (ML)

Legend

- Topsoil
- Fill
- Sandy Fat Clay with Gravel
- Sandy Silt
- Elastic Silt
- Sandy Elastic Silt
- Sandy Silt with Gravel

NOTES:
Layering shown on this figure has been developed by the geotechnical engineer for purposes of modeling the subsurface conditions as required for the subsequent geotechnical engineering for this project.

▽ First Water Observation
▽ Second Water Observation

Groundwater levels are temporal. The levels shown are representative of the date and time of our exploration. Significant changes are possible over time.
Water levels shown are as measured during and/or after drilling. In some cases, boring advancement methods mask the presence/absence of groundwater. See individual logs for details.

Attachments

Contents:

Exploration and Testing Procedures
Site Location and Exploration Plans
Exploration Results
Supporting Information

Exploration and Testing Procedures

Field Exploration

Number of Borings	Approximate Boring Depth (feet)	Location
2	20	Building Addition Area
1	10	Pavement
2	20-25	Previously planned detention pond structure

Boring Layout and Elevations: Terracon personnel provided the boring layout using handheld GPS equipment (estimated horizontal accuracy of about ±20 feet) and referencing existing site features. If elevations and a more precise boring layout are desired, we recommend borings be surveyed.

Subsurface Exploration Procedures: We advanced the borings with a truck-mounted, track-mounted, ATV-mounted rotary drill rig using continuous flight augers (solid stem and/or hollow stem, as necessary, depending on soil conditions). Four samples were obtained in the upper 10 feet of each boring and at intervals of 5 feet thereafter. In the split-barrel sampling procedure, a standard 2-inch outer diameter split-barrel sampling spoon was driven into the ground by a 140-pound automatic hammer falling a distance of 30 inches. The number of blows required to advance the sampling spoon the last 12 inches of a normal 18-inch penetration is recorded as the Standard Penetration Test (SPT) resistance value. The SPT resistance values, also referred to as N-values, are indicated on the boring logs at the test depths. We observed and recorded groundwater levels during drilling and sampling. Due to low blow count material at a depth of 20 feet in B-1, the borehole was advanced an additional 10 feet to explore suitable material. For safety purposes, all borings were backfilled with auger cuttings after their completion.

We also observed the boreholes while drilling and at the completion of drilling for the presence of groundwater. The groundwater levels are shown on the attached boring logs.

The sampling depths, penetration distances, and other sampling information was recorded on the field boring logs. The samples were placed in appropriate containers and taken to our soil laboratory for classification by a Geotechnical Engineer. Our exploration team prepared field boring logs as part of the drilling operations. These field logs included visual classifications of the materials observed during drilling and our interpretation of the subsurface conditions between samples. Final boring logs were prepared from the field logs. The final boring logs represent the Geotechnical Engineer's interpretation of the field logs and include modifications based on observations and field data.

Site Location and Exploration Plans

Contents:

Site Location Plan
Exploration Plan

Note: All attachments are one page unless noted above.

Site Location

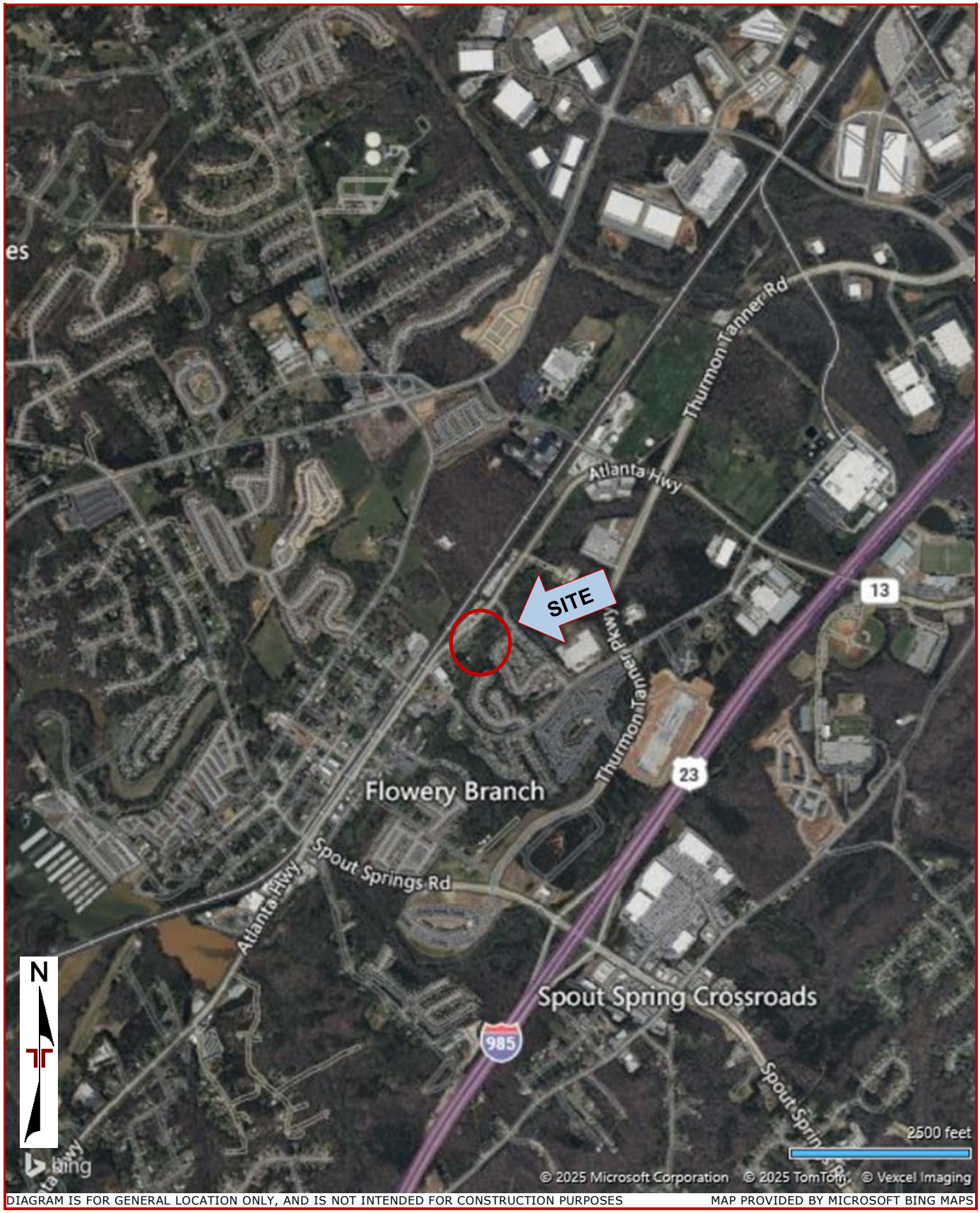

DIAGRAM IS FOR GENERAL LOCATION ONLY, AND IS NOT INTENDED FOR CONSTRUCTION PURPOSES MAP PROVIDED BY MICROSOFT BING MAPS

Exploration Plan

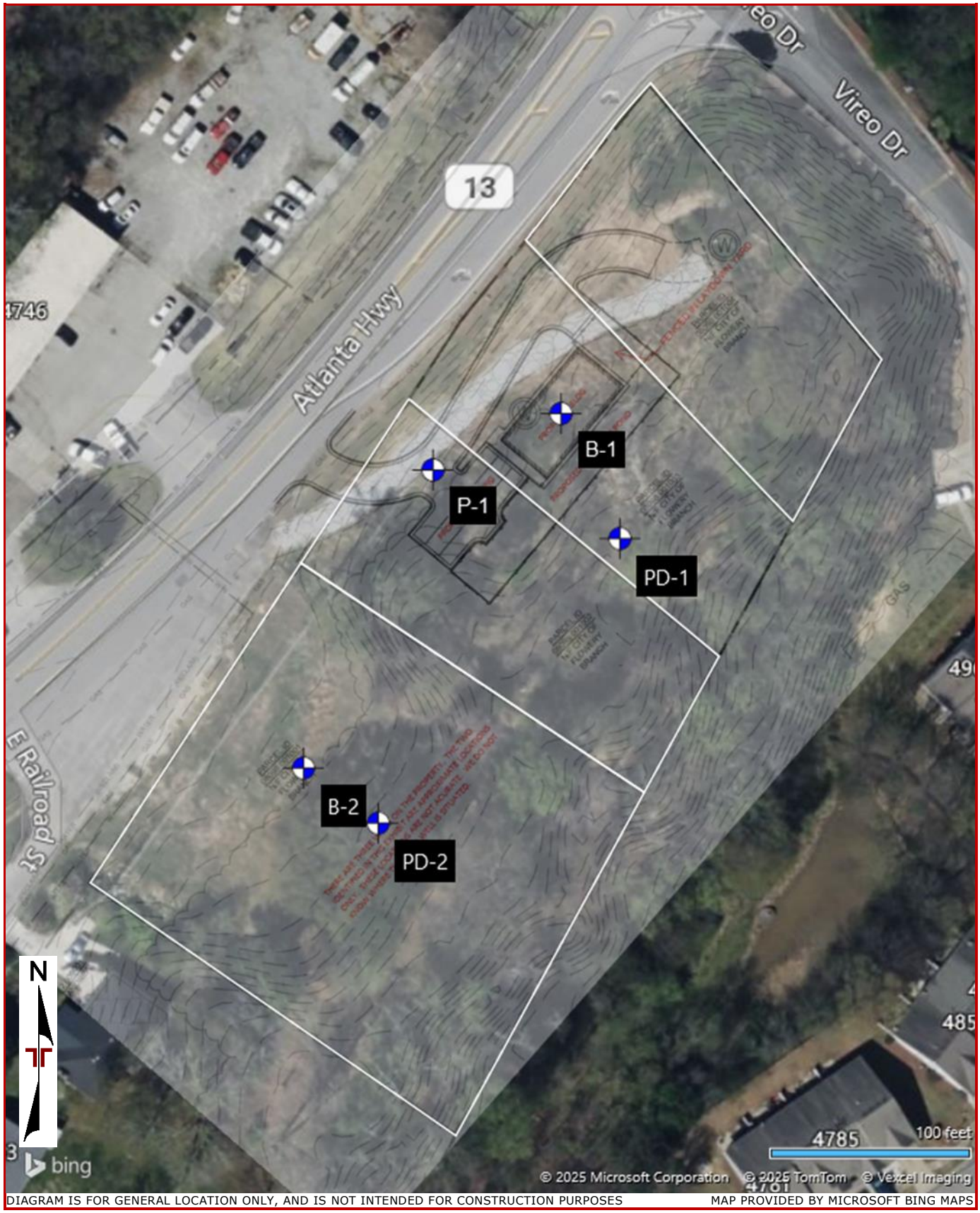

DIAGRAM IS FOR GENERAL LOCATION ONLY, AND IS NOT INTENDED FOR CONSTRUCTION PURPOSES MAP PROVIDED BY MICROSOFT BING MAPS

Exploration Results

Contents:

Boring Logs (B-1, B-2, P-1, PD-1 and PD-2)
Atterberg Limits
Grain Size Analysis

Note: All attachments are one page unless noted above.

Terracon
514 Hillcrest Indust. Blvd
Macon, GA

Boring Log No. B-1

Location: See Exploration Plan

Latitude: 34.1909° Longitude: -83.9183°

Model Layer	Graphic Log	Depth (Ft.)	Elevation: 1115.5 (Ft.)	Depth (Ft.)	Water Level Observations	Sample Type	Field Test Results	Water Content (%)	Atterberg Limits LL-PL-PI
1		0.5	**TOPSOIL**, 4.25" 1115						
4		6.0	**FILL - SANDY FAT CLAY (CH)**, trace organics, fine to medium grained, brown, soft, with rock fragments 1109.5				2-2-2 N=4		
							1-2-2 N=4		
				5					
3		13.5	**SANDY FAT CLAY WITH GRAVEL (CH)**, trace organics, fine to medium grained, light gray, very soft to soft, Alluvium 1102				1-2-2 N=4		
							WOH-1-1 N=2		
				10					
6		20.0	**SANDY SILT (ML)**, with mica, fine to medium grained, tan, medium stiff to stiff, Residuum, with rock fragments 1095.5				1-3-4 N=7		
				15					
							2-5-5 N=10		
			Boring Terminated at 20 Feet	20					

See Exploration and Testing Procedures for a description of field and laboratory procedures used and additional data (If any).

See Supporting Information for explanation of symbols and abbreviations.

Elevation Reference: Elevations obtained from ESG drawing, Flowery Branch Site, Sheet 1, dated March 6, 2025.

Water Level Observations
While drilling

Cave in

Drill Rig
1306

Hammer Type
Automatic

Driller
A. Downs

Logged by
C. Shubert

Boring Started
02-27-2025

Boring Completed
02-27-2025

Notes

Advancement Method
3.25" HSA

Abandonment Method
Boring backfilled with auger cuttings upon completion.

Terracon
514 Hillcrest Indust. Blvd
Macon, GA

Boring Log No. B-2

Location: See Exploration Plan

Latitude: 34.1904° Longitude: -83.9187°

Model Layer	Graphic Log	Depth (Ft.)	Elevation: 1120.2 (Ft.)	Water Level Observations	Sample Type	Field Test Results	Water Content (%)	Atterberg Limits LL-PL-PI
1		0.5	**TOPSOIL**, 3" 1119.7					
2			**FILL - SILTY SAND (SM)**, trace mica, fine to coarse grained, brown, very loose, with rock fragments, trace organics			1-2-1 N=3		
						1-1-1 N=2	25.3	43-33-10
			moist			2-1-2 N=3		
		8.5	1111.7					
6			**SANDY SILT (ML)**, trace mica, fine to medium grained, tan and light gray, stiff, Residuum			2-4-10 N=14		
		13.5	1106.7					
5			**ELASTIC SILT (MH)**, trace organics, tan and light gray, stiff			1-4-5 N=9		
		18.5	1101.7					
			No Recovery			2-2-2 N=4		
		23.5	1096.7					
			SANDY ELASTIC SILT (MH), fine to medium grained, tan, moist, medium stiff, with rock fragments			2-4-3 N=7		
		25.0	1095.2					
			Boring Terminated at 25 Feet					

Depth (Ft.): 5, 10, 15, 20, 25

See Exploration and Testing Procedures for a description of field and laboratory procedures used and additional data (If any).

See Supporting Information for explanation of symbols and abbreviations.

Elevation Reference: Elevations obtained from ESG drawing, Flowery Branch Site, Sheet 1, dated March 6, 2025.

Water Level Observations
While drilling

Cave in

Notes

Advancement Method
3.25" HSA

Abandonment Method
Boring backfilled with auger cuttings upon completion.

Drill Rig
1306

Hammer Type
Automatic

Driller
A. Downs

Logged by
C. Shubert

Boring Started
02-27-2025

Boring Completed
02-27-2025

Terracon
514 Hillcrest Indust. Blvd
Macon, GA

Boring Log No. PD-1

Location: See Exploration Plan

Latitude: 34.1907° Longitude: -83.9182°

Model Layer	Graphic Log	Depth (Ft.)	Elevation: 1111.5 (Ft.)	Depth (Ft.)	Water Level Observations	Sample Type	Field Test Results	Water Content (%)	Atterberg Limits LL-PL-PI
1		0.5	**TOPSOIL**, 4" 1111						
2		3.5	**FILL - SILTY CLAYEY SAND WITH GRAVEL (SC-SM)**, fine to coarse grained, tan and gray, loose 1108				2-4-4 N=8		
6			**SANDY SILT (ML)**, trace mica, fine to medium grained, light orange and gray, very soft to soft, Residuum	5			1-1-1 N=2		
			tan				1-1-1 N=2		
				10			1-1-2 N=3		
			tan and light gray				1-1-1 N=2		
				15					
			medium stiff	20			1-2-3 N=5		
		23.5	1088						
		25.0	**SANDY SILT (ML)**, fine to medium grained, tan, stiff 1086.5	25			2-5-5 N=10		
			Boring Terminated at 25 Feet						

See Exploration and Testing Procedures for a description of field and laboratory procedures used and additional data (If any).

See Supporting Information for explanation of symbols and abbreviations.

Elevation Reference: Elevations obtained from ESG drawing, Flowery Branch Site, Sheet 1, dated March 6, 2025.

Water Level Observations
While drilling
At completion of drilling

Drill Rig
1306

Hammer Type
Automatic

Driller
A. Downs

Logged by
C. Shubert

Boring Started
02-27-2025

Boring Completed
02-27-2025

Notes

Advancement Method
3.25" HSA

Abandonment Method
Boring backfilled with auger cuttings upon completion.

Terracon
514 Hillcrest Indust. Blvd
Macon, GA

Boring Log No. PD-2

Location: See Exploration Plan

Latitude: 34.1903° Longitude: -83.9186°

Depth (Ft.) Elevation: 1118.1 (Ft.)

Model Layer	Graphic Log	Depth (Ft.)	Water Level Observations	Sample Type	Field Test Results	Water Content (%)	Atterberg Limits LL-PL-PI
1		0.5 **TOPSOIL**, 4" 1117.6					
2		**FILL - SANDY LEAN CLAY (CL)**, trace organics, fine to coarse grained, brown, soft to medium stiff, with rock fragments			2-2-3 N=5	22.0	41-24-17
					2-1-2 N=3		
		with excessive wooden debris			2-2-2 N=4		
					2-2-2 N=4		
		13.5 1104.6 **FILL - SANDY FAT CLAY (CH)**, trace organics, fine to medium grained, tan and dark gray, stiff to very stiff, Debris elevated blow counts			8-10-12 N=22		
		20.0 1098.1 ***Boring Terminated at 20 Feet***			5-6-8 N=14		

See Exploration and Testing Procedures for a description of field and laboratory procedures used and additional data (If any).

See Supporting Information for explanation of symbols and abbreviations.

Elevation Reference: Elevations obtained from ESG drawing, Flowery Branch Site, Sheet 1, dated March 6, 2025.

Water Level Observations
While drilling

Cave in

Drill Rig
1306

Hammer Type
Automatic

Driller
A. Downs

Logged by
C. Shubert

Boring Started
02-27-2025

Boring Completed
02-27-2025

Notes

Advancement Method
3.25" HSA

Abandonment Method
Boring backfilled with auger cuttings upon completion.

Terracon
514 Hillcrest Indust. Blvd
Macon, GA

Boring Log No. P-1

Location: See Exploration Plan

Latitude: 34.1908° Longitude: -83.9185°

Model Layer	Graphic Log	Depth (Ft.)	Elevation: 1118.5 (Ft.)	Depth (Ft.)	Water Level Observations	Sample Type	Field Test Results	Water Content (%)	Atterberg Limits LL-PL-PI
1		0.5	**TOPSOIL**, 4" 1118						
2			**FILL - CLAYEY SAND (SC)**, trace organics, fine to medium grained, gray, medium stiff to stiff				2-3-4 N=7	16.5	28-17-11
			light gray, with rock fragments	5			2-4-9 N=13		
		6.0	1112.5						
5			**ELASTIC SILT (MH)**, trace mica, fine to medium grained, tan, soft, Residuum				1-1-2 N=3		
		8.5	1110						
6			**SANDY SILT WITH GRAVEL (ML)**, trace mica, fine to coarse grained, brown, stiff				2-5-5 N=10		
		10.0	1108.5	10					
			Boring Terminated at 10 Feet						

See Exploration and Testing Procedures for a description of field and laboratory procedures used and additional data (If any).

See Supporting Information for explanation of symbols and abbreviations.

Elevation Reference: Elevations obtained from ESG drawing, Flowery Branch Site, Sheet 1, dated March 6, 2025.

Water Level Observations
Not encountered

Drill Rig
1306

Hammer Type
Automatic

Driller
A. Downs

Notes

Advancement Method
3.25" HSA

Logged by
C. Shubert

Abandonment Method
Boring backfilled with auger cuttings upon completion.

Boring Started
02-27-2025

Boring Completed
02-27-2025

ATTERBERG LIMITS RESULTS

ASTM D4318

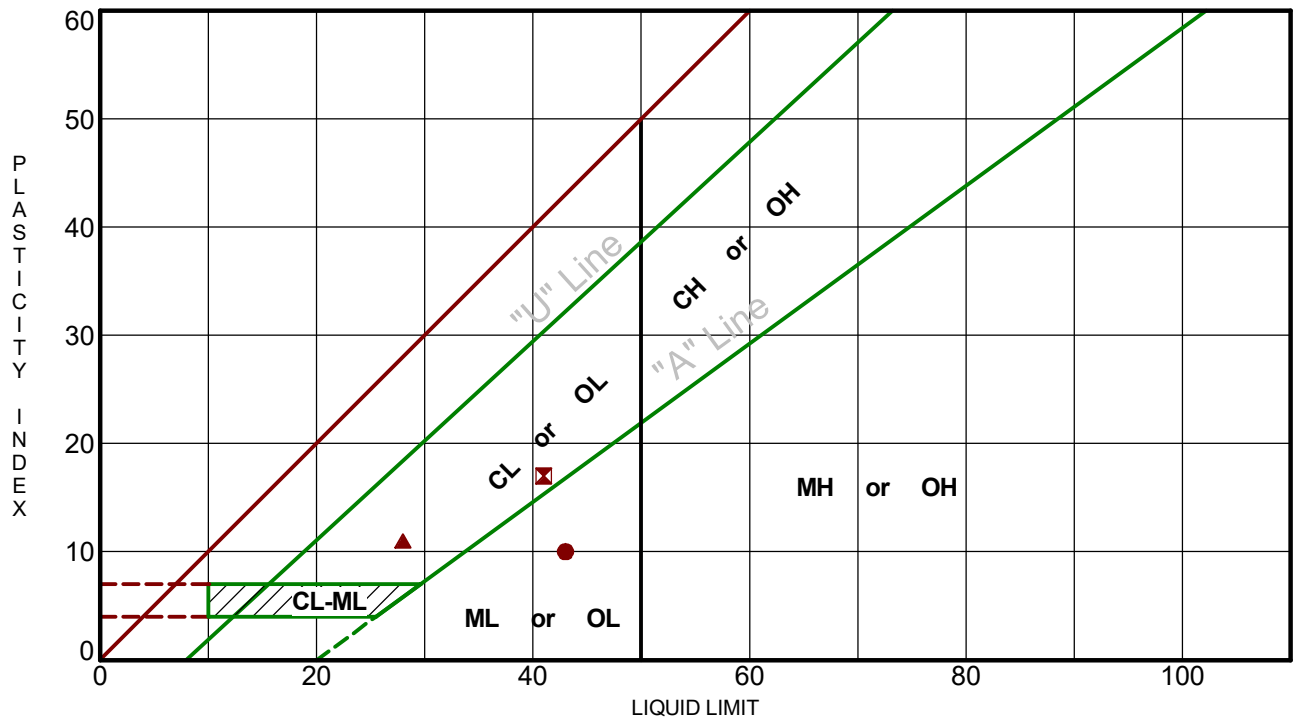

Boring ID		Depth (Ft)	LL	PL	PI	Fines	USCS	Description
●	B-2	3.5 - 5	43	33	10	49.0	SM	Brown SILTY C-F SAND
⊠	PD-2	1 - 2.5	41	24	17	52.8	CL	Brown C-F SANDY LEAN CLAY
▲	P-1	1 - 2.5	28	17	11	46.3	SC	Grey CLAYEY M-F SAND

PROJECT: Drinking Water Site

PROJECT NUMBER: HN255025

SITE: Atlanta Hwy
Flowery Branch, GA

Terracon
514 Hillcrest Indust. Blvd
Macon, GA

CLIENT: ESG Engineering, Inc
Macon, GA

LABORATORY TESTS ARE NOT VALID IF SEPARATED FROM ORIGINAL REPORT. ATTERBERG LIMITS HN255025 DRINKING WATER SI.GPJ TERRACON_DATATEMPLATE.GDT 4/3/25

Terracon
514 Hillcrest Indust. Blvd
Macon, GA

Grain Size Distribution

ASTM D422 / ASTM C136 / AASHTO T27

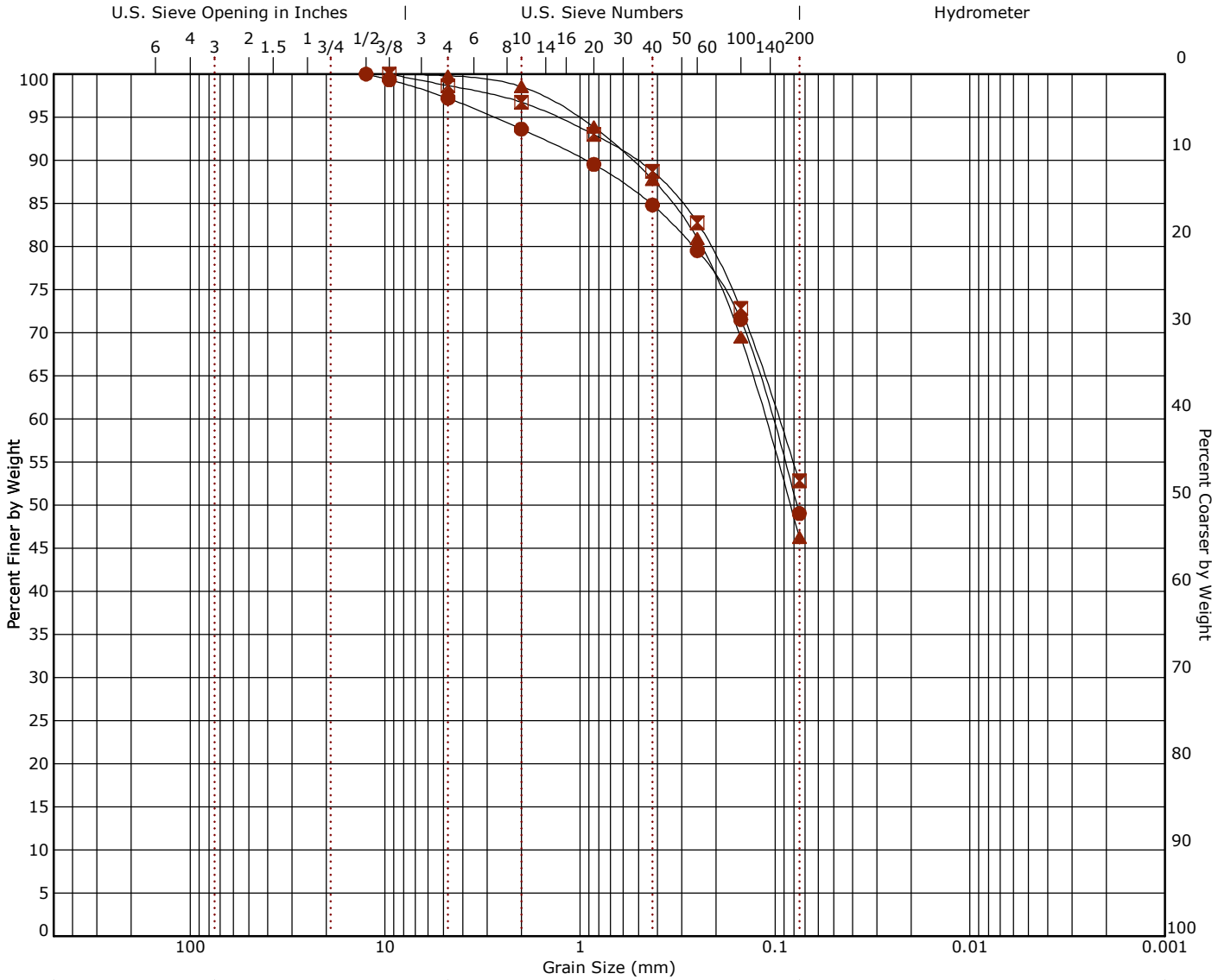

Cobbles	Gravel		Sand			Silt or Clay
	coarse	fine	coarse	medium	fine	

	Boring ID	Depth	% Cobbles	% Gravel	% Sand	% Fines	% Silt	% Clay	USCS
●	B-2	3.5 - 5	0.0	2.8	48.2	49.0			SM
⊠	PD-2	1 - 2.5	0.0	1.3	45.9	52.8			CL
▲	P-1	1 - 2.5	0.0	0.2	53.6	46.3			SC

	Description
●	Brown SILTY C-F SAND
⊠	Brown C-F SANDY LEAN CLAY
▲	Grey CLAYEY M-F SAND

Remarks
●
⊠
▲

● Sieve	● % Finer	⊠ Sieve	⊠ % Finer	▲ Sieve	▲ % Finer
1/2"	100.0	3/8"	100.0	3/8"	100.0
3/8"	99.33	#4	98.67	#4	99.81
#4	97.2	#10	96.74	#10	98.54
#10	93.62	#20	93.0	#20	93.86
#20	89.53	#40	88.73	#40	87.79
#40	84.81	#60	82.78	#60	80.92
#60	79.52	#100	72.84	#100	69.48
#100	71.55	#200	52.8	#200	46.26
#200	49.02				

Grain Size	●	⊠	▲
D_{60}	0.105	0.096	0.113
D_{10}			

Coefficients	●	⊠	▲
C_c			
C_u			

Supporting Information

Contents:

General Notes
Unified Soil Classification System

Note: All attachments are one page unless noted above.

Terracon
514 Hillcrest Indust. Blvd
Macon, GA

General Notes

Sampling	Water Level	Field Tests
 Split Spoon	 Water Initially Encountered  Water Level After a Specified Period of Time  Water Level After a Specified Period of Time  Cave In Encountered Water levels indicated on the soil boring logs are the levels measured in the borehole at the times indicated. Groundwater level variations will occur over time. In low permeability soils, accurate determination of groundwater levels is not possible with short term water level observations.	N Standard Penetration Test Resistance (Blows/Ft.) (HP) Hand Penetrometer (T) Torvane (DCP) Dynamic Cone Penetrometer UC Unconfined Compressive Strength (PID) Photo-Ionization Detector (OVA) Organic Vapor Analyzer

Descriptive Soil Classification

Soil classification as noted on the soil boring logs is based Unified Soil Classification System. Where sufficient laboratory data exist to classify the soils consistent with ASTM D2487 "Classification of Soils for Engineering Purposes" this procedure is used. ASTM D2488 "Description and Identification of Soils (Visual-Manual Procedure)" is also used to classify the soils, particularly where insufficient laboratory data exist to classify the soils in accordance with ASTM D2487. In addition to USCS classification, coarse grained soils are classified on the basis of their in-place relative density, and fine-grained soils are classified on the basis of their consistency. See "Strength Terms" table below for details. The ASTM standards noted above are for reference to methodology in general. In some cases, variations to methods are applied as a result of local practice or professional judgment.

Location And Elevation Notes

Exploration point locations as shown on the Exploration Plan and as noted on the soil boring logs in the form of Latitude and Longitude are approximate. See Exploration and Testing Procedures in the report for the methods used to locate the exploration points for this project. Surface elevation data annotated with +/- indicates that no actual topographical survey was conducted to confirm the surface elevation. Instead, the surface elevation was approximately determined from topographic maps of the area.

Strength Terms

Relative Density of Coarse-Grained Soils (More than 50% retained on No. 200 sieve.) Density determined by Standard Penetration Resistance		Consistency of Fine-Grained Soils (50% or more passing the No. 200 sieve.) Consistency determined by laboratory shear strength testing, field visual-manual procedures or standard penetration resistance		
Relative Density	**Standard Penetration or N-Value (Blows/Ft.)**	**Consistency**	**Unconfined Compressive Strength Qu (tsf)**	**Standard Penetration or N-Value (Blows/Ft.)**
Very Loose	0 - 3	Very Soft	less than 0.25	0 - 1
Loose	4 - 9	Soft	0.25 to 0.50	2 - 4
Medium Dense	10 - 29	Medium Stiff	0.50 to 1.00	4 - 8
Dense	30 - 50	Stiff	1.00 to 2.00	8 - 15
Very Dense	> 50	Very Stiff	2.00 to 4.00	15 - 30
		Hard	> 4.00	> 30

Relevance of Exploration and Laboratory Test Results

Exploration/field results and/or laboratory test data contained within this document are intended for application to the project as described in this document. Use of such exploration/field results and/or laboratory test data should not be used independently of this document.

Unified Soil Classification System

Criteria for Assigning Group Symbols and Group Names Using Laboratory Tests [A]				Soil Classification	
				Group Symbol	Group Name [B]
Coarse-Grained Soils: More than 50% retained on No. 4 sieve	**Gravels:** More than 50% of coarse fraction retained on No. 4 sieve	**Clean Gravels:** Less than 5% fines [C]	Cu≥4 and 1≤Cc≤3 [E]	GW	Well-graded gravel [F]
			Cu<4 and/or [Cc<1 or Cc>3.0] [E]	GP	Poorly graded gravel [F]
		Gravels with Fines: More than 12% fines [C]	Fines classify as ML or MH	GM	Silty gravel [F, G, H]
			Fines classify as CL or CH	GC	Clayey gravel [F, G, H]
	Sands: 50% or more of coarse fraction passes No. 4 sieve	**Clean Sands:** Less than 5% fines [D]	Cu≥6 and 1≤Cc≤3 [E]	SW	Well-graded sand [I]
			Cu<6 and/or [Cc<1 or Cc>3.0] [E]	SP	Poorly graded sand [I]
		Sands with Fines: More than 12% fines [D]	Fines classify as ML or MH	SM	Silty sand [G, H, I]
			Fines classify as CL or CH	SC	Clayey sand [G, H, I]
Fine-Grained Soils: 50% or more passes the No. 200 sieve	**Silts and Clays:** Liquid limit less than 50	**Inorganic:**	PI > 7 and plots above "A" line [J]	CL	Lean clay [K, L, M]
			PI < 4 or plots below "A" line [J]	ML	Silt [K, L, M]
		Organic:	$\frac{LL\ oven\ dried}{LL\ not\ dried} < 0.75$	OL	Organic clay [K, L, M, N]
					Organic silt [K, L, M, O]
	Silts and Clays: Liquid limit 50 or more	**Inorganic:**	PI plots on or above "A" line	CH	Fat clay [K, L, M]
			PI plots below "A" line	MH	Elastic silt [K, L, M]
		Organic:	$\frac{LL\ oven\ dried}{LL\ not\ dried} < 0.75$	OH	Organic clay [K, L, M, P]
					Organic silt [K, L, M, Q]
Highly organic soils:	Primarily organic matter, dark in color, and organic odor			PT	Peat

[A] Based on the material passing the 3-inch (75-mm) sieve.
[B] If field sample contained cobbles or boulders, or both, add "with cobbles or boulders, or both" to group name.
[C] Gravels with 5 to 12% fines require dual symbols: GW-GM well-graded gravel with silt, GW-GC well-graded gravel with clay, GP-GM poorly graded gravel with silt, GP-GC poorly graded gravel with clay.
[D] Sands with 5 to 12% fines require dual symbols: SW-SM well-graded sand with silt, SW-SC well-graded sand with clay, SP-SM poorly graded sand with silt, SP-SC poorly graded sand with clay.
[E] $Cu = D_{60}/D_{10}$ $Cc = \frac{(D_{30})^2}{D_{10} \times D_{60}}$
[F] If soil contains ≥ 15% sand, add "with sand" to group name.
[G] If fines classify as CL-ML, use dual symbol GC-GM, or SC-SM.
[H] If fines are organic, add "with organic fines" to group name.
[I] If soil contains ≥ 15% gravel, add "with gravel" to group name.
[J] If Atterberg limits plot in shaded area, soil is a CL-ML, silty clay.
[K] If soil contains 15 to 29% plus No. 200, add "with sand" or "with gravel," whichever is predominant.
[L] If soil contains ≥ 30% plus No. 200 predominantly sand, add "sandy" to group name.
[M] If soil contains ≥ 30% plus No. 200, predominantly gravel, add "gravelly" to group name.
[N] PI ≥ 4 and plots on or above "A" line.
[O] PI < 4 or plots below "A" line.
[P] PI plots on or above "A" line.
[Q] PI plots below "A" line.

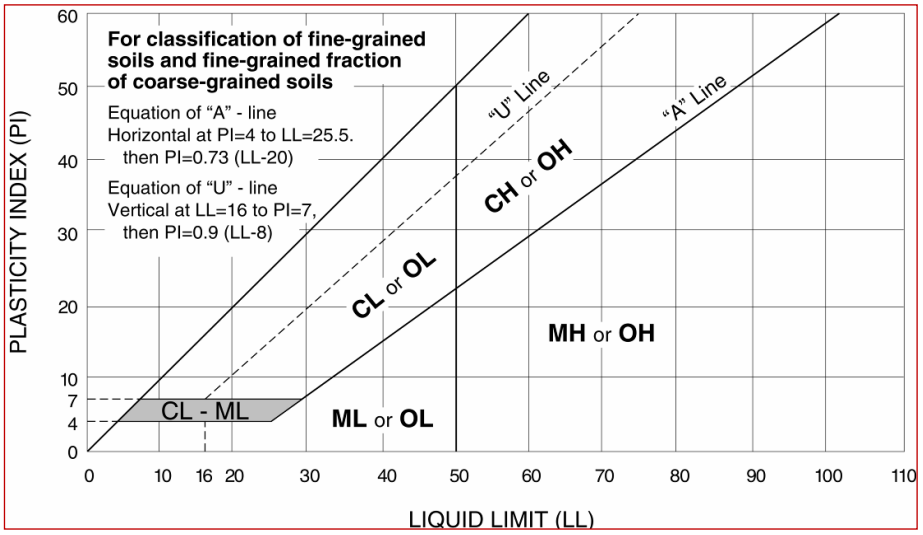

GROUNDWATER WELLS #4 & #5

FOR THE

CITY OF FLOWERY BRANCH

HALL COUNTY, GA

DECEMBER 2025

F0002.018

CITY COUNCIL

OLIVER McCLELLAN	MAYOR
CHRIS MUNDY	POST 1 COUNCIL MEMBER
JOSEPH MEZZANOTTE	POST 2 COUNCIL MEMBER
WILLIAM McDANIEL	POST 3 COUNCIL MEMBER
CHARLES VANDERBILT	POST 4 COUNCIL MEMBER
PETER LENA	POST 5 COUNCIL MEMBER
TONYA PARRISH	CITY MANAGER

PROJECT CONTACTS:

1. OWNER / DEVELOPER:
   CITY OF FLOWERY BRANCH
   5410 PINE STREET
   FLOWERY BRANCH, GEORGIA 30542
   PHONE: 770-967-6371

2. PROJECT MANAGER:
   ANDREW SWICEGOOD, PE
   ESG ENGINEERING, LLC
   6400 PEAKE ROAD
   MACON, GEORGIA 31210
   PHONE: 478-718-4426
   ANDREW.SWICEGOOD@ESGENGINEERING.COM

3. 24-HOUR EROSION, SEDIMENTATION, & POLLUTION CONTROL CONTACT:
   TREY CRISP
   478-335-4612

I CERTIFY THAT THE PERMITTEE'S EROSION, SEDIMENTATION AND POLLUTION CONTROL PLAN PROVIDES FOR AN APPROPRIATE AND COMPREHENSIVE SYSTEM OF BEST MANAGEMENT PRACTICES REQUIRED BY THE GEORGIA WATER QUALITY CONTROL ACT AND THE DOCUMENT "MANUAL FOR EROSION AND SEDIMENT CONTROL IN GEORGIA" (MANUAL) PUBLISHED BY THE GEORGIA SOIL AND WATER CONSERVATION COMMISSION AS OF JANUARY 1 OF THE YEAR IN WHICH THE LAND-DISTURBING ACTIVITY WAS PERMITTED, PROVIDES FOR THE SAMPLING OF THE RECEIVING WATER(S) OR THE SAMPLING OF THE STORMWATER OUTFALLS AND THAT THE DESIGNED SYSTEM OF BEST MANAGEMENT PRACTICES AND SAMPLING METHODS IS EXPECTED TO MEET THE REQUIREMENTS CONTAINED IN THE GENERAL NPDES PERMIT NO. GAR100001.

I CERTIFY UNDER PENALTY OF LAW THAT THIS PLAN WAS PREPARED AFTER A SITE VISIT TO THE LOCATIONS DESCRIBED HEREIN BY MYSELF OR MY AUTHORIZED AGENT, UNDER MY SUPERVISION.

DELMAS S CRISP	0000100336	OCTOBER 3, 2025
LEVEL II DESIGN PERSONNEL	LEVEL II CERTIFICATION NO.	DATE

CONSTRUCTION EXIT
LATITUDE - 34° 11' 25.36" N
LONGITUDE - 83° 55' 8.45" W

GSWCC GEORGIA SOIL AND WATER CONSERVATION COMMISSION

Delmas S Crisp III
LEVEL II CERTIFIED DESIGN PROFESSIONAL

CERTIFICATION NUMBER: 0000100336
ISSUED: 11/08/2023 EXPIRED: 11/08/2028



PROJECT LOCATION

INDEX TO DRAWINGS

Sheet List Table	
SHEET NUMBER	SHEET TITLE
C0.0	COVER SHEET
C0.1	GENERAL NOTES
C1.0	EXISTING CONDITIONS & DEMOLTION PLAN
C2.0	SITE PLAN
C2.1	BUILDING PIPING PLAN
C2.2	BUILDING DETAIL PLAN
C3.0	GRADING & DRAINAGE PLAN
C4.0	UTILITY PLAN
C4.1	WATER MAIN EXTENSION PLAN
C5.0 - C5.2	BUILDING ELEVATIONS
C5.3	SANITARY SEWER PROFILES
C6.0	HYDROLOGY PLAN
C7.0 - C7.2	EROSION, SEDIMENTATION, & POLLUTION CONTROL DETAILS
C8.0 - C8.2	EROSION, SEDIMENTATION, & POLLUTION CONTROL PLAN (WELL SITE IMPROVEMENTS)
C8.3 - C8.5	EROSION, SEDIMENTATION, & POLLUTION CONTROL PLAN (WATER MAIN EXTENSION)
C9.0 - C9.5	CONSTRUCTION DETAILS
L1.0	LANDSCAPING PLAN
S1 - S2	STRUCTURAL PLAN
M0.1 - M0.2, M1.0	MECHANICAL PLAN SHEETS
E1.0 - E6.1	ELECTRICAL PLAN SHEETS
P0.1 & P1.0	PLUMBING PLAN SHEETS

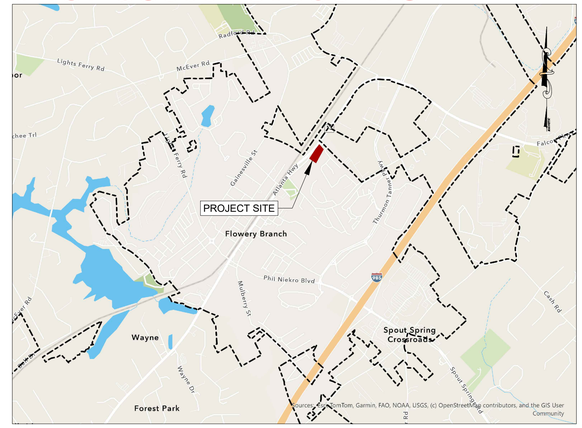

PROJECT VICINITY MAP
N.T.S.

ESG ENGINEERING
6400 Peake Rd
Macon, GA 31210
Ph: (478) 474-4996
Fax: (478) 474-5045

GROUNDWATER WELLS #4 & #5
FOR THE
CITY OF FLOWERY BRANCH

REVISIONS

NO.	DESCRIPTION	DATE
1	ESPC SHEETS	11-7-25
2	BID SET OF PLANS	12-1-25
3	REVISED WITH CITY COMMENTS	12-5-25
4	ADDENDUM #1	12-8-25
5	ADDENDUM #2	12-11-25
6	ADDENDUM #3	12-12-25
7	REVISED WITH CITY COMMENTS	12-17-25

CONFORMED SET

GEORGIA REGISTERED No. PE046341 PROFESSIONAL ENGINEER ANDREW D SWICEGOOD

DRAWN BY: DSC
CHECKED BY: ADS
DATE: DEC 2025
SCALE: N.T.S.

CONTENT:
COVER SHEET

SHEET NO: C0.0

UTILITY PROVIDERS	
POWER	CITY OF FLOWERY BRANCH - 770-967-6371
	GEORGIA POWER - 888-660-5890
NATURAL GAS	ATLANTA GAS LIGHT - 800-427-5463
	GAS SOUTH - 877-472-4932
	GEORGIA NATURAL GAS - 800-427-5463
	SCANA ENERGY - 877-467-2262
WATER SERVICE & SANITARY SEWER	CITY OF FLOWERY BRANCH - PETER WOERNER - 706-982-0751
	GAINESVILLE WATER - 770-535-6878
TELECOMMUNICATIONS	EARTHLINK FIBER - 833-906-6020
	AT&T - 877-516-2469
	CHARTER (SPECTRUM) - 770-628-5918
	CENTURY LINK (LUMEN) - 877-453-8353
	COMCAST (XFINITY) - 770-628-5960

PROPOSED LINE LEGEND	PROPOSED SYMBOL LEGEND
PROPERTY LINE	LIGHT POLE / POWER POLE (LP) (PP)
RIGHT-OF-WAY	GAS METER / WATER METER (GM) (WM)
SETBACK / BUFFER	GAS VALVE / WATER VALVE (GV) (WV)
EASEMENT	SANITARY/STORM CLEANOUT (SS CO) (ST CO)
LIMITS OF DISTURBANCE	SANITARY/STORM MANHOLE (SS) (ST)
SURFACE MAJOR CONTOUR	BACK FLOW PREVENTION (RPZ) (DDCV)
SURFACE MINOR CONTOUR	FIRE DEPARTMENT CONNECTION / POST INDICATOR VALVE (FDC) (PIV)
SWALE / DITCH	FIRE HYDRANT / HOSE BIB (HYD) (HB)
SILT FENCE	WELL HEAD (W)
OVERHEAD ELECTRIC	STORM GRATE/COMBO INLET (2'x2') (2'x3')
UNDERGROUND POWER	STORM CURB INLET
NATURAL GAS	FLARED/SAFETY END SECTION
SAN. FORCE MAIN	STRAIGHT/WINGED HEADWALL
SANITARY LATERAL	OUTLET CONTROL STRUCTURE
SAN. SEWER GRAVITY MAIN	
TELECOMMUNICATIONS	
WATER SERVICE	
WATER MAIN	
STORM SEWER	

SITE INFORMATION	
OWNER / DEVELOPER	CITY OF FLOWERY BRANCH 5410 PINE STREET FLOWERY BRANCH, GA, 30542 770-967-6371 EXT. 106 tonya@flowerybranchga.com
PROJECT ADDRESS	4745 ATLANTA HWY FLOWERY BRANCH, GA, 30542
TAX MAP & PARCEL NUMBER	08098 001001 THRU 08098 001004
ZONING / LAND USE	H-B
PROJECT AREA	2.14 ACRES
DISTURBED AREA	0.86 ACRES
BUILDING AREA	400 SQUARE FEET
IMPERVIOUS AREA	0.032 ACRES
PROPOSED USE	GROUNDWATER WELL RESTORATION

2

SITE INFORMATION	
PROJECT ADDRESS	4745 ATLANTA HWY
PARCEL NUMBER	08098 001001 THRU 08098 001004
PARCEL ZONING	H-B
PROJECT AREA	2.14 ACRES
BUILDING SETBACK	
FRONT	NONE
REAR	30'
SIDE	10'
LANDSCAPING BUFFER	
FRONT	10'
REAR	30'
SIDE	NONE

GENERAL NOTES

1. CONTRACTOR SHALL ADHERE TO ALL LOCAL, STATE, AND FEDERAL REGULATIONS.
2. CONTRACTOR SHALL COORDINATE ALL CONSTRUCTION WITH THE OWNER.
3. THE CONTRACTOR SHALL PROVIDE 72 HOUR NOTICE TO THE UTILITIES PROTECTION CENTER PRIOR TO CONSTRUCTION COMMENCEMENT OR EXCAVATION.
4. THE CONTRACTOR IS SPECIFICALLY CAUTIONED THAT THE LOCATIONS AND/OR ELEVATIONS OF EXISTING INFRASTRUCTURE AS SHOWN ON THESE PLANS ARE BASED ON EXISTING RECORDS AND WHERE POSSIBLE, MEASUREMENTS TAKEN IN THE FIELD. THIS INFORMATION IS NOT TO BE RELIED ON AS BEING EXACT OR COMPLETE. IT SHALL BE THE RESPONSIBILITY OF THE CONTRACTOR TO EVALUATE ALL EXISTING INFRASTRUCTURE WHICH MAY CONFLICT WITH THE PROPOSED IMPROVEMENTS SHOWN ON THE PLANS AND COORDINATE WITH THE ENGINEER FOR ADJUSTMENT OF THE WORK AS NECESSARY TO MAINTAIN ADEQUATE SEPARATION SHOULD A CONFLICT ARISE. CONTRACTOR SHALL FIELD-VERIFY (BY POT HOLING) ALL EXISTING UTILITIES PRIOR TO AND DURING CONSTRUCTION.
5. ALL IN-PLACE ITEMS WILL BE PROTECTED BY THE CONTRACTOR DURING CONSTRUCTION. ANY DAMAGES WILL BE REPAIRED TO THE RESPECTIVE OWNER'S SATISFACTION BY THE CONTRACTOR AT HIS/HER EXPENSE. CONTRACTOR SHALL MATCH EXISTING GRASS WHEN REPAIRING DISTURBED AREAS.
6. CONTRACTOR SHALL PROTECT ALL EXISTING UTILITIES. CONTRACTOR SHALL, AT HIS OWN EXPENSE, REPAIR OR REPLACE ANY DAMAGED UTILITIES TO THE RESPECTIVE OWNER'S SATISFACTION.
7. THE CONTRACTOR SHALL BE RESPONSIBLE FOR THE DESIGN, PERMITTING, AND IMPLEMENTATION OF ALL SHEETING, SHORING, BRACING, DE-WATERING, AND SPECIAL EXCAVATION MEASURES REQUIRED TO MEET OSHA, FEDERAL, STATE, AND LOCAL REGULATIONS PURSUANT TO THE INSTALLATION OF THE WORK INDICATED ON THESE DRAWINGS, AS WELL AS SUBSEQUENT WORK AGREED TO BETWEEN THE OWNER AND CONTRACTOR. THE OWNER AND THE DESIGN ENGINEER ACCEPT NO RESPONSIBILITY FOR THE DESIGN(S) TO INSTALL SAID ITEMS.
8. ALL CONSTRUCTION STAKING SHALL BE BY THE CONTRACTOR AT HIS EXPENSE.
9. CONTRACTOR SHALL NOT DISTURB AREAS OUTSIDE OF THE PROJECT SITE/RIGHT OF WAY WITHOUT THE NECESSARY PERMITS/EASEMENTS.
10. EXISTING ROAD SHOULDERS SHALL BE BACKFILLED AND GRASSED. ANY DISTURBED SIDEWALK OR CURB & GUTTER SHALL BE REPAIRED TO MATCH EXISTING.
11. CONTRACTOR SHALL REPLACE ALL DISTURBED TRAFFIC STRIPING, PAVEMENT MARKINGS, MAILBOXES, AND SIGNAGE TO MATCH EXISTING.
12. NO WORK SHALL BEGIN ON THIS PROJECT WITHOUT AT LEAST 24 HOURS ADVANCE NOTIFICATION TO THE OWNER AND THE ENGINEER. IN ADDITION, NO WORK IS TO TAKE PLACE WITHOUT AN APPROVED SET OF PLANS AND SPECIFICATIONS ON THE JOB SITE. WORK IS TO BE COORDINATED WITH ALL OTHER OPERATIONS ACTIVITIES.
13. IT IS THE RESPONSIBILITY OF THE CONTRACTOR TO ENSURE THAT ALL REQUIRED PERMITS ARE OBTAINED AND IN HAND PRIOR TO THE COMMENCEMENT OF CONSTRUCTION.
14. THE CONTRACTOR SHALL BE RESPONSIBLE FOR FURNISHING ALL FILL MATERIAL. FILL MATERIAL SHALL BE CLEAN AND FREE OF ALL DEBRIS AND ORGANIC MATERIAL.
15. THE CONTRACTOR SHALL MAKE HIS OWN DETERMINATION OF ALL SURFACE AND SUBSURFACE CONDITIONS. THE CONTRACTOR WITH CONSULTATION FROM THE ENGINEER SHALL TOGETHER DETERMINE WHAT MATERIAL, IF ANY, IS TO BE WASTED.
16. ALL FIELD CHANGES SHALL BE AUTHORIZED BY THE OWNER IN WRITING IN ADVANCE OF THE WORK. IF CHANGES ARE MADE BY THE CONTRACTOR WITHOUT PRIOR WRITTEN CONSENT FROM THE OWNER, CONTRACTOR SHALL BEAR FULL RESPONSIBILITY FOR MAKING THE NECESSARY CHANGES TO BRING THE CONSTRUCTION INTO CONFORMANCE WITH APPROVED PLANS AND SPECIFICATIONS AT NO COST TO THE OWNER.
17. THE AREAS DISTURBED BY THE CONTRACTOR SHALL BE RESTORED TO THEIR ORIGINAL CONDITION UNLESS OTHERWISE NOTED ON THE PLANS.
18. ALL WATER UTILIZED DURING CONSTRUCTION SHALL BE METERED THROUGH A CONSTRUCTION WATER METER (OBTAINED FROM THE UTILITY OWNER) EQUIPPED WITH AN APPROVED BACKFLOW DEVICE.
19. IT SHALL BE THE RESPONSIBILITY OF THE CONTRACTOR TO FIELD VERIFY ALL PROPOSED CONSTRUCTION FOR FEASIBILITY AND FUNCTION. THE CONTRACTOR SHALL IMMEDIATELY NOTIFY THE ENGINEER OF ANY DISCREPANCIES OR WARRANTED CONCERNS PERTAINING TO DESIGN AND CONSTRUCTION.
20. CONSTRUCTION LAYDOWN AREAS AND STAGING TO BE AT LOCATIONS APPROVED OF BY THE OWNER.
21. THE CONTRACTOR SHALL PLAN, COORDINATE, AND EXECUTE THE WORK SUCH THAT DISRUPTION TO PERSONAL PROPERTY AND BUSINESS IS HELD TO A PRACTICAL MINIMUM.
22. All CONSTRUCTION AREAS ABUTTING LAWNS AND YARDS OF RESIDENTIAL OR COMMERCIAL PROPERTY SHALL BE RESTORED PROMPTLY. BACKFILLING OF UNDERGROUND FACILITIES, DITCHES, AND DISTURBED AREAS SHALL BE ACCOMPLISHED ON A DAILY BASIS.
23. HANDWORK, INCLUDING RAKING AND SMOOTHING, SHALL BE REQUIRED TO ENSURE THAT THE REMOVAL OF ROOTS, STICKS, ROCKS, AND OTHER DEBRIS IS ACCOMPLISHED IN ORDER TO PROVIDE A NEAT AND PLEASING APPEARANCE. GRASSING, WHEN IN SEASON, SHALL IMMEDIATELY FOLLOW IN ORDER TO ESTABLISH PERMANENT COVER AT THE EARLIEST DATE. IF GRASSING IS NOT IN SEASON, PROPER EROSION CONTROL SHALL BE INSTALLED AND MAINTAINED.
24. THE CONTRACTOR SHALL BE ORDERED TO STOP ALL WORK BY THE ENGINEER WHEN RESTORATION AND CLEANUP ARE UNSATISFACTORY, AND TO REQUIRE APPROPRIATE REMEDIAL MEASURES.

AS-BUILT RECORD DRAWINGS

1. AFTER THE FINAL INSPECTION HAS BEEN PERFORMED AND ALL ITEMS ARE SATISFACTORY TO THE CITY, AS-BUILTS SHALL BE SUBMITTED TO THE ENGINEER ALONG WITH A LETTER OF TRANSMITTAL. ACCEPTABLE SUBMITTALS WILL BE APPROVED IN WRITING. SUBMITTALS REQUIRING CORRECTIONS BEFORE BEING ACCEPTABLE WILL BE SO NOTED. AS-BUILTS MUST BE RESUBMITTED FOR REVIEW AND APPROVAL PRIOR TO THE LETTER OF ACCEPTANCE BEING ISSUED BY THE ENGINEER(S).
2. CONTRACTOR SHALL MAINTAIN FIELD "AS-BUILT" DRAWINGS AND SHALL MEASURE AND SHOW LOCATIONS OF ALL PROPOSED INFRASTRUCTURE. AS-BUILT DRAWINGS SHALL PROVIDE RIM AND INVERT ELEVATIONS OF ALL MANHOLES & PIPES.
3. CONTRACTOR SHALL PROVIDE THE ENGINEER WITH DIGITAL AND PAPER AS-BUILT RECORD DRAWINGS OF THE CONSTRUCTED IMPROVEMENTS.

TRAFFIC CONTROL NOTES

1. CONTRACTOR SHALL BE RESPONSIBLE FOR ALL TRAFFIC CONTROL, INCLUDING DEVICES, MATERIALS, PERSONNEL, PROCEDURES, OPERATIONS, AND COORDINATION. ALL TRAFFIC CONTROL SHALL BE IN ACCORDANCE WITH THE *MANUAL OF UNIFORM TRAFFIC CONTROL DEVICES (MUTCD), CURRENT EDITION* AND ALL GDOT AND LOCAL REQUIREMENTS.
2. ACCESS TO ALL ADJACENT PROPERTIES SHALL BE MAINTAINED AT ALL TIMES.
3. CONTRACTOR SHALL NOT LEAVE ANY OPEN TRENCHES OVER NIGHT. ALL TRENCHES SHALL BE BACKFILLED OR PLATED DAILY.

EROSION & SEDIMENTATION CONTROL NOTES

1. ALL EROSION AND SEDIMENT CONTROL MEASURES SHALL BE THE RESPONSIBILITY OF THE CONTRACTOR.
2. CONTRACTOR SHALL HAVE SOIL EROSION CONTROL MEASURES IN PLACE PRIOR TO THE START OF CONSTRUCTION ACTIVITIES.
3. CONTRACTOR SHALL PLACE TEMPORARY AND/OR PERMANENT GRASSING ON ALL DISTURBED PERVIOUS AREAS. CONTRACTOR SHALL INSTALL SINGLE-ROW ("TYPE A") SILT FENCE ALONG THE DOWNSTREAM EDGE OF ALL DISTURBED PERVIOUS AREAS AND INSTALL DOUBLE-ROW ("TYPE C") SILT FENCE ADJACENT TO STREAM BUFFERS. CONTRACTOR SHALL INSTALL CHECK DAMS AT 2' VERTICAL INTERVALS WHERE PROPOSED CONSTRUCTION DISTURBS OR PARALLELS ROADSIDE DRAINAGE DITCHES. 2
4. CONTRACTOR SHALL PROTECT ALL EXISTING & PROPOSED STORM STRUCTURES WITHIN THE PROJECT AREA WITH INLET PROTECTION THROUGHOUT CONSTRUCTION.

PROJECT SITE NOTES:

1. THE EXISTING CONDITIONS SURVEY WAS PROVIDED BY EMC ENGINEERING SERVICES, IMC. AND DATED 03/04/2025.
   A COPY CAN BE PROVIDED UPON WRITTEN REQUEST.
2. REPORTS:
   A. TERRACON PERFORMED A GEOTECHNICAL INVESTIGATION, AND THE SUBSEQUENT REPORT IS PROVIDED IN THE CONSTRUCTION DOCUMENTS AS APPENDIX A.
   B. NO ENVIRONMENTAL ASSESSMENT HAS BEEN PERFORMED FOR THE PROJECT AREA. THE CONTRACTOR SHALL NOTIFY THE ENGINEER WITHIN 24 HOURS OF ANY ENVIRONMENTAL CONCERN ENCOUNTERED WITHIN THE PROJECT AREA.
   C. NO ACM SURVEY HAS BEEN PERFORMED. THE CONTRACTOR SHALL TAKE CARE WHEN HANDLING ANY MATERIAL SUSPECTED TO CONTAIN ASBESTOS. THE CONTRACTOR SHALL PROPERLY DISPOSE OF ALL MATERIAL CONTAINING ASBESTOS.
3. THE PROJECT GENERALLY INCLUDES THE CONSTRUCTION OF A WELL HOUSE BUILDING AND WATER LINE EXTENSION OF TWO PREVIOUSLY OWNED STATE WELLS THAT THE CITY OF FLOWERY BRANCH PURCHASED. THE PROJECT CONSISTS OF MAKING THE WELLS A SUPPORT TO THE CURRENT DRINKING WATER SYSTEM. THE PROJECT WILL INVOLVE TRAFFIC CONTROL, EROSION CONTROL, AND ANY ANCILLARY ITEMS NECESSARY FOR PROJECT COMPLETION. PORTIONS OF THE WORK WILL TAKE PLACE WITHIN GDOT RIGHT-OF-WAY WHERE PERMITS HAVE BEEN APPROVED.
4. THE PROPOSED DEVELOPMENTS ARE LOCATED AT THE INTERSECTION OF: 4745 ATLANTA HIGHWAY AT THE NORTH END OF E RAILROAD AVENUE INTERSECTION.
5. HORIZONTAL DATA SHOWN HEREON IS BASED ON NAD83 GEORGIA STATE PLANES, WEST ZONE, US FOOT. VERTICAL DATA SHOWN HEREON IS BASED ON NAVD88 (1988).
6. THE TOTAL PROJECT SITE FOR THE MULTI-USE FACILITY IS 2.14 ACRES WITH A DISTURBED AREA OF 0.86 ACRES.
7. WETLANDS HAVE BEEN IDENTIFIED NEAR THE PROJECT AREA.
8. STATE WATERS HAVE BEEN IDENTIFIED ON OR WITHIN 200' FEET OF THE PROJECT AREA.
9. THE RECEIVING WATERS FOR THE PROJECT HAS BEEN IDENTIFIED AS LAKE LANIER.
10. IMPAIRED WATERS HAVE BEEN IDENTIFIED WITHIN 1 MILE OF THE PROJECT AREA FOR THE PROJECT. THE IMPAIRED WATER IS IDENTIFIED AS FLOWERY BRANCH; A TRIBUTARY OF LAKE LANIER.
11. THE PROPERTIES SHOWN HEREON ARE LOCATED IN FLOOD ZONE X AS PER FLOOD INSURANCE RATE MAP FOR FLOWERY BRANCH, HALL COUNTY, GA AND SHOWN ON MAP NO. 13139C0283G WITH AN EFFECTIVE DATE OF APRIL 4, 2018. FLOOD ZONE X DENOTES AREA OF MINIMAL FLOOD CONCERNS.

ESG ENGINEERING
6400 Peake Rd
Macon, GA 31210
Ph: (478) 474-4996
Fax: (478) 474-5045

GROUNDWATER WELLS #4 & #5

FOR THE
CITY OF FLOWERY BRANCH

REVISIONS

DESCRIPTION	DATE
1 ESPC SHEETS	11-7-25
2 BID SET OF PLANS	12-1-25
3 REVISED WITH CITY COMMENTS	12-5-25
4 ADDENDUM #1	12-8-25
5 ADDENDUM #2	12-11-25
6 ADDENDUM #3	12-12-25
7 REVISED WITH CITY COMMENTS	12-17-25

CONFORMED SET

GEORGIA REGISTERED No. PE046341 PROFESSIONAL ENGINEER ANDREW D SWICEGOOD

DRAWN BY: DSC
CHECKED BY: ADS
DATE: OCT 2025
SCALE: N.T.S.

CONTENT:

GENERAL NOTES

SHEET NO: 2
C0.1

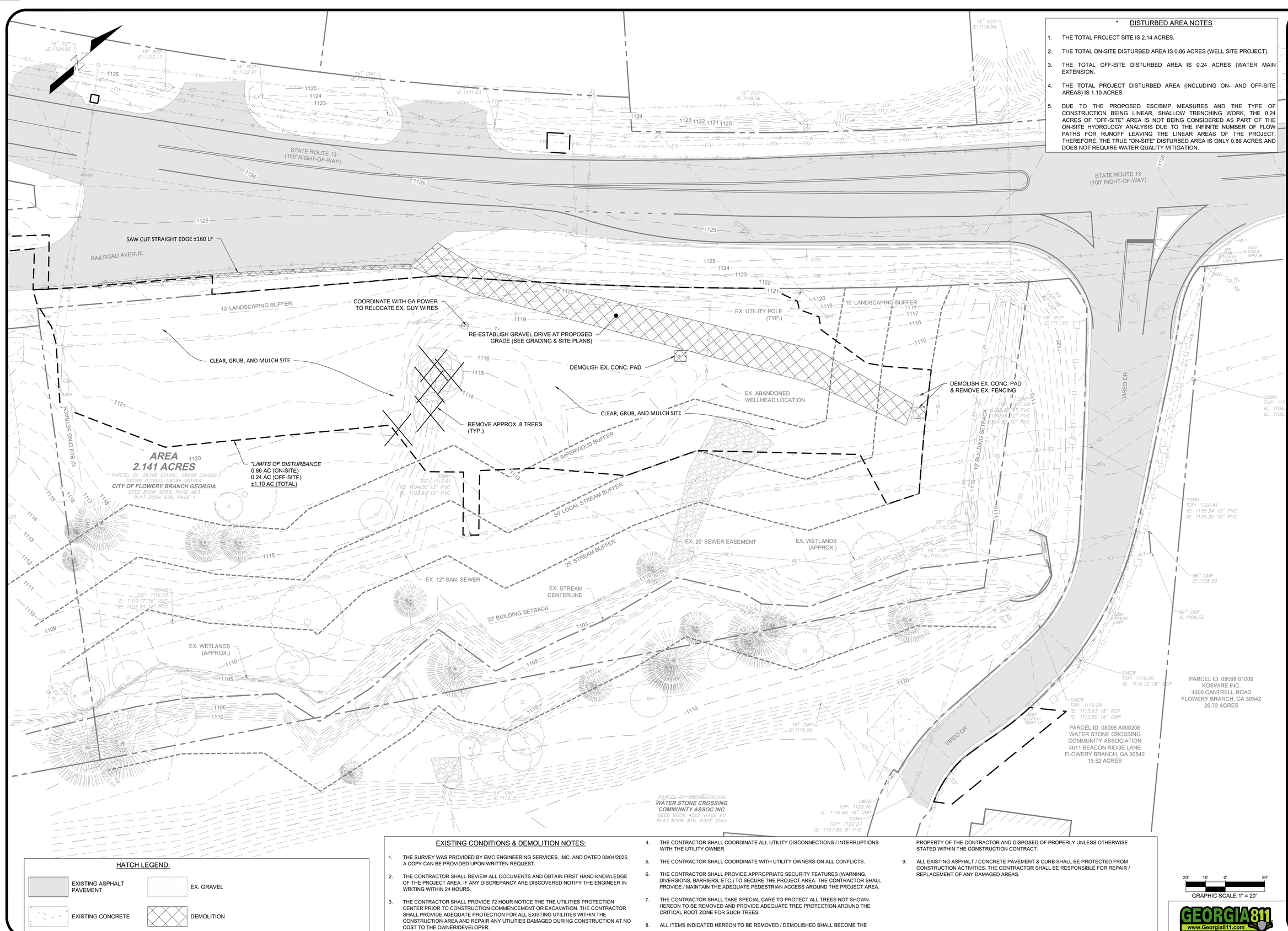

* DISTURBED AREA NOTES

1. THE TOTAL PROJECT SITE IS 2.14 ACRES.
2. THE TOTAL ON-SITE DISTURBED AREA IS 0.86 ACRES (WELL SITE PROJECT).
3. THE TOTAL OFF-SITE DISTURBED AREA IS 0.24 ACRES (WATER MAIN EXTENSION.
4. THE TOTAL PROJECT DISTURBED AREA (INCLUDING ON- AND OFF-SITE AREAS) IS 1.10 ACRES.
5. DUE TO THE PROPOSED ESC/BMP MEASURES AND THE TYPE OF CONSTRUCTION BEING LINEAR, SHALLOW TRENCHING WORK, THE 0.24 ACRES OF "OFF-SITE" AREA IS NOT BEING CONSIDERED AS PART OF THE ON-SITE HYDROLOGY ANALYSIS DUE TO THE INFINITE NUMBER OF FLOW PATHS FOR RUNOFF LEAVING THE LINEAR AREAS OF THE PROJECT. THEREFORE, THE TRUE "ON-SITE" DISTURBED AREA IS ONLY 0.86 ACRES AND DOES NOT REQUIRE WATER QUALITY MITIGATION.

HATCH LEGEND:

- EXISTING ASPHALT PAVEMENT
- EX. GRAVEL
- EXISTING CONCRETE
- DEMOLITION

EXISTING CONDITIONS & DEMOLITION NOTES:

1. THE SURVEY WAS PROVIDED BY EMC ENGINEERING SERVICES, IMC. AND DATED 03/04/2025. A COPY CAN BE PROVIDED UPON WRITTEN REQUEST.
2. THE CONTRACTOR SHALL REVIEW ALL DOCUMENTS AND OBTAIN FIRST HAND KNOWLEDGE OF THE PROJECT AREA. IF ANY DISCREPANCY ARE DISCOVERED NOTIFY THE ENGINEER IN WRITING WITHIN 24 HOURS.
3. THE CONTRACTOR SHALL PROVIDE 72 HOUR NOTICE THE THE UTILITIES PROTECTION CENTER PRIOR TO CONSTRUCTION COMMENCEMENT OR EXCAVATION. THE CONTRACTOR SHALL PROVIDE ADEQUATE PROTECTION FOR ALL EXISTING UTILITIES WITHIN THE CONSTRUCTION AREA AND REPAIR ANY UTILITIES DAMAGED DURING CONSTRUCTION AT NO COST TO THE OWNER/DEVELOPER.
4. THE CONTRACTOR SHALL COORDINATE ALL UTILITY DISCONNECTIONS / INTERRUPTIONS WITH THE UTILITY OWNER.
5. THE CONTRACTOR SHALL COORDINATE WITH UTILITY OWNERS ON ALL CONFLICTS.
6. THE CONTRACTOR SHALL PROVIDE APPROPRIATE SECURITY FEATURES (WARNING, DIVERSIONS, BARRIERS, ETC.) TO SECURE THE PROJECT AREA. THE CONTRACTOR SHALL PROVIDE / MAINTAIN THE ADEQUATE PEDESTRIAN ACCESS AROUND THE PROJECT AREA.
7. THE CONTRACTOR SHALL TAKE SPECIAL CARE TO PROTECT ALL TREES NOT SHOWN HEREON TO BE REMOVED AND PROVIDE ADEQUATE TREE PROTECTION AROUND THE CRITICAL ROOT ZONE FOR SUCH TREES.
8. ALL ITEMS INDICATED HEREON TO BE REMOVED / DEMOLISHED SHALL BECOME THE PROPERTY OF THE CONTRACTOR AND DISPOSED OF PROPERLY UNLESS OTHERWISE STATED WITHIN THE CONSTRUCTION CONTRACT.
9. ALL EXISTING ASPHALT / CONCRETE PAVEMENT & CURB SHALL BE PROTECTED FROM CONSTRUCTION ACTIVITIES. THE CONTRACTOR SHALL BE RESPONSIBLE FOR REPAIR / REPLACEMENT OF ANY DAMAGED AREAS.

GRAPHIC SCALE 1" = 20'

GEORGIA811 www.Georgia811.com

ESG ENGINEERING
6400 Peake Rd
Macon, GA 31210
Ph: (478) 474-4996
Fax: (478) 474-5045

GROUNDWATER WELLS #4 & #5

FOR THE
CITY OF FLOWERY BRANCH

REVISIONS	DESCRIPTION	DATE
1	ESPC SHEETS	11-7-25
2	BID SET OF PLANS	12-1-25
3	REVISED WITH CITY COMMENTS	12-5-25
4	ADDENDUM #1	12-8-25
5	ADDENDUM #2	12-11-25
6	ADDENDUM #3	12-12-25
7	REVISED WITH CITY COMMENTS	12-17-25

CONFORMED SET

GEORGIA REGISTERED No. PE046341 PROFESSIONAL ENGINEER ANDREW D SWICEGOOD

DRAWN BY: DSC
CHECKED BY: ADS
DATE: OCT 2025
SCALE: SEE SCALE

CONTENT:

CIVIL:
EXISTING CONDITIONS & DEMOLITION PLAN

SHEET NO: 2
C1.0

* DISTURBED AREA NOTES

1. THE TOTAL PROJECT SITE IS 2.14 ACRES.
2. THE TOTAL ON-SITE DISTURBED AREA IS 0.86 ACRES (WELL SITE PROJECT).
3. THE TOTAL OFF-SITE DISTURBED AREA IS 0.24 ACRES (WATER MAIN EXTENSION.
4. THE TOTAL PROJECT DISTURBED AREA (INCLUDING ON- AND OFF-SITE AREAS) IS 1.10 ACRES.
5. DUE TO THE PROPOSED ESC/BMP MEASURES AND THE TYPE OF CONSTRUCTION BEING LINEAR, SHALLOW TRENCHING WORK, THE 0.24 ACRES OF "OFF-SITE" AREA IS NOT BEING CONSIDERED AS PART OF THE ON-SITE HYDROLOGY ANALYSIS DUE TO THE INFINITE NUMBER OF FLOW PATHS FOR RUNOFF LEAVING THE LINEAR AREAS OF THE PROJECT. THEREFORE, THE TRUE "ON-SITE" DISTURBED AREA IS ONLY 0.86 ACRES AND DOES NOT REQUIRE WATER QUALITY MITIGATION.

STATE ROUTE 13
(100' RIGHT-OF-WAY)

RAILROAD AVENUE

10' LANDSCAPING BUFFER

SEE SHEET C2.2 FOR BUILDING DETAIL PLAN

CHEMICAL FEED BUILDING
FFE: 1122.20
AREA: 392 SF

±1,400 SY GRAVEL DRIVE
(SEE DETAIL ON SHEET C9.0)

PR. DIESEL GENERATOR

±620 LF 6' CHAIN LINK SECURITY FENCING W/ BARBED WIRE

HENDERSON WELL

EX. ABANDONED WELLHEAD & MARK LOCATION WITH STAKE

WATERSTONE WELL

PR. 24' DOUBLE-SWING GATE W/ BARBED WIRE

10' BUILDING SETBACK

75' IMPERVIOUS BUFFER

50' LOCAL STREAM BUFFER

25' STREAM BUFFER

30' BUILDING SETBACK

EX. STREAM CENTERLINE

EX. WETLANDS (APPROX.)

AREA
2.141 ACRES
PARCEL ID: 08098 001001, 08098 001002 08098 001003, 08098 001004
CITY OF FLOWERY BRANCH GEORGIA
DEED BOOK 9253, PAGE 463
PLAT BOOK 876, PAGE 1

*LIMITS OF DISTURBANCE
0.86 AC (ON-SITE)
0.24 AC (OFF-SITE)
±1.10 AC (TOTAL)

PERMANENT UTILITY EASEMENT

TEMPORARY CONSTRUCTION EASEMENT

*LIMITS OF DISTURBANCE
0.86 AC (ON-SITE)
0.24 AC (OFF-SITE)
±1.10 AC (TOTAL)

VIREO DR

EX. TOWNHOUSE

PARCEL ID: 08098A000206
WATER STONE CROSSING COMMUNITY ASSOC INC
DEED BOOK 4312, PAGE 80
PLAT BOOK 816, PAGE 154A

PARCEL ID: 08098 01009
KOSWIRE INC.
4600 CANTRELL ROAD
FLOWERY BRANCH, GA 30542
26.72 ACRES

PARCEL ID: 08098 A000206
WATER STONE CROSSING COMMUNITY ASSOCIATION
4611 BEACON RIDGE LANE
FLOWERY BRANCH, GA 30542
15.52 ACRES

GENERAL SITE NOTES:

1. CONTRACTOR SHALL CLEAR & GRUB ALL AREAS WITHIN THE EASEMENT. ALL REMOVED MATERIAL SHALL BE HAULED OFF SITE AND DISPOSED OF AT A LICENSED LANDFILL-NO BURNING SHALL BE ALLOWED.
2. EXISTING UTILITIES ARE APPROXIMATE AND ARE TO BE FIELD VERIFIED BY CONTRACTOR. CONTRACTOR SHALL INFORM ENGINEER OF ANY DISCREPANCIES IN INFORMATION PRIOR TO BEGINNING WORK.
3. HORIZONTAL DATA SHOWN HEREON IS BASED ON NAD83 GEORGIA STATE PLANES, WEST ZONE, US FOOT. VERTICAL DATA SHOWN HEREON IS BASED ON NAVD88.
4. CONTRACTOR SHALL PROTECT ALL EXISTING UTILITIES. CONTRACTOR SHALL REPAIR OR REPLACE, AT HIS OR HER OWN EXPENSE, ANY UTILITIES DAMAGED DURNING CONSTRUCTION.
5. CONTRACTOR SHALL COORDINATE WITH POWER & TELECOM COMPANIES FOR PROTECTION OF ANY EXISTING AND/OR RELOCATED OVERHEAD OR UNDERGROUND UTILITIES.

EROSION & SEDIMENT CONTROL NOTE:

1. CONTRACTOR SHALL PLACE TEMP. AND PERM. GRASSING ON ALL DISTURBED PERVIOUS AREAS. CONTRACTOR SHALL INSTALL SINGLE-ROW SILT FENCE ALONG THE DOWNSTREAM EDGE OF ALL DISTURBED PERVIOUS AREAS AND INSTALL DOUBLE-ROW SILT FENCE ADJACENT TO STREAM BUFFERS. CONTRACTOR SHALL INSTALL CHECK DAMS AT 2' VERTICAL INTERVALS WHERE PROPOSED CONSTRUCTION DISTURBS OR PARALLELS ROADSIDE DRAINAGE DITCHES.

HATCH LEGEND:

- ASPHALT PAVEMENT
- CONCRETE PAD AREAS
- GRAVEL SITE PAD / ACCESS DRIVE

GRAPHIC SCALE 1" = 20'

GEORGIA811 www.Georgia811.com

ESG ENGINEERING
6400 Peake Rd
Macon, GA 31210
Ph: (478) 474-4996
Fax: (478) 474-5045

GROUNDWATER WELLS #4 & #5

FOR THE
CITY OF FLOWERY BRANCH

REVISIONS	DESCRIPTION	DATE
1	ESPC SHEETS	11-7-25
2	BID SET OF PLANS	12-1-25
3	REVISED WITH CITY COMMENTS	12-5-25
4	ADDENDUM #1	12-8-25
5	ADDENDUM #2	12-11-25
6	ADDENDUM #3	12-12-25
7	REVISED WITH CITY COMMENTS	12-17-25

CONFORMED SET

GEORGIA REGISTERED No. PE046341 PROFESSIONAL ENGINEER ANDREW D SWICEGOOD

DRAWN BY: DSC
CHECKED BY: ADS
DATE: OCT 2025
SCALE: SEE SCALE

CONTENT:

CIVIL:
SITE PLAN

SHEET NO: 2 3 7

C2.0

CONSTRUCTION NOTES:

1. ALL EXTERIOR, EXPOSED ABOVE GROUND PIPING SHALL HAVE INSULATION PROVIDED, CONSISTING OF A POLYURETHANE FOAM CORE AND PVC JACKET TO MATCH CORRESPONDING PIPE SIZE. CONTRACTOR SHALL ENSURE SEAL BETWEEN JACKET/INSULATION AND PIPING.
2. PR. 3-WAY FIRE HYDRANT ASSEMBLY, CONSISTING OF 8"x6" RJ DI TEE, 6" RJ GATE VALVE W/ BOX & COVER, & 6" RJ DI LEAD PIPE.
3. ALL DUCTILE IRON PIPE & FITTINGS SHALL HAVE A CEMENT MORTAR/BITUMINOUS LINING IN ACCORDANCE WITH NSF-61 STANDARDS. ALL VALVES SHALL HAVE FUSION-BONDED EPOXY (FBE) LINING AS APPLICABLE, CONFORMING TO NSF-61.
4. REQUIREMENTS FOR COATING OF ABOVE-GROUND (EXPOSED) DUCTILE IRON PIPES, FITTINGS, AND VALVES:

PROP. SYSTEM TYPE:	EPOXY/EPOXY/POLYURETHANE
PROP. SURFACE PREPARATION:	PER MANUFACTURER'S RECOMMENDATION
PROP. PRIMER:	SERIES N140 POTA-POX PLUS - 4.0 TO 6.0 MILS DFT
PROP. INTERMEDIATE COAT:	SERIES N140 POTA-POX PLUS - 4.0 TO 6.0 MILS DFT
PROP. FINISH COAT:	SERIES 1094 ENDURA-SHIELD - 2.0 TO 5.0 MILS DFT
PROP. TOTAL DFT:	10.0 TO 17.0 MILS
PROP. FINISH COLOR:	[AS SELECTED BY ENGINEER] FROM MANUFACTURER'S STANDARD COLORS

5. REQUIREMENTS FOR COATING OF BELOW GRADE (BURIED) DUCTILE IRON PIPES, FITTINGS, AND VALVES SHALL BE AS OUTLINED IN SPECIFICATION SECTIONS 11200 & 02530.

SCALE: 1/2" = 1'-0"

EDGE OF GRAVEL DRIVE

ALL ELECTRICAL & HVAC LINES NOT SHOWN FOR CLARITY - SEE RESPECTIVE PLANS FOR DETAILED PLACEMENT OF HVAC SYSTEM COMPONENTS.

PR. 6" RJXFL DIP SPOOL PIECE
PR. 8"x6" RJ DI REDUCER
PR. 1.5" DOUBLE STRAP TAPPING SADDLE (INCL. UNDER WELL SITE IMPROVEMENTS LINE ITEM)
PR. PRECAST METER/BACKFLOW VAULT
PR. 1.5" PVC WATER LINE W/ ISOLATION VALVE, METER, AND BACKFLOW PREVENTER IN METER BOX TO BE SET IN STONE BEDDING
PR. 6" FL. 709DCDA DOUBLE CHECK DETECTOR ASSEMBLY BACKFLOW PREVENTER
PR. 6" FL DIP SPOOL PIECE
PR. 6" FL DI 90° BEND
TANKLESS WATER HEATER (SEE PLUMBING PLAN)
CHLORINE INJECTION (SEE DETAIL ON SHEET C9.1)
FLUORIDE INJECTION (SEE DETAIL ON SHEET C9.1)
PR. 6" FL GATE VALVE W/ HANDWHEEL
PR. 6"x4" FL DI WYE
PR. 6" FL DIP
PR. 6" RJxFL DIP SPOOL PIECE
PR. 4" FL. GATE VALVE W/ HANDWHEEL
PR. 4" FL DI 45° BEND
PR. 4" FL DIP
PR. 1.5" DOMESTIC WATER
PR. 4" FL DI SPOOL PIECE
PR. 59.5"x83.5" ALUMINUM ACCESS HATCH CAST INTO VAULT TOP (EJ H60841918 OR APPROVED EQUAL)
PR. FROST PROOF YARD HYDRANT W/ 3/4" HOSE CONNECTION
DEPRESSED CHEMICAL STORAGE BASIN
COVERED SHELTER ROOF EDGE/EAVE
CONC. WALKING AREA (4" THICK)
PR. FULL DEPTH ASPHALT SECTION PER DETAIL ON SHEET C9.4
PR. 3" PVC DRAIN LINE FROM BACKFLOW VAULT
DEPRESSED CHEMICAL STORAGE BASIN
PR. 4" CPVC UNDER DRAIN SPILL CONTAINMENT SYSTEM
CONTRACTOR SHALL RUN DRAIN LINE @ 1% MIN. SLOPE & DAYLIGHT INTO PR. SLOPE
SSMH-1 (VACUUM POINT - SEE COATING NOTES)
RIM: 1122.20
INV: 1114.20
PR. EYE WASH & SHOWER STATION U-LINE H-10735 (TYP. OF 2)
PR. WATER SPIGOT PRIER C-634 (TYP. OF 4 - SEE PLUMBING PLAN)
PR. MOP BASIN PROFLO PFMB2424 (TYP. OF 2)
PR. 4" PVC BUILDING SEWER LINE (SEE PLUMBING PLAN FOR DETAILED LAYOUT)
CO-2
RIM: 1122.10
INV: 1113.50
SSMH-2 (SEE COATING NOTES)
RIM: 1122.20
INV: 1116.20

PIPE GALLERY ROOM

4-EA GRUNDFOS CHEMICAL FEED PUMPS DDE 6-10 B-PV/T/C-X-31003BC (SEE SECTION 70001)

CHLORINE ROOM

SEE SECTION 70001 FOR CHEMICAL FEED SYSTEM PIPING & VALVES

PR. REMOVABLE RAMP (U-LINE H-4038)
PR. SPILL CONTAINMENT PALLET (U-LINE H-4036)

4-EA GRUNDFOS CHEMICAL FEED PUMPS DDE 6-10 B-PV/T/C-X-31003BC (SEE SECTION 70001)

PR. 4" CPVC UNDER DRAIN SPILL CONTAINMENT SYSTEM (SEE PLUMBING PLAN FOR DETAILED LAYOUT)

FLUORIDE ROOM

PR. REMOVABLE RAMP (U-LINE H-4038)
PR. SPILL CONTAINMENT FLOOR DRAIN (TYP. OF 5)
PR. SPILL CONTAINMENT PALLET (U-LINE H-4036)

CHEMICAL STORAGE BASIN & SPILL CONTAINMENT MANHOLE COATING SYSTEM:

- SURFACE PREP: CSP 4–6
- PRIMER: 100% SOLIDS EPOXY OR VE PRIMER, 6–10 MILS
- INTERMEDIATE COAT: NOVOLAC EPOXY OR VE, 15–20 MILS
- TOPCOAT: HIGH-BUILD NOVOLAC EPOXY OR VINYL ESTER, 80–125 MILS

6" CORDONEL ULTRASONIC FLOW METER
PR. 6" FL. GATE VALVE W/ HANDWHEEL
CORE WALL & INSTALL LS-200 LINK SEAL. PROVIDE GROUTING OF ANNULAR SPACE ON BOTH INTERIOR & EXTERIOR OF BUILDING (TYP. ALL WALL PENETRATIONS)
PR. 6" FL DI 90° BEND
4" CORDONEL ULTRASONIC FLOW METER
PR. 4" FL. GATE VALVE W/ HANDWHEEL
PR. 4" FL. DI 90° BEND
PR. 6" RJ DIP
PR. 4" RJ DI 22.5° BEND
PR. 4" RJ DIP
TO WATERSTONE WELL (SEE INSET "A" THIS SHEET)

WELL HOUSE PREFABRICATED ENCLOSURE BY CLAY-GREENE (TYP. OF 2)
PR. 4" FL. CHECK VALVE
PR. 4"x6" FL. DI REDUCER
PR. 6" FL. DI LONG RADIUS 90° BEND
PR. 6"x4" RJ DI TEE
PR. 4" FL DI LONG RADIUS 90° BEND
SEE WELL SECTIONS ON DETAIL SHEET C9.3
HENDERSON WELL - SEE SECTION 80001 FOR WELL REHABILITATION
PR. 6" RJ GATE VALVE W/ RISER BOX & COVER
PR. 4" RJ DIP
SEE DETAIL ON SHEET C9.4 FOR BLOW-OFF PIPING
PR. INSULATED FIBERGLASS ENCLOSURE, APPROX. DIMENSIONS 36x24x36 (HUBBELL HOT BOX OR APPROVED EQUAL)
4" CRUSHER RUN PLACED BENEATH ENCLOSURE
PLACE 8'x6' CONC. PAD FOR WELL HOUSE (SEE DETAIL ON SHEET C9.4)

INSET "A"
SCALE: 1/2" = 1'-0"

25' STREAM BUFFER
EDGE OF GRAVEL DRIVE
WELL HOUSE PREFABRICATED ENCLOSURE BY CLAY-GREENE (TYP. OF 2)
PLACE 8'x6' CONC. PAD FOR WELL HOUSE (SEE DETAIL ON SHEET C9.4)
PR. 4" FL. CHECK VALVE
PR. 2-EA 4" FL. DI LONG RADIUS 90° BEND, 4" FLxRJ DI SPOOL PIECE, & 4" RJ DI 90° BEND
TO CHEMICAL FEED BUILDING (THIS SHEET)
PR. 4" RJ DIP
PR. 4" RJ GATE VALVE W/ RISER BOX & COVER
PR. 4" RJ DI TEE
SEE WELL SECTIONS ON DETAIL SHEET C9.3
SEE DETAIL ON SHEET C9.4 FOR BLOW-OFF PIPING
PR. 4" RJ DIP
WATERSTONE WELL - SEE SECTION 80001 FOR WELL REHABILITATION
4" CRUSHER RUN PLACED BENEATH ENCLOSURE
PR. INSULATED FIBERGLASS ENCLOSURE, APPROX. DIMENSIONS 36x24x36 (HUBBELL HOT BOX OR APPROVED EQUAL)

ESG ENGINEERING
6400 Peake Rd
Macon, GA 31210
Ph: (478) 474-4996
Fax: (478) 474-5045

GROUNDWATER WELLS #4 & #5

FOR THE
CITY OF FLOWERY BRANCH

NO.	DESCRIPTION	DATE
1	ESPC SHEETS	11-7-25
2	BID SET OF PLANS	12-1-25
3	REVISED WITH CITY COMMENTS	12-5-25
4	ADDENDUM #1	12-8-25
5	ADDENDUM #2	12-11-25
6	ADDENDUM #3	12-12-25
7	REVISED WITH CITY COMMENTS	12-17-25

CONFORMED SET

GEORGIA REGISTERED No. PE046341 PROFESSIONAL ENGINEER ANDREW D SWICEGOOD

DRAWN BY: DSC
CHECKED BY: ADS
DATE: OCT 2025
SCALE: SEE SCALE

CONTENT:

CIVIL:
BUILDING PIPING PLAN

SHEET NO: 2 3 7
C2.1

GEORGIA811 www.Georgia811.com

CONSTRUCTION NOTES:

1. INTERIOR WALL COATING FOR THE CHEMICAL FEED BUILDING SHALL BE AS FOLLOWS:
   - BASE: EPOXY PRIMER (8-12 MILS DFT)
   - TOP: CHEMICAL-RESISTANT EPOXY OR NOVOLAC EPOXY (6-10 MILS)
2. INTERIOR & EXTERIOR FLOOR COATING FOR THE CHEMICAL FEED BUILDING SHALL BE AS FOLLOWS:
   - BASE: EPOXY FLOOR PRIMER (3-5 MILS DFT)
   - INTERMEDIATE: HIGH-BUILD EPOXY COAT (10-20 MILS DFT)
   - TOP: UV-STABLE ALIPHATIC POLYURETHANE (2-4 MILS DFT)
3. LINING FOR CHEMICAL STORAGE BASIN SHALL BE AS FOLLOWS:
   - SURFACE PREP: CSP 4–6
   - PRIMER: 100% SOLIDS EPOXY OR VE PRIMER, 6–10 MILS
   - INTERMEDIATE COAT: NOVOLAC EPOXY OR VE, 15–20 MILS
   - TOPCOAT: HIGH-BUILD NOVOLAC EPOXY OR VINYL ESTER, 80–125 MILS
4. COATING SYSTEM SHALL BE BY TNEMEC, PPG, SHERWIN-WILLIAMS, OR APPROVED EQUAL.
5. CONTRACTOR SHALL SUBMIT A SCHEDULE OF THE PROPOSED WALL & FLOOR COATING SYSTEM PRIOR TO ORDERING MATERIALS FOR REVIEW AND APPROVAL BY THE ENGINEER.

CONTRACTOR SHALL RUN/STUB-OUT 2.5" PVC CONDUIT TO METERING POINT AT BLDG. (SEE UTILITY PLAN FOR CONTINUATION)

EDGE OF GRAVEL DRIVE

SCALE: 1/2" = 1'-0"

ALL ELECTRICAL & HVAC EQUIPMENT NOT SHOWN FOR CLARITY - SEE RESPECTIVE PLANS FOR DETAILED PLACEMENT OF HVAC SYSTEM COMPONENTS.

PR. HVAC CONDENSER PAD (TYP. OF 3; SEE DETAIL ON SHEET C9.4)

PR. BOLLARD (TYP. OF 4)

PR. WALL PACK LIGHTS (TYP. OF 3)

PREFABRICATED CHEMICAL FEED BUILDING (SEE BUILDING PLANS)

PIPE GALLERY ROOM

SEE ELECTRICAL SHEETS FOR EXACT PLACEMENT & LAYOUT OF EQUIPMENT

SEE ELECTRICAL SHEETS FOR EXACT PLACEMENT & LAYOUT OF ELECTRICAL & CONTROLS EQUIPMENT.

PR. FIBERGLASS ENCLOSURE, APPROX. DIMENSIONS 36x24x36 (HUBBELL HOT BOX OR APPROVED EQUAL)

SEE ELECTRICAL SHEETS FOR CONDUIT/WIRING RUNS

DEPRESSED CHEMICAL STORAGE BASIN (SEE NOTE #3)

PR. EYE WASH & SHOWER STATION U-LINE H-10735 (TYP. OF 2 - SEE PLUMBING PLANS)

CHLORINE ROOM

PR. MOP BASIN PROFLO PFMB2424 (TYP. OF 2 - SEE PLUMBING PLANS)

BUILDING FFE: 1122.20

PR. REMOVABLE RAMP (U-LINE H-4038)

PR. SPILL CONTAINMENT PALLET (U-LINE H-4036)

COVERED SHELTER ROOF EDGE/EAVE

4" CONC. WALKING AREA (SEE NOTE #2)

PR. FULL DEPTH ASPHALT SECTION PER DETAIL ON SHEET C9.4

METAL DOOR (TYP. OF 3)

FLUORIDE ROOM

PR. WATER SPIGOT PRIER C-634 (TYP. OF 4 - SEE PLUMBING PLAN)

PR. REMOVABLE RAMP (U-LINE H-4038)

PR. SPILL CONTAINMENT FLOOR DRAIN (TYP. OF 5 - SEE PLUMBING PLAN)

PR. SPILL CONTAINMENT PALLET (U-LINE H-4036)

DEPRESSED CHEMICAL STORAGE BASIN (SEE NOTE #3)

POLE BARN CHEMICAL STORAGE COVER

PR. CONC. FOOTER (TYP. OF 4) (SEE DETAIL ON SHEET C9.4)

PR. 4" DOWNSPOUT AND 1'x1.5' SPLASH PAD (TYP. OF 3)

PLACE 8'x6' CONC. PAD FOR WELL HOUSE (SEE DETAIL ON SHEET C9.4)

4" CRUSHER RUN PLACED BENEATH ENCLOSURE

HENDERSON WELL

PR. HENDERSON WELL MAIN PANEL (SEE ELECTRICAL SHEETS)

TO WATERSTONE WELL (SEE INSET "A" THIS SHEET)

INSET "A"
SCALE: 1/2" = 1'-0"

25' STREAM BUFFER

PR. CHAIN LINK FENCE

EDGE OF GRAVEL DRIVE

PLACE 8'x6' CONC. PAD FOR WELL HOUSE (SEE DETAIL ON SHEET C9.4)

PR. FIBERGLASS ENCLOSURE, APPROX. DIMENSIONS 36x24x36 (HUBBELL HOT BOX OR APPROVED EQUAL)

WATERSTONE WELL

4" CRUSHER RUN PLACED BENEATH ENCLOSURE

PR. WATERSTONE WELL MAIN PANEL (SEE ELECTRICAL SHEETS)

PR. 3-PHASE POWER (SEE ELECTRICAL FOR CONTINUATION)

TO CHEMICAL FEED BUILDING (THIS SHEET)

ESG ENGINEERING
6400 Peake Rd
Macon, GA 31210
Ph: (478) 474-4996
Fax: (478) 474-5045

GROUNDWATER WELLS #4 & #5

FOR THE
CITY OF FLOWERY BRANCH

REVISIONS

NO	DESCRIPTION	DATE
1	ESPC SHEETS	11-7-25
2	BID SET OF PLANS	12-1-25
3	REVISED WITH CITY COMMENTS	12-5-25
4	ADDENDUM #1	12-8-25
5	ADDENDUM #2	12-11-25
6	ADDENDUM #3	12-12-25
7	REVISED WITH CITY COMMENTS	12-17-25

CONFORMED SET

GEORGIA REGISTERED No. PE046341 PROFESSIONAL ENGINEER ANDREW D SWICEGOOD

DRAWN BY: DSC
CHECKED BY: ADS
DATE: OCT 2025
SCALE: SEE SCALE

CONTENT:

CIVIL:
BUILDING DETAIL PLAN

SHEET NO: 37
C2.2

GEORGIA811 www.Georgia811.com

* DISTURBED AREA NOTES

1. THE TOTAL PROJECT SITE IS 2.14 ACRES.
2. THE TOTAL ON-SITE DISTURBED AREA IS 0.86 ACRES (WELL SITE PROJECT).
3. THE TOTAL OFF-SITE DISTURBED AREA IS 0.24 ACRES (WATER MAIN EXTENSION.
4. THE TOTAL PROJECT DISTURBED AREA (INCLUDING ON- AND OFF-SITE AREAS) IS 1.10 ACRES.
5. DUE TO THE PROPOSED ESC/BMP MEASURES AND THE TYPE OF CONSTRUCTION BEING LINEAR, SHALLOW TRENCHING WORK, THE 0.24 ACRES OF "OFF-SITE" AREA IS NOT BEING CONSIDERED AS PART OF THE ON-SITE HYDROLOGY ANALYSIS DUE TO THE INFINITE NUMBER OF FLOW PATHS FOR RUNOFF LEAVING THE LINEAR AREAS OF THE PROJECT. THEREFORE, THE TRUE "ON-SITE" DISTURBED AREA IS ONLY 0.86 ACRES AND DOES NOT REQUIRE WATER QUALITY MITIGATION.

STATE ROUTE 13
(100' RIGHT-OF-WAY)

RAILROAD AVENUE

10' LANDSCAPING BUFFER

PR. 4" WATER

BUILDING SQFT: 392
FFE: 1122.20

EX. ABANDONED WELL

PR. 8" WATER

PR. 4" SAN. SEWER

10' BUILDING SETBACK

75' IMPERVIOUS BUFFER

50' LOCAL STREAM BUFFER

25' STREAM BUFFER

30' BUILDING SETBACK

EX. 20' SEWER EASEMENT

EX. WETLANDS
(APPROX.)

EX. STREAM
CENTERLINE

VIREO DR

AREA
2.141 ACRES
PARCEL ID: 08098 001001, 08098 001002
08098 001003, 08098 001004
CITY OF FLOWERY BRANCH GEORGIA
DEED BOOK 9253, PAGE 463
PLAT BOOK 876, PAGE 1

*LIMITS OF DISTURBANCE
0.86 AC (ON-SITE)
0.24 AC (OFF-SITE)
±1.10 AC (TOTAL)

PR. 8" WATER
(DIRECTIONAL DRILL)

PERMANENT UTILITY EASEMENT

*LIMITS OF DISTURBANCE
0.86 AC (ON-SITE)
0.24 AC (OFF-SITE)
±1.10 AC (TOTAL)

PARCEL ID: 08098 01009
KOSWIRE INC.
4600 CANTRELL ROAD
FLOWERY BRANCH, GA 30542
26.72 ACRES

PARCEL ID: 08098 A000206
WATER STONE CROSSING
COMMUNITY ASSOCIATION
4611 BEACON RIDGE LANE
FLOWERY BRANCH, GA 30542
15.52 ACRES

TEMPORARY CONSTRUCTION
EASEMENT

PARCEL ID: 08098A000206
WATER STONE CROSSING COMMUNITY ASSOC INC
DEED BOOK 4312, PAGE 80
PLAT BOOK 816, PAGE 154A

GRAPHIC SCALE 1" = 20'

GEORGIA811
www.Georgia811.com

PAVING, GRADING, & DRAINAGE NOTES:

1. THE CONTRACTOR SHALL BE RESPONSIBLE FOR FURNISHING ALL FILL MATERIAL. FILL MATERIAL SHALL BE CLEAN AND FREE OF ALL DEBRIS AND ORGANIC MATERIAL. SUITABLE FILL MATERIAL SHALL BE PLACED IN LIFTS OF 8" OR LESS AND COMPACTED TO 95% STANDARD PROCTOR.
2. A GEOTECHNICAL REPORT HAS BEEN PREPARED BY TERRACON AND HAS BEEN INCLUDED IN THE CONTRACT DOCUMENTS AS APPENDIX A.
3. THE CONTRACTOR SHALL GRADE THE SITE TO PROVIDE POSITIVE DRAINAGE AS INDICATED BY THE PROPOSED ELEVATIONS, CONTOURS, AND DRAINAGE SLOPE ARROWS.
4. CONTRACTOR SHALL ADJUST ALL EXISTING AND PROPOSED STRUCTURES (MANHOLES, VALVE BOXES, ETC.) TO FINISHED GRADE ELEVATIONS.
5. FINAL GRADES SHALL BE FLUSH WITH BACK OF CURB, EDGE OF PAVEMENT, AND / OR SIDEWALK GRADES.
6. SEE DETAILS FOR TYPICAL PAVEMENT SECTIONS
7. THE PRIMARY PERMITTEE WILL RETAIN ESG ENGINEERING (THE DESIGN PROFESSIONAL) DURING THE INTERMEDIATE GRADING AND DRAINAGE BMP PHASE, AS WELL AS, THE FINAL BMP PHASE.

EROSION & SEDIMENT CONTROL NOTE:

1. CONTRACTOR SHALL PLACE TEMP. AND PERM. GRASSING ON ALL DISTURBED PERVIOUS AREAS. CONTRACTOR SHALL INSTALL SINGLE-ROW SILT FENCE ALONG THE DOWNSTREAM EDGE OF ALL DISTURBED PERVIOUS AREAS AND INSTALL DOUBLE-ROW SILT FENCE ADJACENT TO STREAM BUFFERS. CONTRACTOR SHALL INSTALL CHECK DAMS AT 2' VERTICAL INTERVALS WHERE PROPOSED CONSTRUCTION DISTURBS OR PARALLELS ROADSIDE DRAINAGE DITCHES.

ESG ENGINEERING
6400 Peake Rd
Macon, GA 31210
Ph: (478) 474-4996
Fax: (478) 474-5045

GROUNDWATER WELLS #4 & #5

FOR THE
CITY OF FLOWERY BRANCH

REVISIONS	DESCRIPTION	DATE
1	EDPC SHEETS	11-7-25
2	BID SET OF PLANS	12-1-25
3	REVISED WITH CITY COMMENTS	12-5-25
4	ADDENDUM #1	12-8-25
5	ADDENDUM #2	12-11-25
6	ADDENDUM #3	12-12-25
7	REVISED WITH CITY COMMENTS	12-17-25

CONFORMED SET

GEORGIA REGISTERED PROFESSIONAL ENGINEER
No. PE046341
ANDREW D SWICEGOOD

DRAWN BY: DSC
CHECKED BY: ADS
DATE: OCT 2025
SCALE: SEE SCALE

CONTENT:
CIVIL:
GRADING & DRAINAGE PLAN

SHEET NO: 2 3 7
C3.0

* DISTURBED AREA NOTES

1. THE TOTAL PROJECT SITE IS 2.14 ACRES.
2. THE TOTAL ON-SITE DISTURBED AREA IS 0.86 ACRES (WELL SITE PROJECT).
3. THE TOTAL OFF-SITE DISTURBED AREA IS 0.24 ACRES (WATER MAIN EXTENSION.
4. THE TOTAL PROJECT DISTURBED AREA (INCLUDING ON- AND OFF-SITE AREAS) IS 1.10 ACRES.
5. DUE TO THE PROPOSED ESC/BMP MEASURES AND THE TYPE OF CONSTRUCTION BEING LINEAR, SHALLOW TRENCHING WORK, THE 0.24 ACRES OF "OFF-SITE" AREA IS NOT BEING CONSIDERED AS PART OF THE ON-SITE HYDROLOGY ANALYSIS DUE TO THE INFINITE NUMBER OF FLOW PATHS FOR RUNOFF LEAVING THE LINEAR AREAS OF THE PROJECT. THEREFORE, THE TRUE "ON-SITE" DISTURBED AREA IS ONLY 0.86 ACRES AND DOES NOT REQUIRE WATER QUALITY MITIGATION.

PR. DIG PIT

EX. 6" PVC WATER LINE (OWNED BY CITY OF GAINESVILLE)

CUT, CAP, & ABANDON EX. 2" WATER LINE IN PLACE
GDOT APPROVAL
#U-139-012970-1

STATE ROUTE 13
(100' RIGHT-OF-WAY)

EX. 2" PVC WATER LINE (OWNED BY CITY OF FLOWERY BRANCH)

PR. LAUNCHING PIT

CONNECT TO EX. LINE W/ 2" TAPPING SLEEVE, 2"x4" RJ DI REDUCER, 4" RJ DI BENDS, & 4" GATE VALVE W/ BOX & COVER (5)

4" RJ DIP WATER MAIN INSTALLED VIA HORIZONTAL DIRECTIONAL DRILL
GDOT APPROVAL
#U-139-012970-1

STATE ROUTE 13
(100' RIGHT-OF-WAY)

EX. 6" HIGH PRESSURE STL. GAS MAIN

8" RJ DI 90° BEND

OPEN CUT PAVEMENT (SEE PAVEMENT PATCH DETAIL ON SHEET 9.0)

POTHOLE AND VERIFY IF EX. WATER LINE IS ACTIVE

MATCHLINE - SEE SHEET 4.1

RAILROAD AVENUE

EX. 10" RECLAIM WATER

4" RJ DI 45° BEND

PR. RECEIVING PIT

EX. 10" RECLAIM WATER

PR. FIRE HYDRANT ASSEMBLY (INCL. 8"x6" RJ DI TEE, 6" RJ GATE VALVE, & 6" RJ DI LEAD PIPE)

EX. FIBER OPTIC LINE

EX. 1.25" GAS LINE

10' LANDSCAPING BUFFER

CONTRACTOR SHALL RUN/STUB-OUT 2.5" PVC CONDUIT FROM EX. POWER POLE TO PR. METERING POINT AT BLDG. (5)

10' LANDSCAPING BUFFER

EX. 2" WATER

PR. DIG PIT

8" RJ DI 45° BEND

PR. 4" DIP

COORDINATE WITH GA POWER FOR RELOCATION OF EX. GUY WIRES

HENDERSON WELL

PR. DIESEL GENERATOR ON CONC. SLAB PER DETAIL ON SHEET C9.4

PR. 8" RJ DI TEE W/ 8"x4" RJ DI REDUCER

PR. 8" RJ GATE VALVE W/ BOX & COVER

POTHOLE AND VERIFY IF EX. WATER LINE IS ACTIVE

SEE BUILDING PIPING PLAN FOR CONTINUATION

PR. 4" WATER

EX. ABANDONED WELL

WATERSTONE WELL

CO-1
RIM:1121.37
INV:1110.50

PR. 8" DIP

72.33' of 4" @ 4.15%

CO-2
RIM:1122.01
INV:1113.50

UNDG. POWER TO WELLS (TYP.)

8" RJ DI 45° BEND

PR. 8" WATER

61.88' of 4" @ 4.31%

PR. 8" RJ DI TEE

Ø48" ISOLATED MANHOLE FOR CHEMICAL SPILL CONTAINMENT - ANY SPILLS TO BE REMOVED BY VACUUM TRUCK. THIS MH IS NOT CONNECTED TO THE SANITARY SEWER SYSTEM.

PR. 8" WATER

8" RJ DI 45° BEND

EX. IRRIGATION WATER LINE

EX. STONE FENCE POST (TYP.)

PR. RECEIVING PIT

10' BUILDING SETBACK

VIREO DR

AREA
2.141 ACRES
PARCEL ID: 08098 001001, 08098 001002
08098 001003, 08098 001004
CITY OF FLOWERY BRANCH GEORGIA
DEED BOOK 9253, PAGE 463
PLAT BOOK 876, PAGE 1

*LIMITS OF DISTURBANCE
0.86 AC (ON-SITE)
0.24 AC (OFF-SITE)
±1.10 AC (TOTAL)

75' IMPERVIOUS BUFFER

50' STREAM BUFFER

25' STREAM BUFFER

EXISTING SS MH
RIM:1113.61
INV IN: 1106.75 4"
INV IN: 1104.00 12"
INV OUT: 1103.93 12"

EX. 20' SEWER EASEMENT

EX. WETLANDS (APPROX.)

68°

96" CMP IE:1107.85

96" CMP IE:1107.73

96" CMP IE:1108.39

96" CMP IE:1108.52

EX. 12" SAN. SEWER

EX. WETLANDS (APPROX.)

EX. STREAM CENTERLINE

30' BUILDING SETBACK

PR. HORIZONTAL DIRECTIONAL DRILL ±130 LF 8" HDPE DR-11 (DIPS) WATER MAIN. PROVIDE RESTRAINED HDPExMJ TRANSITION COUPLINGS ON EITHER END TO CONTINUE PIPE MATERIAL AS DUCTILE. (2)

(2) PERMANENT UTILITY EASEMENT

EX. UNDG. POWER

EX. FIBER OPTIC LINE

PARCEL ID: 08098 01009
KOSWIRE INC.
4600 CANTRELL ROAD
FLOWERY BRANCH, GA 30542
26.72 ACRES

8" RJ DI 90° BEND

PR. LAUNCHING PIT. CONTRACTOR SHALL REMOVE EX. TREES, SHRUBS, & VEGETATION AND PROVIDE REPLACEMENT OF ALL LANDSCAPING TO MATCH EXISTING.

PR. CONNECTION TO EX. WATER MAIN W/ 8"x6" RJ DI REDUCER, RJ DI BENDS, AND 6" TAPPING SLEEVE & VALVE

PARCEL ID: 08098A000206
WATER STONE CROSSING COMMUNITY ASSOC INC
DEED BOOK 4310, PAGE 80
PLAT BOOK 816, PAGE 154A

EX. FIRE HYDRANT

*LIMITS OF DISTURBANCE
0.86 AC (ON-SITE)
0.24 AC (OFF-SITE)
±1.10 AC (TOTAL)

TEMPORARY CONSTRUCTION EASEMENT (2)

EX. 6" WATER LINE

PARCEL ID: 08098 A000206
WATER STONE CROSSING COMMUNITY ASSOCIATION
4611 BEACON RIDGE LANE
FLOWERY BRANCH, GA 30542
15.52 ACRES

KEYED NOTE:

(1) PIPE INSTALLED BEYOND BACKFLOW VAULT TO BE PAID FOR VIA LINEAR FOOT LINE ITEMS - NOT TO BE INCLUDED UNDER LUMP SUM WELL SITE IMPROVEMENTS ITEM.

(2) NO WORK LOCATED ON PRIVATE PROPERTY WILL BE ALLOWED UNTIL EASEMENTS ARE OBTAINED. ALL WORK LOCATED OFF-SITE SHALL BE COORDINATED WITH THE RESPECTIVE PROPERTY OWNER TO MINIMIZE ANY DISRUPTIONS.

UTILITY NOTES:

1. THE CONTRACTOR SHALL PROVIDE 72 HOUR NOTICE TO THE UTILITIES PROTECTION CENTER PRIOR TO CONSTRUCTION COMMENCEMENT OR EXCAVATION. THE CONTRACTOR SHALL PROVIDE ADEQUATE PROTECTION FOR ALL EXISTING UTILITIES WITHIN THE CONSTRUCTION AREA AND REPAIR ANY UTILITIES DAMAGED DURING CONSTRUCTION AT NO COST TO THE OWNER.
2. THE CONTRACTOR SHALL FIELD VERIFY LOCATION AND SIZE OF ALL EXISTING UTILITIES WITHIN THE PROJECT AREA. THE CONTRACTOR SHALL COORDINATE WITH UTILITY OWNERS ON ALL CONFLICTS.
3. THE CONTRACTOR SHALL VERIFY ALL DIMENSIONS AND LOCATIONS OF PROPOSED UTILITIES AND COORDINATE WITH ALL APPLICABLE PLANS FOR THE PROJECT. THE CONTRACTOR SHALL BE RESPONSIBLE FOR PROPER PLACEMENT AND FIT OF ALL PROPOSED UTILITIES. IF ANY DISCREPANCIES ARE DISCOVERED, NOTIFY THE ENGINEER IN WRITING WITHIN 24 HOURS.
4. TEN (10') FOOT HORIZONTAL & EIGHTEEN (18") INCH VERTICAL SEPARATION SHALL BE MAINTAINED BETWEEN ALL PROPOSED POTABLE WATER MAINS AND SANITARY SEWER MAINS.
5. FOUR (4') FOOT MINIMUM COVER SHALL BE MAINTAINED ABOVE ALL PROPOSED WATER MAINS AND SERVICE CONNECTIONS.
6. ALL SANITARY SEWER CONSTRUCTION SHALL COMPLY WITH ALL LOCAL STANDARDS AND SPECIFICATIONS.
7. THE CONTRACTOR SHALL ADJUST THE TOPS OF ALL EXISTING AND PROPOSED UTILITY STRUCTURES TO MATCH FINAL GRADE ELEVATIONS.
8. SEE MEP DESIGN SHEETS FOR EXACT PLACEMENT OF SPECIFIED UTILITIES.
9. ALL PROPOSED WATER MAIN PIPE & FITTINGS SHALL HAVE RESTRAINED JOINTS AND HAVE CONC. THRUST BLOCKING INSTALLED.

GRAPHIC SCALE 1" = 20'

GEORGIA811 www.Georgia811.com

ESG ENGINEERING
6400 Peake Rd
Macon, GA 31210
Ph: (478) 474-4996
Fax: (478) 474-5045

GROUNDWATER WELLS #4 & #5

FOR THE
CITY OF FLOWERY BRANCH

REVISIONS NO.	DESCRIPTION	DATE
1	ESPC SHEETS	11-7-25
2	BID SET OF PLANS	12-1-25
3	REVISED WITH CITY COMMENTS	12-5-25
4	ADDENDUM #1	12-8-25
5	ADDENDUM #2	12-11-25
6	ADDENDUM #3	12-12-25
7	REVISED WITH CITY COMMENTS	12-17-25

CONFORMED SET

GEORGIA REGISTERED No. PE046341 PROFESSIONAL ENGINEER ANDREW D SWICEGOOD

DRAWN BY: DSC
CHECKED BY: ADS
DATE: OCT 2025
SCALE: SEE SCALE

CONTENT:

CIVIL:
UTILITY PLAN

SHEET NO: 2 3 5 6 7

C4.0

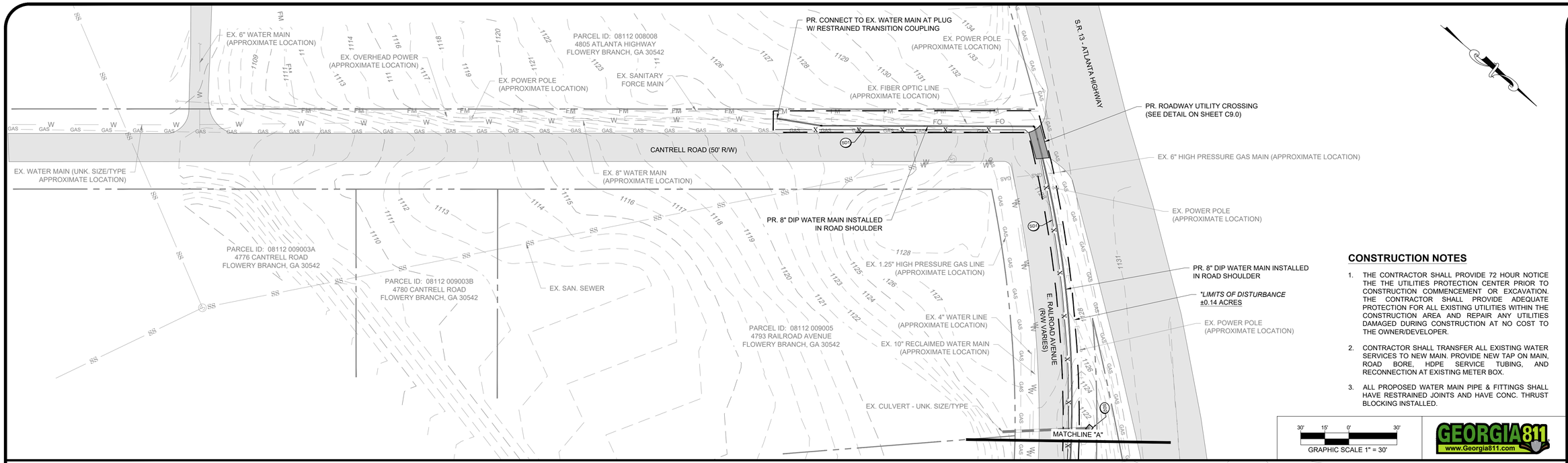

CONSTRUCTION NOTES

1. THE CONTRACTOR SHALL PROVIDE 72 HOUR NOTICE THE THE UTILITIES PROTECTION CENTER PRIOR TO CONSTRUCTION COMMENCEMENT OR EXCAVATION. THE CONTRACTOR SHALL PROVIDE ADEQUATE PROTECTION FOR ALL EXISTING UTILITIES WITHIN THE CONSTRUCTION AREA AND REPAIR ANY UTILITIES DAMAGED DURING CONSTRUCTION AT NO COST TO THE OWNER/DEVELOPER.
2. CONTRACTOR SHALL TRANSFER ALL EXISTING WATER SERVICES TO NEW MAIN. PROVIDE NEW TAP ON MAIN, ROAD BORE, HDPE SERVICE TUBING, AND RECONNECTION AT EXISTING METER BOX.
3. ALL PROPOSED WATER MAIN PIPE & FITTINGS SHALL HAVE RESTRAINED JOINTS AND HAVE CONC. THRUST BLOCKING INSTALLED.

GEORGIA811 www.Georgia811.com

*DISTURBED AREA CALCULATIONS:

PROJECT SITE: 2.14 AC
TOTAL DISTURBED AREA: 1.06 AC

DISTURBED AREA (OFF SITE): 0.14 AC
DISTURBED AREA (ON SITE): 0.92 AC
DISTURBED AREA = 0.92 AC / 2.14 AC = 43% OF PROJECT SITE
< 50% GOOD

IMPERVIOUS AREA = 1400 SF -> 0.032 AC / 1.06 AC = 3.0%

<50% GOOD
<15% GOOD

ESG ENGINEERING
6400 Peake Rd
Macon, GA 31210
Ph: (478) 474-4996
Fax: (478) 474-5045

GROUNDWATER WELLS #4 & #5

FOR THE
CITY OF FLOWERY BRANCH

REVISIONS

NO.	DESCRIPTION	DATE
1	ESPC SHEETS	11-7-25
2	BID SET OF PLANS	12-1-25
3	REVISED WITH CITY COMMENTS	12-5-25

CONFORMED SET

GEORGIA REGISTERED No. PE046341 PROFESSIONAL ENGINEER ANDREW D SWICEGOOD

DRAWN BY: DSC
CHECKED BY: ADS
DATE: OCT 2025
SCALE: SEE SCALE

CONTENT:

CIVIL:
WATER MAIN EXT.

SHEET NO: C4.1

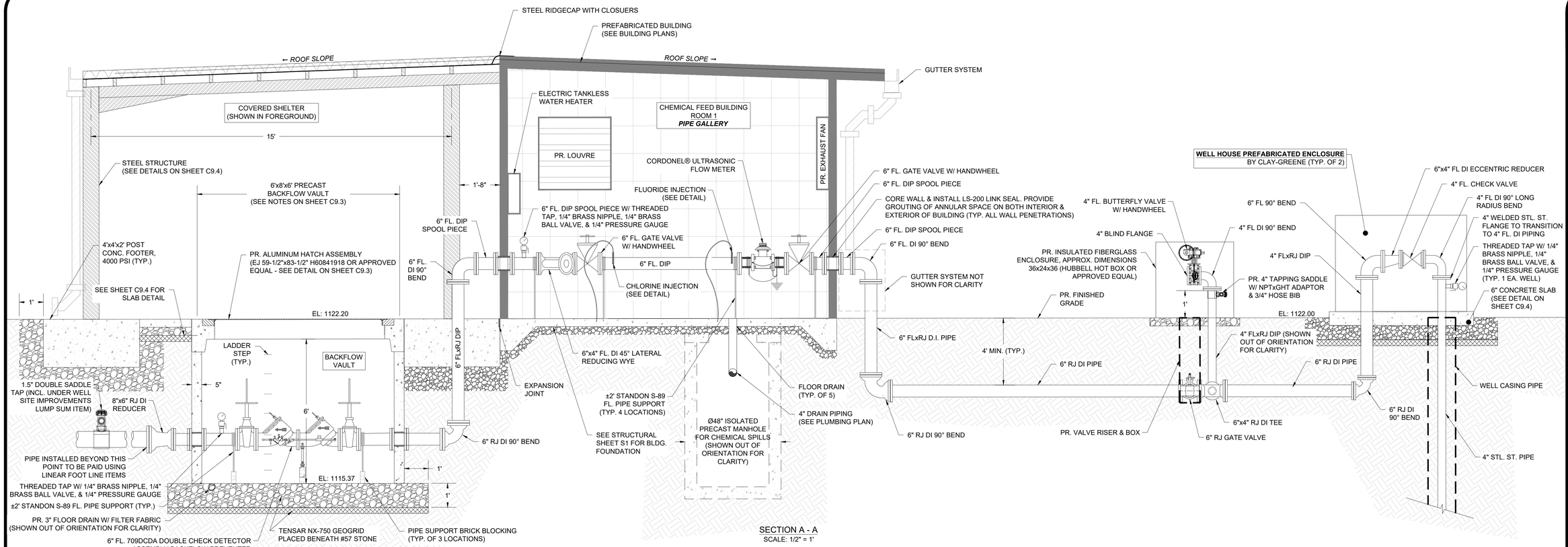

SECTION A - A
SCALE: 1/2" = 1'

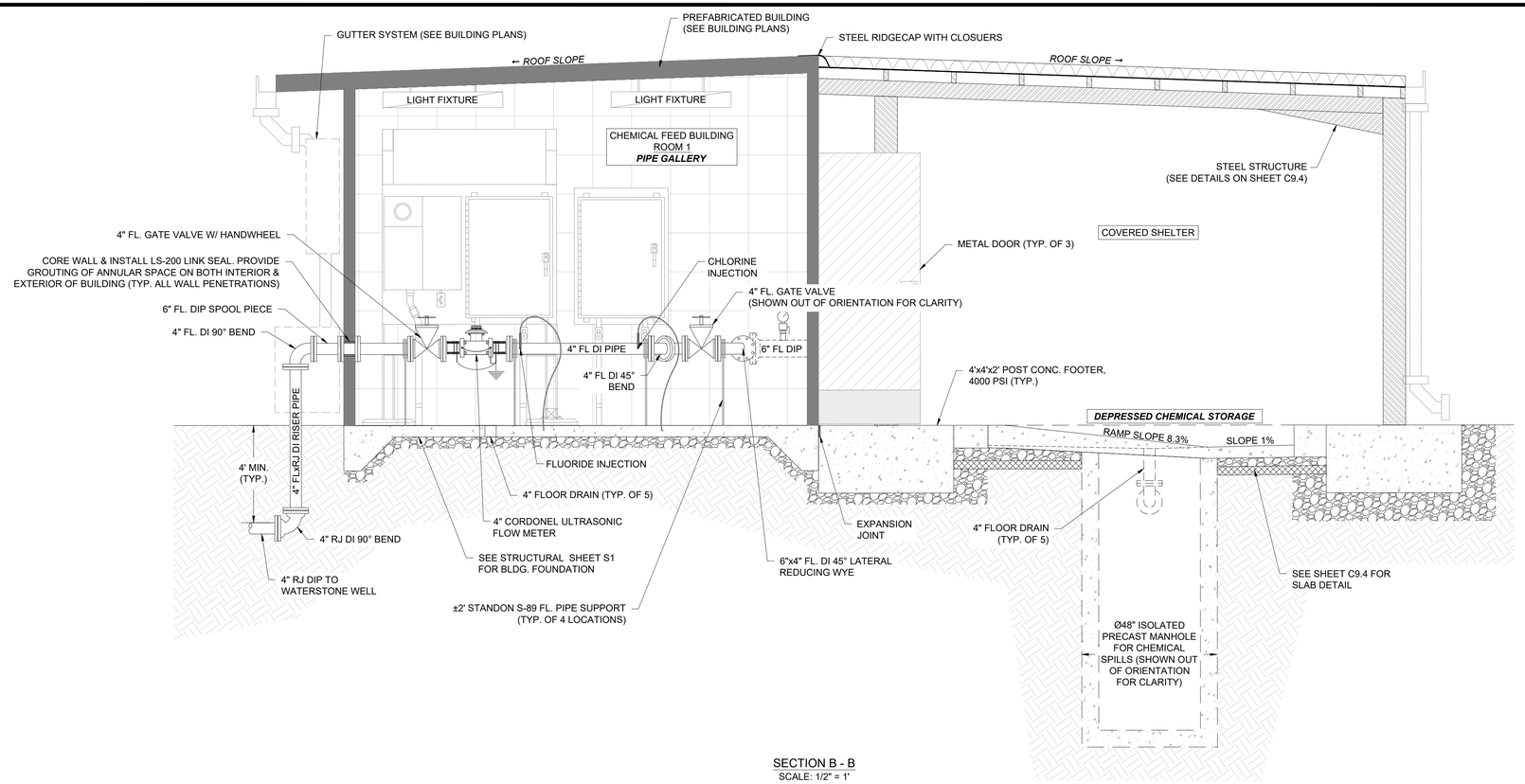

SECTION B - B
SCALE: 1/2" = 1'

ESG ENGINEERING
6400 Peake Rd
Macon, GA 31210
Ph: (478) 474-4996
Fax: (478) 474-5045

GROUNDWATER WELLS #4 & #5

FOR THE
CITY OF FLOWERY BRANCH

REVISIONS

NO.	DESCRIPTION	DATE
1	ESPC SHEETS	11-7-25
2	BID SET OF PLANS	12-1-25
3	REVISED WITH CITY COMMENTS	12-5-25

CONFORMED SET

GEORGIA REGISTERED No. PE046341 PROFESSIONAL ENGINEER ANDREW D SWICEGOOD

DRAWN BY: JDM
CHECKED BY: ADS
DATE: OCT 2025
SCALE: SEE SCALE

CONTENT:

CIVIL:
BUILDING ELEVATIONS

SHEET NO: 2 3

C5.0

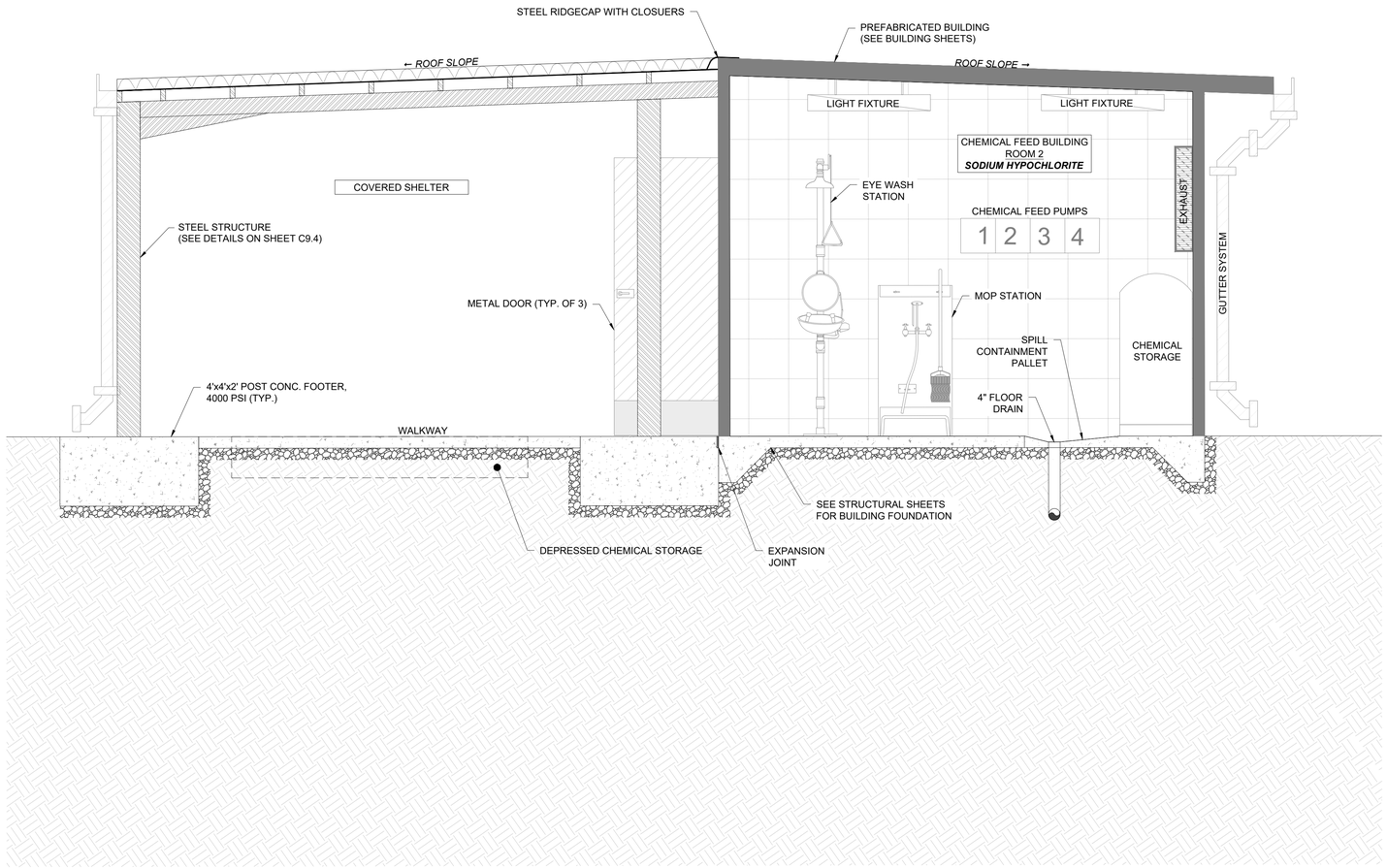

SECTION C - C
SCALE: 1/2" = 1'

ESG ENGINEERING
6400 Peake Rd
Macon, GA 31210
Ph: (478) 474-4996
Fax: (478) 474-5045

GROUNDWATER WELLS #4 & #5

FOR THE
CITY OF FLOWERY BRANCH

REVISIONS

NO.	DESCRIPTION	DATE
1	ESPC SHEETS	11-7-25
2	REVISED WITH CITY COMMENTS	12-1-25

CONFORMED SET

GEORGIA REGISTERED No. PE046341 PROFESSIONAL ENGINEER ANDREW D SWICEGOOD

DRAWN BY: JDM
CHECKED BY: ADS
DATE: OCT 2025
SCALE: SEE SCALE

CONTENT:

CIVIL:
BUILDING ELEVATIONS

SHEET NO:

C5.1

Last Saved By: Eleonard
Plotted: 12/2/2025 9:19 AM
Drawing Path: Z:\Engineer Projects\F0002 - FLOWERY BRANCH, CITY OF\Fxxxx.xxx Groundwater Well Restoration\Base\CAD\C5 Profiles.dwg

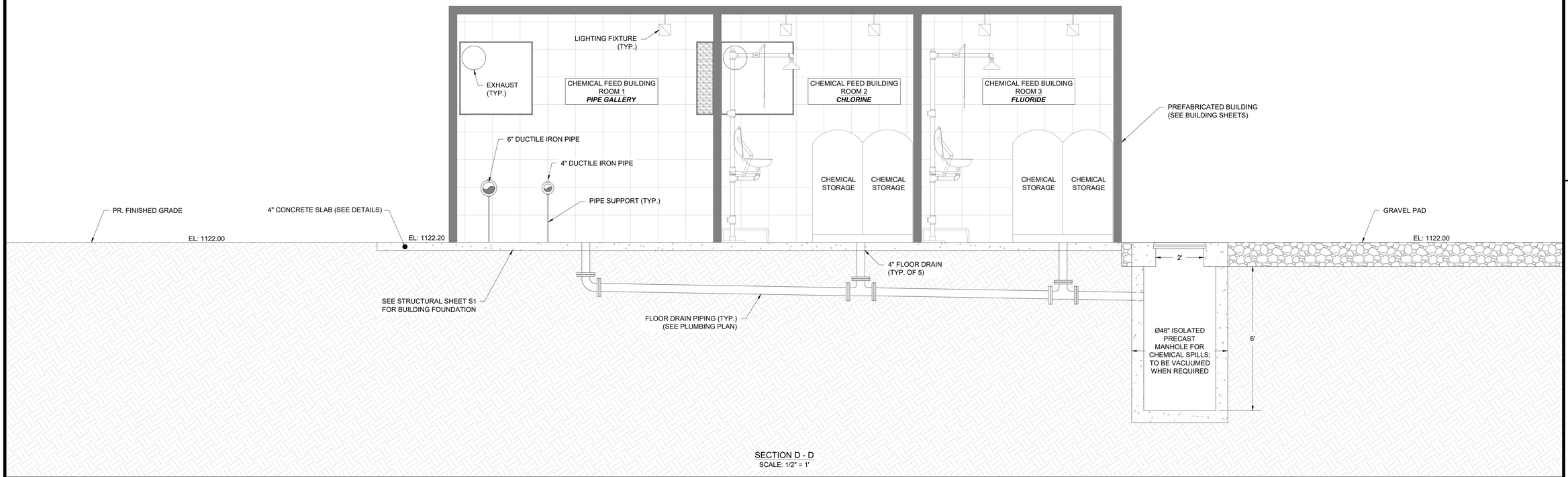

SECTION D - D
SCALE: 1/2" = 1'

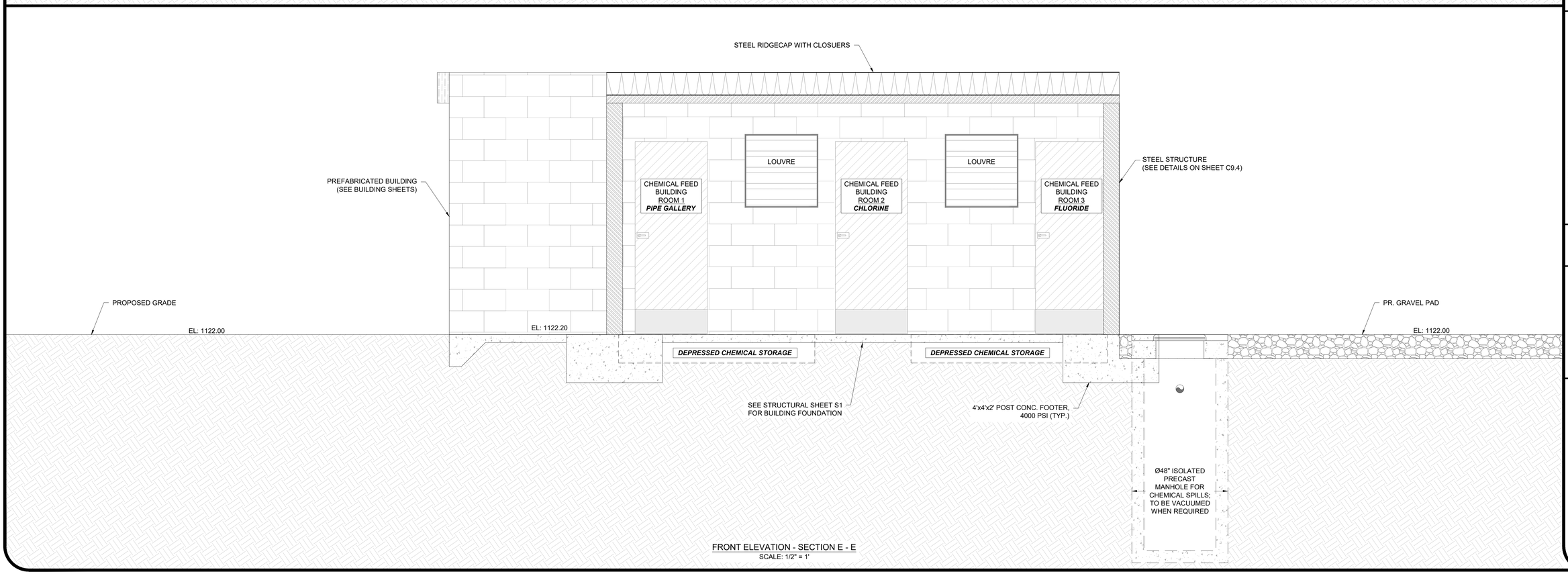

FRONT ELEVATION - SECTION E - E
SCALE: 1/2" = 1'

ESG ENGINEERING
6400 Peake Rd
Macon, GA 31210
Ph: (478) 474-4996
Fax: (478) 474-5045

GROUNDWATER WELLS #4 & #5

FOR THE
CITY OF FLOWERY BRANCH

REVISIONS

NO.	DESCRIPTION	DATE
1	ESPC SHEETS	11-7-25
2	BID SET OF PLANS	12-1-25
3	REVISED WITH CITY COMMENTS	12-5-25
4	ADDENDUM #1	12-8-25

CONFORMED SET

GEORGIA REGISTERED No. PE046341 PROFESSIONAL ENGINEER ANDREW D SWICEGOOD

DRAWN BY: JDM
CHECKED BY: ADS
DATE: OCT 2025
SCALE: SEE SCALE

CONTENT:

CIVIL:
BUILDING ELEVATIONS

SHEET NO: 4

C5.2

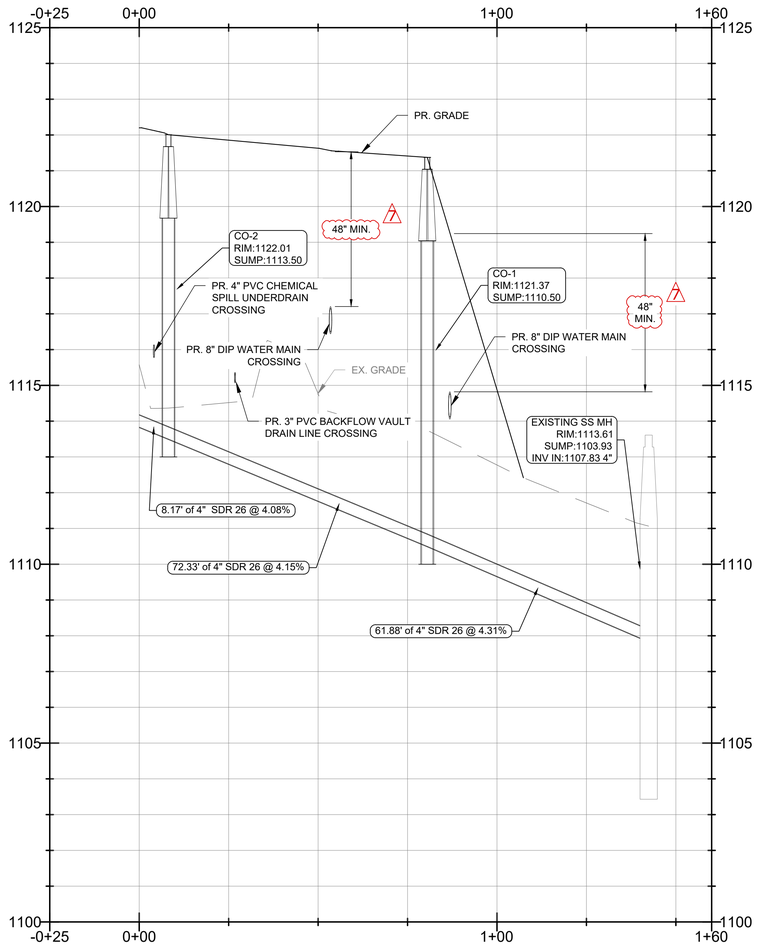

SANITARY SEWER ALIGNMENT

ESG ENGINEERING
6400 Peake Rd
Macon, GA 31210
Ph: (478) 474-4996
Fax: (478) 474-5045

GROUNDWATER WELLS #4 & #5

FOR THE
CITY OF FLOWERY BRANCH

REVISIONS

NO	DESCRIPTION	DATE
1	ESPC SHEETS	11-7-25
2	BID SET OF PLANS	12-1-25
3	REVISED WITH CITY COMMENTS	12-5-25
4	ADDENDUM #1	12-8-25
5	ADDENDUM #2	12-11-25
6	ADDENDUM #3	12-12-25
7	REVISED WITH CITY COMMENTS	12-17-25

CONFORMED SET

GEORGIA
REGISTERED
No. PE046341
PROFESSIONAL
ENGINEER
ANDREW D SWICEGOOD

DRAWN BY: DSC
CHECKED BY: ADS
DATE: OCT 2025
SCALE: H: 1" = 20'
V: 1" = 2'

CONTENT:

CIVIL:
SANITARY SEWER PROFILE

SHEET NO: 2 3 7

C5.3

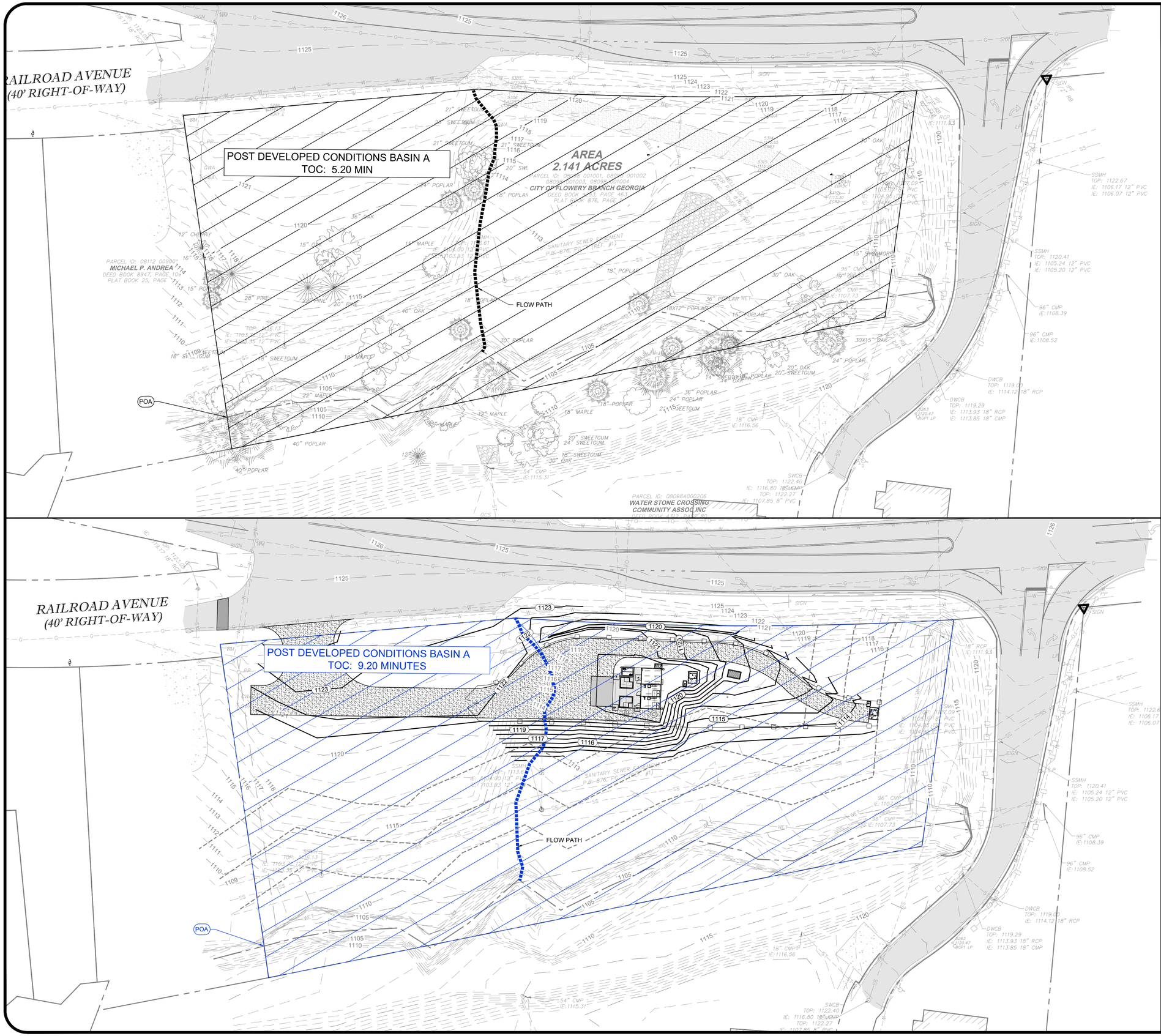

SITE INFORMATION

PROJECT ADDRESS	4745 ATLANTA HWY
PARCEL NUMBER	08098 001001 THRU 08098 001004
PARCEL ZONING	H-B
PROJECT AREA	2.14 ACRES
BUILDING SETBACK	
FRONT	NONE
REAR	30'
SIDE	10'
LANDSCAPE SETBACK	
FRONT	10'
REAR	30'
SIDE	NONE

SITE DRAINAGE DESCRIPTION:

THE PROPOSED DEVELOPMENT FOR THE CITY OF FLOWERY BRANCH, GEORGIA IS LOCATED AT 4745 ATLANTA HIGHWAY (SR13). THE PROJECT AREA CONSISTS OF 2.14 ACRES OF OPEN AREA. THE PRE-DEVELOPED CONDITION CONSIST OF ONE DRAINAGE BASIN. BASIN A SHEET FLOWS TOWARDS THE SOUTH AND DISCHARGES ALONG THE SOUTH PROPERTY LINE INTO THE CREEK. THE PROPOSED DEVELOPMENT WILL CONSIST OF ±1600 SQFT OF COVERED OUTDOOR SPACE AND WELL HOUSE BUILDING FOR THE REHABILITATION OF TWO WELLS PURCHASED BY FLOWERY BRANCH FROM THE STATE OF GEORGIA. THE WELL HOUSE BUILDING IS A THREE ROOM STRUCTURE WITH AN ATTACHED POLE BARN. THE WELL HOUSE BUILDING IS THREE SEPARATE ROOMS; ONE PIPE GALLERY AND THE REMAINING ROOMS SEPARATE CHEMICAL FEED ROOMS. A SMALL PORTION OF THE PROPERTY WILL HAVE ASPHALT FOR LOADING/UNLOADING. TWO SMALL CONCRETE BASINS WILL SUPPORT CHEMICAL STORAGE. THIS STRUCTURE IS UTILITARIAN IN NATURE. THE POST-DEVELOPED CONDITIONS CONSIST OF ONE DRAINAGE BASIN. BASIN "A" CONTINUES TO SHEET FLOW IN THE SAME PATTERN AS BEFORE BUT WITH A SLOWER RELEASE DO TO SUBTLER GRADE CHANGES ACROSS THE SITE. IT DRAINS TO THE SOUTH OF THE PROPERTY AND ENTERS THE CREEK IN THE SAME FASHION. THE POST DEVELOPED PROPERTY CONDITIONS REDUCES STORMWATER RUNOFF AS REQUIRED BY LOCAL AND/OR STATE STANDARDS AND REGULATIONS.

FLOODPLAIN DESCRIPTION:

THE PROPERTY SHOWN HEREON IS LOCATED IN FLOOD ZONE "X" AS PER FLOOD INSURANCE RATE MAP FOR CITY OF FLOWERY BRANCH 130408, AND SHOWN ON MAP NO. 13293C0089D. WITH AN EFFECTIVE DATE OF 09/25/2009. FLOOD ZONE "X" DENOTES AN AREA OF MINIMAL FLOOD HAZARD.

HYDROLOGIC BASIN DESCRIPTION:

PRE-DEVELOPED BASIN

BASIN A: 2.14 ACRES (69) - T_C: 5.20 MINS 25-YR PEAK RUNOFF: 9.93 CFS
- IMPERVIOUS AREA: 0.00 AC (HSG-B)
- OPEN AREA (GOOD CONDITION): 2.14 AC (HSG-B)
- WOODED AREA (GOOD COVER): 0.00 AC (HSG-B)

POST-DEVELOPED BASIN

BASIN A TO STORM SYSTEM 2.14 ACRES (61) - T_C: 9.20 MINS 25-YR PEAK RUNOFF: 6.84 CFS
- IMPERVIOUS AREA: 0.04 AC (HSG-B)
- OPEN AREA (GOOD CONDITION): 2.10 AC (HSG-B)
- WOODED AREA (GOOD COVER): 0.00 AC (HSG-B)

DISTURBED AREA NOTES

1. THE TOTAL PROJECT SITE IS 2.14 ACRES.
2. THE TOTAL ON-SITE DISTURBED AREA IS 0.92 ACRES (WELL SITE PROJECT).
3. THE TOTAL OFF-SITE DISTURBED AREA IS 0.14 ACRES (WATER MAIN EXTENSION.
4. THE TOTAL PROJECT DISTURBED AREA (INCLUDING ON- AND OFF-SITE AREAS) IS 1.06 ACRES.
5. DUE TO THE PROP. ESC MEASURES AND TYPE OF CONSTRUCTION BEING LINEAR, SHALLOW TRENCHING WORK, THE 0.14 ACRES OF "OFF-SITE" AREA IS NOT BEING CONSIDERED AS PART OF THE ON-SITE HYDROLOGY ANALYSIS DUE TO THE INFINITE NUMBER OF FLOW PATHS FOR RUNOFF LEAVING THIS AREA OF THE PROJECT. THEREFORE, THE TRUE "ON-SITE" DISTURBED AREA IS ONLY 0.92 ACRES AND DOES NOT REQUIRE WATER QUALITY MITIGATION MEASURES.

ESG ENGINEERING
6400 Peake Rd
Macon, GA 31210
Ph: (478) 474-4996
Fax: (478) 474-5045

GROUNDWATER WELLS #4 & #5

FOR THE
CITY OF FLOWERY BRANCH

REVISIONS

NO.	DESCRIPTION	DATE
1	ESPC SHEETS	11-7-25
2	BID SET OF PLANS	12-1-25
3	REVISED WITH CITY COMMENTS	12-5-25

CONFORMED SET

GEORGIA REGISTERED No. PE046341 PROFESSIONAL ENGINEER ANDREW D SWICEGOOD

DRAWN BY: DSC
CHECKED BY: ADS
DATE: OCT 2025
SCALE: SEE SCALE

CONTENT:
CIVIL:
HYDROLOGY PLAN

SHEET NO: 4
C6.0

GEORGIA811 www.Georgia811.com

GENERAL NPDES PERMIT NO. GAR100001

30 A) PERMITTEE REQUIREMENTS.

(1). EACH DAY WHEN ANY TYPE OF CONSTRUCTION ACTIVITY HAS TAKEN PLACE AT A PRIMARY PERMITTEE'S SITE, CERTIFIED PERSONNEL PROVIDED BY THE PRIMARY PERMITTEE SHALL INSPECT: (A) ALL AREAS AT THE PRIMARY PERMITTEE'S SITE WHERE PETROLEUM PRODUCTS ARE STORED, USED, OR HANDLED FOR SPILLS AND LEAKS FROM VEHICLES AND EQUIPMENT AND (B) ALL LOCATIONS AT THE PRIMARY PERMITTEE'S SITE WHERE VEHICLES ENTER OR EXIT THE SITE FOR EVIDENCE OF OFF-SITE SEDIMENT TRACKING. THESE INSPECTIONS MUST BE CONDUCTED UNTIL A NOTICE OF TERMINATION IS SUBMITTED.

(2). MEASURE AND RECORD RAINFALL WITHIN DISTURBED AREAS OF THE SITE THAT HAVE NOT MET FINAL STABILIZATION ONCE EVERY 24 HOURS EXCEPT ANY NON-WORKING SATURDAY, NON-WORKING SUNDAY AND NON-WORKING FEDERAL HOLIDAY. THE DATA COLLECTED FOR THE PURPOSE OF COMPLIANCE WITH THIS PERMIT SHALL BE REPRESENTATIVE OF THE MONITORED ACTIVITY. MEASUREMENT OF RAINFALL MAY BE SUSPENDED IF ALL AREAS OF THE SITE HAVE UNDERGONE FINAL STABILIZATION OR ESTABLISHED A CROP OF ANNUAL VEGETATION AND A SEEDING OF TARGET PERENNIALS APPROPRIATE FOR THE REGION.

(3). CERTIFIED PERSONNEL (PROVIDED BY THE PRIMARY PERMITTEE) SHALL INSPECT THE FOLLOWING AT LEAST ONCE EVERY SEVEN (7) CALENDAR DAYS AND WITHIN 24 HOURS OF THE END OF A STORM THAT IS 0.5 INCHES RAINFALL OR GREATER (UNLESS SUCH STORM ENDS AFTER 5:00 PM ON ANY FRIDAY OR ON ANY NON-WORKING SATURDAY, NON-WORKING SUNDAY OR ANY NON-WORKING FEDERAL HOLIDAY IN WHICH CASE THE INSPECTION SHALL BE COMPLETED BY THE END OF THE NEXT BUSINESS DAY AND/OR WORKING DAY, WHICHEVER OCCURS FIRST): (A) DISTURBED AREAS OF THE PRIMARY PERMITTEE'S CONSTRUCTION SITE; (B) AREAS USED BY THE PRIMARY PERMITTEE FOR STORAGE OF MATERIALS THAT ARE EXPOSED TO PRECIPITATION; AND (C) STRUCTURALCONTROL MEASURES. EROSION AND SEDIMENT CONTROL MEASURES IDENTIFIED IN THE PLAN APPLICABLE TO THE PRIMARY PERMITTEE'S SITE SHALL BE OBSERVED TO ENSURE THAT THEY ARE OPERATING CORRECTLY. WHERE DISCHARGE LOCATIONS OR POINTS ARE ACCESSIBLE, THEY SHALL BE INSPECTED TO ASCERTAIN WHETHER EROSION CONTROL MEASURES ARE EFFECTIVE IN PREVENTING SIGNIFICANT IMPACTS TO RECEIVING WATER(S). FOR AREAS OF A SITE THAT HAVE UNDERGONE FINAL STABILIZATION OR ESTABLISHED A CROP OF ANNUAL VEGETATION AND A SEEDING OF TARGET PERENNIALS APPROPRIATE FOR THE REGION, THE PERMITTEE MUST COMPLY WITH PART IV.D.4.A.(4). THESE INSPECTIONS MUST BE CONDUCTED UNTIL A NOTICE OF TERMINATION IS SUBMITTED.

(4). CERTIFIED PERSONNEL (PROVIDED BY THE PRIMARY PERMITTEE) SHALL INSPECT AT LEAST ONCE PER MONTH DURING THE TERM OF THIS PERMIT (I.E., UNTIL A NOTICE OF TERMINATION HAS BEEN SUBMITTED) THE AREAS OF THE SITE THAT HAVE UNDERGONE FINAL STABILIZATION OR ESTABLISHED A CROP OF ANNUAL VEGETATION AND A SEEDING OF TARGET PERENNIALS APPROPRIATE FOR THE REGION. THESE AREAS SHALL BE INSPECTED FOR EVIDENCE OF, OR THE POTENTIAL FOR, POLLUTANTS ENTERING THE DRAINAGE SYSTEM AND THE RECEIVING WATER(S). EROSION AND SEDIMENT CONTROL MEASURES IDENTIFIED IN THE PLAN SHALL BE OBSERVED TO ENSURE THAT THEY ARE OPERATING CORRECTLY. WHERE DISCHARGE LOCATIONS OR POINTS ARE ACCESSIBLE, THEY SHALL BE INSPECTED TO ASCERTAIN WHETHER EROSION CONTROL MEASURES ARE EFFECTIVE IN PREVENTING SIGNIFICANT IMPACTS TO RECEIVING WATER(S).

(5). BASED ON THE RESULTS OF EACH INSPECTION, THE SITE DESCRIPTION AND THE POLLUTION PREVENTION AND CONTROL MEASURES IDENTIFIED IN THE EROSION, SEDIMENTATION AND POLLUTION CONTROL PLAN, THE PLAN SHALL BE REVISED AS APPROPRIATE NOT LATER THAN SEVEN (7) CALENDAR DAYS FOLLOWING EACH INSPECTION. IMPLEMENTATION OF SUCH CHANGES SHALL BE MADE AS SOON AS PRACTICAL BUT IN NO CASE LATER THAN SEVEN (7) CALENDAR DAYS FOLLOWING EACH INSPECTION.

(6). A REPORT OF EACH INSPECTION THAT INCLUDES THE NAME(S) OF CERTIFIED PERSONNEL MAKING EACH INSPECTION, THE DATE(S) OF EACH INSPECTION, CONSTRUCTION PHASE (I.E., INITIAL, INTERMEDIATE OR FINAL), MAJOR OBSERVATIONS RELATING TO THE IMPLEMENTATION OF THE EROSION, SEDIMENTATION AND POLLUTION CONTROL PLAN, AND ACTIONS TAKEN IN ACCORDANCE WITH PART IV.D.4.A.(5). OF THE PERMIT SHALL BE MADE AND RETAINED AT THE SITE OR BE READILY AVAILABLE AT A DESIGNATED ALTERNATE LOCATION UNTIL THE ENTIRE SITE OR THAT PORTION OF A CONSTRUCTION SITE THAT HAS BEEN PHASED HAS UNDERGONE FINAL STABILIZATION AND A NOTICE OF TERMINATION IS SUBMITTED TO EPD. SUCH REPORTS SHALL BE READILY AVAILABLE BY END OF THE SECOND BUSINESS DAY AND/OR WORKING DAY AND SHALL IDENTIFY ALL INCIDENTS OF BEST MANAGEMENT PRACTICES THAT HAVE NOT BEEN PROPERLY INSTALLED AND/OR MAINTAINED AS DESCRIBED IN THE PLAN. WHERE THE REPORT DOES NOT IDENTIFY ANY INCIDENTS, THE INSPECTION REPORT SHALL CONTAIN A CERTIFICATION THAT THE BEST MANAGEMENT PRACTICES ARE IN COMPLIANCE WITH THE EROSION, SEDIMENTATION AND POLLUTION CONTROL PLAN. THE REPORT SHALL BE SIGNED IN ACCORDANCE WITH PART V.G.2. OF THIS PERMIT.

5. MAINTENANCE. THE PLAN SHALL INCLUDE A DESCRIPTION OF PROCEDURES TO ENSURE THE TIMELY MAINTENANCE OF VEGETATION, EROSION AND SEDIMENT CONTROL MEASURES AND OTHER PROTECTIVE MEASURES IDENTIFIED IN THE SITE PLAN.

33 6. SAMPLING REQUIREMENTS. THIS PERMIT REQUIRES THE MONITORING OF NEPHELOMETRIC TURBIDITY IN RECEIVING WATER(S) OR OUTFALLS IN ACCORDANCE WITH THIS PERMIT. THIS PARAGRAPH SHALL NOT APPLY TO ANY LAND DISTURBANCE ASSOCIATED WITH THE CONSTRUCTION OF SINGLE-FAMILY HOMES WHICH ARE NOT PART OF A SUBDIVISION OR PLANNED COMMON DEVELOPMENT UNLESS FIVE (5) ACRES OR MORE WILL BE DISTURBED. THE FOLLOWING PROCEDURES CONSTITUTE EPD'S GUIDELINES FOR SAMPLING TURBIDITY.

a. SAMPLING REQUIREMENTS SHALL INCLUDE THE FOLLOWING:

(1). A USGS TOPOGRAPHIC MAP, A TOPOGRAPHIC MAP OR A DRAWING (REFERRED TO AS A TOPOGRAPHIC MAP) THAT IS A SCALE EQUAL TO OR MORE DETAILED THAN A 1:24000 MAP SHOWING THE LOCATION OF THE SITE OR THE STAND ALONE CONSTRUCTION; (A) THE LOCATION OF ALL PERENNIAL AND INTERMITTENT STREAMS AND OTHER WATER BODIES AS SHOWN ON A USGS TOPOGRAPHIC MAP, AND ALL OTHER PERENNIAL AND INTERMITTENT STREAMS AND OTHER WATER BODIES LOCATED DURING MANDATORY FIELD VERIFICATION, INTO WHICH THE STORMWATER IS DISCHARGED AND (B) THE RECEIVING WATER AND/OR OUTFALL SAMPLING LOCATIONS. WHEN THE PERMITTEE HAS CHOSEN TO USE A USGS TOPOGRAPHIC MAP AND THE RECEIVING WATER(S) IS NOT SHOWN ON THE USGS TOPOGRAPHIC MAP, THE LOCATION OF THERECEIVING WATER(S) MUST BE HAND-DRAWN ON THE USGS TOPOGRAPHIC MAP FROM WHERE THE STORMWATER(S) ENTERS THE RECEIVING WATER(S) TO THE POINT WHERE THE RECEIVING WATER(S) COMBINES WITH THE FIRST BLUE LINE STREAM SHOWN ON THE USGSTOPOGRAPHIC MAP;

(2). A WRITTEN NARRATIVE OF SITE SPECIFIC ANALYTICAL METHODS USED TO COLLECT, HANDLE AND ANALYZE THE SAMPLES INCLUDING QUALITY CONTROL/QUALITY ASSURANCE PROCEDURES. THIS NARRATIVE MUST INCLUDE PRECISE SAMPLING METHODOLOGY FOR EACH SAMPLING LOCATION;

(3). WHEN THE PERMITTEE HAS DETERMINED THAT SOME OR ALL OUTFALLS WILL BE SAMPLED, A RATIONALE MUST BE INCLUDED ON THE PLAN FOR THE NTU LIMIT(S) SELECTED FROM APPENDIX B. THIS RATIONALE MUST INCLUDE THE SIZE OF THE CONSTRUCTION SITE, THE CALCULATION OF THE SIZE OF THE SURFACE WATER DRAINAGE AREA, AND THE TYPE OF RECEIVING WATER(S) (I.E., TROUT STREAM OR SUPPORTING WARM WATER FISHERIES); AND

(4). ANY ADDITIONAL INFORMATION EPD DETERMINES NECESSARY TO BE PART OF THE PLAN. EPD WILL PROVIDE WRITTEN NOTICE TO THE PERMITTEE OF THE INFORMATION NECESSARY AND THE TIME LINE FOR SUBMITTAL.

b. SAMPLE TYPE. ALL SAMPLING SHALL BE COLLECTED BY "GRAB SAMPLES" AND THE ANALYSIS OF THESE SAMPLES MUST BE CONDUCTED IN ACCORDANCE WITH METHODOLOGY AND TEST PROCEDURES ESTABLISHED BY 40 CFR PART 136 (UNLESS OTHER TEST PROCEDURES HAVE BEEN APPROVED); THE GUIDANCE DOCUMENT TITLED "NPDES STORM WATER SAMPLING GUIDANCE DOCUMENT,EPA 833-B-92-001" AND GUIDANCE DOCUMENTS THAT MAY BE PREPARED BY THE EPD.

(1). SAMPLE CONTAINERS SHOULD BE LABELED PRIOR TO COLLECTING THE SAMPLES.

(2). SAMPLES SHOULD BE WELL MIXED BEFORE TRANSFERRING TO A SECONDARY CONTAINER.

(3). LARGE MOUTH, WELL CLEANED AND RINSED GLASS OR PLASTIC JARS SHOULD BE USED FOR COLLECTING SAMPLES. THE JARS SHOULD BE CLEANED THOROUGHLY TO AVOID CONTAMINATION.

(4). MANUAL, AUTOMATIC OR RISING STAGE SAMPLING MAY BE UTILIZED. SAMPLES REQUIRED BY THIS PERMIT SHOULD BE ANALYZED IMMEDIATELY, BUT IN NO CASE LATER THAN 48 HOURS AFTER COLLECTION. HOWEVER, SAMPLES FROM AUTOMATIC SAMPLERS MUST BE COLLECTED NO LATER THAN THE NEXT BUSINESS DAY AFTER THEIR ACCUMULATION, UNLESS FLOW THROUGH AUTOMATED ANALYSIS IS UTILIZED. IF AUTOMATIC SAMPLING IS UTILIZED AND THE AUTOMATIC SAMPLER IS NOT ACTIVATED DURING THE QUALIFYING EVENT, THE PERMITTEE MUST UTILIZE MANUAL SAMPLING OR RISING STAGE SAMPLING DURING THE NEXT QUALIFYING EVENT. DILUTION OF SAMPLES IS NOT REQUIRED. SAMPLES MAY BE ANALYZED DIRECTLY WITH A PROPERLY CALIBRATED TURBIDIMETER. SAMPLES ARE NOT REQUIRED TO BE COOLED.

(5). SAMPLING AND ANALYSIS OF THE RECEIVING WATER(S) OR OUTFALLS BEYOND THE MINIMUM FREQUENCY STATED IN THIS PERMIT MUST BE REPORTED TO EPD AS SPECIFIED IN PART IV.E.

c. SAMPLING POINTS.

(1). FOR CONSTRUCTION ACTIVITIES THE PRIMARY PERMITTEE MUST SAMPLE ALL RECEIVING WATER(S), OR ALL OUTFALL(S), OR A COMBINATION OF RECEIVING WATER(S) AND OUTFALL(S). SAMPLES TAKEN FOR THE PURPOSE OF COMPLIANCE WITH THIS PERMIT SHALL BE REPRESENTATIVE OF THE MONITORED ACTIVITY AND REPRESENTATIVE OF THE WATER QUALITY OF THE RECEIVING WATER(S) AND/OR THE STORMWATER OUTFALLS USING THE FOLLOWING MINIMUM GUIDELINES:

(A). THE UPSTREAM SAMPLE FOR EACH RECEIVING WATER(S) MUST BE TAKEN IMMEDIATELY UPSTREAM OF THE CONFLUENCE OF THE FIRST STORMWATER DISCHARGE FROM THE PERMITTED ACTIVITY (I.E., THE DISCHARGE FARTHEST UPSTREAM AT THE SITE) BUT DOWNSTREAM OF ANY OTHER STORMWATER DISCHARGES NOT ASSOCIATED WITH THE PERMITTED ACTIVITY. WHERE APPROPRIATE, SEVERAL UPSTREAM SAMPLES FROM ACROSS THE RECEIVING WATER(S) MAY NEED TO BE TAKEN AND THE ARITHMETIC AVERAGE OF THE TURBIDITY OF THESE SAMPLES USED FOR THE UPSTREAM TURBIDITY

(B). THE DOWNSTREAM SAMPLE FOR EACH RECEIVING WATER(S) MUST BE TAKEN DOWNSTREAM OF THE CONFLUENCE OF THE LAST STORMWATER DISCHARGE FROM THE PERMITTED ACTIVITY (I.E., THE DISCHARGE FARTHEST DOWNSTREAM AT THE SITE) BUT UPSTREAM OF ANY OTHER STORMWATER DISCHARGE NOT ASSOCIATED WITH THE PERMITTED ACTIVITY. WHERE APPROPRIATE, SEVERAL DOWNSTREAM SAMPLES FROM ACROSS THE RECEIVING WATER(S) MAY NEED TO BE TAKEN AND THE ARITHMETIC AVERAGE OF THE TURBIDITY OF THESE SAMPLES USED FOR THE DOWNSTREAM TURBIDITY VALUE.

(C). IDEALLY THE SAMPLES SHOULD BE TAKEN FROM THE HORIZONTAL AND VERTICAL CENTER OF THE RECEIVING WATER(S) OR THE STORMWATER OUTFALL CHANNEL(S).

(D). CARE SHOULD BE TAKEN TO AVOID STIRRING THE BOTTOM SEDIMENTS IN THE RECEIVING WATER(S) OR IN THE OUTFALL STORMWATER CHANNEL.

(E). THE SAMPLING CONTAINER SHOULD BE HELD SO THAT THE OPENING FACES UPSTREAM.

(F). THE SAMPLES SHOULD BE KEPT FREE FROM FLOATING DEBRIS.

(G). PERMITTEES DO NOT HAVE TO SAMPLE SHEET FLOW THAT FLOWS ONTO UNDISTURBED NATURAL AREAS OR AREAS STABILIZED BY THE PROJECT. FOR PURPOSES OF THIS SECTION, STABILIZED SHALL MEAN, FOR UNPAVED AREAS AND AREAS NOT COVERED BY PERMANENT STRUCTURES AND AREAS LOCATED OUTSIDE THE WASTE DISPOSAL LIMITS OF A LANDFILL CELL THAT HAS BEEN CERTIFIED BY EPD FOR WASTE DISPOSAL, 100% OF THE SOIL SURFACE IS UNIFORMLY COVERED IN PERMANENT VEGETATION WITH A DENSITY OF 70% OR GREATER, OR LANDSCAPED ACCORDING TO THE PLAN (UNIFORMLY COVERED WITH LANDSCAPING MATERIALS IN PLANNED LANDSCAPED AREAS), OR EQUIVALENT PERMANENT STABILIZATION MEASURES AS DEFINED IN THE MANUAL (EXCLUDING A CROP OF ANNUAL VEGETATION AND A SEEDING OF TARGET CROP PERENNIALS APPROPRIATE FOR THE REGION).

(H). ALL SAMPLING PURSUANT TO THIS PERMIT MUST BE DONE IN SUCH A WAY (INCLUDING GENERALLY ACCEPTED SAMPLING METHODS, LOCATIONS, TIMING, AND FREQUENCY) AS TO ACCURATELY REFLECT WHETHER STORMWATER RUNOFF FROM THE CONSTRUCTION SITE IS IN COMPLIANCE WITH THE STANDARD SET FORTH IN PARTS OR III.D.4., WHICHEVER IS APPLICABLE.

31 d. SAMPLING FREQUENCY.

(1). THE PRIMARY PERMITTEE MUST SAMPLE IN ACCORDANCE WITH THE PLAN AT LEAST ONCE FOR EACH RAINFALL EVENT DESCRIBED BELOW. FOR A QUALIFYING EVENT, THE PERMITTEE SHALL SAMPLE AT THE BEGINNING OF ANY STORMWATER DISCHARGE TO A MONITORED RECEIVING WATER AND/OR FROM A MONITORED OUTFALL LOCATION WITHIN IN FORTY-FIVE (45) MINUTES OR AS SOON AS POSSIBLE.

(2). HOWEVER, WHERE MANUAL AND AUTOMATIC SAMPLING ARE IMPOSSIBLE (AS DEFINED IN THIS PERMIT), OR ARE BEYOND THE PERMITTEE'S CONTROL, THE PERMITTEE SHALL TAKE SAMPLES AS SOON AS POSSIBLE, BUT IN NO CASE MORE THAN TWELVE (12) HOURS AFTER THE BEGINNING OF THE STORMWATER DISCHARGE.

(3). SAMPLING BY THE PERMITTEE SHALL OCCUR FOR THE FOLLOWING QUALIFYING EVENTS:

(A). FOR EACH AREA OF THE SITE THAT DISCHARGES TO A RECEIVING WATER OR FROM AN OUTFALL, THE FIRST RAIN EVENT THAT REACHES OR EXCEEDS 0.5 INCH WITH A STORMWATER DISCHARGE THAT OCCURS DURING NORMAL BUSINESS HOURS AS DEFINED IN THIS PERMIT AFTER ALL CLEARING AND GRUBBING OPERATIONS HAVE BEEN COMPLETED, BUT PRIOR TO COMPLETION OF MASS GRADING OPERATIONS, IN THE DRAINAGE AREA OF THE LOCATION SELECTED AS THE SAMPLING LOCATION;

(B). IN ADDITION TO (A) ABOVE, FOR EACH AREA OF THE SITE THAT DISCHARGES TO A RECEIVING WATER OR FROM AN OUTFALL, THE FIRST RAIN EVENT THAT REACHES OR EXCEEDS 0.5 INCH WITH A STORMWATER DISCHARGE THAT OCCURS DURING NORMAL BUSINESS HOURS AS DEFINED IN THIS PERMIT EITHER 30 DAYS AFTER THE FIRST SAMPLING EVENT OR AFTER ALL MASS GRADING OPERATIONS HAVE BEEN COMPLETED, BUT PRIOR TO SUBMITTAL OF A NOT, IN THE DRAINAGE AREA OF THE LOCATION SELECTED AS THE SAMPLING LOCATION, WHICHEVER COMES FIRST;

(C). AT THE TIME OF SAMPLING PERFORMED PURSUANT TO (A) AND (B) ABOVE, IF BMPS IN ANY AREA OF THE SITE THAT DISCHARGES TO A RECEIVING WATER OR FROM AN OUTFALL ARE NOT PROPERLY DESIGNED, INSTALLED AND MAINTAINED, CORRECTIVE ACTION SHALL BE DEFINED AND IMPLEMENTED WITHIN TWO (2) BUSINESS DAYS, AND TURBIDITY SAMPLES SHALL BE TAKEN FROM DISCHARGES FROM THAT AREA OF THE SITE FOR EACH SUBSEQUENT RAIN EVENT THAT REACHES OR EXCEEDS 0.5 INCH DURING NORMAL BUSINESS HOURS* UNTIL THE SELECTED TURBIDITY STANDARD IS ATTAINED, OR UNTIL POST-STORM EVENT INSPECTIONS DETERMINE THAT BMPS ARE PROPERLY DESIGNED, INSTALLED AND MAINTAINED;

(D). WHERE SAMPLING PURSUANT TO (A), (B) OR (C) ABOVE IS REQUIRED BUT NOT POSSIBLE (OR NOT REQUIRED BECAUSE THERE WAS NO DISCHARGE), THE PERMITTEE, IN ACCORDANCE WITH PART IV.D.4.A.(6), MUST INCLUDE A WRITTEN JUSTIFICATION IN THE INSPECTION REPORT OF WHY SAMPLING WAS NOT PERFORMED. PROVIDING THIS JUSTIFICATION DOES NOT RELIEVE THE PERMITTEE OF ANY SUBSEQUENT SAMPLING OBLIGATIONS UNDER (A), (B) OR (C) ABOVE; AND

(E). EXISTING CONSTRUCTION ACTIVITIES, I.E., THOSE THAT ARE OCCURRING ON OR BEFORE THE EFFECTIVE DATE OF THIS PERMIT, THAT HAVE MET THE SAMPLING REQUIRED BY (A) ABOVE SHALL SAMPLE IN ACCORDANCE WITH (B). THOSE EXISTING CONSTRUCTION ACTIVITIES THAT HAVE MET THE SAMPLING REQUIRED BY (B) ABOVE SHALL NOT BE REQUIRED TO CONDUCT ADDITIONAL SAMPLING OTHER THAN AS REQUIRED BY (C) ABOVE.

*NOTE THAT THE PERMITTEE MAY CHOOSE TO MEET THE REQUIREMENTS OF (A) AND ABOVE BY COLLECTING TURBIDITY SAMPLES FROM ANY RAIN EVENT THAT REACHES OR EXCEEDS 0.5 INCH AND ALLOWS FOR SAMPLING AT ANY TIME OF THE DAY OR WEEK.

7. NON-STORMWATER DISCHARGES. EXCEPT FOR FLOWS FROM FIRE FIGHTING ACTIVITIES, SOURCES OF NON-STORMWATER LISTED IN PART III.A.2. OF THIS PERMIT THAT ARE COMBINED WITH STORMWATER DISCHARGES ASSOCIATED WITH CONSTRUCTION ACTIVITY MUST BE IDENTIFIED IN THE PLAN. THE PLAN SHALL IDENTIFY AND ENSURE THE IMPLEMENTATION OF APPROPRIATE POLLUTION PREVENTION MEASURES FOR THE NON-STORMWATER COMPONENT(S) OF THE DISCHARGE.

E. REPORTING.

1. THE APPLICABLE PERMITTEES ARE REQUIRED TO SUBMIT THE SAMPLING RESULTS TO THE EPD AT THE ADDRESS SHOWN IN PART II.C. BY THE FIFTEENTH DAY OF THE MONTH FOLLOWING THE REPORTING PERIOD. REPORTING PERIODS ARE MONTHS DURING WHICH SAMPLES ARE TAKEN IN ACCORDANCE WITH THIS PERMIT. SAMPLING RESULTS SHALL BE IN A CLEARLY LEGIBLE FORMAT. UPON WRITTEN NOTIFICATION, EPD MAY REQUIRE THE APPLICABLE PERMITTEE TO SUBMIT THE SAMPLING RESULTS ON A MORE FREQUENT BASIS. SAMPLING AND ANALYSIS OF ANY STORMWATER DISCHARGE(S) OR THE RECEIVING WATER(S) BEYOND THE MINIMUM FREQUENCY STATED IN THIS PERMIT MUST BE REPORTED IN A SIMILAR MANNER TO THE EPD. THE SAMPLING REPORTS MUST BE SIGNED IN ACCORDANCE WITH PART V.G.2. SAMPLING REPORTS MUST BE SUBMITTED TO EPD USING THE ELECTRONIC SUBMITTAL SERVICE PROVIDED BY EPD. SAMPLING REPORTS MUST BE SUBMITTED TO EPD UNTIL SUCH TIME AS A NOT IS SUBMITTED IN ACCORDANCE WITH PART VI.

2. ALL SAMPLING REPORTS SHALL INCLUDE THE FOLLOWING INFORMATION:

a. THE RAINFALL AMOUNT, DATE, EXACT PLACE AND TIME OF SAMPLING OR MEASUREMENTS;
b. THE NAME(S) OF THE CERTIFIED PERSONNEL WHO PERFORMED THE SAMPLING AND MEASUREMENTS;
c. THE DATE(S) ANALYSES WERE PERFORMED;
d. THE TIME(S) ANALYSES WERE INITIATED;
e. THE NAME(S) OF THE CERTIFIED PERSONNEL WHO PERFORMED THE ANALYSES;
f. REFERENCES AND WRITTEN PROCEDURES, WHEN AVAILABLE, FOR THE ANALYTICAL TECHNIQUES OR METHODS USED;
g. THE RESULTS OF SUCH ANALYSES, INCLUDING THE BENCH SHEETS, INSTRUMENT READOUTS, COMPUTER DISKS OR TAPES, ETC., USED TO DETERMINE THESE RESULTS;
h. RESULTS WHICH EXCEED 1000 NTU SHALL BE REPORTED AS "EXCEEDS 1000 NTU;" AND
i. CERTIFICATION STATEMENT THAT SAMPLING WAS CONDUCTED AS PER THE PLAN.

3. ALL WRITTEN CORRESPONDENCE REQUIRED BY THIS PERMIT SHALL BE SUBMITTED BY RETURN RECEIPT CERTIFIED MAIL (OR SIMILAR SERVICE) TO THE APPROPRIATE DISTRICT OFFICE OF THE EPD ACCORDING TO THE SCHEDULE IN APPENDIX A OF THIS PERMIT. THE PERMITTEE SHALL RETAIN A COPY OF THE PROOF OF SUBMITTAL AT THE CONSTRUCTION SITE OR THE PROOF OF SUBMITTAL SHALL BE READILY AVAILABLE AT A DESIGNATED LOCATION FROM COMMENCEMENT OF CONSTRUCTION UNTIL SUCH TIME AS A NOT IS SUBMITTED IN ACCORDANCE WITH PART VI.

32 F. RETENTION OF RECORDS.

1. THE PRIMARY PERMITTEE SHALL RETAIN THE FOLLOWING RECORDS AT THE CONSTRUCTION SITE OR THE RECORDS SHALL BE READILY AVAILABLE AT A DESIGNATED ALTERNATE LOCATION FROM COMMENCEMENT OF CONSTRUCTION UNTIL SUCH TIME AS A NOT IS SUBMITTED IN ACCORDANCE WITH PART VI:

a. A COPY OF ALL NOTICES OF INTENT SUBMITTED TO EPD;
b. A COPY OF THE EROSION, SEDIMENTATION AND POLLUTION CONTROL PLAN REQUIRED BY THIS PERMIT;
c. THE DESIGN PROFESSIONAL'S REPORT OF THE RESULTS OF THE INSPECTION CONDUCTED IN ACCORDANCE WITH PART IV.A.5. OF THIS PERMIT;
d. A COPY OF ALL SAMPLING INFORMATION, RESULTS, AND REPORTS REQUIRED BY THIS PERMIT;
e. A COPY OF ALL INSPECTION REPORTS GENERATED IN ACCORDANCE WITH PART IV.D.4.A. OF THIS PERMIT;
f. A COPY OF ALL VIOLATION SUMMARIES AND VIOLATION SUMMARY REPORTS GENERATED IN ACCORDANCE WITH PART III.D.2. OF THIS PERMIT; AND
g. DAILY RAINFALL INFORMATION COLLECTED IN ACCORDANCE WITH PART IV.D.4.A.(2). OF THIS PERMIT.

2. COPIES OF ALL NOTICES OF INTENT, NOTICES OF TERMINATION, INSPECTION REPORTS, SAMPLING REPORTS (INCLUDING ALL CALIBRATION AND MAINTENANCE RECORDS AND ALL ORIGINAL STRIP CHART RECORDINGS FOR CONTINUOUS MONITORING INSTRUMENTATION) OR OTHER REPORTS REQUESTED BY THE EPD, EROSION, SEDIMENTATION AND POLLUTION CONTROL PLANS, RECORDS OF ALL DATA USED TO COMPLETE THE NOTICE OF INTENT TO BE COVERED BY THIS PERMIT AND ALL OTHER RECORDS REQUIRED BY THIS PERMIT SHALL BE RETAINED BY THE PERMITTEE WHO EITHER PRODUCED OR USED IT FOR A PERIOD OF AT LEAST THREE YEARS FROM THE DATE THAT THE NOT IS SUBMITTED IN ACCORDANCE WITH PART VI. OF THIS PERMIT. THESE RECORDS MUST BE MAINTAINED AT THE PERMITTEE'S PRIMARY PLACE OF BUSINESS OR AT A DESIGNATED ALTERNATIVE LOCATION ONCE THE CONSTRUCTION ACTIVITY HAS CEASED AT THE PERMITTED SITE. THIS PERIOD MAY BE EXTENDED BY REQUEST OF THE EPD AT ANY TIME UPON WRITTEN NOTIFICATION TO THE PERMITTEE.

GROUNDWATER WELL RESTORATION

APPENDIX 1

THE ES&PC PLAN MUST INCLUDE AT LEAST FOUR (4) OF THE FOLLOWING BMPS FOR THOSE AREAS OF THE SITE WHICH DISCHARGE TO AN IMPAIRED STREAM SEGMENT AND FOR SITES WHICH EPD HAS APPROVED IN WRITING A REQUEST TO DISTURB 50 ACRES OR MORE AT ANY ONE TIME.

The four items chosen must be appropriate for the site conditions.

Plan Page #	Included Y/N	
	N	a. During construction activities, double the width of the 25-foot undisturbed vegetated buffer along all State waters requiring a buffer and the 50-foot undisturbed vegetated buffer along all State waters classified as "trout streams" requiring a buffer. During construction activities, EPD will not grant variances to any such buffers that are increased in width.
	N	b. Increase all temporary sediment basins and retrofitted storm water management basins to provide sediment storage of at least 3600 cubic feet (134 cubic yards) per acre drained.
	N	c. Use baffles in all temporary sediment basins and retrofitted storm water management basins to at least double the conventional flow path length to the outlet structure.
C7.1	Y	d. A large sign (minimum 4 feet x 8 feet) must be posted on site by the actual start date of construction. The sign must be visible from a public roadway. The sign must identify the following: (1) construction site, (2) the permittee(s), (3) the contact person(s) and telephone number(s), and (4) the permittee-hosted website where the Plan can be viewed must be provided on the submitted NOI. The sign must remain on site and the Plan must be available on the provided website until a NOT has been submitted.
C8.0	Y	e. Use tackifiers and/or mulch to stabilize areas left disturbed for more than seven (7) calendar days in accordance with **Part III. D.1.** of the current NPDES Permits.
	N	f. Conduct turbidity sampling after every rain event of 0.5 inch or greater within any 24-hour period, recognizing the exceptions specified in **Part IV.D.6.d.** of the current NPDES Permits.
	N	g. Comply with the applicable end-of-pipe turbidity effluent limit, without the "BMP defense" as provided for in O.C.G.A. 12-7-6 (a)(1).
C8.0	Y	h. Reduce the total planned site disturbance to less than 50% impervious surfaces (excluding any State-mandated buffer areas from such calculations). All calculations must be included on the Plan.
	N	i. Limit the amount of disturbed area at any one time to no greater than 25 acres or 50% of the total planned site, whichever is less. All calculations must be included on the Plan.
	N	j. Use "Dirt II" techniques available on the EPD website to model and manage construction storm water runoff (including sheet flow). All calculations must be included on the Plan. (https://epd.georgia.gov/erosion-and-sedimentation)
	N	k. Conduct soil tests representative of conditions at the time of planting to identify and to implement site-specific fertilizer needs and/or add appropriate organic soil amendments (e.g., compost) and conduct pre- and post-construction soil sampling to a depth of six (6) inches to document improved levels of soil carbon after final stabilization of the construction site.
	N	l. Use mulch filter berms, in addition to a silt fence, on the site perimeter wherever construction storm water (including sheet flow) may be discharged. Mulch filter berms cannot be placed in waterways or areas of concentrated flow.
	N	m. Use appropriate erosion control slope stabilization instead of concrete in all construction storm water ditches and storm drainages designed for a 25-year, 24-hour rainfall event.
	N	n. Use flocculants or coagulants under a passive dosing method (e.g., flocculant blocks) within construction storm water ditches and storm drainages that feed into temporary sediment basins and retrofitted management basins.
	N	o. Install sod for a minimum 20-foot width (in lieu of seeding) after final grade has been achieved, along the site perimeter wherever storm water (including sheet flow) may be discharged.
	N	p. Conduct soil tests to identify and to implement site-specific fertilizer needs
	N	q. Certified personnel for primary permittees shall conduct inspections at least twice every seven (7) calendar days and within 24 hours of the end of the storm that is 0.5 inches rainfall or greater in accordance with **Part IV.D.4.a.(3)(a) – (c)**; secondary permittees, **Part IV.D.4.b.(3)(a) – (c)**; and tertiary permittees **Part IV.D.4.c.(3)(a) – (c)** *
	N	r. Apply the appropriate compost blankets (minimum depth 1.5 inches) to protect soil surfaces until vegetation is established during the final stabilization phase of the construction activity.
	N	s. Use alternative BMPs whose performance has been documented to be superior to conventional BMPs as certified by a Design Professional (unless disapproved by EPD or the Georgia Soil and Water Conservation Commission). (If using this item please refer to the Alternative BMP guidance document found at www.gaswcc.georgia.gov)
C8.0	Y	t. Limit the total planned site disturbance to less than 15% impervious surfaces (excluding any state mandated buffer areas from such calculations). All calculations must be included in the Plan.
	N	u. Conduct inspections during the intermediate grading and drainage BMP phase and during the final BMP phase of the project by the design professional who prepared the Plan in accordance with **Part IV.A.5** of the permit. The Plan must include a statement that the primary permittee must retain the design professional who prepared the Plan to conduct inspections during the intermediate grading and drainage BMP phase and during the final BMP phase.
	N	v. Install Post Construction BMPs (e.g., runoff reduction BMPs) which remove 80% TSS as outlined in the Georgia Stormwater Management Manual known as the Blue Book or an equivalent or more stringent design manual.

Effective January 1, 2025

* This requirement is different for infrastructure projects:
Certified personnel for primary permittees shall conduct inspections at least once every seven (7) calendar days and within 24 hours of the end of the storm that is 0.5 inches rainfall or greater in accordance with Part IV.D.4.a.(3)(a) – (c) of the permit.

GSWCC GEORGIA SOIL AND WATER CONSERVATION COMMISSION
Delmas S Crisp III
LEVEL II CERTIFIED DESIGN PROFESSIONAL
CERTIFICATION NUMBER: 0000100336
ISSUED: 11/08/2025 EXPIRES: 11/08/2028

1

EROSION, SEDIMENTATION & POLLUTION CONTROL PLAN CHECKLIST
STAND ALONE CONSTRUCTION PROJECTS
SWCD: HALL COUNTY

Project Name: GROUNDWATER WELLS #4 & #5 **Address:** 4745 ATLANTA HIGHWAY
City/County: HALL COUNTY, FLOWERY BRANCH, GA **Date on Plans:** OCT 2025
Name & email of person filling out checklist: DELMAS S. CRISP - trey.crisp@esgengineering.com

Plan Included Page #	Y/N	TO BE SHOWN ON ES&PC PLAN
C7.0	Y	1 The applicable Erosion, Sedimentation and Pollution Control Plan Checklist established by the Commission as of January 1 of the year in which the land-disturbing activity was permitted. (The completed Checklist must be submitted with the ES&PC Plan or the Plan will not be reviewed).
ALL	Y	2 Level II certification number issued by the Commission, signature and seal of the certified design professional. (Signature, seal and Level II number must be on each sheet pertaining to ES&PC plan or the Plan will not be reviewed).
C8.0	Y	3 Limits of disturbance shall

(4) **24-HOUR EMERGENCY CONTACT:**
TREY CRISP
PHONE: 478-335-4612

(5) **PRIMARY PERMITTEE:**

CITY OF FLOWERY BRANCH
5410 PINE STREET
FLOWERY BRANCH, GA 30542
PHONE: 770-967-6371

GSWCC GEORGIA SOIL AND WATER CONSERVATION COMMISSION

Delmas S Crisp III
LEVEL II CERTIFIED DESIGN PROFESSIONAL

CERTIFICATION NUMBER: 0000100336
ISSUED: 11/06/2025 EXPIRES: 11/06/2028

ES&PC NOTES:

(26) (27) 1. FOR BUILDING MATERIALS, BUILDING PRODUCTS, CONSTRUCTION WASTES, TRASH, LANDSCAPE MATERIALS, FERTILIZERS, PESTICIDES, HERBICIDES, DETERGENTS, SANITARY WASTE AND OTHER MATERIALS PRESENT ON THE SITE, PROVIDE COVER (E.G. PLASTIC SHEETING, TEMPORARY ROOFS) TO MINIMIZE THE EXPOSURE OF THESE PRODUCTS TO PRECIPITATION AND TO STORMWATER, OR A SIMILARLY EFFECTIVE MEANS DESIGNED TO MINIMIZE THE DISCHARGE OF POLLUTANTS FROM THESE AREAS. MINIMIZATION OF EXPOSURE TO PRECIPITATION AND TO STORMWATER WILL NOT RESULT IN A DISCHARGE OF POLLUTANTS, OR WHERE EXPOSURE OF A SPECIFIC MATERIAL OR PRODUCT POSES LITTLE RISK TO STORMWATER CONTAMINATION (SUCH AS FINAL PRODUCTS AND MATERIALS INTENDED FOR OUTDOOR USE).

(26) (27) 2. WASTE DISPOSAL. LOCATE WASTE COLLECTION AREAS AWAY FROM STREETS, GUTTERS, WATERCOURSES AND STORM DRAINS. WASTE COLLECTION AREAS, SUCH AS DUMPSTERS, ARE OFTEN BEST LOCATED NEAR CONSTRUCTION SITE ENTRANCES TO MINIMIZE TRAFFIC ON DISTURBED SOILS. THE CONTRACTOR SHOULD INCLUDE SECONDARY CONTAINMENT AROUND LIQUID WASTE COLLECTION AREAS TO FURTHER MINIMIZE THE LIKELIHOOD OF CONTAMINATED DISCHARGES. SOLID MATERIALS, INCLUDING BUILDING MATERIALS, SHALL NOT BE DISCHARGED TO WATERS OF THE STATE, EXCEPT AS AUTHORIZED BY A SECTION 404 PERMIT.

3. ALL PERMITEES ARE REQUIRED TO MINIMIZE THE DISCHARGE OF POLLUTANTS FROM DEWATERING TRENCHES AND EXCAVATIONS. DISCHARGES ARE PROHIBITS UNLESS MANAGED BY APPROPRIATE CONTROLS.

(25) 4. IF ANY PETROLEUM PRODUCTS ARE KEPT ON SITE, THEN THEY SHALL BE KEPT IN A SECURE AREA AND MONITORED DAILY FOR ANY SPILLS OR LEAKS AND NOTED IN THE SAME DAY IN THE DAILY REPORT.

(25) 5. IF ANY PETROLEUM OR HARMFUL PRODUCTS ENTERS STATE WATERS OR ANY TRANSPORTATION TO STATE WATERS OF ANY DISCERNIBLE AMOUNT, THE SPILL SHALL BE REPORTED TO THE DEPARTMENT OF NATURAL RESOURCES EMERGENCY OPERATION CENTER AT 1-800-424-8802.

(25) 6. IF ANY PETROLEUM OR HARMFUL PRODUCTS ARE STORED ON SITE THEN THEY SHALL BE PLACED AS FAR FROM WETLANDS, DRAINAGE DITCHES, STORMWATER SYSTEMS, AND OTHER ENVIRONMENTALLY SENSITIVE AREAS AS POSSIBLE TO PROVIDE AS MUCH PROTECTION AS POSSIBLE. THESE AREAS SHOULD BE SURROUNDED BY BERMS OR OTHER PROTECTIVE MEASURES TO ENSURE THE CAPTURE OF ANY MATERIAL SHOULD LEAKS OR SPILLS OCCUR.

7. STABILIZATION OF THE SITE DURING CONSTRUCTION WITH PERMANENT VEGETATION SUCH AS (Ds3 AND Ds4) WILL BE INSTALLED IN ACCORDANCE WITH THE GRASSING SCHEDULE TO OPTIMIZE GROWTH TO STABILIZE THE SITE ONCE CONSTRUCTION IS COMPLETE AND WILL CONTROL ANY POSSIBLE POLLUTANTS FROM THE SITE.

(9) 8. THE EXISTING CONDITIONS OF THE SITE CONTAINS SITE AMENITY IMPROVEMENTS. THE PROPOSED USE OF THE SITES ARE PASSIVE PARKS, WITH ASSOCIATED PAVING, SANITARY, STORM, AND OTHER UTILITY INFRASTRUCTURE.

(14) 9. THE DESIGN PROFESSIONAL WHO PREPARED THE ES&PC PLAN IS TO INSPECT THE INSTALLATION OF THE INITIAL SEDIMENT STORAGE REQUIREMENTS AND PERIMETER CONTROL BMPS WITHIN 7 DAYS AFTER INSTALLATION.

(15) 10. NON-EXEMPT ACTIVITIES SHALL NOT BE CONDUCTED WITHIN THE 25 OR 50-FOOT UNDISTURBED STREAM BUFFERS AS MEASURED FROM THE POINT OF WRESTED VEGETATION OR WITHIN 25-FEET OF THE COASTAL MARSHLAND BUFFER AS MEASURED FROM THE JURISDICTIONAL DETERMINATION LINE WITHOUT FIRST ACQUIRING THE NECESSARY VARIANCES AND PERMITS.

(17) 11. AMENDMENTS/REVISIONS TO THE ES&PC PLAN WHICH HAVE A SIGNIFICANT EFFECT ON BMPS WITH A HYDRAULIC COMPONENT MUST BE CERTIFIED BY THE DESIGN PROFESSIONAL.

(18) 12. WASTE MATERIALS SHALL NOT BE DISCHARGED TO WATERS OF THE STATE, EXCEPT AS AUTHORIZED BY A SECTION 404 PERMIT.

(19) 13. THE ESCAPE OF SEDIMENT FROM THE SITE SHALL BE PREVENTED BY THE INSTALLATION OF EROSION AND SEDIMENT CONTROL MEASURES AND PRACTICES PRIOR TO LAND DISTURBING ACTIVITIES.

(20) 14. EROSION CONTROL MEASURES WILL BE MAINTAINED AT ALL TIMES. IF FULL IMPLEMENTATION OF THE APPROVED PLAN DOES NOT PROVIDE FOR EFFECTIVE EROSION CONTROL, ADDITIONAL EROSION AND SEDIMENT CONTROL MEASURES SHALL BE IMPLEMENTED TO CONTROL OR TREAT THE SEDIMENT SOURCE.

(21) 15. ANY DISTURBED AREA LEFT EXPOSED FOR A PERIOD GREATER THAN 14 DAYS SHALL BE STABILIZED WITH MULCH OR TEMPORARY SEEDING.

(28) MITIGATION OF SITE POLLUTANTS

NAME OF POLLUTANT	MITIGATION METHOD/BMP
SEDIMENT	CONSTRUCTION EXIT
	SILT FENCE
	INLET PROTECTION
	MULCH/GRASSING
PETROLEUM PRODUCTS	SEE ES&PC NOTES ON THIS SHEET
BUILDING MATERIALS	SEE ES&PC NOTES ON THIS SHEET
CONCRETE	SEE INTERMEDIATE EROSION AND SEDIMENTATION CONTROL NOTES

ANTICIPATED START DATE: 01/01/2025
ANTICIPATED END DATE: 07/01/2025

(29) ESPC PHASING SCHEDULE

DURATION	MONTH 1	MONTH 2	MONTH 3	MONTH 4	MONTH 5	MONTH 6
INSTALLATION & MAINTENANCE OF INITIAL BMPS	■	■	■	■	■	■
CLEARING & GRUBBING	■					
INSTALLATION & MAINTENANCE OF INTERMEDIATE BMPS		■	■	■	■	■
GRADING, STORMWATER, & UTILITY INSTALLATION		■	■	■	■	
BUILDING CONSTRUCTION		■	■	■	■	
FINAL GRADING, PAVING, & FINAL BMP INSTALLATION						■
REMOVAL OF ALL TEMPORARY BMPS						■

(34) **APPENDIX B RATIONALE FOR NTU MONITORING:**

MEASURED/SAMPLED UPSTREAM & DOWNSTREAM NTU VALUES SHALL NOT INCREASE BY MORE THAN 25 NTU AT ANY POINT THROUGHOUT THE DURATION OF THE PROJECT AND THE COMPLETION OF ALL CONSTRUCTION ACTIVITIES.

(7)

GROUNDWATER WELLS #4 & #5

FOR THE

CITY OF FLOWERY BRANCH
HALL COUNTY, GA

4'

PROJECT SITE
4745 ATLANTA HIGHWAY
FLOWERY BRANCH, GA 30542

E&S CONTACT PERSON:
TREY CRISP
478-335-4612
TCRISP@ESGENGINEERING.COM
ESG ENGINEERING, LLC
6400 PEAKE RD
MACON, GA 31210

PRIMARY PERMITTEE: CITY OF FLOWERY BRANCH, GA
HOSTED WEBSITE TO VIEW PLANS*:
[*INSERT WEB ADDRESS HERE*]

**SIGN MUST REMAIN POSTED ON SITE AND PLAN AVAILABLE ON THE PROVIDED WEBSITE UNTIL A N.O.T. HAS BEEN SUBMITTED.*

8'

ES & PC SIGN DETAIL

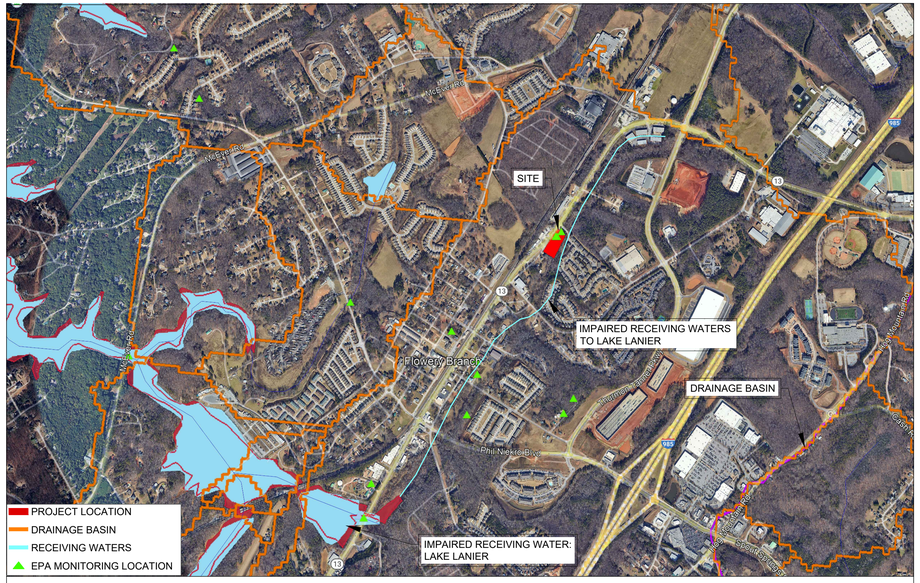

(11) RECEIVING WATERS AND IMPAIRED STREAM MAP

ESG ENGINEERING
6400 Peake Rd
Macon, GA 31210
Ph: (478) 474-4996
Fax: (478) 474-5045

GROUNDWATER WELLS #4 & #5

FOR THE

CITY OF FLOWERY BRANCH

REVISIONS

NO	DESCRIPTION	DATE
1	ESPC SHEETS	11-7-25
2	BID SET OF PLANS	12-1-25
3	REVISED WITH CITY COMMENTS	12-5-25
4	ADDENDUM #1	12-8-25
5	ADDENDUM #2	12-11-25
6	ADDENDUM #3	12-12-25
7	REVISED WITH CITY COMMENTS	12-17-25

CONFORMED SET

GEORGIA REGISTERED PROFESSIONAL ENGINEER
No. PE046341
ANDREW D SWICEGOOD

DRAWN BY: DSC
CHECKED BY: ADS
DATE: OCT 2025
SCALE: N.T.S.

CONTENT:

EROSION, SEDIMENTATION, AND POLLUTION CONTROL PLAN DETAILS

SHEET NO: 3 7

C7.1

Co

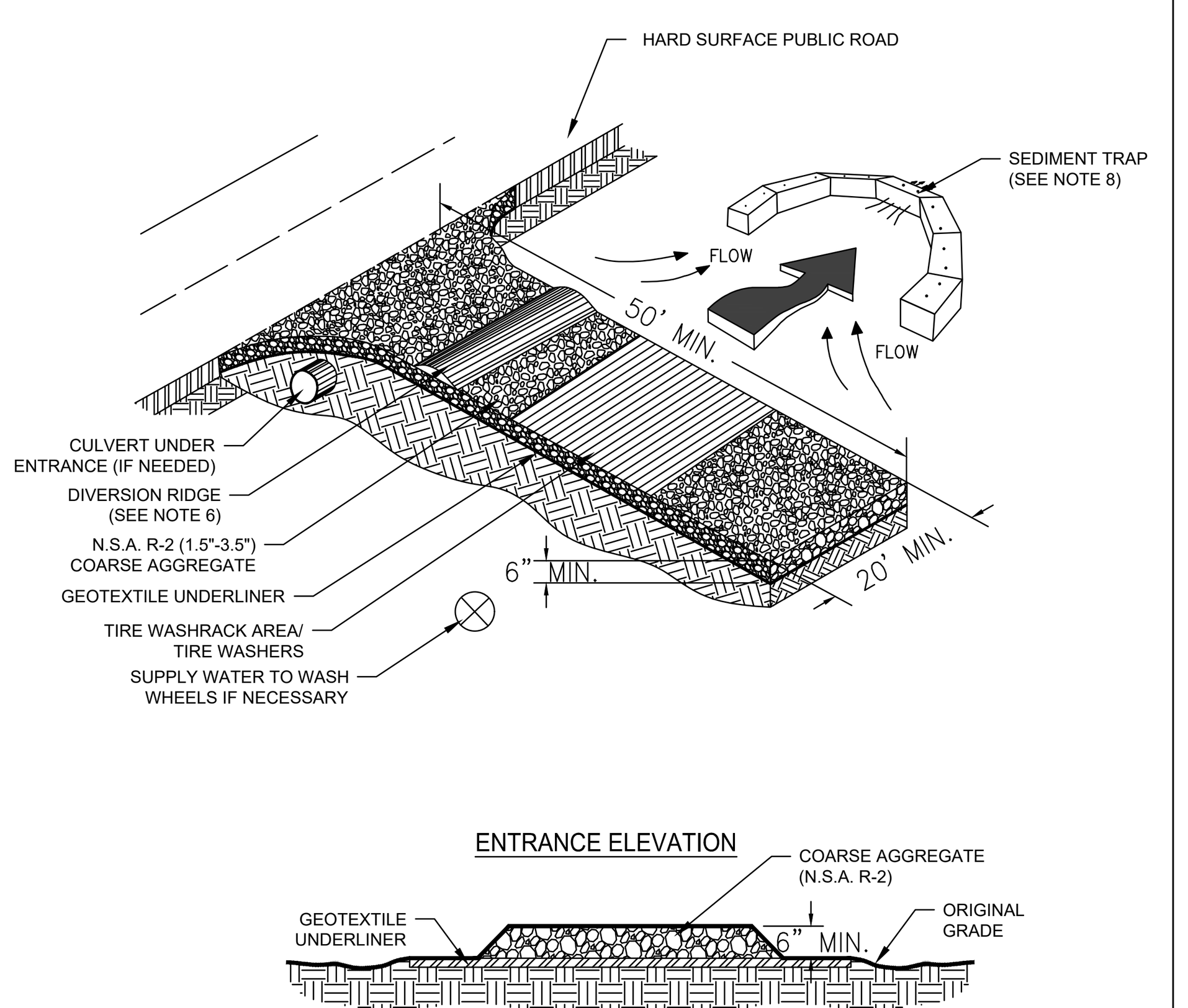

CONSTRUCTION EXIT
NOT TO SCALE
51

CWA CONCRETE WASHOUT AREA

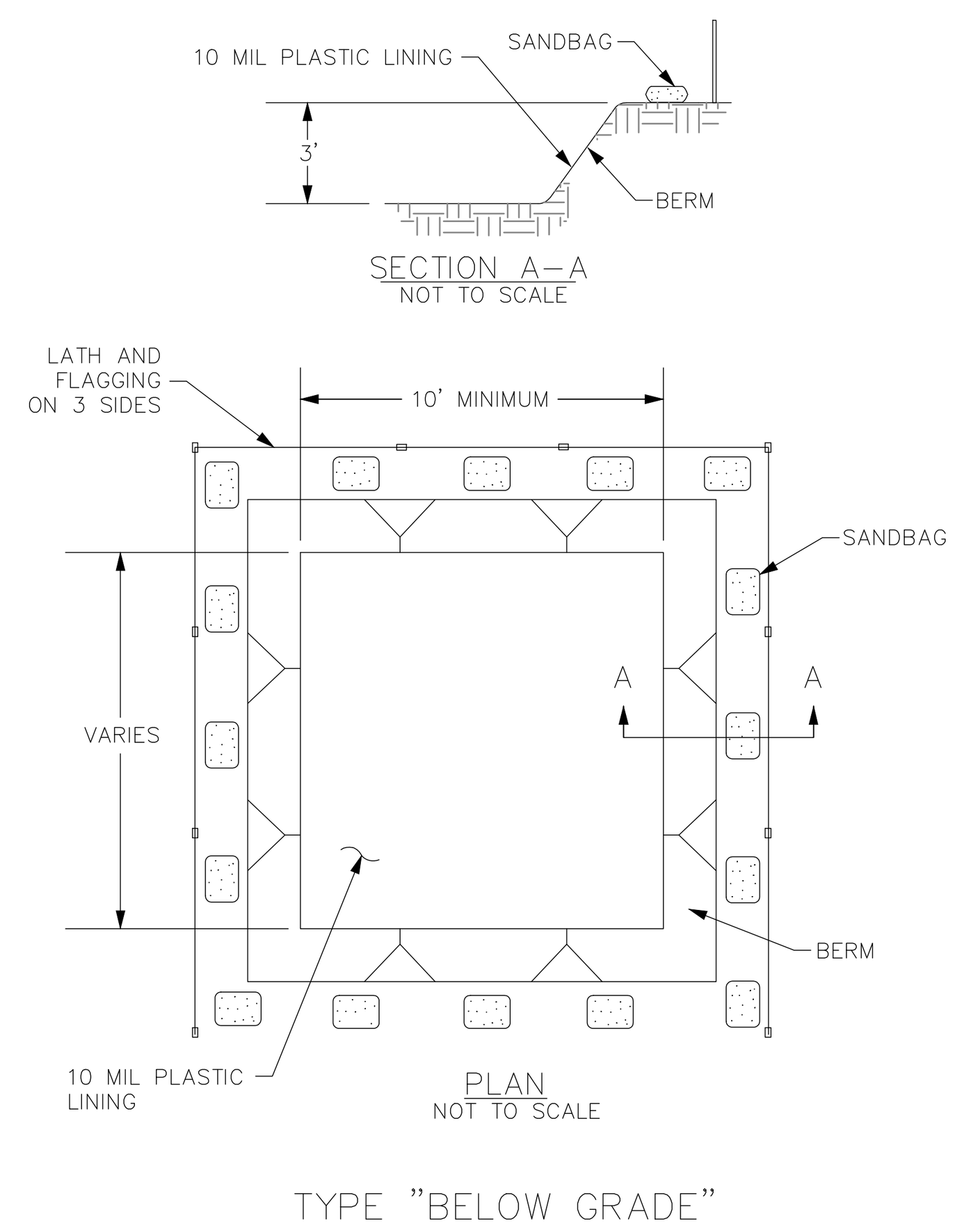

CONCRETE WASHOUT AREA
NOT TO SCALE
24

Sd1 SILT FENCE - TYPE A & C

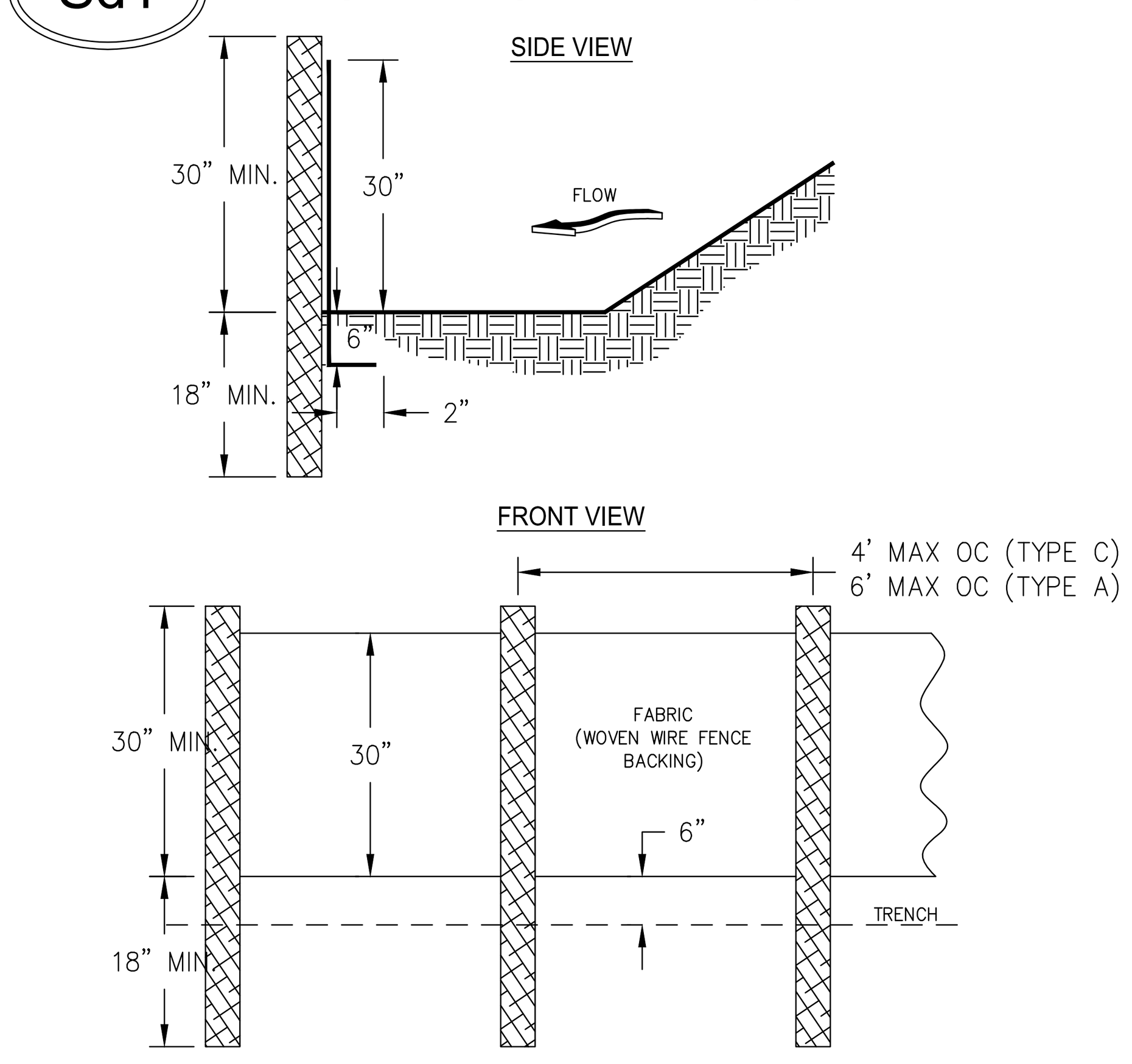

NOTES:
1. USE STEEL OR WOOD POSTS OR AS SPECIFIED BY THE EROSION, SEDIMENTATION, AND POLLUTION CONTROL PLAN.
2. HEIGHT (*) IS TO BE SHOWN ON THE EROSION, SEDIMENTATION, AND POLLUTION CONTROL PLAN.

SILT FENCE (SENSITIVE & NON-SENSITIVE)
NOT TO SCALE

FASTENERS FOR SILT FENCES

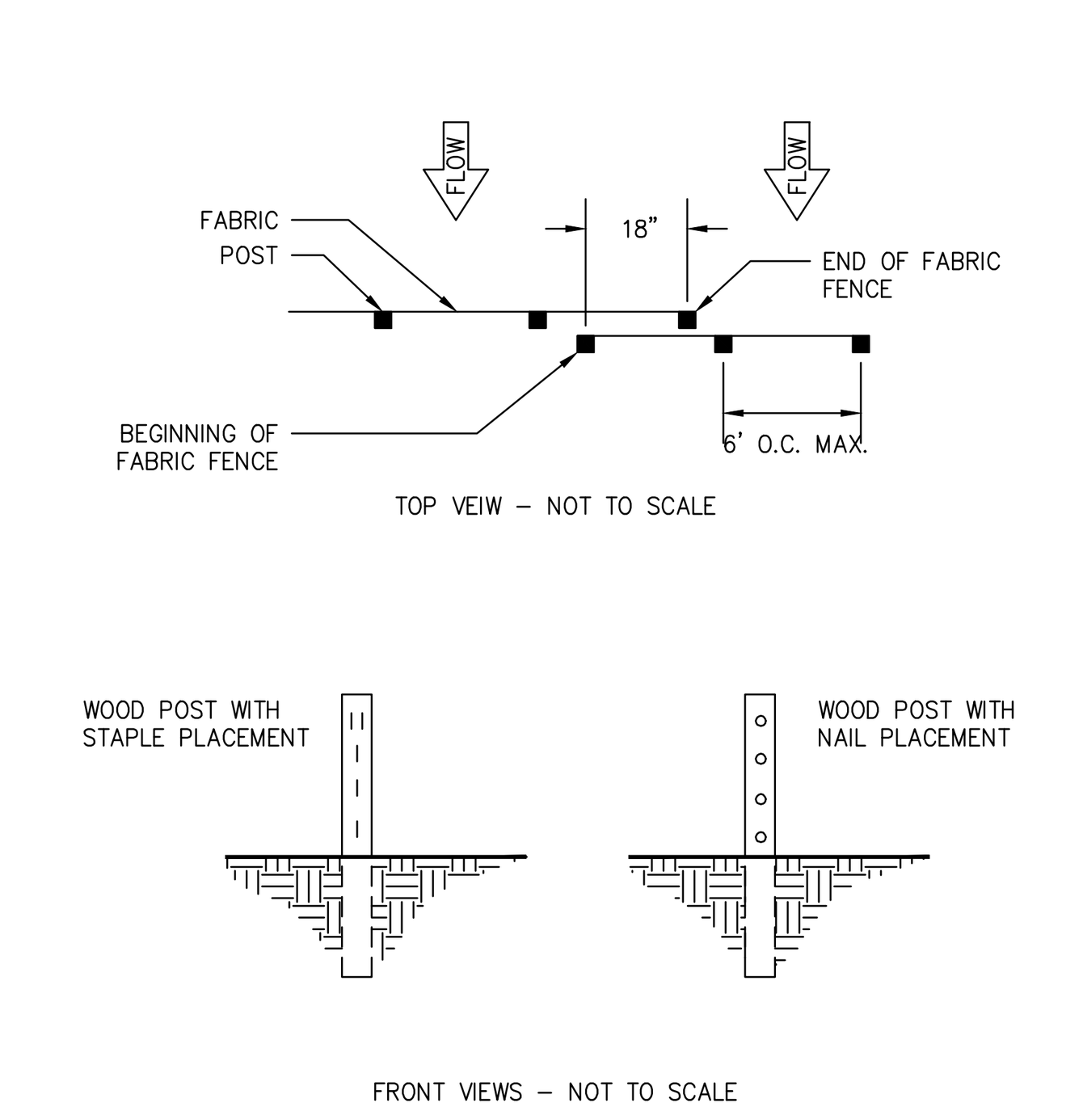

NOTES:
1. THE FABRIC AND WIRE SHOULD BE SECURELY FASTENED TO POSTS AND FABRIC ENDS MUST BE OVERLAPPED A MINIMUM OF 18" OR WRAPPED TOGETHER AROUND A POST TO PROVIDE A CONTINUOUS FABRIC BARRIER AROUND THE INLET.

FASTENERS FOR SILT FENCES
NOT TO SCALE

Ds2 DISTURBED AREA STABILIZATION (WITH TEMPORARY SEEDING)

DEFINITION

The establishment of temporary vegetative cover with fast growing seedings for seasonal protection on disturbed or denuded areas.

CONDITIONS

Temporary grassing, instead of mulch, can be applied to rough graded areas that will be exposed for less than six months. Temporary vegetative measures should be coordinated with permanent measures to assure economical and effective stabilization. Most types of temporary vegetation are ideal to use as companion crops until the permanent vegetation is established.
eeded.

SEEDING RATES FOR TEMPORARY SEEDING

SPECIES	RATE Per 1,000 sq.ft.	RATE Per Acre *	PLANTING DATES **
Rye	3.9 pounds	3 bu.	9/1-3/1
Ryegrass	0.9 pound	40 lbs.	8/15-4/1
Annual Lespedeza	0.9 pound	40 lbs.	1/15-3/15
Weeping Lovegrass	0.1 pound	4 lbs.	2/15-6/15
Sudangrass	1.4 pounds	60 lbs.	3/1-8/1
Browntop Millet	0.9 pound	40 lbs.	4/1-7/15
Wheat	4.1 pounds	3 bu.	9/15-2/1

* Unusual site conditions may require heavier seeding rates
** Seeding dates may need to be altered to fit temperture variations and conditions.

Ds2 DISTURBED AREA STABILIZATION (WITH TEMPORARY SEEDING)

SPECIFICATIONS

Grading and Shaping

Excessive water run-off shall be reduced by properly designed and installed erosion control practices such as closed drains, ditches, dikes, diversions, sediment barriers and others.

No shaping or grading is required if slopes can be stabilized by hand-seeded vegetation or if hydraulic seeding equipment is to be used.

Seedbed Preparation

When a hydraulic seeder is used, seedbed preparation is not required. When using conventional or handseeding, seedbed preparation is not required if the soil material is loose and not sealed by rainfall.

When soil has been sealed by rainfall or consists of smooth cut slopes, the soil shall be pitted, trenched or otherwise scarified to provide a place for seed to lodge and germinate.

Lime and Fertilizer

Agricultural lime is required unless soil tests indicate otherwise. Apply agricultural lime at a rate of one ton per acre. Graded areas require lime application. Soils can be tested to determine if fertilizer is needed. On reasonably fertile soils or soil material, fertilizer is not required. For soils with very low fertility, 500 to 700 pounds of 10-10-10 fertilizer or the equivalent per acre (12-16 lbs./1,000 sq. ft.) shall be applied. Fertilizer should be applied before land preparation and incorporated with a disk, ripper or chisel.

Seeding

Select a grass or grass-legume mixture suitable to the area and season of the year. Seed shall be applied uniformly by hand, cyclone seeder, drill, cultipacker seeder, or hydraulic seeder (slurry including seed and fertilizer). Drill or cultipacker seeders should normally place seed one-quarter to one-half inch deep. Appropriate depth of planting is ten times the seed diameter. Soil should be "raked" lightly to cover seed with soil if seeded by hand.

Mulching

Temporary vegetation can, in most cases, be established without the use of mulch. Mulch without seeding should be considered for short term protection. Refer to Ds1 - Disturbed Area Stabilization (With Mulching Only).

Irrigation

During times of drought, water shall be applied at a rate not causing runoff and erosion. The soil shall be thoroughly wetted to a depth that will insure germination of the seed. Subsequent applications should be made when needed.

DISTURBED AREA STABILIZATION TEMPORARY SEEDING
NOT TO SCALE

Ds3 DISTURBED AREA STABILIZATION (WITH PERMANENT VEGETATION)

DEFINITION

The planting of perennial vegetation such as trees, shrubs, vines, grasses, or legumes on exposed areas for final permanent stabilization. Permanent perennial vegetation shall be used to achieve final stabilization..

CONDITIONS

Permanent perennial vegetation is used to provide a protective cover for exposed areas including cuts, fills, dams, and other denuded areas.

SPECIFICATIONS

Grading and Shaping

Grading and shaping may not be required where hydraulic seeding and fertilizing equipment is to be used. Vertical banks shall be sloped to enable plant establishment.

When conventional seeding and fertilizing are to be done, grade and shape where feasible and practical, so that equipment can be used safely and efficiently during seedbed preparation, seeding, mulching and maintenance of the vegetation.

oncentrations of water that will cause excessive soil erosion shall be diverted to a safe outlet. Diversions and other treatment practices shall conform with the appropriate standards and specifications.

Seedbed Preparation

Seedbed preparation may not be required where hydraulic seeding and fertilizing equipment is to be used. When conventional seeding is to be used, seedbed preparation will be done as follows:

Broadcast plantings

1. Tillage at a minimum, shall adequately loosen the soil to a depth of 4 to 6 inches; alleviate compaction; incorporate lime and fertilizer; smooth and firm the soil; allow for the proper placement of seed, sprigs, or plants; and allow for the anchoring of straw or hay mulch if a disk is to be used.
2. Tillage may be done with any suitable equipment.
3. Tillage should be done on the contour where feasible.
4. On slopes too steep for the safe operation of tillage equipment, the soil surface shall be pitted or trenched across the slope with appropriate hand tools to provide two places 6 to 8 inches apart in which seed may lodge and germinate. Hydraulic seeding may also be used.

Individual Plants

1. Where individual plants are to be set, the soil shall be prepared by excavating holes, opening furrows, or dibble planting.
2. For nursery stock plants, holes shall be large enough to accommodate roots without crowding.
3. Where pine seedlings are to be planted, subsoil under the row 36 inches deep on the contour four to six months prior to planting. Subsoiling should be done when the soil is dry, preferably in August or September.

Lime and Fertilizer Rates and Analysis

Agricultural lime is required at the rate of one to two tons per acre unless soil tests indicate otherwise. Graded areas require lime application. If lime is applied within six months of planting permanent perennial vegetation, additional lime is not required. Agricultural lime shall be within the specifications of the Georgia Department of Agriculture.

Lime spread by conventional equipment shall be "ground limestone." Ground limestone is calcitic or dolomitic limestone ground so that 90 percent of the material will pass through a 10-mesh sieve, not less than 50 percent will pass through a 50-mesh sieve and not less than 25 percent will pass through a 100-mesh sieve.

Fast-acting lime spread by hydraulic seeding equipment should be "finely ground limestone" spanning from the 180 micron size to the 5 micron size. Finely ground limestone is calcitic or dolomitic limestone ground so that 95 percent of the material will pass through a 100-mesh sieve.

It is desirable to use dolomitic limestone in the Sand Hills, Southern Coastal Plain and Atlantic Coast Flatwoods MLRAs. (See Figure 6-4.1)

Agricultural lime is generally not required where only trees are planted.

Initial fertilization, nitrogen, topdressing, and maintenance fertilizer requirements for each species or combination of species are listed in Table 6-5.1.

Lime and Fertilizer Application

When hydraulic seeding equipment is used, the initial fertilizer shall be mixed with seed, innoculant (if needed), and wood cellulose or wood pulp fiber mulch and applied in a slurry. The innoculant, if needed, shall be mixed with the seed prior to being placed into the hydraulic seeder. The slurry mixture will be agitated during application to keep the ingredients thoroughly mixed. The mixture will be spread uniformly over the area within one hour after being placed in the hydroseeder.

Finely ground limestone can be applied in the mulch slurry or in combination with the top dressing.

When conventional planting is to be done, lime and fertilizer shall be applied uniformly in one of the following ways:

1. Apply before land preparation so that it will be mixed with the soil during seedbed preparation.

2. Mix with the soil used to fill the holes, distribute in furrows.

3. Broadcast after steep surfaces are scarified, pitted or trenched.

4. A fertilizer pellet shall be placed at root depth in the closing hole beside each pine tree seedling.

Planting

Hydraulic Seeding

Mix the seed (innoculated if needed), fertilizer, and wood cellulose or wood pulp fiber mulch with water and apply in a slurry uniformly over the area to be treated. Apply within one hour after the mixture is made.

Conventional Seeding

Seeding will be done on a freshly prepared and firmed seedbed. For broadcast planting, use a cultipacker seeder, drill, rotary seeder, other mechanical seeder, or hand seeding to distribute the seed uniformly over the area to be treated. Cover the seed lightly with 1/8 to 1/4 inch of soil for small seed and 1/2 to 1 inch for large seed when using a cultipacker or other suitable equipment.

No-Till Seeding

No-till seeding is permissible into annual cover crops when planting is done following maturity of the cover crop or if the temporary cover stand is sparse enough to allow adequate growth of the permanent (perennial) species. No-till seeding shall be done with appropriate no-till seeding equipment. The seed must be uniformly distributed and planted at the proper depth.

Individual Plants

Shrubs, vines and sprigs may be planted with appropriate planters or hand tools. Pine trees shall be planted manually in the subsoil furrow. Each plant shall be set in a manner that will avoid crowding the roots. Nursery stock plants shall be planted at the same depth or slightly deeper than they grew at the nursery. The tips of vines and sprigs must be at or slightly above the ground surface. Where individual holes are dug, fertilizer shall be placed in the bottom of the hole, two inches of soil shall be added and the plant shall be set in the hole.

Mulching

Mulch is required for all permanent vegetation applications. Mulch applied to seeded areas shall achieve 75% soil cover. Select the mulching material from the following and apply as indicated:

1. Dry straw or dry hay of good quality and free of weed seeds can be used. Dry straw shall be applied at the rate of 2 tons per acre. Dry hay shall be applied at a rate of 2 1/2 tons per acre.
2. Wood cellulose mulch or wood pulp fiber shall be used with hydraulic seeding. It shall be applied at the rate of 500 pounds per acre. Drystraw or dry hay shall be applied (at the rate indicated above) after hydraulic seeding.
3. One thousand pounds of wood cellulose or wood pulp fiber, which includes a tackifier, shall be used with hydraulic seeding on slopes 3/4:1 or steeper.
4. Sericea lespedeza hay containing mature seed shall be applied at a rate of three tons per acre.
5. Pine straw or pine bark shall be applied at a thickness of 3 inches for bedding purposes. Other suitable materials in sufficient quantity may be used where ornamentals or other ground covers are planted. This is not appropriate for seeded areas.
6. When using temporary erosion control blankets or block sod, mulch is not required.
7. Bituminous treated roving may be applied on planted areas on slopes, in ditches or dry waterways to prevent erosion. Bituminous treated roving shall be applied within 24 hours after an area has been planted. Application rates and materials must meet Georgia Department of Transportation specifications.

Wood cellulose and wood pulp fibers shall not contain germination or growth inhibiting factors. They shall be evenly dispersed when agitated in water. The fibers shall contain a dye to allow visual metering and aid in uniform application during seeding.

Applying Mulch

Straw or hay mulch will be spread uniformly within 24 hours after seeding and/or planting. The mulch may be spread by blower-type spreading equipment, other spreading equipment or by hand. Mulch shall be applied to cover 75% of the soil surface.

Wood cellulose or wood fiber mulch shall be applied uniformly with hydraulic seeding equipment.

Anchoring Mulch

Anchor straw or hay mulch immediately after application by one of the following methods:
1. Emulsified asphalt can be (a) sprayed uniformly onto the mulch as it is ejected from the blower machine or (b) sprayed on the mulch immediately following mulch application when straw or hay is spread by methods other than special blower equipment.

The combination of asphalt emulsion and water shall consist of a homogeneous mixture satisfactory for spraying. The mixture shall consist of 100 gallons of grade SS-1h or CSS-1h emulsified asphalt and 100 gallons of water per ton of mulch.
Care shall be taken at all times to protect state waters, the public, adjacent property, pavements, curbs, sidewalks, and all other structures from asphalt discoloration.
2. Hay and straw mulch shall be pressed into the soil immediately after the mulch is spread. A special "packer disk" or disk harrow with the disks set straight may be used. The disks may be smooth or serrated and should be 20 inches or more in diameter and 8 to 12 inches apart. The edges of the disks shall be dull enough to press the mulch into the ground without cutting it, leaving much of it in an erect position. Mulch shall not be plowed into the soil.
3. Synthetic tackifiers or binders approved by DOT shall be applied in conjunction with or immediately after the mulch is spread. Synthetic tackifiers shall be mixed and applied according to manufacturer's specifications. Refer to Tb - Tackifiers and Binders.
4. Rye or wheat can be included with Fall and Winter plantings to stabilize the mulch. They shall be applied at a rate of one-quarter to one half bushel per acre.
5. Plastic mesh or netting with mesh no larger than one inch by one inch may be needed to anchor straw or hay mulch on unstable soils and concentrated flow areas. These materials shall be installed and anchored according to manufacturer's specifications.

Irrigation

Irrigation shall be applied at a rate that will not cause runoff.

SEEDING RATES FOR PERMANENT SEEDING

SPECIES	RATE Per 1,000 sq.ft.	RATE Per Acre *	PLANTING DATES **
BAHIA	1.4 POUNDS	60 LBS.	1/1-12/31
BERMUDA	0.2 POUND	10 LBS.	2/15-7/1
CENTIPEDE	BLOCK SOD ONLY	BLOCK SOD ONLY	4/1-7/1
LESPEDEZA	1.7 POUNDS	75 LBS.	1/1-12/31
WEEPING LOVE GRASS	0.1 POUND	4 LBS.	2/1-6/15
SWITCH GRASS	0.9 POUND	40 LBS.	3/15-6/1

* Unusual site conditions may require heavier seeding rates
** Seeding dates may need to be altered to fit temperature variations and conditions.

DISTURBED AREA STABILIZATION PERMANENT VEGETATION
NOT TO SCALE
52

Ds4 DISTURBED AREA STABILIZATION (WITH SODDING)

DEFINITION

A permanent vegetation using sods on highly erodible or critically eroded lands.

CONDITIONS

This application is appropriate for areas which require immediate vegetative covers, drop inlets, grass swales, and waterways with intermittent flow .

CONSTRUCTION SPECIFICATIONS INSTALLATION

Soil Preparation

- Bring soil surface to final grade. Clear surface of trash, woody debris, stones and clods larger than 1". Apply sod to soil surfaces only and not frozen surfaces, or gravel type soils.
- Topsoil properly applied will help guarantee stand. Don't use topsoil recently treated with herbicides or soil sterilants.
- Mix fertilizer into soil surface. Fertilize based on soil tests or Table 6-6.1. For fall planting of warm season species, half the fertilizer should be applied at planting and the other half in the spring.

Table 6-6.1. Fertilizer Requirements for Soil Surface Application

Fertilizer Type (lbs./acre)	Fertilizer Rate (lbs./acre)	Fertilizer Rate	Season
10-10-10	1000	.025	Fall

- Agricultural lime should be applied based on soil tests or at a rate of 1 to 2 tons per acre.

Installation

- Lay sod with tight joints and in straight lines. Don't overlap joints. Stagger joints and do not stretch sod.
- On slopes steeper than 3:1, sod should be anchored with wooden or biodegradable pins or other approved methods.
- Installed sod should be rolled or tamped to provide good contact between sod and soil.
- Irrigate sod and soil to a depth of 4" immediately after installation.
- Sod should not be cut or spread in extremely wet or dry weather.
- Irrigation should be used to supplement rainfall for a minimum of 2-3 weeks.

MATERIALS

- Sod selected should be certified. Sod grown in the general area of the project is desirable.
- Sod should be machine cut and contain 3/4" ±1/4" of soil, not including shoots or thatch.
- Sod should be cut to the desired size within ±5%. Torn or uneven pads should be rejected.
- Sod should be cut and installed within 36 hours of digging.
- Avoid planting when subject to frost heave or hot weather if irrigation is not available.
- The sod type should be shown on the plans or installed according to Table 6-6.2. See Figure 6-4.1 for your Resource Area.

Table 6-6.2. Sod Planting Requirements

Grass	Varieties	Resource Area	Growing Season
Bermudagrass	Common Tifway Tifgreen Tiflawn	M-L,P,C P,C P,C P,C	Warm Weather
Bahiagrass	Pensacola	P,C	Warm Weather
Centipede	-	P,C	Warm Weather
St. Augustine	Common Bitterblue Raleigh	C	Warm Weather
Zoysia	Emerald Myer	P,C	Warm Weather
Tall Fescue	Kentucky	M-L,P	Cool Weather

MAINTENANCE

- Re-sod areas where an adequate stand of sod is not obtained.
- New sod should be mowed sparingly. Grass height should not be cut less than 2"-3" or as specified.
- Apply one ton of agricultural lime as indicated by soil test or every 4-6 years.
- Fertilize grasses in accordance with soil tests or Table 6-6.3.

Table 6-6.3. Fertilizer Requirements for Sod

Types of Species	Planting Year	Fertilizer (N-P-K)	Rate (lbs./acre)	Nitrogen Top Dressing Rate (lbs./acre)
Cool Season Grasses	First Second Maintenance	6-12-12 6-12-12 10-10-10	1500 1000 400	50-100 - 30
Warm Season Grasses	First Second Maintenance	6-12-12 6-12-12 10-10-10	1500 800 400	50-100 50-100 30

DISTURBED AREA STABILIZATION SODDING
NOT TO SCALE

Du DUST CONTROL ON DISTURBED AREAS

DEFINITION

Controlling surface and air movement of dust on construction sites, roads, and demolition sites.

CONDITIONS

This practice is applicable to areas subject to surface and air movement of dust where on and off-site damage may occur without treatment.

METHOD AND MATERIALS

A. TEMPORARY METHODS

Mulches. See standard Ds1 - Disturbed Area Stabilization (With Mulching Only). Synthetic resins may be used instead of asphalt to bind mulch material. Refer to standard Tb-Tackifiers and Binders. Resins such as Curasol or Terratack should be used according to manufacturer's recommendations.

Vegetative Cover. See standard Ds2 - Disturbed Area Stabilization (With Temporary Seeding).

Spray-on Adhesives. These are used on mineral soils (not effective on muck soils). Keep traffic off these areas. Refer to standard Tb-Tackifiers and Binders.

Tillage. This practice is designed to roughen and bring clods to the surface. It is an emergency measure which should be used before wind erosion starts. Begin plowing on windward side of site. Chisel-type plows spaced about 12 inches apart, spring-toothed harrows, and similar plows are examples of equipment which may produce the desired effect.

Irrigation. This is generally done as an emergency treatment. Site is sprinkled with water until the surface is wet. Repeat as needed.

Barriers. Solid board fences, snow fences, burlap fences, crate walls, bales of hay and similar material can be used to control air currents and soil blowing. Barriers placed at right angles to prevailing currents at intervals of about 15 times their height are effective in controlling wind erosion.

Calcium Chloride. Apply at rate that will keep surface moist. May need retreatment.

B. PERMANENT METHODS

Permanent Vegetation. See standard Ds3 -Disturbed Area Stabilization (With Permanent Vegetation). Existing trees and large shrubs may afford valuable
protection if left in place.

Topsoiling. This entails covering the surface with less erosive soil material. See standard Tp - Topsoiling.

Stone. Cover surface with crushed stone or coarse gravel. See standard Cr-Construction Road Stabilization.

DUST CONTROL ON DISTURBED AREA
NOT TO SCALE

Cd-Hb TYPICAL STRAW BALE CHECK DAM

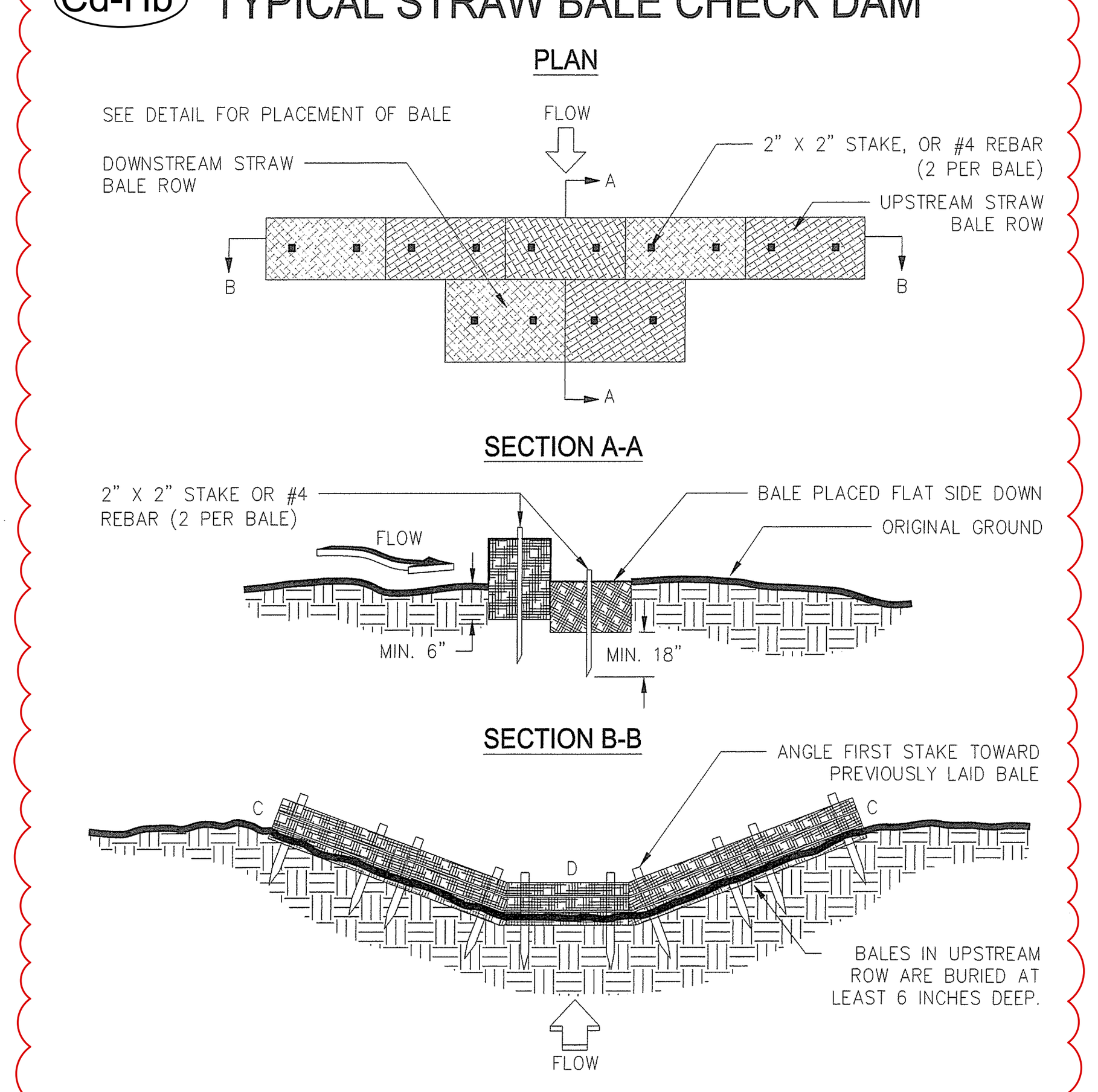

NOTES:
1. BALES SHOULD BE BOUND WITH WIRE OR NYLON STRING AND SHOULD BE PLACED IN ROWS WITH BALE ENDS TIGHTLY ABUTTING THE ADJACENT BALES.
2. REMOVE #4 REBAR AFTER STRAW BALES ARE NO LONGER IN PLACE.
3. POINT C OF SECTION B–B SHOULD ALWAYS BE HIGHER THAN POINT D.

Ss

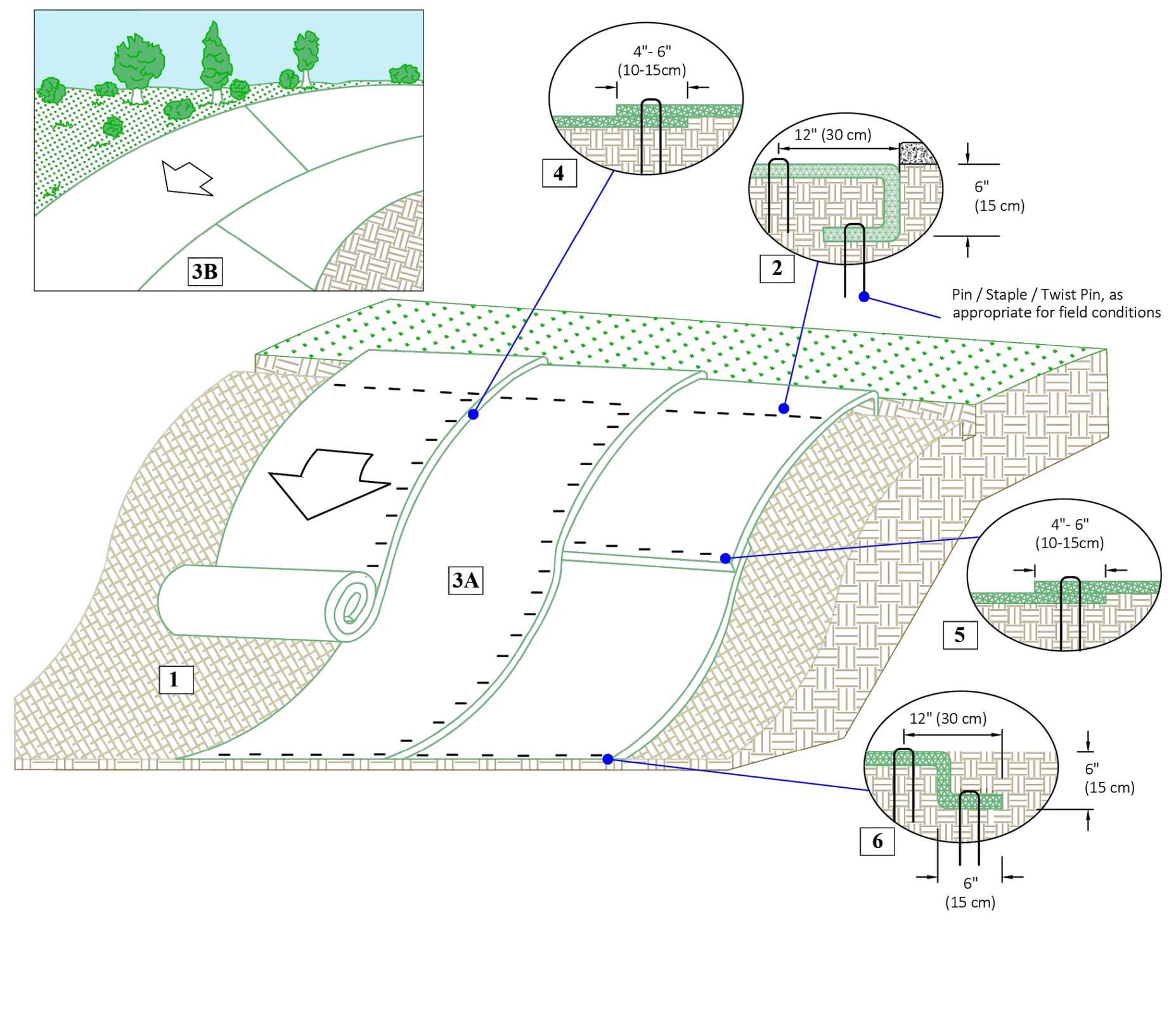

Instructions

1. Prepare soil before installing rolled erosion control products (RECPs), including any necessary application of lime, fertilizer, and seed. Ground surface must be free of debris, rocks, clay clods and raked smooth sufficient to allow intimate contact of the RECP with the soil over the entirety of the installation.
2. Begin at the top of the slope by anchoring the RECPs in a 6" (15 cm) deep X 6" (15 cm) wide trench. Anchor the RECPs with a row of staples/stakes/pins spaced at S_T apart in the bottom of the trench. Backfill and compact the trench after stapling and fold the roll over downslope. Secure RECPs over compacted soil with a row of staples/stakes/pins spaced at S_T apart across the width of the RECPs.
3. Roll the RECPs (A) down or (B) horizontally across the slope. When laying RECPs horizontal, a maximum of two roll widths or 16 feet, whichever is less, may be applied up the slope. If two roll widths or 16 ft is insufficient to cover the slope, material shall be placed vertically. RECPs will unroll with appropriate side against the soil surface. All RECPs must be securely fastened to soil surface by placing staples/stakes/pins in appropriate locations as shown in the staple pattern guide. RollMax RECPs and ECBs should utilize Staple Pattern C, TRMs and VMax materials should utilize Staple Pattern D.
4. The edges of parallel RECPs must be stapled with approximately 4" - 6" (10 - 15 cm) overlap.
5. Consecutive RECPs spliced down the slope must overlapped with the upstream mat atop the downstream mat (shingle style). The overlap should be 4" - 6" (10 - 15 cm).
6. At the terminal end, secure each mat across the width with a row of staples/stakes/pins spaced at S_T. If exposed to flow, foot traffic, wind uplift or other disruption, trench the terminal end in as shown in detail.
7. Fasteners should provide a minimum of twenty pounds of pullout resistance. Six-inch (10 cm) X one-inch (2.5 cm) eleven gauge staples are typically adequate. In loose soils, longer staples may be necessary, twist pins can provide the greatest pullout resistance. In hard or rocky soils, straight pins may be used where staples or twist pins are refused, provided the minimum pullout requirements are met. Bio-degradable fasteners shall not be used with TRM or HPTRM materials.

Staple Pattern Guide

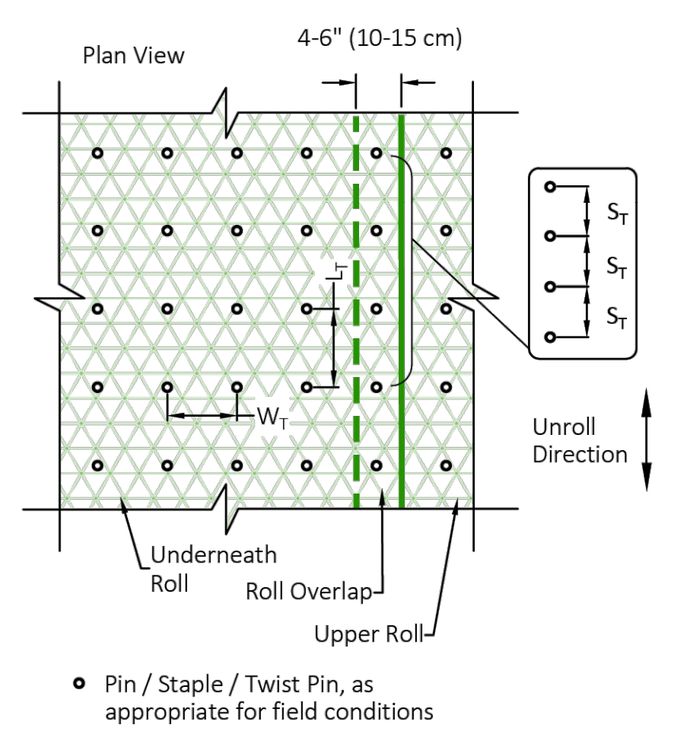

Pin / Staple / Twist Pin, as appropriate for field conditions

Dimension	Staple Pattern C	Staple Pattern D
W_T	30" (75 cm)	22" (55 cm)
L_T	30" (75 cm)	22" (55 cm)
S_T	18" (45 cm)	18" (45 cm)
Nominal Frequency	1.7 / SY	3.0 / SY
Application	ECB (Degradable)	TRM (Permanent)
Required Fastener	Min. 20# pullout	Min. 20# pullout

*Note: Staple Pattern A and B used prior to 8/2019 have been discontinued.

WESTERN GREEN | WESTERN EXCELSIOR CORPORATION | EAST COAST erosion control | NORTH AMERICAN GREEN

Project: Standard Slope/Rainfall Layout - ECB or TRM

Shown: Isometric View of Slope, Fastener Placement, Some Fasteners and Vegetation Omitted for Clarity, Trenching and Overlap, NTS

Date: 4/19/2022
WG: 886-540-9810
www.westerngreen.com
www.westernexcelsior.com
www.nagreen.com

SLOPE STABILIZATION
NOT TO SCALE

INLET SEDIMENT TRAP

SOD STRIPS PROTECT INLET AREA FROM EROSION
(SOURCE: VA SWCC)

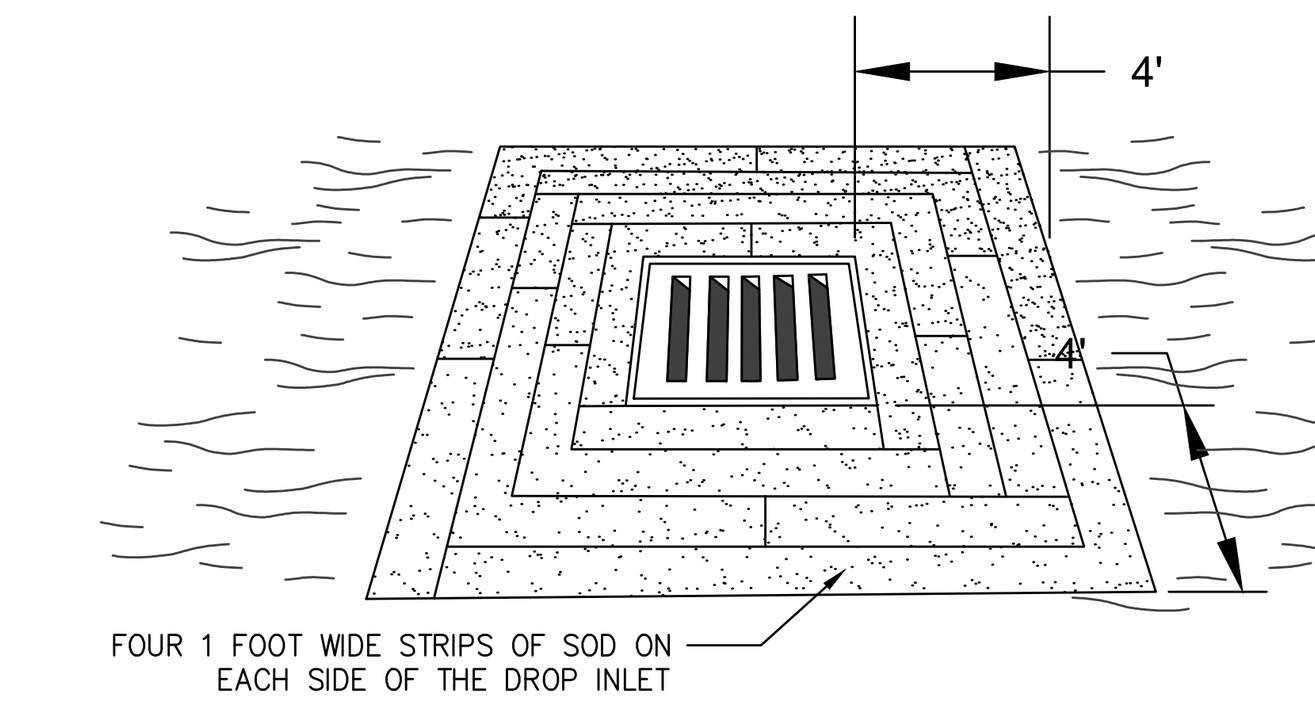

GSWCC GEORGIA SOIL AND WATER CONSERVATION COMMISSION
Delmas S Crisp III
LEVEL II CERTIFIED DESIGN PROFESSIONAL
CERTIFICATION NUMBER: 0000100336
ISSUED: 11/08/2025 EXPIRES: 11/08/2028

INLET SEDIMENT TRAP (SD2)
NOT TO SCALE

Ds1 DISTURBED AREA STABILIZATION (WITH MULCHING ONLY)

DEFINITION

Applying plant residues or other sutiable materials, produced on the site if possible, to the soil surface.

CONDITIONS

Mulch or temporary grassing shall be applied to all exposed areas within 14 days of disturbance. Mulch can be used as a singular erosion control device for up to six months, but it shall be applied at the appropriate depth, depending on the material used, anchored, and have a continuous 90% cover or greater of the soil surface. Maintenance shall be required to maintain appropriate depth and 90% cover. Temporary vegetation may be employed instead of mulch if the area will remain undisturbed for less than six months. If an area will remain undisturbed for greater than six months, permanent vegetative techniques shall be employed.

SPECIFICATIONS

MULCHING WITHOUT SEEDING
This standard applies to grades or cleared areas where seedlings may not have a suitable growing season to produce an erosion retardant cover, but can be stabilized with a mulch cover.

SITE PREPARATION

1. Grade to permit the use of equipment for applying anchoring mulch.
2. Install needed erosion control measures as required such as dikes, diversions, berms, terraces and sediment barriers.
3. Loosen compact soil to a minimum depth of 3 inches.

MULCHING MATERIALS

Select one of the following materials and apply at the depth indicated:
1. Dry straw or hay shall be applied at a depth of 2 to 4 inches providing complete soil coverage. One advantage of this material is easy application
2. Wood waste (chips, sawdust or bark) shall be applied at a depth of 2 to 3 inches. Organic material from the clearing stage of development should remain on site, be chipped, and applied as mulch. This method of mulching can greatly reduce erosion control costs.
3. Polyethylene film shall be secured over banks or stockpile soil material for temporary protection. This material can be salvaged and re-used.

APPLY MULCH

When mulc is used without seeding, mulch shall be applied to provide full coverage of the exposed area.
1. Dry straw or hay mulch and wood chips shall be applied uniformly by hand or by mechanical equipment.
2. If the area will eventually be covered with perinnial vegetation, 20-30 pounds of nitrogen per acre in addition to the normal amount shall be applied to offset the uptake of nitrogen casued by the decomposition of the organic mulches.
3. Cutback asphalt shall be applied uniformly. Care should be taken in areas of pedestrian traffic due to problems of 'tracking in' or damage to shoes, clothing, etc.
4. Apply polyethylene film on exposed areas.

ANCHORING MULCH

1. Straw or hay can be pressed into the soil with a disk harrow with the disk set straight or with a special "pacer disk." Disks may be smooth or serrated and should be 20 inches or more in diameter and 8 to 12 inches apart. The edges of the disk should be dull enough not to cut the mulch but to press it into the soil leaving much of it in an erect position. Straw or hay mulch shall be anchored immediately after application. Straw or hay mulch spread with special blower-type equipment may be anchored with emulsified ashpalt (Grade AE-5 or SS-1). The asphalt emulsion shall be sprayed onto the mulch as it is ejected from the machine. Use 100 gallons of emulsified ashpalt and 100 gallons of water per ton of mulch. Tackifiers and binders can be substituted for emulsified asphalt. Please refer to specification Tb-Tackifers and Binders. Plastic mesh or netting with mesh no larger than one inch by one inch shall be installed according to manufactuer's specifications.
2. Netting of the appropriate size shall be used to anchor wood waste. Openings of the netting shall not be larger than the average size of the wood waste chips.
3. Polyethylene film shall be anchor trenched at the top as well as incrementally as necessary.

52

ESG ENGINEERING
6400 Peake Rd
Macon, GA 31210
Ph: (478) 474-4996
Fax: (478) 474-5045

GROUNDWATER WELLS #4 & #5
FOR THE
CITY OF FLOWERY BRANCH

REVISIONS

NO.	DESCRIPTION	DATE
1	ESPC SHEETS	11-7-25
2	BID SET OF PLANS	12-1-25
3	REVISED WITH CITY COMMENTS	12-5-25
4	ADDENDUM #1	12-8-25
5	ADDENDUM #2	12-11-25
6	ADDENDUM #3	12-12-25
7	REVISED WITH CITY COMMENTS	12-17-25

CONFORMED SET

GEORGIA REGISTERED PROFESSIONAL ENGINEER No. PE046341 ANDREW D SWICEGOOD

DRAWN BY: DSC
CHECKED BY: ADS
DATE: OCT 2025
SCALE: N.T.S.

CONTENT:
EROSION, SEDIMENTATION, AND POLLUTION CONTROL PLAN DETAILS

SHEET NO:
C7.2

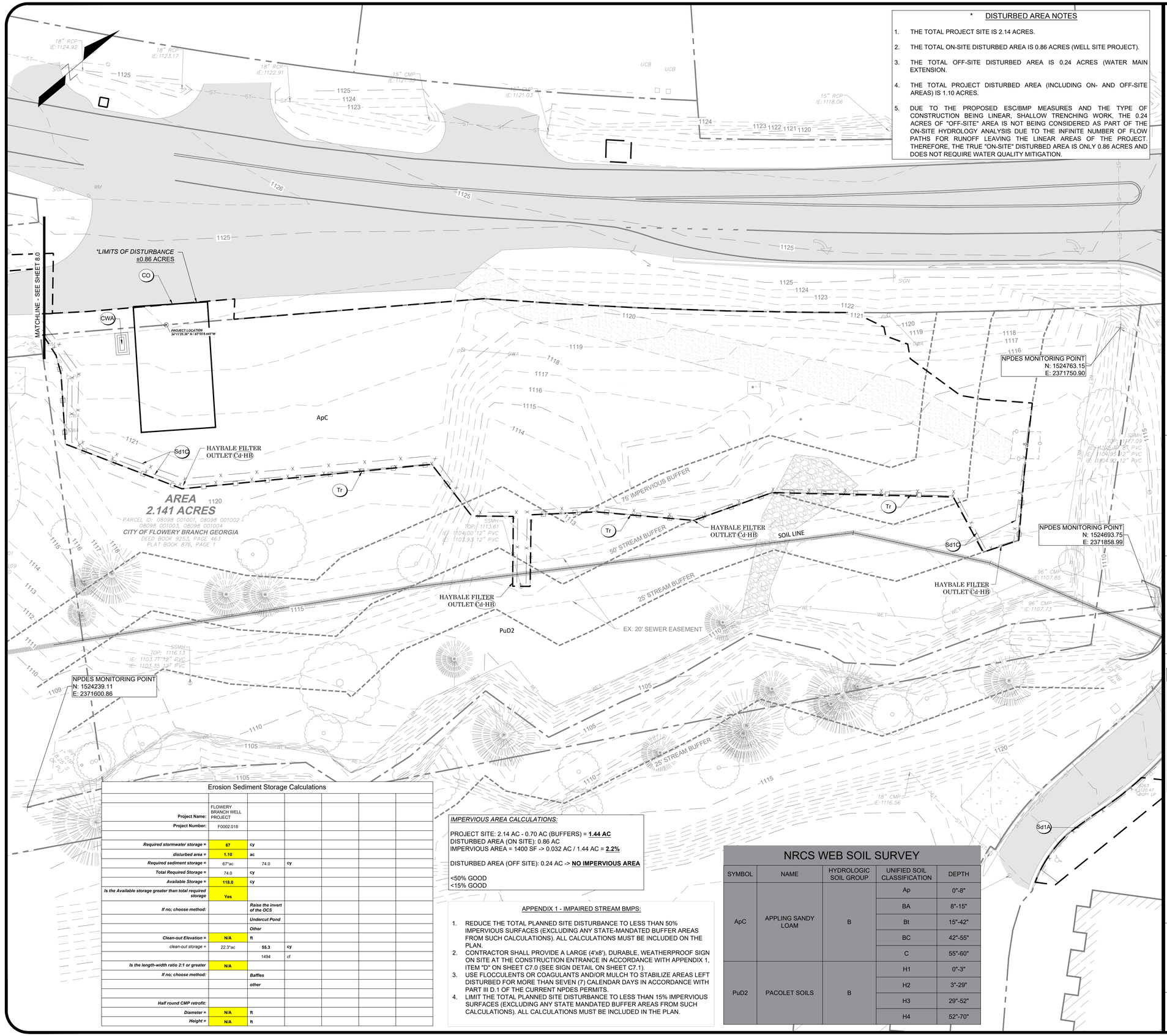

* DISTURBED AREA NOTES

1. THE TOTAL PROJECT SITE IS 2.14 ACRES.
2. THE TOTAL ON-SITE DISTURBED AREA IS 0.86 ACRES (WELL SITE PROJECT).
3. THE TOTAL OFF-SITE DISTURBED AREA IS 0.24 ACRES (WATER MAIN EXTENSION.
4. THE TOTAL PROJECT DISTURBED AREA (INCLUDING ON- AND OFF-SITE AREAS) IS 1.10 ACRES.
5. DUE TO THE PROPOSED ESC/BMP MEASURES AND THE TYPE OF CONSTRUCTION BEING LINEAR, SHALLOW TRENCHING WORK, THE 0.24 ACRES OF "OFF-SITE" AREA IS NOT BEING CONSIDERED AS PART OF THE ON-SITE HYDROLOGY ANALYSIS DUE TO THE INFINITE NUMBER OF FLOW PATHS FOR RUNOFF LEAVING THE LINEAR AREAS OF THE PROJECT. THEREFORE, THE TRUE "ON-SITE" DISTURBED AREA IS ONLY 0.86 ACRES AND DOES NOT REQUIRE WATER QUALITY MITIGATION.

SITE INFORMATION

PROJECT ADDRESS	4745 ATLANTA HWY
PARCEL NUMBER	08098 001001 THRU 08098 001004
PARCEL ZONING	H-B
PROJECT AREA	2.14 ACRES
BUILDING SETBACK	
FRONT	NONE
REAR	30'
SIDE	10'
LANDSCAPE SETBACK	
FRONT	10'
REAR	30'
SIDE	NONE

EROSION, SEDIMENTATION, & POLLUTION CONTROL STATEMENTS:

1. THE DESIGN PROFESSIONAL WHO PREPARED THE ES&PC PLAN IS TO INSPECT AND CERTIFY THE INSTALLATION OF THE INITIAL SEDIMENT STORAGE REQUIREMENTS AND PERIMETER CONTROL BMPS WITHIN 7 DAYS AFTER INSTALLATION.
2. NON-EXEMPT ACTIVITIES SHALL NOT BE CONDUCTED WITHIN THE 25 OR 50-FOOT UNDISTURBED STREAM BUFFERS AS MEASURED FROM THE POINT OF WRESTED VEGETATION OR WITHIN 25-FEET OF THE COASTAL MARSHLAND BUFFER AS MEASURED FROM THE JURISDICTIONAL DETERMINATION LINE WITHOUT FIRST ACQUIRING THE NECESSARY VARIANCES AND PERMITS.
3. AMENDMENTS/REVISIONS TO THE ES&PC PLAN WHICH HAVE A SIGNIFICANT EFFECT ON BMPS WITH A HYDRAULIC COMPONENT MUST BE CERTIFIED BY THE DESIGN PROFESSIONAL.
4. WASTE MATERIALS SHALL NOT BE DISCHARGED TO WATERS OF THE STATE, EXCEPT AS AUTHORIZED BY A SECTION 404 PERMIT.
5. THE ESCAPE OF SEDIMENT FROM THE SITE SHALL BE PREVENTED BY THE INSTALLATION OF EROSION AND SEDIMENT CONTROL MEASURES AND PRACTICES PRIOR TO LAND DISTURBING ACTIVITIES.
6. EROSION CONTROL MEASURES WILL BE MAINTAINED AT ALL TIMES. IF FULL IMPLEMENTATION OF THE APPROVED PLAN DOES NOT PROVIDE FOR EFFECTIVE EROSION CONTROL, ADDITIONAL EROSION AND SEDIMENT CONTROL MEASURES SHALL BE IMPLEMENTED TO CONTROL OR TREAT THE SEDIMENT SOURCE.
7. ANY DISTURBED AREA LEFT EXPOSED FOR A PERIOD GREATER THAN 14 DAYS SHALL BE STABILIZED WITH MULCH OR TEMPORARY SEEDING.

INITIAL EROSION & SEDIMENTATION CONTROL NOTES:

1. THE CONTRACTOR SHALL INSTALL ALL PERIMETER CONTROL BMP'S AND CONSTRUCTION EXIT PRIOR TO ANY LAND DISTURBING ACTIVITIES.
2. THE CONTRACTOR SHALL PROVIDE DUST CONTROL FOR THE PROJECT AREA AS NEEDED BASED ON PROJECT CONDITIONS.
3. THE CONTRACTOR SHALL PERFORM DAILY INSPECTIONS / MAINTENANCE OF ALL EROSION CONTROL BMPS. SEDIMENT LADEN RUNOFF SHALL BE CONTAINED AND TREATED ON SITE.
4. THE TOTAL ON-SITE DISTURBED AREA FOR THE INITIAL PHASE IS 0.86 ACRES.
5. THE TOTAL PROJECT DISTURBED AREA (INCLUDING OFF-SITE AREAS) IS 1.10 ACRES.

SEDIMENT STORAGE CALCULATIONS:

REQUIRED SEDIMENT STORAGE:
67 CUBIC YARD PER ACRE DRAINED = 67 CY/AC * 1.10 AC = 74.0 CY

PROVIDED SILT FENCE: 670 LF TYPE C SILT FENCE & 1,030 LF TYPE A
PROVIDED SEDIMENT STORAGE (Sd1): 3.75 SF*670 LF + 1.88 SF*1,030 LF = 118.0 CY

THE TOTAL REQUIRED SEDIMENT STORAGE FOR THE INTERMEDIATE PHASE IS 74.0 CY. THE SEDIMENT STORAGE WILL BE PROVIDED BY THE SILT FENCE (Sd1).

STRUCTURAL PRACTICES

CODE	PRACTICE	DETAIL	MAP SYMBOL	DESCRIPTION
Co	CONSTRUCTION EXIT			A crushed stone pad located at the construction site exit to provide a place for removing mud from tires thereby protecting public streets.
CWA	CONCRETE WASHOUT AREA			A washdown area for tools, concrete mixer chutes, hoppers and rear of vehicles.
Sd1	SEDIMENT BARRIER			A barrier to prevent sediment from leaving the construction site. It may be sandbags, bales of straw or hay, brush, logs and poles, gravel, or a silt fence.
Tr	TREE PROTECTION			The protection of desirable trees from injury during construction.
Cd	CHECK DAM			A small temporary barrier or dam constructed across a swale, drainage ditch or area of concentrated flow.

Erosion Sediment Storage Calculations

Project Name:	FLOWERY BRANCH WELL PROJECT					
Project Number:	F0002.018					
Required stormwater storage =	**67**	**cy**				
disturbed area =	**1.10**	**ac**				
Required sediment storage =	67*ac	74.0	**cy**			
Total Required Storage =	74.0	**cy**				
Available Storage =	**118.0**	**cy**				
Is the Available storage greater than total required storage	**Yes**					
If no; choose method:		***Raise the invert of the OCS***				
		Undercut Pond				
		Other				
Clean-out Elevation =	**N/A**	**ft**				
clean-out storage =	22.3*ac	**55.3**	**cy**			
		1494	cf			
Is the length-width ratio 2:1 or greater	**N/A**					
If no; choose method:		***Baffles***				
		other				
Half round CMP retrofit:						
Diameter =	**N/A**	**ft**				
Height =	**N/A**	**ft**				

IMPERVIOUS AREA CALCULATIONS:

PROJECT SITE: 2.14 AC - 0.70 AC (BUFFERS) = **1.44 AC**
DISTURBED AREA (ON SITE): 0.86 AC
IMPERVIOUS AREA = 1400 SF -> 0.032 AC / 1.44 AC = **2.2%**

DISTURBED AREA (OFF SITE): 0.24 AC -> **NO IMPERVIOUS AREA**

<50% GOOD
<15% GOOD

APPENDIX 1 - IMPAIRED STREAM BMPS:

1. REDUCE THE TOTAL PLANNED SITE DISTURBANCE TO LESS THAN 50% IMPERVIOUS SURFACES (EXCLUDING ANY STATE-MANDATED BUFFER AREAS FROM SUCH CALCULATIONS). ALL CALCULATIONS MUST BE INCLUDED ON THE PLAN.
2. CONTRACTOR SHALL PROVIDE A LARGE (4'x8'), DURABLE, WEATHERPROOF SIGN ON SITE AT THE CONSTRUCTION ENTRANCE IN ACCORDANCE WITH APPENDIX 1, ITEM "D" ON SHEET C7.0 (SEE SIGN DETAIL ON SHEET C7.1).
3. USE FLOCCULENTS OR COAGULANTS AND/OR MULCH TO STABILIZE AREAS LEFT DISTURBED FOR MORE THAN SEVEN (7) CALENDAR DAYS IN ACCORDANCE WITH PART III D.1 OF THE CURRENT NPDES PERMITS.
4. LIMIT THE TOTAL PLANNED SITE DISTURBANCE TO LESS THAN 15% IMPERVIOUS SURFACES (EXCLUDING ANY STATE MANDATED BUFFER AREAS FROM SUCH CALCULATIONS). ALL CALCULATIONS MUST BE INCLUDED IN THE PLAN.

NRCS WEB SOIL SURVEY

SYMBOL	NAME	HYDROLOGIC SOIL GROUP	UNIFIED SOIL CLASSIFICATION	DEPTH
ApC	APPLING SANDY LOAM	B	Ap	0"-8"
			BA	8"-15"
			Bt	15"-42"
			BC	42"-55"
			C	55"-60"
PuD2	PACOLET SOILS	B	H1	0"-3"
			H2	3"-29"
			H3	29"-52"
			H4	52"-70"

20' 10' 0' 20'
GRAPHIC SCALE 1" = 20'

GSWCC GEORGIA SOIL AND WATER CONSERVATION COMMISSION
Delmas S Crisp III
LEVEL II CERTIFIED DESIGN PROFESSIONAL
CERTIFICATION NUMBER: 0000100336
ISSUED: 11/08/2025 EXPIRES: 11/08/2028

GEORGIA811 www.Georgia811.com

ESG ENGINEERING
6400 Peake Rd
Macon, GA 31210
Ph: (478) 474-4996
Fax: (478) 474-5045

GROUNDWATER WELLS #4 & #5

FOR THE
CITY OF FLOWERY BRANCH

REVISIONS NO.	DESCRIPTION	DATE
1	ESPC SHEETS	11-7-25
2	BID SET OF PLANS	12-1-25
3	REVISED WITH CITY COMMENTS	12-5-25
4	ADDENDUM #1	12-8-25
5	ADDENDUM #2	12-11-25
6	ADDENDUM #3	12-12-25
7	REVISED WITH CITY COMMENTS	12-17-25

CONFORMED SET

GEORGIA REGISTERED No. PE046341 PROFESSIONAL ENGINEER ANDREW D SWICEGOOD

DRAWN BY: DSC
CHECKED BY: ADS
DATE: OCT 2025
SCALE: SEE SCALE

CONTENT:

CIVIL:
INITIAL EROSION, SEDIMENTATION, & POLLUTION CONTROL PLAN

SHEET NO: 2 3 7
C8.0

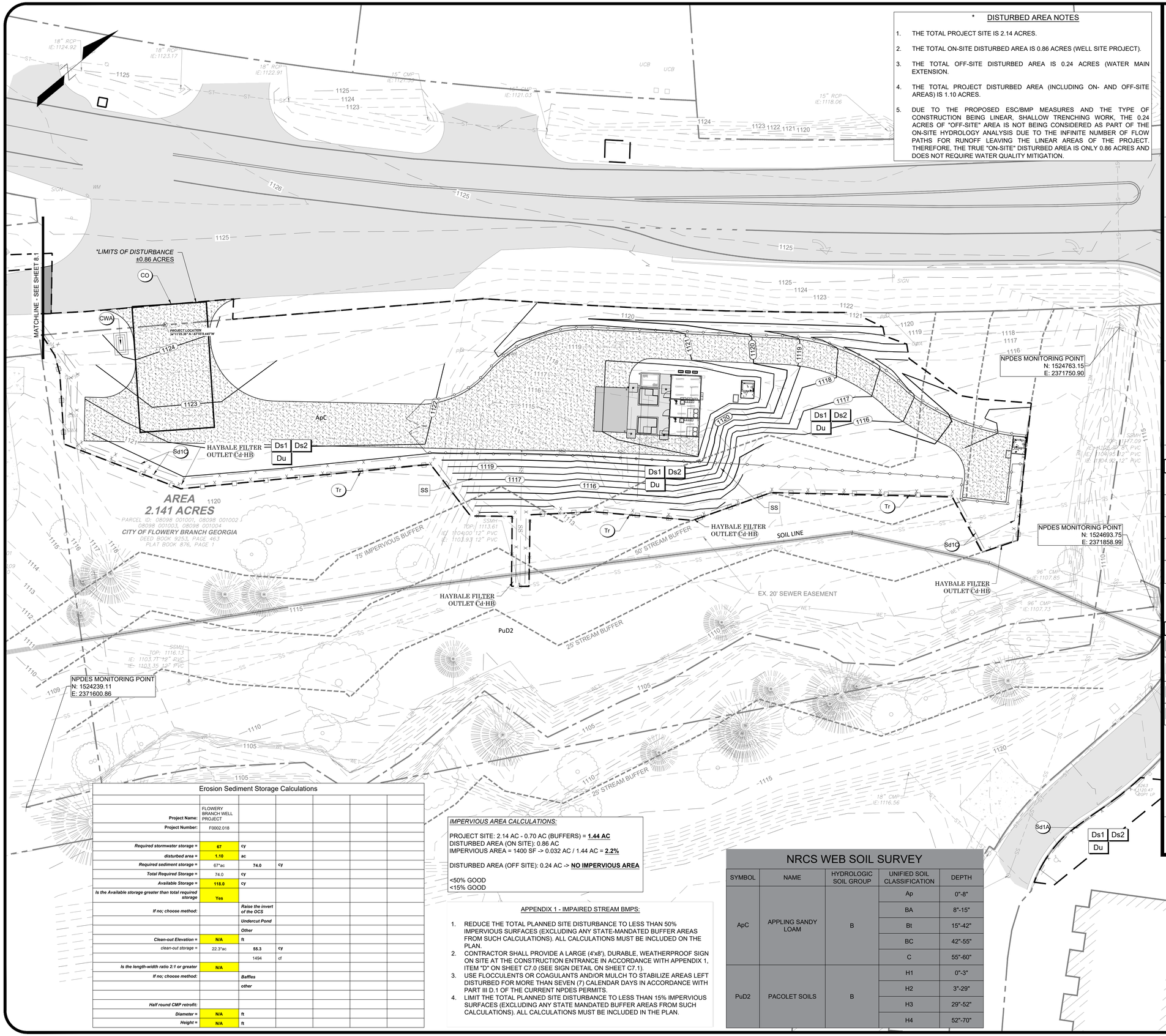

* DISTURBED AREA NOTES

1. THE TOTAL PROJECT SITE IS 2.14 ACRES.
2. THE TOTAL ON-SITE DISTURBED AREA IS 0.86 ACRES (WELL SITE PROJECT).
3. THE TOTAL OFF-SITE DISTURBED AREA IS 0.24 ACRES (WATER MAIN EXTENSION.
4. THE TOTAL PROJECT DISTURBED AREA (INCLUDING ON- AND OFF-SITE AREAS) IS 1.10 ACRES.
5. DUE TO THE PROPOSED ESC/BMP MEASURES AND THE TYPE OF CONSTRUCTION BEING LINEAR, SHALLOW TRENCHING WORK, THE 0.24 ACRES OF "OFF-SITE" AREA IS NOT BEING CONSIDERED AS PART OF THE ON-SITE HYDROLOGY ANALYSIS DUE TO THE INFINITE NUMBER OF FLOW PATHS FOR RUNOFF LEAVING THE LINEAR AREAS OF THE PROJECT. THEREFORE, THE TRUE "ON-SITE" DISTURBED AREA IS ONLY 0.86 ACRES AND DOES NOT REQUIRE WATER QUALITY MITIGATION.

EROSION, SEDIMENTATION, & POLLUTION CONTROL STATEMENTS:

1. THE DESIGN PROFESSIONAL WHO PREPARED THE ES&PC PLAN IS TO INSPECT AND CERTIFY THE INSTALLATION OF THE INITIAL SEDIMENT STORAGE REQUIREMENTS AND PERIMETER CONTROL BMPS WITHIN 7 DAYS AFTER INSTALLATION.
2. NON-EXEMPT ACTIVITIES SHALL NOT BE CONDUCTED WITHIN THE 25 OR 50-FOOT UNDISTURBED STREAM BUFFERS AS MEASURED FROM THE POINT OF WRESTED VEGETATION OR WITHIN 25-FEET OF THE COASTAL MARSHLAND BUFFER AS MEASURED FROM THE JURISDICTIONAL DETERMINATION LINE WITHOUT FIRST ACQUIRING THE NECESSARY VARIANCES AND PERMITS.
3. AMENDMENTS/REVISIONS TO THE ES&PC PLAN WHICH HAVE A SIGNIFICANT EFFECT ON BMPS WITH A HYDRAULIC COMPONENT MUST BE CERTIFIED BY THE DESIGN PROFESSIONAL.
4. WASTE MATERIALS SHALL NOT BE DISCHARGED TO WATERS OF THE STATE, EXCEPT AS AUTHORIZED BY A SECTION 404 PERMIT.
5. THE ESCAPE OF SEDIMENT FROM THE SITE SHALL BE PREVENTED BY THE INSTALLATION OF EROSION AND SEDIMENT CONTROL MEASURES AND PRACTICES PRIOR TO LAND DISTURBING ACTIVITIES.
6. EROSION CONTROL MEASURES WILL BE MAINTAINED AT ALL TIMES. IF FULL IMPLEMENTATION OF THE APPROVED PLAN DOES NOT PROVIDE FOR EFFECTIVE EROSION CONTROL, ADDITIONAL EROSION AND SEDIMENT CONTROL MEASURES SHALL BE IMPLEMENTED TO CONTROL OR TREAT THE SEDIMENT SOURCE.
7. ANY DISTURBED AREA LEFT EXPOSED FOR A PERIOD GREATER THAN 14 DAYS SHALL BE STABILIZED WITH MULCH OR TEMPORARY SEEDING.

INTERMEDIATE EROSION & SEDIMENTATION CONTROL NOTES:

1. CONTRACTOR SHALL INSTALL CONCRETE WASH AREA. CONCRETE WASH AREA SHALL BE USED FOR WASHDOWN OF TOOLS, CONCRETE MIXER CHUTES, HOPPERS AND REAR OF THE VEHICLES ONLY. WASHOUT OF THE DRUM AT THE CONSTRUCTION SITE IS PROHIBITED.
2. THE CONTRACTOR SHALL PROVIDE DUST CONTROL FOR THE PROJECT AREA AS NEEDED BASED ON PROJECT CONDITIONS.
3. THE CONTRACTOR SHALL PERFORM DAILY INSPECTIONS / MAINTENANCE OF ALL EROSION CONTROL BMP'S. SEDIMENT LADEN RUNOFF SHALL BE CONTAINED AND TREATED ON SITE.
4. THE TOTAL ON-SITE DISTURBED AREA FOR THE INITIAL PHASE IS 0.86 ACRES.
5. THE TOTAL PROJECT DISTURBED AREA (INCLUDING OFF-SITE AREAS) IS 1.10 ACRES.
6. THE PRIMARY PERMITTEE WILL RETAIN ESG (THE DESIGN PROFESSIONAL) DURING ALL PHASES OF ESPC.
7. PROVIDED SILT FENCE: ±1,030 LF SILT FENCE TYPE A & ±670 LF SILT FENCE TYPE C.

SEDIMENT STORAGE CALCULATIONS:

REQUIRED SEDIMENT STORAGE:
67 CUBIC YARD PER ACRE DRAINED = 67 CY/AC * 1.10 AC = 74.0 CY

PROVIDED SILT FENCE: 670 LF TYPE C SILT FENCE & 1,030 LF TYPE A
PROVIDED SEDIMENT STORAGE (Sd1): 3.75 SF*670 LF + 1.88 SF*1,030 LF = 118.0 CY

THE TOTAL REQUIRED SEDIMENT STORAGE FOR THE INTERMEDIATE PHASE IS 74.0 CY. THE SEDIMENT STORAGE WILL BE PROVIDED BY THE SILT FENCE (Sd1).

STRUCTURAL PRACTICES

CODE	PRACTICE	DETAIL	MAP SYMBOL	DESCRIPTION
Co	CONSTRUCTION EXIT			A crushed stone pad located at the construction site exit to provide a place for removing mud from tires thereby protecting public streets.
CWA	CONCRETE WASHOUT AREA			A washdown area for tools, concrete mixer chutes, hoppers and rear of vehicles.
Sd1	SEDIMENT BARRIER			A barrier to prevent sediment from leaving the construction site. It may be sandbags, bales of straw or hay, brush, logs and poles, gravel, or a silt fence.
Tr	TREE PROTECTION			The protection of desirable trees from injury during construction.
Cd	CHECK DAM			A small temporary barrier or dam constructed across a swale, drainage ditch or area of concentrated flow.

VEGETATIVE PRACTICES

CODE	PRACTICE	DETAIL	MAP SYMBOL	DESCRIPTION
Ds1	DISTURBED AREA STABILIZATION (WITH MULCHING ONLY)		Ds1	Establishing temporary protection for disturbed areas where seedlings may not have a suitable growing season to produce an erosion retarding cover.
Ds2	DISTURBED AREA STABILIZATION (WITH TEMP. SEEDING)		Ds2	Establishing a temporary vegetative cover with fast growing seedings on disturbed areas.
Du	DUST CONTROL ON DISTURBED AREAS		Du	Controlling surface and air movement of dust on construction site, roadways and similar sites.
Ss	SLOPE STABILIZATION		Ss	A protective covering used to prevent erosion and establish temporary or permanent vegetation on steep slopes, shore lines, or channels.

GSWCC GEORGIA SOIL AND WATER CONSERVATION COMMISSION

Delmas S Crisp III
LEVEL II CERTIFIED DESIGN PROFESSIONAL
CERTIFICATION NUMBER: 0000100336
ISSUED: 11/08/2025 EXPIRES: 11/08/2028

GEORGIA811 www.Georgia811.com

Erosion Sediment Storage Calculations

Project Name:	FLOWERY BRANCH WELL PROJECT						
Project Number:	F0002.018						
Required stormwater storage =	**67**	**cy**					
disturbed area =	**1.10**	**ac**					
Required sediment storage =	67*ac	**74.0**	**cy**				
Total Required Storage =	74.0	**cy**					
Available Storage =	**118.0**	**cy**					
Is the Available storage greater than total required storage	**Yes**						
If no; choose method:		***Raise the invert of the OCS***					
		Undercut Pond					
		Other					
Clean-out Elevation =	**N/A**	**ft**					
clean-out storage =	22.3*ac	**55.3**	**cy**				
		1494	cf				
Is the length-width ratio 2:1 or greater	**N/A**						
If no; choose method:		***Baffles***					
		other					
Half round CMP retrofit:							
Diameter =	**N/A**	**ft**					
Height =	**N/A**	**ft**					

IMPERVIOUS AREA CALCULATIONS:

PROJECT SITE: 2.14 AC - 0.70 AC (BUFFERS) = **1.44 AC**
DISTURBED AREA (ON SITE): 0.86 AC
IMPERVIOUS AREA = 1400 SF -> 0.032 AC / 1.44 AC = **2.2%**

DISTURBED AREA (OFF SITE): 0.24 AC -> **NO IMPERVIOUS AREA**

<50% GOOD
<15% GOOD

APPENDIX 1 - IMPAIRED STREAM BMPS:

1. REDUCE THE TOTAL PLANNED SITE DISTURBANCE TO LESS THAN 50% IMPERVIOUS SURFACES (EXCLUDING ANY STATE-MANDATED BUFFER AREAS FROM SUCH CALCULATIONS). ALL CALCULATIONS MUST BE INCLUDED ON THE PLAN.
2. CONTRACTOR SHALL PROVIDE A LARGE (4'x8'), DURABLE, WEATHERPROOF SIGN ON SITE AT THE CONSTRUCTION ENTRANCE IN ACCORDANCE WITH APPENDIX 1, ITEM "D" ON SHEET C7.0 (SEE SIGN DETAIL ON SHEET C7.1).
3. USE FLOCCULENTS OR COAGULANTS AND/OR MULCH TO STABILIZE AREAS LEFT DISTURBED FOR MORE THAN SEVEN (7) CALENDAR DAYS IN ACCORDANCE WITH PART III D.1 OF THE CURRENT NPDES PERMITS.
4. LIMIT THE TOTAL PLANNED SITE DISTURBANCE TO LESS THAN 15% IMPERVIOUS SURFACES (EXCLUDING ANY STATE MANDATED BUFFER AREAS FROM SUCH CALCULATIONS). ALL CALCULATIONS MUST BE INCLUDED IN THE PLAN.

NRCS WEB SOIL SURVEY

SYMBOL	NAME	HYDROLOGIC SOIL GROUP	UNIFIED SOIL CLASSIFICATION	DEPTH
ApC	APPLING SANDY LOAM	B	Ap	0"-8"
			BA	8"-15"
			Bt	15"-42"
			BC	42"-55"
			C	55"-60"
PuD2	PACOLET SOILS	B	H1	0"-3"
			H2	3"-29"
			H3	29"-52"
			H4	52"-70"

Ds1 Ds2 Du
ALL DISTURBED AREAS

ESG ENGINEERING
6400 Peake Rd
Macon, GA 31210
Ph: (478) 474-4996
Fax: (478) 474-5045

GROUNDWATER WELLS #4 & #5

FOR THE
CITY OF FLOWERY BRANCH

REVISIONS	DATE
ESPC SHEETS	11-7-25
BID SET OF PLANS	12-1-25
REVISED WITH CITY COMMENTS	12-5-25
ADDENDUM #1	12-8-25
ADDENDUM #2	12-11-25
ADDENDUM #3	12-12-25
REVISED WITH CITY COMMENTS	12-17-25

CONFORMED SET

GEORGIA REGISTERED No. PE046341 PROFESSIONAL ENGINEER ANDREW D SWICEGOOD

DRAWN BY: DSC
CHECKED BY: ADS
DATE: OCT 2025
SCALE: SEE SCALE

CONTENT:

CIVIL:
INTERMEDIATE EROSION SEDIMENTATION, & POLLUTION CONTROL PLAN

SHEET NO:
2 3 4
C8.1

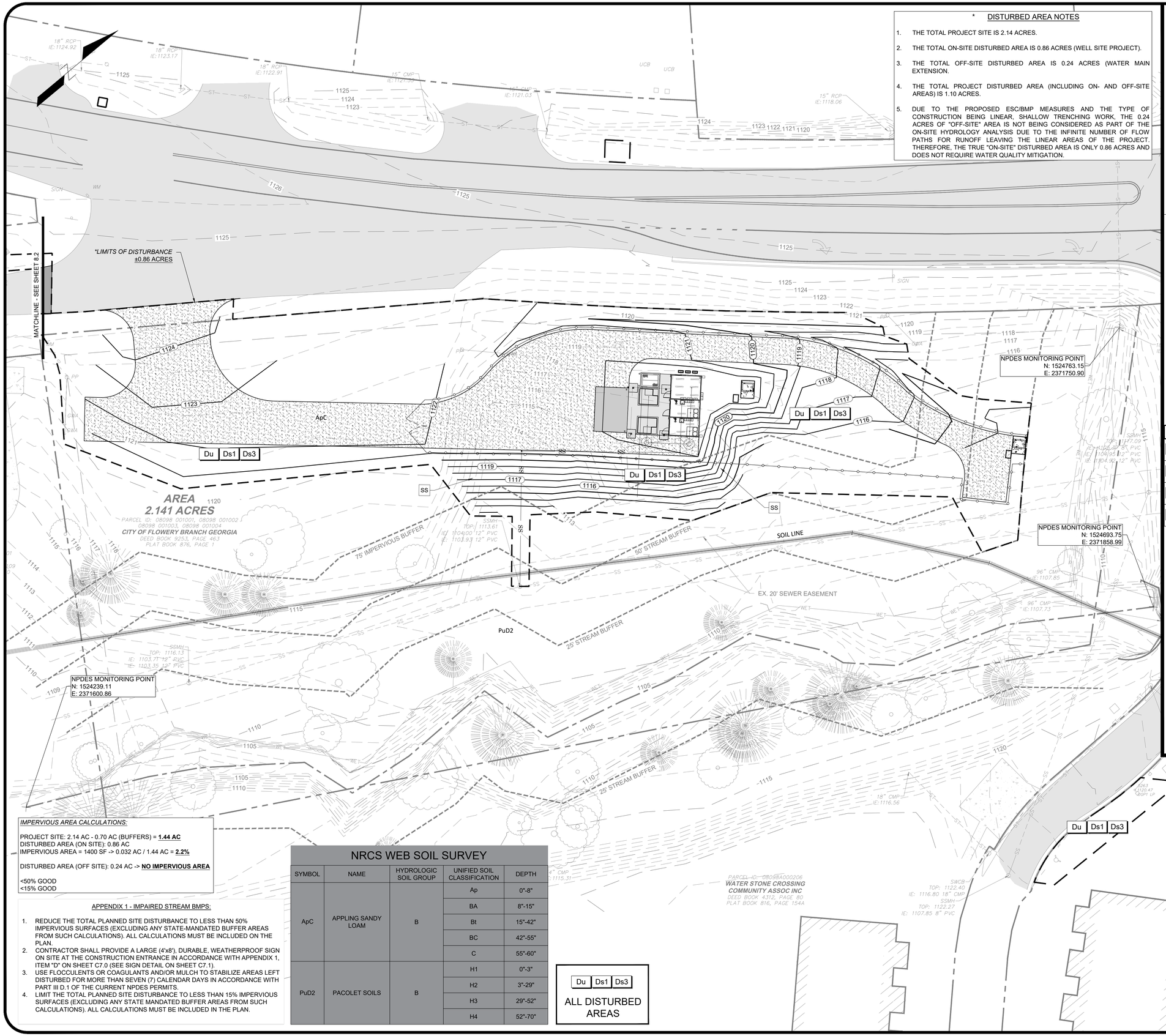

* DISTURBED AREA NOTES

1. THE TOTAL PROJECT SITE IS 2.14 ACRES.
2. THE TOTAL ON-SITE DISTURBED AREA IS 0.86 ACRES (WELL SITE PROJECT).
3. THE TOTAL OFF-SITE DISTURBED AREA IS 0.24 ACRES (WATER MAIN EXTENSION.
4. THE TOTAL PROJECT DISTURBED AREA (INCLUDING ON- AND OFF-SITE AREAS) IS 1.10 ACRES.
5. DUE TO THE PROPOSED ESC/BMP MEASURES AND THE TYPE OF CONSTRUCTION BEING LINEAR, SHALLOW TRENCHING WORK, THE 0.24 ACRES OF "OFF-SITE" AREA IS NOT BEING CONSIDERED AS PART OF THE ON-SITE HYDROLOGY ANALYSIS DUE TO THE INFINITE NUMBER OF FLOW PATHS FOR RUNOFF LEAVING THE LINEAR AREAS OF THE PROJECT. THEREFORE, THE TRUE "ON-SITE" DISTURBED AREA IS ONLY 0.86 ACRES AND DOES NOT REQUIRE WATER QUALITY MITIGATION.

EROSION, SEDIMENTATION, & POLLUTION CONTROL STATEMENTS:

1. THE DESIGN PROFESSIONAL WHO PREPARED THE ES&PC PLAN IS TO INSPECT AND CERTIFY THE INSTALLATION OF THE INITIAL SEDIMENT STORAGE REQUIREMENTS AND PERIMETER CONTROL BMPS WITHIN 7 DAYS AFTER INSTALLATION.
2. NON-EXEMPT ACTIVITIES SHALL NOT BE CONDUCTED WITHIN THE 25 OR 50-FOOT UNDISTURBED STREAM BUFFERS AS MEASURED FROM THE POINT OF WRESTED VEGETATION OR WITHIN 25-FEET OF THE COASTAL MARSHLAND BUFFER AS MEASURED FROM THE JURISDICTIONAL DETERMINATION LINE WITHOUT FIRST ACQUIRING THE NECESSARY VARIANCES AND PERMITS.
3. AMENDMENTS/REVISIONS TO THE ES&PC PLAN WHICH HAVE A SIGNIFICANT EFFECT ON BMPS WITH A HYDRAULIC COMPONENT MUST BE CERTIFIED BY THE DESIGN PROFESSIONAL.
4. WASTE MATERIALS SHALL NOT BE DISCHARGED TO WATERS OF THE STATE, EXCEPT AS AUTHORIZED BY A SECTION 404 PERMIT.
5. THE ESCAPE OF SEDIMENT FROM THE SITE SHALL BE PREVENTED BY THE INSTALLATION OF EROSION AND SEDIMENT CONTROL MEASURES AND PRACTICES PRIOR TO LAND DISTURBING ACTIVITIES.
6. EROSION CONTROL MEASURES WILL BE MAINTAINED AT ALL TIMES. IF FULL IMPLEMENTATION OF THE APPROVED PLAN DOES NOT PROVIDE FOR EFFECTIVE EROSION CONTROL, ADDITIONAL EROSION AND SEDIMENT CONTROL MEASURES SHALL BE IMPLEMENTED TO CONTROL OR TREAT THE SEDIMENT SOURCE.
7. ANY DISTURBED AREA LEFT EXPOSED FOR A PERIOD GREATER THAN 14 DAYS SHALL BE STABILIZED WITH MULCH OR TEMPORARY SEEDING.

FINAL EROSION & SEDIMENTATION CONTROL NOTES:

1. CONTRACTOR SHALL INSTALL CONCRETE WASH AREA. CONCRETE WASH AREA SHALL BE USED FOR WASHDOWN OF TOOLS, CONCRETE MIXER CHUTES, HOPPERS AND REAR OF THE VEHICLES ONLY. WASHOUT OF THE DRUM AT THE CONSTRUCTION SITE IS PROHIBITED.
2. THE CONTRACTOR SHALL REMOVE ALL TEMPORARY BMP'S ONCE FINAL STABILIZATION HAS BEEN MET.
3. THE CONTRACTOR SHALL PERFORM DAILY INSPECTIONS / MAINTENANCE OF ALL EROSION CONTROL BMPS. SEDIMENT LADEN RUNOFF SHALL BE CONTAINED AND TREATED ON SITE.
4. THE PRIMARY PERMITTEE WILL RETAIN THE DESIGN PROFESSIONAL DURING THE INTERMEDIATE GRADING AND DRAINAGE BMP PHASE, AS WELL AS THE FINAL BMP PHASE.
5. DRUM WASHOUT IS PROHIBITED FROM CONSTRUCTION SITE.
4. THE TOTAL ON-SITE DISTURBED AREA FOR THE INITIAL PHASE IS 0.86 ACRES.
5. THE TOTAL PROJECT DISTURBED AREA (INCLUDING OFF-SITE AREAS) IS 1.10 ACRES.

VEGETATIVE PRACTICES

CODE	PRACTICE	DETAIL	MAP SYMBOL	DESCRIPTION
Du	DUST CONTROL ON DISTURBED AREAS		Du	Controlling surface and air movement of dust on construction site, roadways and similar sites.
Ds1	DISTURBED AREA STABILIZATION (WITH MULCHING ONLY)		Ds1	Establishing temporary protection for disturbed areas where seedings may not have a suitable growing season to produce an erosion retarding cover.
Ds3	DISTURBED AREA STABILIZATION (WITH PERM SEEDING)		Ds3	Establishing a permanent vegetative cover such as trees, shrubs, vines, grasses, or legumes on disturbed areas.
Ss	SLOPE STABILIZATION		Ss	A protective covering used to prevent erosion and establish temporary or permanent vegetation on steep slopes, shore lines, or channels.

IMPERVIOUS AREA CALCULATIONS:

PROJECT SITE: 2.14 AC - 0.70 AC (BUFFERS) = **1.44 AC**
DISTURBED AREA (ON SITE): 0.86 AC
IMPERVIOUS AREA = 1400 SF -> 0.032 AC / 1.44 AC = **2.2%**

DISTURBED AREA (OFF SITE): 0.24 AC -> **NO IMPERVIOUS AREA**

<50% GOOD
<15% GOOD

NRCS WEB SOIL SURVEY

SYMBOL	NAME	HYDROLOGIC SOIL GROUP	UNIFIED SOIL CLASSIFICATION	DEPTH
ApC	APPLING SANDY LOAM	B	Ap	0"-8"
			BA	8"-15"
			Bt	15"-42"
			BC	42"-55"
			C	55"-60"
PuD2	PACOLET SOILS	B	H1	0"-3"
			H2	3"-29"
			H3	29"-52"
			H4	52"-70"

APPENDIX 1 - IMPAIRED STREAM BMPS:

1. REDUCE THE TOTAL PLANNED SITE DISTURBANCE TO LESS THAN 50% IMPERVIOUS SURFACES (EXCLUDING ANY STATE-MANDATED BUFFER AREAS FROM SUCH CALCULATIONS). ALL CALCULATIONS MUST BE INCLUDED ON THE PLAN.
2. CONTRACTOR SHALL PROVIDE A LARGE (4'x8'), DURABLE, WEATHERPROOF SIGN ON SITE AT THE CONSTRUCTION ENTRANCE IN ACCORDANCE WITH APPENDIX 1, ITEM "D" ON SHEET C7.0 (SEE SIGN DETAIL ON SHEET C7.1).
3. USE FLOCCULENTS OR COAGULANTS AND/OR MULCH TO STABILIZE AREAS LEFT DISTURBED FOR MORE THAN SEVEN (7) CALENDAR DAYS IN ACCORDANCE WITH PART III D.1 OF THE CURRENT NPDES PERMITS.
4. LIMIT THE TOTAL PLANNED SITE DISTURBANCE TO LESS THAN 15% IMPERVIOUS SURFACES (EXCLUDING ANY STATE MANDATED BUFFER AREAS FROM SUCH CALCULATIONS). ALL CALCULATIONS MUST BE INCLUDED IN THE PLAN.

GSWCC GEORGIA SOIL AND WATER CONSERVATION COMMISSION
Delmas S Crisp III
LEVEL II CERTIFIED DESIGN PROFESSIONAL
CERTIFICATION NUMBER: 0000100336
ISSUED: 11/08/2025 EXPIRES: 11/08/2028

GEORGIA811 www.Georgia811.com

20' 10' 0' 20'
GRAPHIC SCALE 1" = 20'

ESG ENGINEERING
6400 Peake Rd
Macon, GA 31210
Ph: (478) 474-4996
Fax: (478) 474-5045

GROUNDWATER WELLS #4 & #5

FOR THE
CITY OF FLOWERY BRANCH

NO	REVISION	DATE
1	ESPC SHEETS	11-7-25
2	BID SET OF PLANS	12-1-25
3	REVISED WITH CITY COMMENTS	12-5-25
4	ADDENDUM #1	12-8-25
5	ADDENDUM #2	12-11-25
6	ADDENDUM #3	12-12-25
7	REVISED WITH CITY COMMENTS	12-17-25

CONFORMED SET

GEORGIA REGISTERED No. PE046341 PROFESSIONAL ENGINEER ANDREW D SWICEGOOD

DRAWN BY: DSC
CHECKED BY: ADS
DATE: OCT 2025
SCALE: SEE SCALE

CONTENT:

CIVIL:
FINAL EROSION, SEDIMENTATION, & POLLUTION CONTROL PLAN

SHEET NO: 2 3 7

C8.2

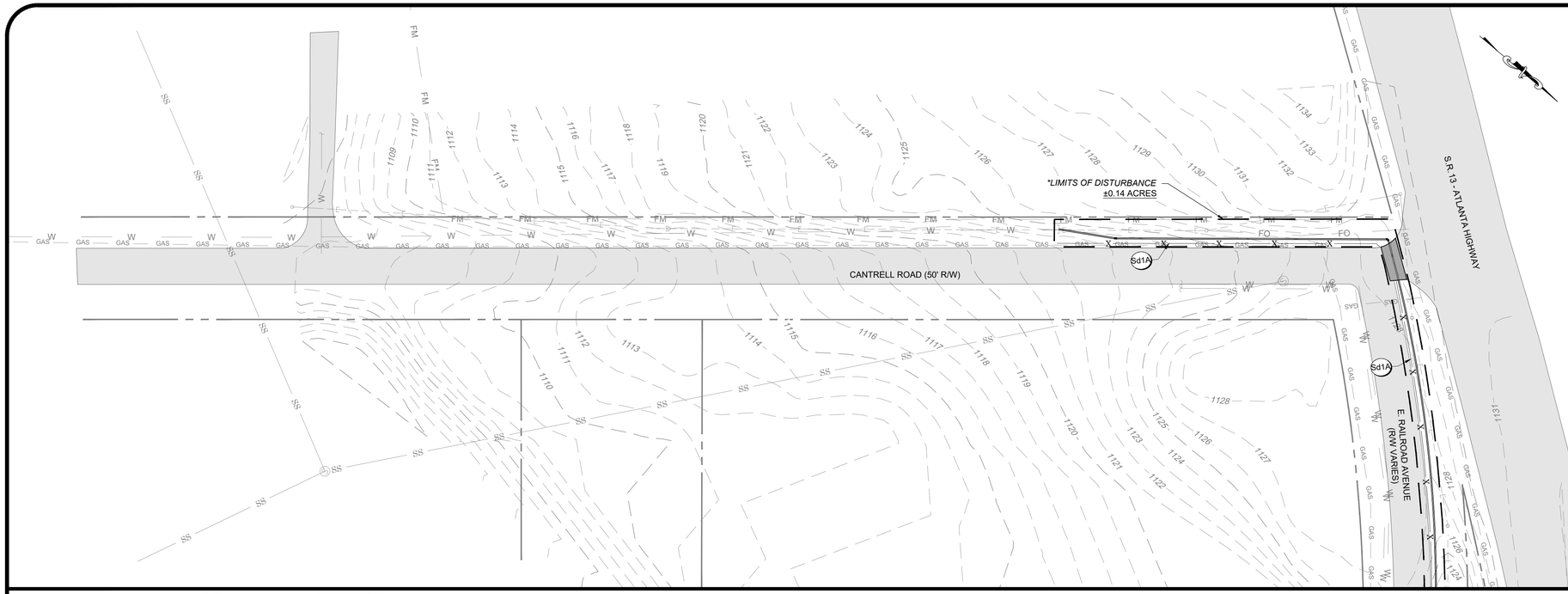

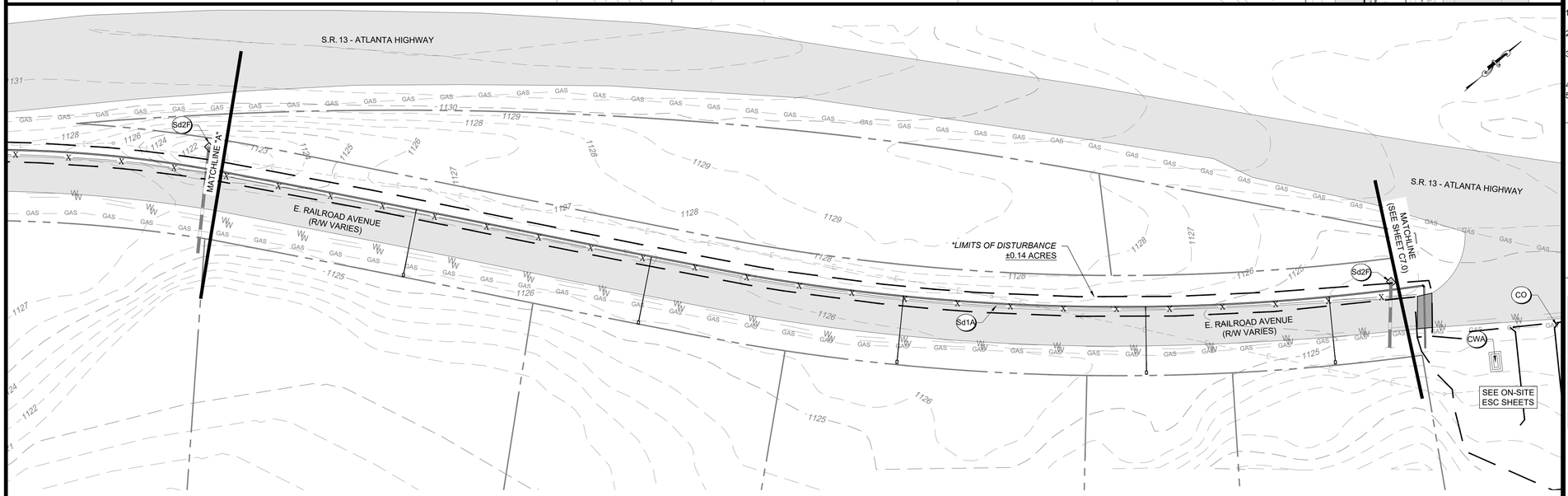

SITE INFORMATION	
PROJECT ADDRESS	4745 ATLANTA HWY
PARCEL NUMBER	08098 001001 THRU 08098 001004
PARCEL ZONING	H-B
PROJECT AREA	2.14 ACRES
BUILDING SETBACK	
FRONT	NONE
REAR	30'
SIDE	10'
LANDSCAPE SETBACK	
FRONT	10'
REAR	30'
SIDE	NONE

EROSION, SEDIMENTATION, & POLLUTION CONTROL STATEMENTS:

1. THE DESIGN PROFESSIONAL WHO PREPARED THE ES&PC PLAN IS TO INSPECT AND CERTIFY THE INSTALLATION OF THE INITIAL SEDIMENT STORAGE REQUIREMENTS AND PERIMETER CONTROL BMPS WITHIN 7 DAYS AFTER INSTALLATION.
2. NON-EXEMPT ACTIVITIES SHALL NOT BE CONDUCTED WITHIN THE 25 OR 50-FOOT UNDISTURBED STREAM BUFFERS AS MEASURED FROM THE POINT OF WRESTED VEGETATION OR WITHIN 25-FEET OF THE COASTAL MARSHLAND BUFFER AS MEASURED FROM THE JURISDICTIONAL DETERMINATION LINE WITHOUT FIRST ACQUIRING THE NECESSARY VARIANCES AND PERMITS.
3. AMENDMENTS/REVISIONS TO THE ES&PC PLAN WHICH HAVE A SIGNIFICANT EFFECT ON BMPS WITH A HYDRAULIC COMPONENT MUST BE CERTIFIED BY THE DESIGN PROFESSIONAL.
4. WASTE MATERIALS SHALL NOT BE DISCHARGED TO WATERS OF THE STATE, EXCEPT AS AUTHORIZED BY A SECTION 404 PERMIT.
5. THE ESCAPE OF SEDIMENT FROM THE SITE SHALL BE PREVENTED BY THE INSTALLATION OF EROSION AND SEDIMENT CONTROL MEASURES AND PRACTICES PRIOR TO LAND DISTURBING ACTIVITIES.
6. EROSION CONTROL MEASURES WILL BE MAINTAINED AT ALL TIMES. IF FULL IMPLEMENTATION OF THE APPROVED PLAN DOES NOT PROVIDE FOR EFFECTIVE EROSION CONTROL, ADDITIONAL EROSION AND SEDIMENT CONTROL MEASURES SHALL BE IMPLEMENTED TO CONTROL OR TREAT THE SEDIMENT SOURCE.
7. ANY DISTURBED AREA LEFT EXPOSED FOR A PERIOD GREATER THAN 14 DAYS SHALL BE STABILIZED WITH MULCH OR TEMPORARY SEEDING.

INITIAL EROSION & SEDIMENTATION CONTROL NOTES:

1. THE CONTRACTOR SHALL INSTALL ALL PERIMETER CONTROL BMPS AND CONSTRUCTION EXIT PRIOR TO ANY LAND DISTURBING ACTIVITIES.
2. THE CONTRACTOR SHALL PROVIDE DUST CONTROL FOR THE PROJECT AREA AS NEEDED BASED ON PROJECT CONDITIONS.
3. THE CONTRACTOR SHALL PERFORM DAILY INSPECTIONS / MAINTENANCE OF ALL EROSION CONTROL BMPS. SEDIMENT LADEN RUNOFF SHALL BE CONTAINED AND TREATED ON SITE.
4. THE TOTAL ON-SITE DISTURBED AREA FOR THE INITIAL PHASE IS 0.24 ACRES.
5. THE TOTAL PROJECT DISTURBED AREA (INCLUDING ON-SITE AREAS) IS 1.10 ACRES.

SEDIMENT STORAGE CALCULATIONS:

REQUIRED SEDIMENT STORAGE:
67 CUBIC YARD PER ACRE DRAINED = 67 CY/AC * 1.10 AC = 74.0 CY

PROVIDED SILT FENCE: 670 LF TYPE C SILT FENCE & 1,030 LF TYPE A
PROVIDED SEDIMENT STORAGE (Sd1): 3.75 SF*670 LF + 1.88 SF*1,030 LF = 118.0 CY

THE TOTAL REQUIRED SEDIMENT STORAGE FOR THE INTERMEDIATE PHASE IS 74.0 CY. THE SEDIMENT STORAGE WILL BE PROVIDED BY THE SILT FENCE (Sd1) AND ROCK FILTER OUTLETS.

STRUCTURAL PRACTICES

CODE	PRACTICE	DETAIL	MAP SYMBOL	DESCRIPTION
Co	CONSTRUCTION EXIT			A crushed stone pad located at the construction site exit to provide a place for removing mud from tires thereby protecting public streets.
CWA	CONCRETE WASHOUT AREA			A washdown area for tools, concrete mixer chutes, hoppers and rear of vehicles.
Sd1	SEDIMENT BARRIER			A barrier to prevent sediment from leaving the construction site. It may be sandbags, bales of straw or hay, brush, logs and poles, gravel, or a silt fence.
Sd2	INLET SEDIMENT TRAP			A temporary protective device formed at or around an inlet to a storm drain to trap sediment.

* DISTURBED AREA NOTES

1. THE TOTAL PROJECT SITE IS 2.14 ACRES.
2. THE TOTAL ON-SITE DISTURBED AREA IS 0.86 ACRES (WELL SITE PROJECT).
3. THE TOTAL OFF-SITE DISTURBED AREA IS 0.24 ACRES (WATER MAIN EXTENSION.
4. THE TOTAL PROJECT DISTURBED AREA (INCLUDING ON- AND OFF-SITE AREAS) IS 1.10 ACRES.
5. DUE TO THE PROPOSED ESC/BMP MEASURES AND THE TYPE OF CONSTRUCTION BEING LINEAR, SHALLOW TRENCHING WORK, THE 0.24 ACRES OF "OFF-SITE" AREA IS NOT BEING CONSIDERED AS PART OF THE ON-SITE HYDROLOGY ANALYSIS DUE TO THE INFINITE NUMBER OF FLOW PATHS FOR RUNOFF LEAVING THE LINEAR AREAS OF THE PROJECT. THEREFORE, THE TRUE "ON-SITE" DISTURBED AREA IS ONLY 0.86 ACRES AND DOES NOT REQUIRE WATER QUALITY MITIGATION.

IMPERVIOUS AREA CALCULATIONS:

PROJECT SITE: 2.14 AC - 0.70 AC (BUFFERS) = **1.44 AC**
DISTURBED AREA (ON SITE): 0.86 AC
IMPERVIOUS AREA = 1400 SF -> 0.032 AC / 1.44 AC = **2.2%**

DISTURBED AREA (OFF SITE): 0.24 AC -> **NO IMPERVIOUS AREA**

<50% GOOD
<15% GOOD

NRCS WEB SOIL SURVEY

SYMBOL	NAME	HYDROLOGIC SOIL GROUP	UNIFIED SOIL CLASSIFICATION	DEPTH
ApC	APPLING SANDY LOAM	B	Ap	0"-8"
			BA	8"-15"
			Bt	15"-42"
			BC	42"-55"
			C	55"-60"
PuD2	PACOLET SOILS	B	H1	0"-3"
			H2	3"-29"
			H3	29"-52"
			H4	52"-70"

APPENDIX 1 - IMPAIRED STREAM BMPS:

1. REDUCE THE TOTAL PLANNED SITE DISTURBANCE TO LESS THAN 50% IMPERVIOUS SURFACES (EXCLUDING ANY STATE-MANDATED BUFFER AREAS FROM SUCH CALCULATIONS). ALL CALCULATIONS MUST BE INCLUDED ON THE PLAN.
2. CONTRACTOR SHALL PROVIDE A LARGE (4'x8'), DURABLE, WEATHERPROOF SIGN ON SITE AT THE CONSTRUCTION ENTRANCE IN ACCORDANCE WITH APPENDIX 1, ITEM "D" ON SHEET C7.0 (SEE SIGN DETAIL ON SHEET C7.1).
3. USE FLOCCULENTS OR COAGULANTS AND/OR MULCH TO STABILIZE AREAS LEFT DISTURBED FOR MORE THAN SEVEN (7) CALENDAR DAYS IN ACCORDANCE WITH PART III D.1 OF THE CURRENT NPDES PERMITS.
4. LIMIT THE TOTAL PLANNED SITE DISTURBANCE TO LESS THAN 15% IMPERVIOUS SURFACES (EXCLUDING ANY STATE MANDATED BUFFER AREAS FROM SUCH CALCULATIONS). ALL CALCULATIONS MUST BE INCLUDED IN THE PLAN.

GRAPHIC SCALE 1" = 30'

GSWCC GEORGIA SOIL AND WATER CONSERVATION COMMISSION
Delmas S Crisp III
LEVEL II CERTIFIED DESIGN PROFESSIONAL
CERTIFICATION NUMBER: 0000100336
ISSUED: 11/08/2025 EXPIRES: 11/08/2028

GEORGIA811 www.Georgia811.com

ESG ENGINEERING
6400 Peake Rd
Macon, GA 31210
Ph: (478) 474-4996
Fax: (478) 474-5045

GROUNDWATER WELLS #4 & #5

FOR THE
CITY OF FLOWERY BRANCH

REVISIONS

NO.	DESCRIPTION	DATE
1	ESPC SHEETS	11-7-25
2	BID SET OF PLANS	12-1-25
3	REVISED WITH CITY COMMENTS	12-5-25
4	ADDENDUM #1	12-8-25
5	ADDENDUM #2	12-11-25
6	ADDENDUM #3	12-12-25
7	REVISED WITH CITY COMMENTS	12-17-25

CONFORMED SET

GEORGIA REGISTERED No. PE046341 PROFESSIONAL ENGINEER ANDREW D SWICEGOOD

DRAWN BY: DSC
CHECKED BY: ADS
DATE: OCT 2025
SCALE: SEE SCALE

CONTENT:

CIVIL:
INITIAL ESPC - WATER MAIN EXTENSION

SHEET NO: 2 3 7

C8.3

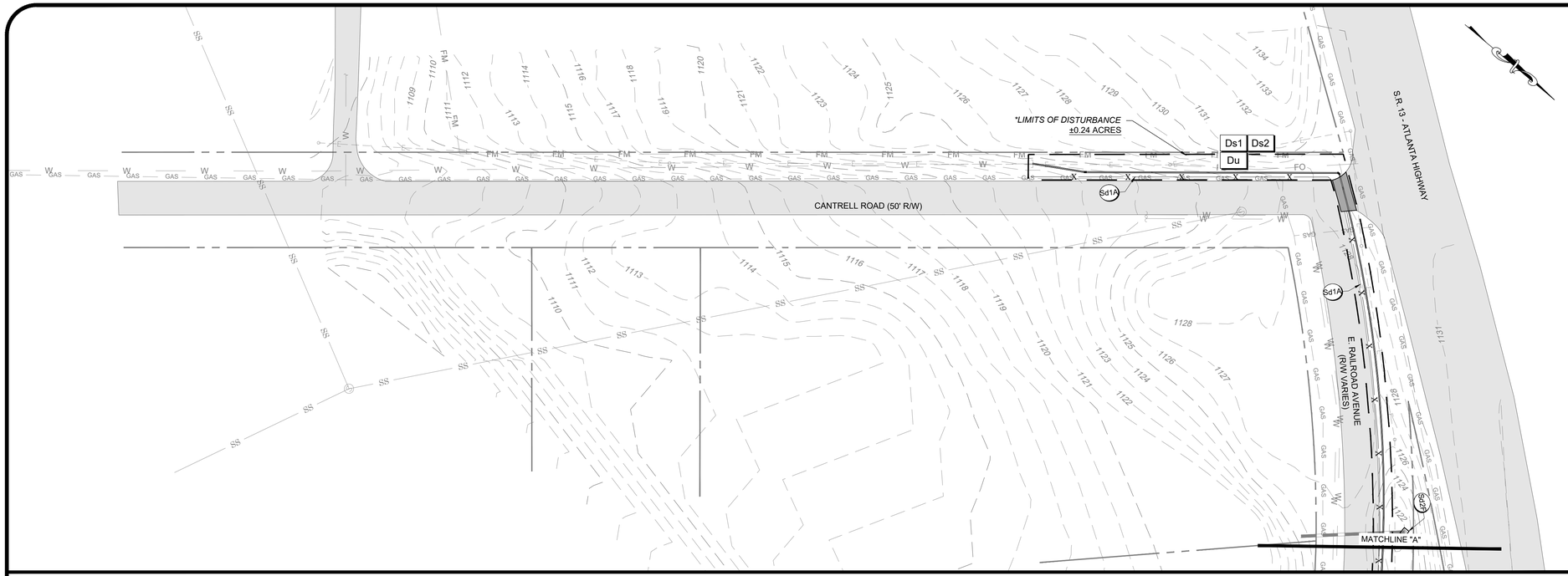

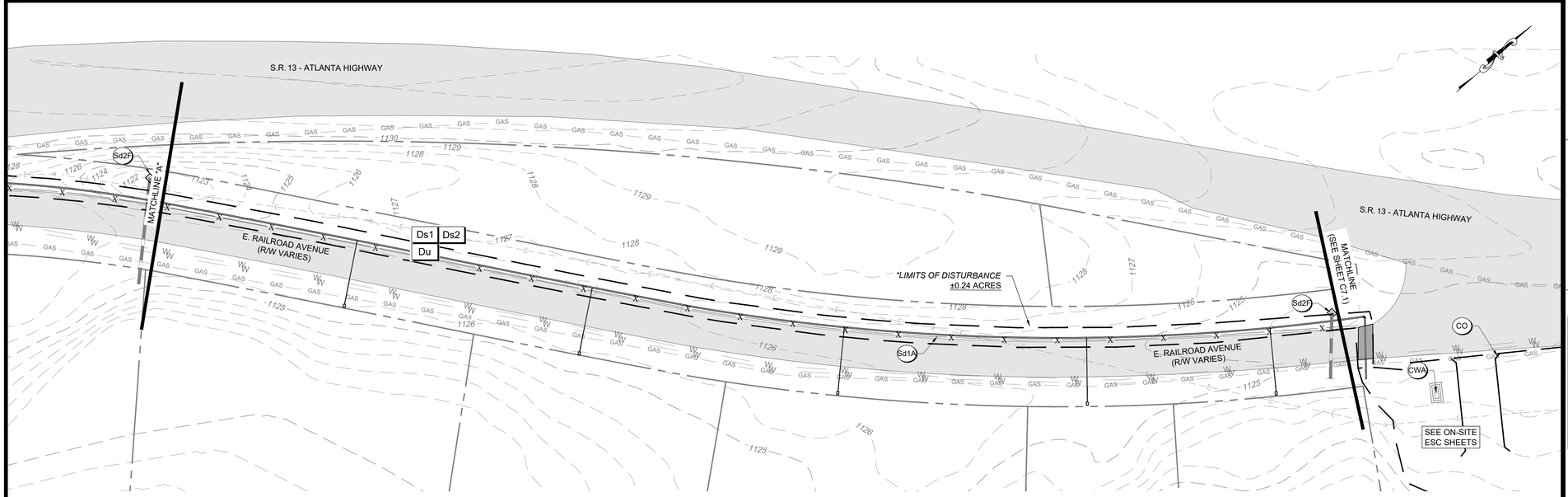

SITE INFORMATION	
PROJECT ADDRESS	4745 ATLANTA HWY
PARCEL NUMBER	08098 001001 THRU 08098 001004
PARCEL ZONING	H-B
PROJECT AREA	2.14 ACRES
BUILDING SETBACK	
FRONT	NONE
REAR	30'
SIDE	10'
LANDSCAPE SETBACK	
FRONT	10'
REAR	30'
SIDE	NONE

EROSION, SEDIMENTATION, & POLLUTION CONTROL STATEMENTS:

1. THE DESIGN PROFESSIONAL WHO PREPARED THE ES&PC PLAN IS TO INSPECT AND CERTIFY THE INSTALLATION OF THE INITIAL SEDIMENT STORAGE REQUIREMENTS AND PERIMETER CONTROL BMPS WITHIN 7 DAYS AFTER INSTALLATION.
2. NON-EXEMPT ACTIVITIES SHALL NOT BE CONDUCTED WITHIN THE 25 OR 50-FOOT UNDISTURBED STREAM BUFFERS AS MEASURED FROM THE POINT OF WRESTED VEGETATION OR WITHIN 25-FEET OF THE COASTAL MARSHLAND BUFFER AS MEASURED FROM THE JURISDICTIONAL DETERMINATION LINE WITHOUT FIRST ACQUIRING THE NECESSARY VARIANCES AND PERMITS.
3. AMENDMENTSREVISIONS TO THE ES&PC PLAN WHICH HAVE A SIGNIFICANT EFFECT ON BMPS WITH A HYDRAULIC COMPONENT MUST BE CERTIFIED BY THE DESIGN PROFESSIONAL.
4. WASTE MATERIALS SHALL NOT BE DISCHARGED TO WATERS OF THE STATE, EXCEPT AS AUTHORIZED BY A SECTION 404 PERMIT.
5. THE ESCAPE OF SEDIMENT FROM THE SITE SHALL BE PREVENTED BY THE INSTALLATION OF EROSION AND SEDIMENT CONTROL MEASURES AND PRACTICES PRIOR TO LAND DISTURBING ACTIVITIES.
6. EROSION CONTROL MEASURES WILL BE MAINTAINED AT ALL TIMES. IF FULL IMPLEMENTATION OF THE APPROVED PLAN DOES NOT PROVIDE FOR EFFECTIVE EROSION CONTROL, ADDITIONAL EROSION AND SEDIMENT CONTROL MEASURES SHALL BE IMPLEMENTED TO CONTROL OR TREAT THE SEDIMENT SOURCE.
7. ANY DISTURBED AREA LEFT EXPOSED FOR A PERIOD GREATER THAN 14 DAYS SHALL BE STABILIZED WITH MULCH OR TEMPORARY SEEDING.

INTERMEDIATE EROSION & SEDIMENTATION CONTROL NOTES:

1. CONTRACTOR SHALL INSTALL CONCRETE WASH AREA. CONCRETE WASH AREA SHALL BE USED FOR WASHDOWN OF TOOLS, CONCRETE MIXER CHUTES, HOPPERS AND REAR OF THE VEHICLES ONLY. WASHOUT OF THE DRUM AT THE CONSTRUCTION SITE IS PROHIBITED.
2. THE CONTRACTOR SHALL PROVIDE DUST CONTROL FOR THE PROJECT AREA AS NEEDED BASED ON PROJECT CONDITIONS.
3. THE CONTRACTOR SHALL PERFORM DAILY INSPECTIONS / MAINTENANCE OF ALL EROSION CONTROL BMPS. SEDIMENT LADEN RUNOFF SHALL BE CONTAINED AND TREATED ON SITE.
4. THE PRIMARY PERMITTEE WILL RETAIN ESG (THE DESIGN PROFESSIONAL) DURING ALL PHASES OF ESPC.
4. THE TOTAL ON-SITE DISTURBED AREA FOR THE INITIAL PHASE IS 0.24 ACRES.
5. THE TOTAL PROJECT DISTURBED AREA (INCLUDING ON-SITE AREAS) IS 1.10 ACRES.

SEDIMENT STORAGE CALCULATIONS:

REQUIRED SEDIMENT STORAGE:
67 CUBIC YARD PER ACRE DRAINED = 67 CY/AC * 1.10 AC = 74.0 CY

PROVIDED SILT FENCE: 670 LF TYPE C SILT FENCE & 1,030 LF TYPE A
PROVIDED SEDIMENT STORAGE (Sd1): 3.75 SF*670 LF + 1.88 SF*1,030 LF = 118.0 CY

THE TOTAL REQUIRED SEDIMENT STORAGE FOR THE INTERMEDIATE PHASE IS 74.0 CY. THE SEDIMENT STORAGE WILL BE PROVIDED BY THE SILT FENCE (Sd1).

STRUCTURAL PRACTICES

CODE	PRACTICE	DETAIL	MAP SYMBOL	DESCRIPTION
Co	CONSTRUCTION EXIT			A crushed stone pad located at the construction site exit to provide a place for removing mud from tires thereby protecting public streets.
CWA	CONCRETE WASHOUT AREA			A washdown area for tools, concrete mixer chutes, hoppers and rear of vehicles.
Sd1	SEDIMENT BARRIER			A barrier to prevent sediment from leaving the construction site. It may be sandbags, bales of straw or hay, brush, logs and poles, gravel, or a silt fence.
Sd2	INLET SEDIMENT TRAP			A temporary protective device formed at or around an inlet to a storm drain to trap sediment.

VEGETATIVE PRACTICES

CODE	PRACTICE	DETAIL	MAP SYMBOL	DESCRIPTION
Du	DUST CONTROL ON DISTURBED AREAS		Du	Controlling surface and air movement of dust on construction site, roadways and similar sites.
Ds1	DISTURBED AREA STABILIZATION (WITH MULCHING ONLY)		Ds1	Establishing temporary protection for disturbed areas where seedlings may not have a suitable growing season to produce an erosion retarding cover.
Ds2	DISTURBED AREA STABILIZATION (WITH TEMP. SEEDING)		Ds2	Establishing a temporary vegetative cover with fast growing seedings on disturbed areas.

* DISTURBED AREA NOTES

1. THE TOTAL PROJECT SITE IS 2.14 ACRES.
2. THE TOTAL ON-SITE DISTURBED AREA IS 0.86 ACRES (WELL SITE PROJECT).
3. THE TOTAL OFF-SITE DISTURBED AREA IS 0.24 ACRES (WATER MAIN EXTENSION).
4. THE TOTAL PROJECT DISTURBED AREA (INCLUDING ON- AND OFF-SITE AREAS) IS 1.10 ACRES.
5. DUE TO THE PROPOSED ESC/BMP MEASURES AND THE TYPE OF CONSTRUCTION BEING LINEAR, SHALLOW TRENCHING WORK, THE 0.24 ACRES OF "OFF-SITE" AREA IS NOT BEING CONSIDERED AS PART OF THE ON-SITE HYDROLOGY ANALYSIS DUE TO THE INFINITE NUMBER OF FLOW PATHS FOR RUNOFF LEAVING THE LINEAR AREAS OF THE PROJECT. THEREFORE, THE TRUE "ON-SITE" DISTURBED AREA IS ONLY 0.86 ACRES AND DOES NOT REQUIRE WATER QUALITY MITIGATION.

Ds1 Ds2
Du
ALL DISTURBED AREAS

IMPERVIOUS AREA CALCULATIONS:

PROJECT SITE: 2.14 AC - 0.70 AC (BUFFERS) = **1.44 AC**
DISTURBED AREA (ON SITE): 0.86 AC
IMPERVIOUS AREA = 1400 SF -> 0.032 AC / 1.44 AC = **2.2%**

DISTURBED AREA (OFF SITE): 0.24 AC -> **NO IMPERVIOUS AREA**

<50% GOOD
<15% GOOD

NRCS WEB SOIL SURVEY

SYMBOL	NAME	HYDROLOGIC SOIL GROUP	UNIFIED SOIL CLASSIFICATION	DEPTH
ApC	APPLING SANDY LOAM	B	Ap	0"-8"
			BA	8"-15"
			Bt	15"-42"
			BC	42"-55"
			C	55"-60"
PuD2	PACOLET SOILS	B	H1	0"-3"
			H2	3"-29"
			H3	29"-52"
			H4	52"-70"

APPENDIX 1 - IMPAIRED STREAM BMPS:

1. REDUCE THE TOTAL PLANNED SITE DISTURBANCE TO LESS THAN 50% IMPERVIOUS SURFACES (EXCLUDING ANY STATE-MANDATED BUFFER AREAS FROM SUCH CALCULATIONS). ALL CALCULATIONS MUST BE INCLUDED ON THE PLAN.
2. CONTRACTOR SHALL PROVIDE A LARGE (4'x8'), DURABLE, WEATHERPROOF SIGN ON SITE AT THE CONSTRUCTION ENTRANCE IN ACCORDANCE WITH APPENDIX 1, ITEM "D" ON SHEET C7.0 (SEE SIGN DETAIL ON SHEET C7.1).
3. USE FLOCCULENTS OR COAGULANTS AND/OR MULCH TO STABILIZE AREAS LEFT DISTURBED FOR MORE THAN SEVEN (7) CALENDAR DAYS IN ACCORDANCE WITH PART III D.1 OF THE CURRENT NPDES PERMITS.
4. LIMIT THE TOTAL PLANNED SITE DISTURBANCE TO LESS THAN 15% IMPERVIOUS SURFACES (EXCLUDING ANY STATE MANDATED BUFFER AREAS FROM SUCH CALCULATIONS). ALL CALCULATIONS MUST BE INCLUDED IN THE PLAN.

30' 15' 0' 30'
GRAPHIC SCALE 1" = 30'

GSWCC GEORGIA SOIL AND WATER CONSERVATION COMMISSION
Delmas S Crisp III
LEVEL II CERTIFIED DESIGN PROFESSIONAL
CERTIFICATION NUMBER: 0000100336
ISSUED: 11/08/2025 EXPIRES: 11/08/2028

GEORGIA811 www.Georgia811.com

ESG ENGINEERING
6400 Peake Rd
Macon, GA 31210
Ph: (478) 474-4996
Fax: (478) 474-5045

GROUNDWATER WELLS #4 & #5

FOR THE
CITY OF FLOWERY BRANCH

REVISIONS

NO.	DESCRIPTION	DATE
1	ESPC SHEETS	11-7-25
2	BID SET OF PLANS	12-1-25
3	REVISED WITH CITY COMMENTS	12-5-25
4	ADDENDUM #1	12-8-25
5	ADDENDUM #2	12-11-25
6	ADDENDUM #3	12-12-25
7	REVISED WITH CITY COMMENTS	12-17-25

CONFORMED SET

GEORGIA REGISTERED No. PE046341 PROFESSIONAL ENGINEER ANDREW D SWICEGOOD

DRAWN BY: DSC
CHECKED BY: ADS
DATE: OCT 2025
SCALE: SEE SCALE

CONTENT:

CIVIL:
INTERMEDIATE ESCP - WATER MAIN EXTENSION

SHEET NO: 23 7
C8.4

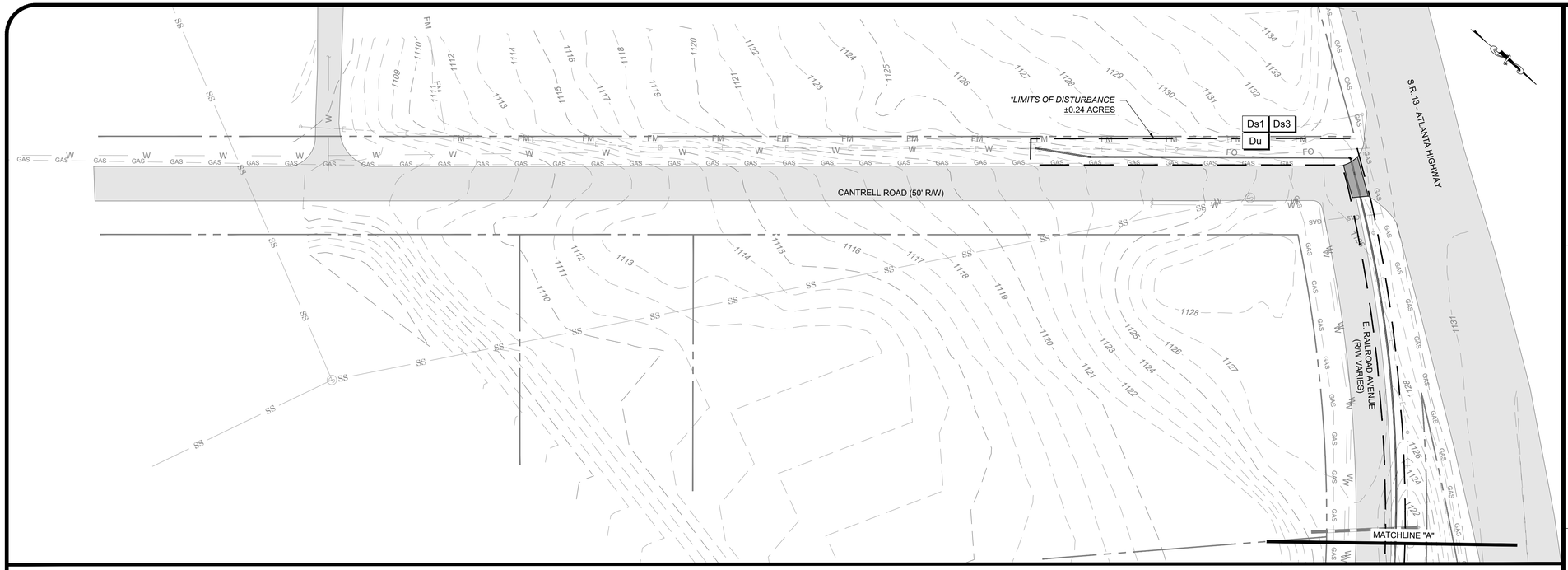

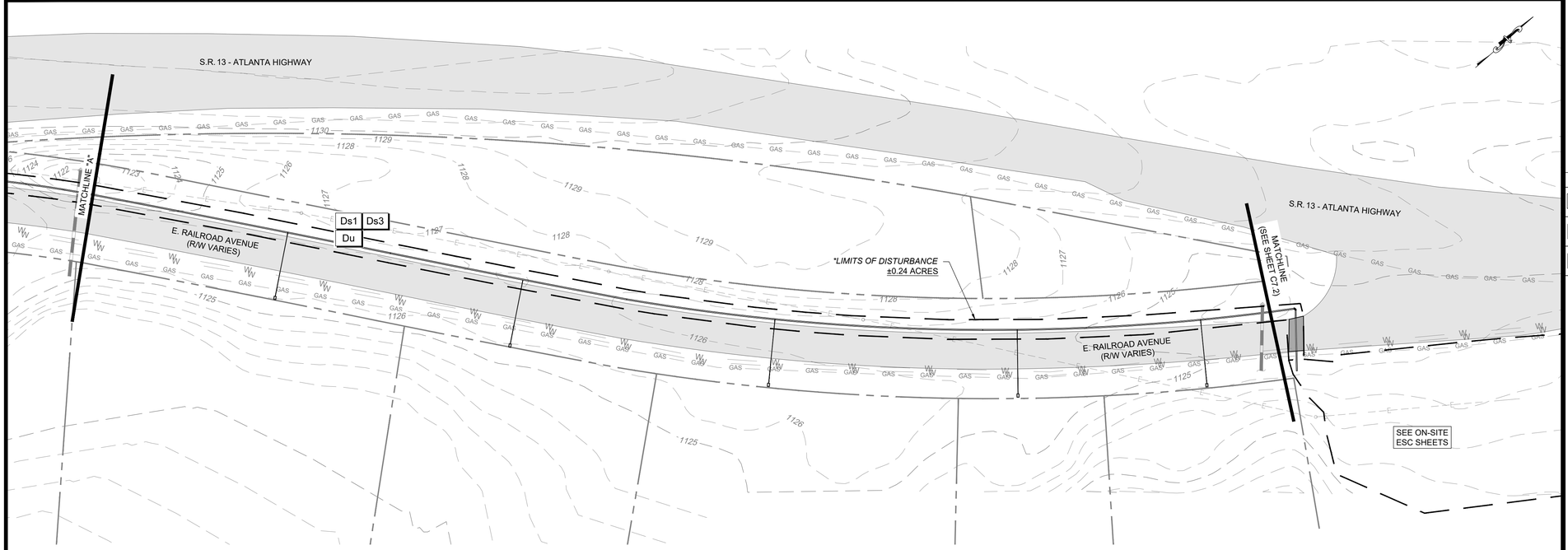

SITE INFORMATION	
PROJECT ADDRESS	4745 ATLANTA HWY
PARCEL NUMBER	08098 001001 THRU 08098 001004
PARCEL ZONING	H-B
PROJECT AREA	2.14 ACRES
BUILDING SETBACK	
FRONT	NONE
REAR	30'
SIDE	10'
LANDSCAPE SETBACK	
FRONT	10'
REAR	30'
SIDE	NONE

EROSION, SEDIMENTATION, & POLLUTION CONTROL STATEMENTS:

1. THE DESIGN PROFESSIONAL WHO PREPARED THE ES&PC PLAN IS TO INSPECT AND CERTIFY THE INSTALLATION OF THE INITIAL SEDIMENT STORAGE REQUIREMENTS AND PERIMETER CONTROL BMPS WITHIN 7 DAYS AFTER INSTALLATION.
2. NON-EXEMPT ACTIVITIES SHALL NOT BE CONDUCTED WITHIN THE 25 OR 50-FOOT UNDISTURBED STREAM BUFFERS AS MEASURED FROM THE POINT OF WRESTED VEGETATION OR WITHIN 25-FEET OF THE COASTAL MARSHLAND BUFFER AS MEASURED FROM THE JURISDICTIONAL DETERMINATION LINE WITHOUT FIRST ACQUIRING THE NECESSARY VARIANCES AND PERMITS.
3. AMENDMENTS/REVISIONS TO THE ES&PC PLAN WHICH HAVE A SIGNIFICANT EFFECT ON BMPS WITH A HYDRAULIC COMPONENT MUST BE CERTIFIED BY THE DESIGN PROFESSIONAL.
4. WASTE MATERIALS SHALL NOT BE DISCHARGED TO WATERS OF THE STATE, EXCEPT AS AUTHORIZED BY A SECTION 404 PERMIT.
5. THE ESCAPE OF SEDIMENT FROM THE SITE SHALL BE PREVENTED BY THE INSTALLATION OF EROSION AND SEDIMENT CONTROL MEASURES AND PRACTICES PRIOR TO LAND DISTURBING ACTIVITIES.
6. EROSION CONTROL MEASURES WILL BE MAINTAINED AT ALL TIMES. IF FULL IMPLEMENTATION OF THE APPROVED PLAN DOES NOT PROVIDE FOR EFFECTIVE EROSION CONTROL, ADDITIONAL EROSION AND SEDIMENT CONTROL MEASURES SHALL BE IMPLEMENTED TO CONTROL OR TREAT THE SEDIMENT SOURCE.
7. ANY DISTURBED AREA LEFT EXPOSED FOR A PERIOD GREATER THAN 14 DAYS SHALL BE STABILIZED WITH MULCH OR TEMPORARY SEEDING.

FINAL EROSION & SEDIMENTATION CONTROL NOTES:

1. CONTRACTOR SHALL INSTALL CONCRETE WASH AREA. CONCRETE WASH AREA SHALL BE USED FOR WASHDOWN OF TOOLS, CONCRETE MIXER CHUTES, HOPPERS AND REAR OF THE VEHICLES ONLY. WASHOUT OF THE DRUM AT THE CONSTRUCTION SITE IS PROHIBITED.
2. THE CONTRACTOR SHALL REMOVE ALL TEMPORARY BMPS ONCE FINAL STABILIZATION HAS BEEN MET.
3. THE CONTRACTOR SHALL PERFORM DAILY INSPECTIONS / MAINTENANCE OF ALL EROSION CONTROL BMPS. SEDIMENT LADEN RUNOFF SHALL BE CONTAINED AND TREATED ON SITE.
4. THE PRIMARY PERMITTEE WILL RETAIN THE DESIGN PROFESSIONAL DURING THE INTERMEDIATE GRADING AND DRAINAGE BMP PHASE, AS WELL AS THE FINAL BMP PHASE.
4. THE TOTAL ON-SITE DISTURBED AREA FOR THE INITIAL PHASE IS 0.24 ACRES.
5. THE TOTAL PROJECT DISTURBED AREA (INCLUDING ON-SITE AREAS) IS 1.10 ACRES.

VEGETATIVE PRACTICES

CODE	PRACTICE	DETAIL	MAP SYMBOL	DESCRIPTION
Ds1	DISTURBED AREA STABILIZATION (WITH MULCHING ONLY)		Ds1	Establishing temporary protection for disturbed areas where seedlings may not have a suitable growing season to produce an erosion retarding cover.
Ds3	DISTURBED AREA STABILIZATION (WITH PERM SEEDING)		Ds3	Establishing a permanent vegetative cover such as trees, shrubs, vines, grasses, or legumes on disturbed areas.
Du	DUST CONTROL ON DISTURBED AREAS		Du	Controlling surface and air movement of dust on construction site, roadways and similar sites.

* DISTURBED AREA NOTES

1. THE TOTAL PROJECT SITE IS 2.14 ACRES.
2. THE TOTAL ON-SITE DISTURBED AREA IS 0.86 ACRES (WELL SITE PROJECT).
3. THE TOTAL OFF-SITE DISTURBED AREA IS 0.24 ACRES (WATER MAIN EXTENSION.
4. THE TOTAL PROJECT DISTURBED AREA (INCLUDING ON- AND OFF-SITE AREAS) IS 1.10 ACRES.
5. DUE TO THE PROPOSED ESC/BMP MEASURES AND THE TYPE OF CONSTRUCTION BEING LINEAR, SHALLOW TRENCHING WORK, THE 0.24 ACRES OF "OFF-SITE" AREA IS NOT BEING CONSIDERED AS PART OF THE ON-SITE HYDROLOGY ANALYSIS DUE TO THE INFINITE NUMBER OF FLOW PATHS FOR RUNOFF LEAVING THE LINEAR AREAS OF THE PROJECT. THEREFORE, THE TRUE "ON-SITE" DISTURBED AREA IS ONLY 0.86 ACRES AND DOES NOT REQUIRE WATER QUALITY MITIGATION.

Ds1 Ds3
Du
ALL DISTURBED AREAS

IMPERVIOUS AREA CALCULATIONS:

PROJECT SITE: 2.14 AC - 0.70 AC (BUFFERS) = **1.44 AC**
DISTURBED AREA (ON SITE): 0.86 AC
IMPERVIOUS AREA = 1400 SF -> 0.032 AC / 1.44 AC = **2.2%**

DISTURBED AREA (OFF SITE): 0.24 AC -> **NO IMPERVIOUS AREA**

<50% GOOD
<15% GOOD

NRCS WEB SOIL SURVEY

SYMBOL	NAME	HYDROLOGIC SOIL GROUP	UNIFIED SOIL CLASSIFICATION	DEPTH
ApC	APPLING SANDY LOAM	B	Ap	0"-8"
			BA	8"-15"
			Bt	15"-42"
			BC	42"-55"
			C	55"-60"
PuD2	PACOLET SOILS	B	H1	0"-3"
			H2	3"-29"
			H3	29"-52"
			H4	52"-70"

APPENDIX 1 - IMPAIRED STREAM BMPS:

1. REDUCE THE TOTAL PLANNED SITE DISTURBANCE TO LESS THAN 50% IMPERVIOUS SURFACES (EXCLUDING ANY STATE-MANDATED BUFFER AREAS FROM SUCH CALCULATIONS). ALL CALCULATIONS MUST BE INCLUDED ON THE PLAN.
2. CONTRACTOR SHALL PROVIDE A LARGE (4'x8'), DURABLE, WEATHERPROOF SIGN ON SITE AT THE CONSTRUCTION ENTRANCE IN ACCORDANCE WITH APPENDIX 1, ITEM "D" ON SHEET C7.0 (SEE SIGN DETAIL ON SHEET C7.1).
3. USE FLOCCULENTS OR COAGULANTS AND/OR MULCH TO STABILIZE AREAS LEFT DISTURBED FOR MORE THAN SEVEN (7) CALENDAR DAYS IN ACCORDANCE WITH PART III D.1 OF THE CURRENT NPDES PERMITS.
4. LIMIT THE TOTAL PLANNED SITE DISTURBANCE TO LESS THAN 15% IMPERVIOUS SURFACES (EXCLUDING ANY STATE MANDATED BUFFER AREAS FROM SUCH CALCULATIONS). ALL CALCULATIONS MUST BE INCLUDED IN THE PLAN.

30' 15' 0' 30'
GRAPHIC SCALE 1" = 30'

GSWCC GEORGIA SOIL AND WATER CONSERVATION COMMISSION
Delmas S Crisp III
LEVEL II CERTIFIED DESIGN PROFESSIONAL
CERTIFICATION NUMBER: 0000100336
ISSUED: 11/08/2025 EXPIRES: 11/08/2028

GEORGIA811 www.Georgia811.com

ESG ENGINEERING
6400 Peake Rd
Macon, GA 31210
Ph: (478) 474-4996
Fax: (478) 474-5045

GROUNDWATER WELLS #4 & #5

FOR THE
CITY OF FLOWERY BRANCH

REVISIONS

NO.	DESCRIPTION	DATE
1	ESPC SHEETS	11-7-25
2	BID SET OF PLANS	12-1-25
3	REVISED WITH CITY COMMENTS	12-5-25
4	ADDENDUM #1	12-8-25
5	ADDENDUM #2	12-11-25
6	ADDENDUM #3	12-12-25
7	REVISED WITH CITY COMMENTS	12-17-25

CONFORMED SET

GEORGIA REGISTERED No. PE046341 PROFESSIONAL ENGINEER ANDREW D SWICEGOOD

DRAWN BY: DSC
CHECKED BY: ADS
DATE: OCT 2025
SCALE: SEE SCALE

CONTENT:

CIVIL:
FINAL ESCP - WATER MAIN EXTENSION

SHEET NO: 2 3 7
C8.5

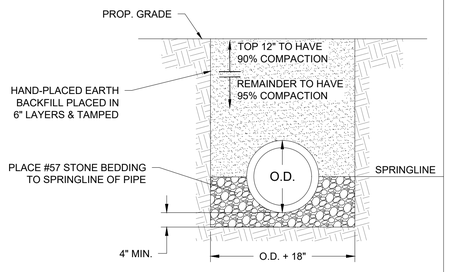

NOTES:

1. WHEN POOR BEDDING SOIL IS ENCOUNTERED, REMOVE UNSUITABLE SOIL TO REQUIRED DEPTH AND BACKFILL WITH AN APPROVED AGGREGATE MATERIAL PRIOR TO LAYING PIPE. BACKFILL SHALL BE PLACED IN 6" LIFTS WITH EACH LAYER TAMPED TO 95% COMPACTION.
2. TRENCH SHALL BE EXCAVATED TO THE DEPTH REQUIRED, PROVIDING A UNIFORM AND CONTINUOUS BEARING AND SUPPORT FOR THE PIPE ON SOLID, UNDISTURBED GROUND AT EVERY POINT.
3. IN PERVIOUS AREAS (SUCH AS ROAD SHOULDERS) EXTEND BACKFILL TO SURFACE AND PLACE SEEDING/GRASSING. SEE PAVEMENT REPLACEMENT DETAIL FOR INSTALLATION UNDER PAVEMENT.

TYPICAL PIPE BEDDING & BACKFILL DETAIL
NOT TO SCALE

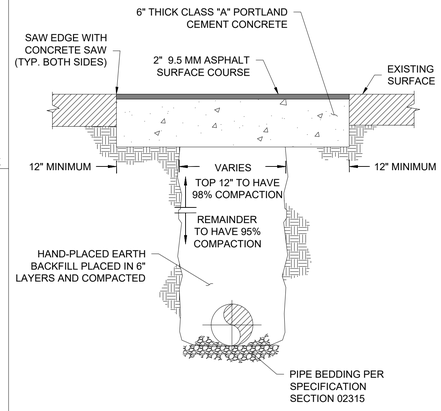

PAVEMENT REPLACEMENT DETAIL
NOT TO SCALE

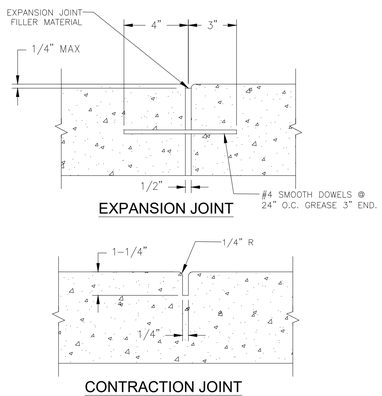

NOTES:

1. CONTRACTION JOINTS SHALL BE REQUIRED IN THE CONCRETE SIDEWALK AT 5' INTERVALS.

CONCRETE CONSTRUCTION JOINT DETAIL
NOT-TO-SCALE

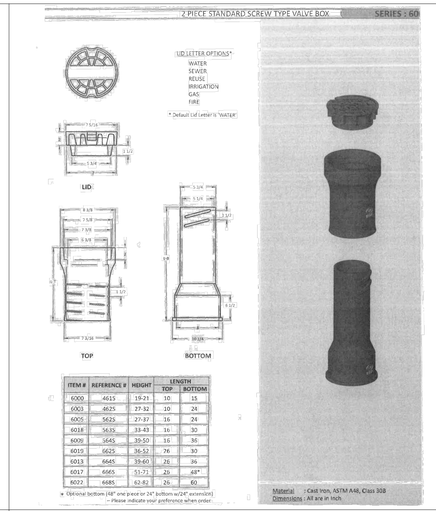

ITEM #	REFERENCE #	HEIGHT	LENGTH	
			TOP	BOTTOM
6000	4615	19-21	10	15
6003	4625	27-32	10	24
6005	5625	27-37	16	24
6018	5635	33-43	16	30
6009	5645	39-50	16	36
6015	6625	36-52	76	30
6013	6645	59-60	28	36
6017	6665	51-71	28	48*
6027	6685	62-82	26	60

* Optional bottom (48" one piece or 24" bottom w/24" extension) -- Please indicate your preference when order.

VALVE RISER DETAIL
NOT-TO-SCALE

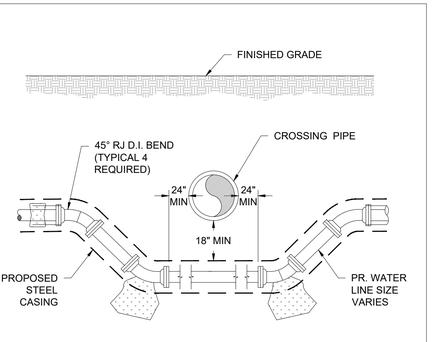

NOTES:

1. ALL FITTINGS SHALL BE PROPERLY BLOCKED OR TIE-RODDED AS REQUIRED TO ENSURE SUFFICIENT ANCHORAGE OF THE PIPING.
2. PROVIDE SUFFICIENT BACKFILL AND COMPACTION OVER WATER LINE TO ENSURE PROTECTION OF THE PIPE.

WATER LINE CONFLICT DETAIL
NOT TO SCALE

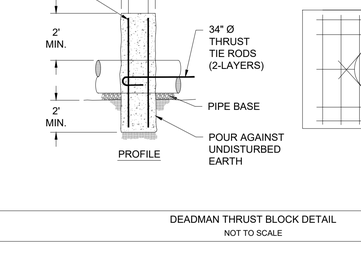

BOLLARD DETAIL
NOT TO SCALE

SERVICE CONNECTION DETAIL
NOT TO SCALE

GRAVEL SITE PAD & ACCESS DRIVE
NOT TO SCALE

SANITARY SEWER CLEANOUT DETAIL
NOT TO SCALE

2'-0" STANDARD CURB & GUTTER

1'-6" PLANTED CURB

TO BE USED WHEN SEPARATING DIFFERENT TYPES OF SURFACES OR PAVING TYPES AS SPECIFIED BY THE ENGINEER.

CURB AND GUTTER DETAILS
NOT TO SCALE

TIE ROD SCHEDULE		
PIPE DIAMETER (IN.)	TIE RODS DIAMETER (IN.)	NUMBER REQUIRED
3	3/4	2
4	3/4	2
6	3/4	3
8	3/4	3
10	3/4	4
12	3/4	4

DEADMAN THRUST BLOCK DETAIL
NOT TO SCALE

1. THRUST BLOCK BEARING AREAS SHALL BE POURED AGAINST UNDISTURBED MATERIALS WHERE TRENCH WALL HAS BEEN DISTURBED, EXCAVATE ALL LOOSE MATERIAL AND EXTEND TO UNDISTURBED MATERIAL.
2. EXTEND THRUST BLOCK FULL LENGTH OF FITTINGS. PUT BOARD IN FRONT OF PLUG BEFORE POURING CONCRETE. JOINTS SHALL NOT BE COVERED BY THRUST BLOCK.
3. ROUGH BLOCKING FORMS SHALL BE USED ALONG SIDES OF THRUST BLOCK.
4. THRUST BLOCKS SHALL BE USED IN COMBINATION, AS REQUIRED, TO SUIT THE SPECIFIC FITTINGS ARRANGEMENT.
5. ALTERNATE DESIGN RESTRAINING SYSTEM SHALL BE PROVIDED WHERE STANDARD THRUST BLOCKING IS NOT SUITABLE, AND/OR SOIL BEARING CAPACITY IS LESS THAN 2,000 P.S.F. OR PIPE IS 16 INCHES OR GREATER.
6. ALL WOOD BLOCKING SHALL BE PRESSURE TREATED WITH PRESERVATIVES.
7. THRUST BLOCK AND RESTRAINING SEWER AND WATER MAIN SCHEDULES SHALL BE COMPLETED BY THE ENGINEER, BASED ON ALL DESIGN CONSIDERATIONS INCLUDING, BUT NOT LIMITED TO THE FOLLOWING: PIPE TYPE, SOIL BEARING CAPACITY, SOIL TYPE, DEPTH OF COVER, TEST PRESSURE, LAYING CONDITIONS AND SAFETY FACTOR.
8. STEEL REINFORCEMENT FOR "DEAD-MAN" SHALL BE DETERMINED BY ENGINEER.
9. CONCRETE THRUST BLOCKING SHALL HAVE A MIN. COMPRESSION STRENGTH OF 2500 PSI.
10. CONCRETE SHALL BE PLACED AGAINST UNDISTURBED MATERIAL AND SHALL NOT COVER JOINTS, BOLTS OR NUTS OR INTERFERE WITH REMOVAL OF ANY JOINT. WOODEN SIDE FORMS SHALL BE PROVIDED FOR THRUST BLOCKS WHERE TRENCH CONDITIONS REQUIRE.
11. THRUST BLOCKS SHALL BE PROPERLY SET AND ADEQUATELY CURED PRIOR TO PRESSURIZING THE PIPE.
12. FITTINGS SHALL BE PROTECTED BY POLYETHYLENE FILM, MIN. 8 MIL. THICK, PRIOR TO PLACING CONCRETE THRUST BLOCK.

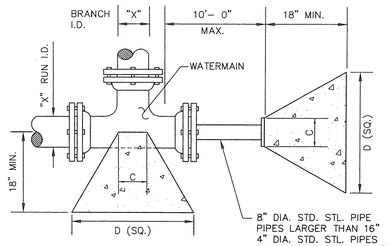

BENDS				TEES AND DEAD ENDS		
ANGLE	X	C	D	X	C	D
90°	4"	6"	1'-2"	4"	8"	1'-6"
	6"	8"	1'-10"	6"	10"	1'-9"
	8"	9"	2'-4"	8"	12"	2'-0"
	10"	11"	3'-0"	10"	14"	2'-6"
	12"	12"	3'-6"	12"	16"	3'-0"
45°	4"	6"	1'-0"			
	6"	8"	1'-4"			
	8"	9"	1'-10"			
	10"	11"	2'-2"			
	12"	12"	2'-8"			
22-1/2°	4"	6"	1'-0"			
	6"	8"	1'-0"			
	8"	9"	1'-4"			
	10"	11"	1'-8"			
	12"	12"	1'-10"			
11-1/4°	4"	6"	1'-0"			
	6"	8"	1'-0"			
	8"	9"	1'-0"			
	10"	11"	1'-2"			
	12"	12"	1'-4"			

CONCRETE THRUST BLOCK DETAIL
NOT TO SCALE

ESG ENGINEERING
6400 Peake Rd
Macon, GA 31210
Ph: (478) 474-4996
Fax: (478) 474-5045

GROUNDWATER WELLS #4 & #5
FOR THE
CITY OF FLOWERY BRANCH

REVISIONS

NO.	DESCRIPTION	DATE
1	ESPC SHEETS	11-7-25
2	REVISED WITH CITY COMMENTS	12-1-25

CONFORMED SET

GEORGIA REGISTERED No. PE046341 PROFESSIONAL ENGINEER ANDREW D SWICEGOOD

DRAWN BY: DSC
CHECKED BY: ADS
DATE: OCT 2025
SCALE: N.T.S.

CONTENT:
CONSTRUCTION DETAILS

SHEET NO:
C9.0

Last Saved By: Eleonard
Drawing Path: Z:\Engineer Projects\F0002 - FLOWERY BRANCH, CITY OF\Fxxxx.xxx Groundwater Well Restoration\Base\CAD\C0-COVER & DETAILS.dwg
Plotted: 12/2/2025 9:21 AM

Flange supports are to be factory fabricated units. No contractor fabricated supports are allowed. Material to be A36 steel with a galvanized finish unless indicated otherwise in specifications. Support design shall have been tested to withstand a minimum of 10,000 pounds compressive load. Test certification must be available. Supports shall be STANDON MODEL S89 as manufactured by -MATERIAL RESOURCES INC., FOREST GROVE, OR.503-533-5256 p, 503-533-5501 f

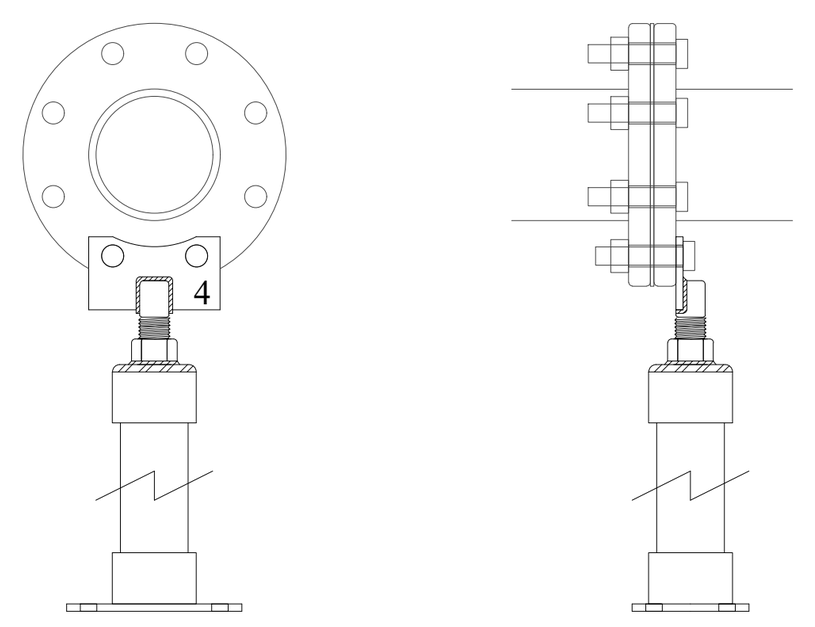

FLANGED PIPE SUPPORT DETAIL

NOT TO SCALE

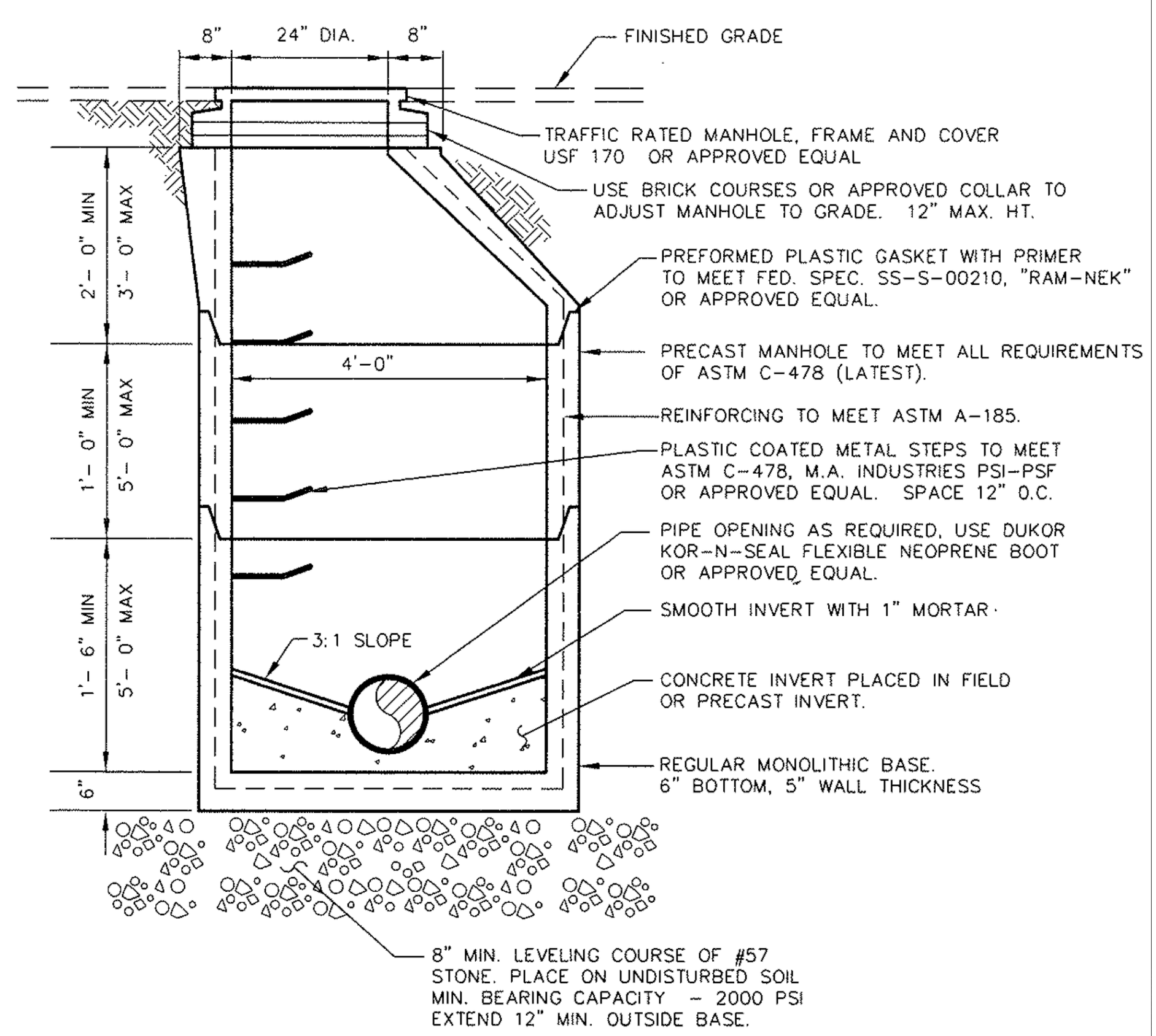

NOTE:
1. ALL MANHOLES SHALL BE ECCENTRIC CONE TYPE WITH VERITICAL SIDE. STEPS SHALL BE POSITIONED OVER INVERT SHELF AND AWAY FROM DROP CONNECTIONS.

STANDARD PRECAST MANHOLE DETAIL

NOT TO SCALE

ES-709DCDA

Engineering Specification

Job Name ______ Contractor ______
Job Location ______ Approval ______
Engineer ______ Contractor's P.O. No. ______
Approval ______ Representative ______

Series 709DCDA
Double Check Detector Assemblies
3" – 10"

Series 709DCDA Double Check Detector Assemblies are designed exclusively for use in accordance with water authority containment requirements. The series is mandatory to prevent the reverse flow of fire protection system substances, such as glycerin wetting agents, stagnant water, and water of non-potable quality from being pumped or siphoned into the potable water line. The valve body is fused with ArmorTek™ coating technology to resist corrosion due to microbial induced corrosion (MIC) or exposed metal substrate. All sizes are standardly equipped with resilient seated OSY shutoff valves, ⅝" x ¾" meter, and ball type test cocks.

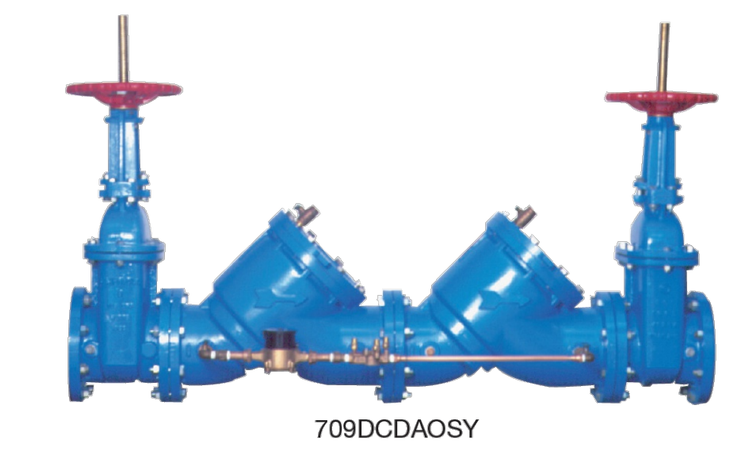

709DCDAOSY

Benefits
- Detects leaks, with emphasis on the cost of unaccountable water
- Incorporates a meter allowing the water utility to (1) detect leaks underground that historically create great annual cost due to waste and (2) provide a detection point for unauthorized use, helping locate illegal taps
- Modular check design concept facilitates maintenance and assembly access.

Features
- Body construction fused epoxy coated cast iron
- Replaceable bronze seats
- Maximum flow at low pressure drop
- Compact for economy combined with performance
- Design simplicity for easy maintenance
- Advanced ArmorTek™ coating technology to resist corrosion of internals
- Furnished with ⅝" x ¾" bronze meter
- No special tools required for servicing

Specification
A Double Check Detector Assembly shall be installed on fire protection systems when connected to a potable water supply. Degree of hazard present is determined by the local authority having jurisdiction. The unit shall be a complete assembly including UL Listed resilient seated OSY shutoff valves and test cocks. The unit shall be UL Classified and FM Approved with UL Classified and FM Approved OSY shutoff valves. The auxiliary line shall consist of an approved backflow preventer and water meter. The assembly shall meet the basic requirements of ASSE 1048; AWWA Std. C510 for Double Check Valves. The valve body shall utilize a coating system with built-in electrochemical corrosion inhibitor and microbial inhibitor. Approved by the Foundation for Cross-Connection Control and Hydraulic Research at the University of Southern California. Assembly shall be a Watts Series 709DCDA.

Check Assembly Module
The check assembly features a modular design concept that facilitates complete maintenance and assembly by retaining the spring load. The first and second check valve spring modules are not interchangeable.

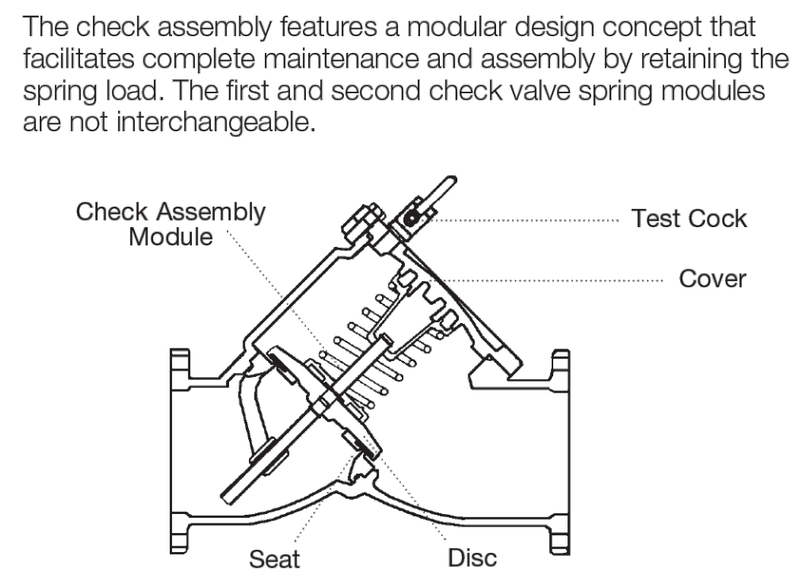

Now Available
WattsBox Insulated Enclosures
For more information, download ES-WB.

NOTICE

The information contained herein is not intended to replace the full product installation and safety information available or the experience of a trained product installer. You are required to thoroughly read all installation instructions and product safety information before beginning the installation of this product.

Inquire with governing authorities for local installation requirements.

Watts product specifications in U.S. customary units and metric are approximate and are provided for reference only. For precise measurements, please contact Watts Technical Service. Watts reserves the right to change or modify product design, construction, specifications, or materials without prior notice and without incurring any obligation to make such changes and modifications on Watts products previously or subsequently sold.

WATTS

*IDENTICAL OR EQUIVALENT QUALITY SUBSTITUTION ALLOWED

Materials

Body:	Epoxy coated cast iron
Seat:	Bronze
Disc Holder:	Bronze
Trim:	Stainless steel
Check Valve Discs:	Rubber
Test Cocks:	Bronze
Coating:	ArmorTek™

Models
Suffix:

OSY	UL Classified and FM Approved outside stem and yoke resilient seated gate valves
CFM	Cubic feet per minute meter
GPM	Gallons per minute meter
LF	4" – 10" without shutoff valves

Pressure – Temperature
Temperature Range: 33°F – 110°F (0.5°C – 43°C) continuous, 140°F (60°C) intermittent

Maximum Working Pressure: 175 psi (12.1 bar)

Standards
AWWA Standard C510

Approvals
Approved by the Foundation for Cross-Connection Control and Hydraulic Research at the University of Southern California. Sizes 4" – 10" approved for horizontal and vertical "flow up." Size 3" approved for horizontal only.

FM Approved 4" – 10" vertical "flow up."

Dimensions – Weights

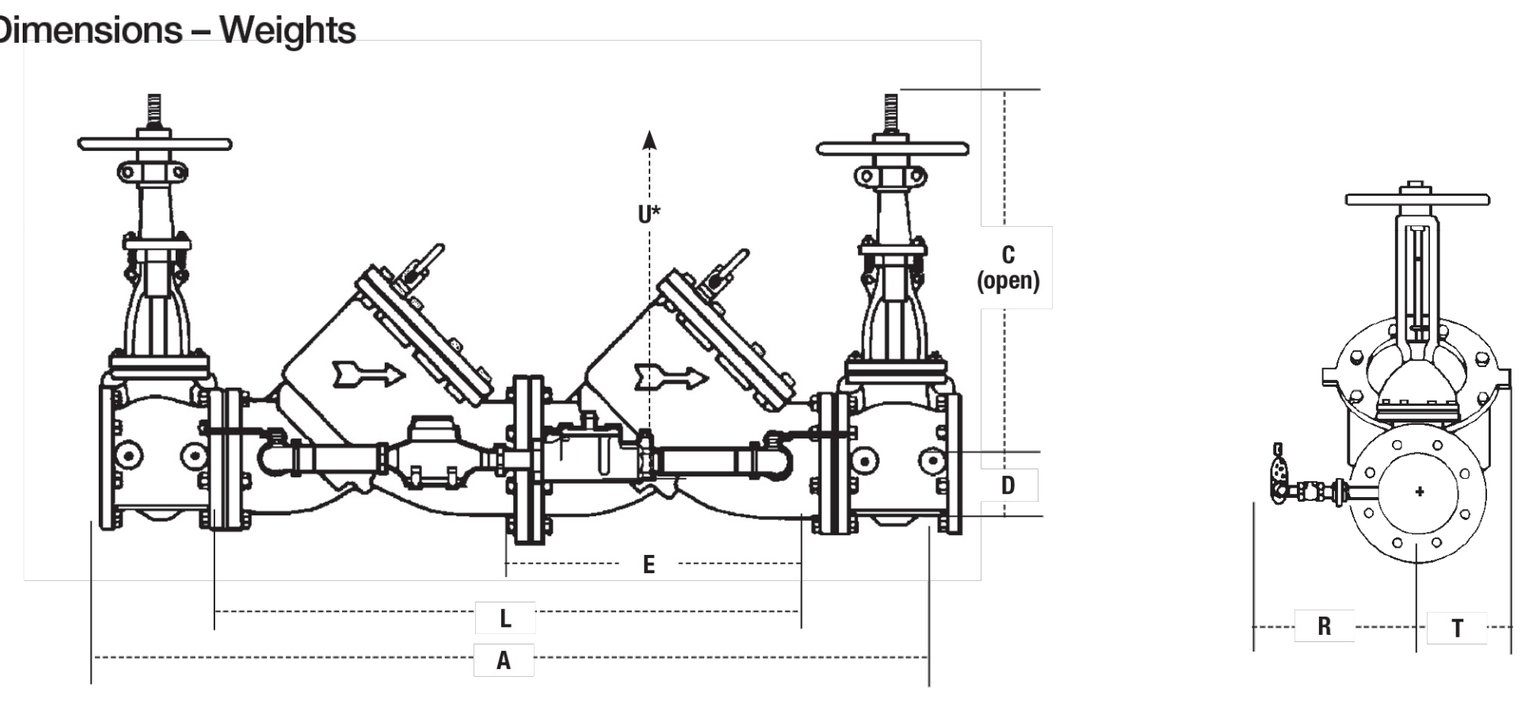

SIZE	DIMENSIONS																WEIGHT	
	A		C		D		E		L		R		T		U*		W/OSY† gates	
In.	*in.*	*mm*	*in.*	*mm*	*in.*	*mm*	*in.*	*mm*	*in.*	*mm*	*in.*	*mm*	*in.*	*mm*	*in.*	*mm*	*lb*	*kg*
3	40	1016	18⅞	479	3½	89	12	305	24	610	14	356	3	76	14	356	190	86
4	52	1321	22¾	578	3¾	95	17	432	34	864	15	381	6	152	14	356	403	183
6	62½	1588	30⅛	765	4½	114	21	533	41½	1054	16	406	7½	191	16	406	727	330
8	75	1905	37¾	959	5½	140	26	660	52	1321	17	432	9	229	21	533	1327	602
10	90	2286	45¾	1162	6½	165	32	813	64	1626	18	457	10¼	260	25	635	2093	949

* Service clearance for check assembly from center.
†UL Classified and FM Approved backflow preventers must include UL Classified and FM Approved OSY.

Capacity
*Rated flow
**UL rated flow

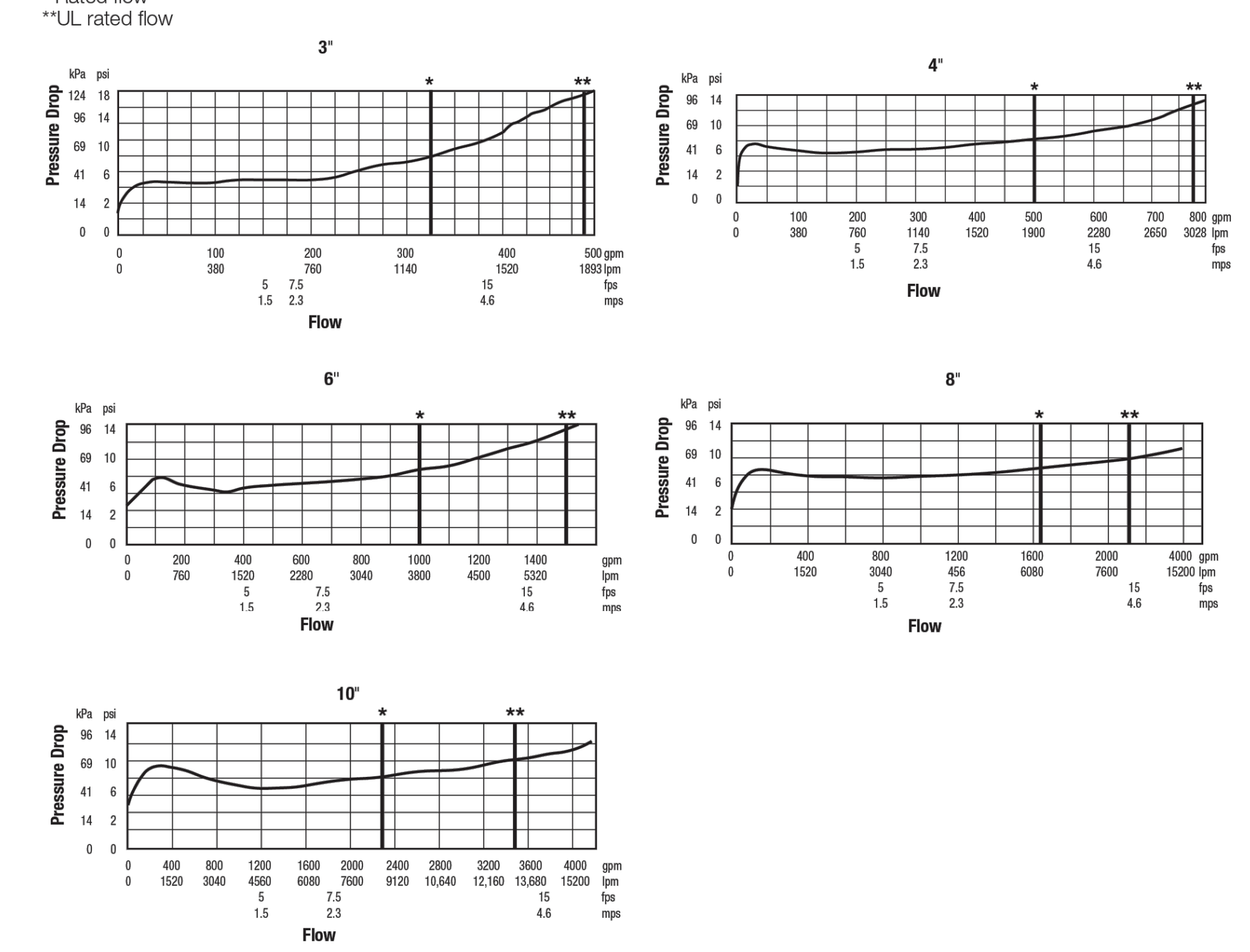

WATTS

USA: T: (978) 689-6066 • Watts.com
Canada: T: (888) 208-8927 • Watts.ca
Latin America: T: (52) 55-4122-0138 • Watts.com

ES-709DCDA 2240

© 2022 Watts

BACKFLOW DETAIL

NOT TO SCALE

Cordonel

Ultrasonic C&I water meter

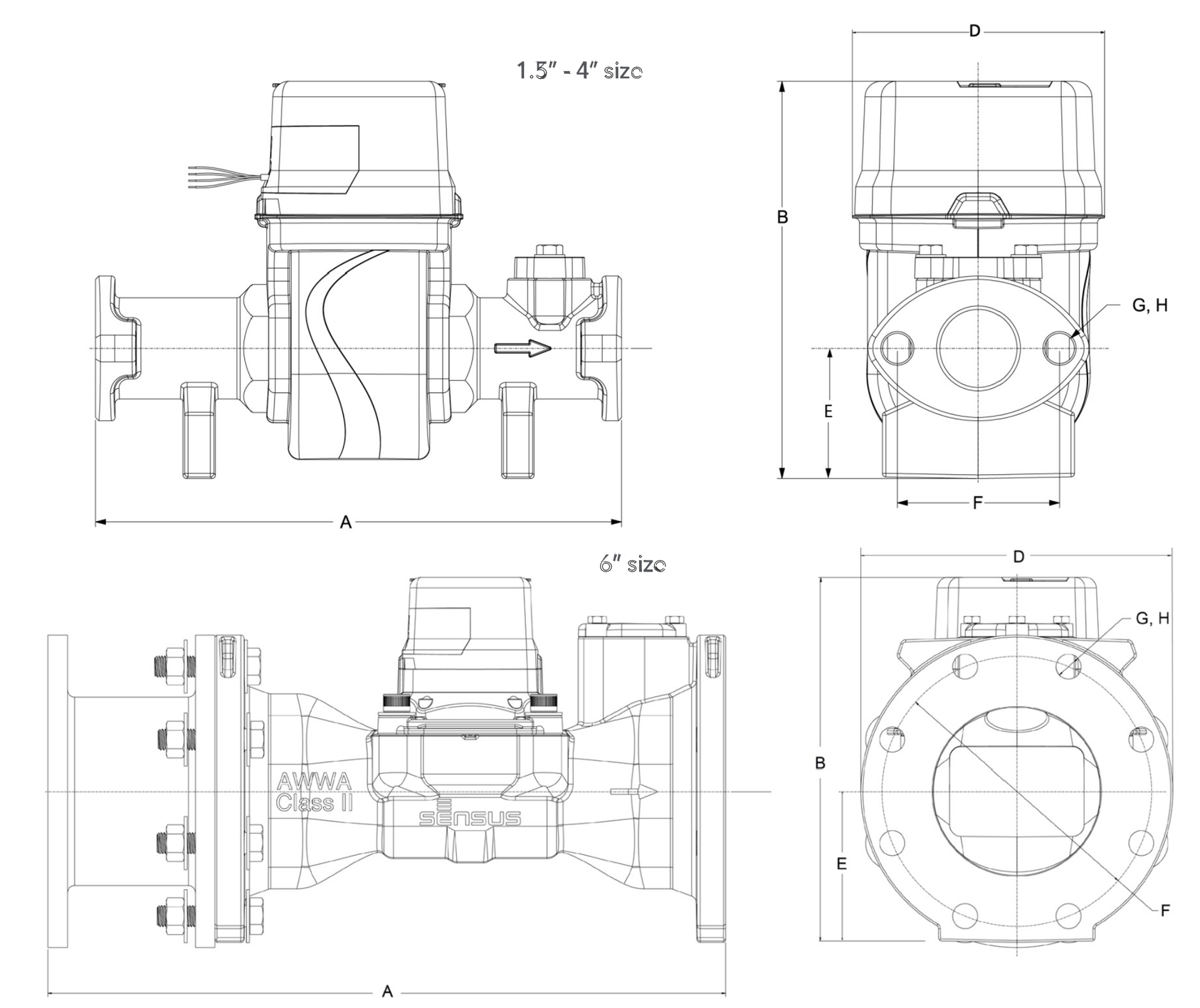

DIMENSIONS AND NET WEIGHTS

Size	A (lay length)	D (width)	B (Height)	E (Height to pipe axis)	F Bolt circle	G No. of bolts	H Bolt size	Net Weight
4" (DN 100 mm)	23" (584mm)	9" (229 mm)	12.2" (310mm)	4.37" (111 mm)	7.5" (191mm)	8	5/8"	79.81 lb (36.2 kg)
6" (150 mm)	27" (685mm)	11" (280 mm)	12.874" (327 mm)	5.31" (135 mm)	9.5" (241 mm)	8	3/4"	96.12 lb (43.6 kg)

FLOW METER DETAIL

NOT TO SCALE

ProSeries XTP™
Thermostatic Water Heater for Commercial and Industrial Applications

Specifications
Tankless Electric Water Heater

Applications
- Booster (up to 180°F)
- Recirculation loop*
- Washdown processes
- Commercial kitchens / utility sinks
- Kitchen, wet bar, utility sinks
- Mop sinks
- Dishwasher

Features
- Adaptive Stability Technology™ assesses the heater condition and shifts unit operation to ensure a consistent and reliable output
- Includes wall mounting bracket allowing for easy, flexible installation, reducing time and labor
- SafeStart™ engages upon start-up to avoid dry-fire occurrence
- 4-line, 20-character LED display delivers an enhanced user experience - display relays system status & operation feedback
- Built to last - constructed of powder-coated galvanized steel, stainless steel heat exchanger and sheathed copper heating elements, protecting the heater and minimizing the occurrence of rust and corrosion
- Self-diagnostics with intelligent controls actively protect heater in installed environment
- Flow activation at 0.5 GPM/ 1.89 LPM across product line
- Max flow of 20 GPM
- Fittings suit common plumbing connections (3/4" NPT)
- Temperature stability at +/- 1°F or +/- 0.6°C output
- High temperature limit switch enables safe operation
- Powered by three phase delta, capable of supporting locations serviced by three phase wye or three phase delta power
- Only one input water line, cold or hot, needed for installation
- Factory set to 120°F
- Compact size for flexible installation
- User adjustable turn on flow
- User adjustable temperature settings 60° - 180°F
- Inlet/outlet thermistors for precise temperature control
- Tamper resistant controls (hardware lockout)
- IP25-rated cover prevents water intrusion within the system (water run-off and minimal corrosion)

Optional Features (NEMA cabinet required)
- N4 (powder coated steel), N4X (304SS) N4X6 (316SS) enclosures
- Free standing legs
- Freeze protection for harsh climate, up to -30°F
- Non-fused or fused electrical disconnect
- GFCI
- Explosion proof – C1D2 Compliant, local certification required. Class Z purge and pressurization system provided with pressure switch for alarm controls. For classification other than C1D2 please contact the factory to discuss options.
- Siren and beacon - audible and visual alarm (C1D2 compliant when paired with explosion proof package)
- Display is visible regardless of NEMA cabinet selection

Product Specifications

Min. Operating Pressure:	35 PSI
Max. Operating Pressure:	150 PSI
Optimum Operating Pressure:	60-90 PSI

*When used in a recirculation application, please consult your Eemax representative for assistance from our Applications Engineering team.



Electrical configuration and requirements
All Eemax three phase units are custom made to order and as such, are non-returnable and non-refundable. Check your electrical supply, making sure all criteria for operating your Eemax water heater are met.

Eemax 480V and 208V Three Phase Units Delta Configuration
Requires: 3 Lives and 1 Ground (earth)



ProSeries XTP is compatible with both Delta and Wye electrical configuration requirements. When installing a ProSeries XTP to a Wye electrical configuration, the neutral leg is not used.

Intertek | NO LEAD* *The wetted surface of this product contacted by water contains less than 0.25% lead and meets NSF/ANSI 372 | Assembled In USA

Special Design Service
- Inquiries for units for unique applications are welcome. Call our Technical Service department at **1 800 543 6163.**
- Custom orders non-refundable

Suggested Specification
Tankless water heater shall be an Eemax model number ______________.

Factory installation in a ______(N4/N4X/N4X6) enclosure.

Enclosure to be fitted with the following features:

____ **FP**	Freeze protection (-30°F)
____ **EDS**	Non-fused disconnect
____ **FDS**	Fused disconnect
____ **EP**	Explosion proof (C1D2 compliant)
____ **GFCI**	True RMS GFCI with digital display and reset
____ **SK**	24" legs for free standing applications
____ **SB**	Siren and Beacon
____ **DC**	Dry contact
____ **ES**	Emergency stop - push button
EX68031-16	Disconnect Switch (see page 42-43) Note that this disconnect is applicable to NON-NEMA cabinet installations only

Tankless water heater must be constructed with NSF61 listed materials. Unit to accommodate vertical (upright) or horizontal mounting orientations. Heating element to be sheathed, copper cartridge style, designed for field replacement. Tankless water heater to use 4 line, 20 character LED digital display. Display to include selectable Celsius / Fahrenheit, inlet temperature, outlet temperature, and set point temperature. Display to be capable of relaying flow rate in gallons per minute or liters per minute. Diagnostic features to include error and fault code notifications via digital display. Control board to maintain error/fault history. Water heater must be protected by redundant safeties and to include integrated flow meter that will ensure accurate turn-on /turn-off flow rate. Unit shall have a 0.5 GPM turn on flow. Water heater shall modulate power to the heating elements to maintain a users elected output temperature between 60 - 180°F (subject to incoming water temperature). The unit shall be equipped with both computer controlled and electromechanical thermostat switches for high-limited temperature protection. Maximum operating pressure of 150 PSI. The water heater shall be fitted with 3/4" NPT fittings. Heater shall employ technology that engages upon start-up to avoid dry-fire occurrence. Unit shall be Eemax or approved equal.

Information and product specifications contained in this document are subject to change without notice. REV 2025

*IDENTICAL OR EQUIVALENT QUALITY SUBSTITUTION ALLOWED

ProSeries XTP™
Thermostatic Water Heater for Commercial and Industrial Applications

Specifications
Tankless Electric Water Heater

MODEL NUMBER	kW	AMPS PER PHASE	TURN ON (GPM)	RECOMMENDED WIRE SIZE (90° C/CU)	TEMPERATURE RISE °F 1.0 GPM	2.0 GPM	3.0 GPM	4.0 GPM	5.0 GPM	6.0 GPM	7.0 GPM	8.0 GPM	9.0 GPM	10.0 GPM
VOLTS 208														
XTP018208	18	50	0.5	8 AWG	123°	60°	40°	30°	24°	20°	17°	15°	13°	12°
XTP024208	24	67	0.5	4 AWG	†	82°	55°	41°	33°	27°	23°	20°	18°	16°
XTP032208	31.2	87	0.5	3 AWG	†	107°	71°	53°	43°	36°	30°	27°	24°	21°
VOLTS 480														
XTP016480	16	19	0.5	12 AWG	109°	55°	36°	27°	22°	18°	16°	14°	12°	11°
XTP020480	20	24	0.5	10 AWG	137°	68°	46°	34°	27°	23°	20°	17°	15°	14°
XTP024480	24	29	0.5	10 AWG	†	82°	55°	41°	33°	27°	23°	20°	18°	16°
XTP027480	27	33	0.5	8 AWG	†	92°	61°	46°	37°	31°	26°	23°	20°	18°
XTP036480	36	43	0.5	8 AWG	†	126°	84°	63°	51°	42°	36°	32°	28°	25°
XTP048480	48	58	0.5	8 AWG	†	†	109°	82°	66°	55°	47°	41°	36°	33°
XTP054480	54	65	0.5	6 AWG	†	†	123°	92°	74°	61°	53°	46°	41°	37°

† Temperature electronically limited to factory preset temperature.
"C" indicates evaluation and compliance to either Underwriters Laboratories (UL) or Intertek (ETL) under CAN/CSA-22.2 No. 64/No. 88.

Base Model Dimensions
Est. weight 36 lb. Designed for wall mounted installation.

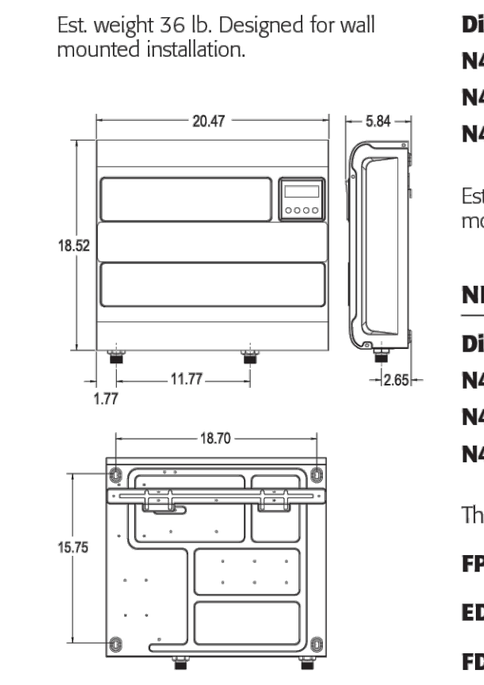

Wall Bracket Dimensions

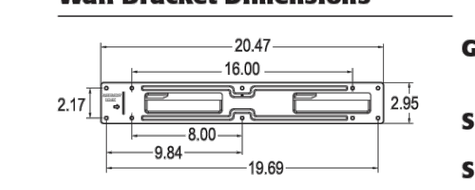

NEMA Cabinet Options*

Dimensions:	24"H x 30"W x 13.5"D
N4	Powder coated steel
N4X	Corrosion-resistant 304 stainless steel
N4X6	Corrosion-resistant 316 stainless steel

Est. total weight 130 lb. Designed for wall mounted installation.

NEMA Cabinet Options and Accessories

Dimensions:	36"H x 30"W x 17.3"D
N4	Powder coated steel
N4X	Corrosion-resistant 304 stainless steel
N4X6	Corrosion-resistant 316 stainless steel

These options require the large cabinet:

FP	Freeze protection (-30°F)
EDS	Non-fused disconnect
FDS	Fused disconnect
EP	Explosion proof purge kit and vent (C1D2 compliant)
GFCI	True RMS GFCI with digital display and reset
SK	24" legs for free standing applications
SB	Siren and Beacon
DC	Dry contact
ES	Emergency stop - push button

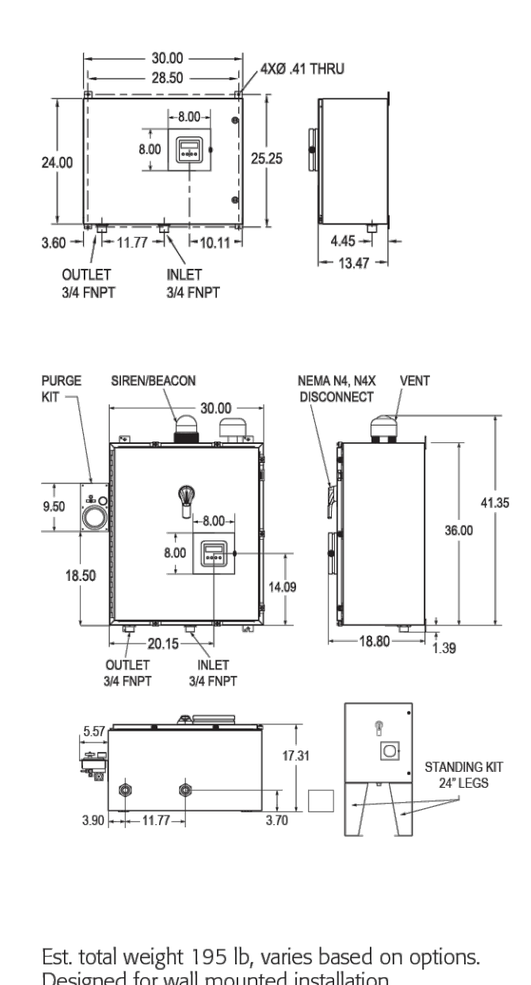

Est. total weight 195 lb, varies based on options. Designed for wall mounted installation. Free standing legs and other options available.

*Refer to page 47 of this specification guide for more details regarding selection.

Disconnect Switch Applications

EX68031-15	EX68031-16
XTP016480, XTP020480, XTP024480	XTP018208, XTP027480, XTP036480, XTP048480

Information and product specifications contained in this document are subject to change without notice. REV 2025

TANKLESS WATER HEATER DETAIL

NOT TO SCALE

ESG ENGINEERING

6400 Peake Rd
Macon, GA 31210
Ph: (478) 474-4996
Fax: (478) 474-5045

GROUNDWATER WELLS #4 & #5

FOR THE

CITY OF FLOWERY BRANCH

REVISIONS

NO.	DESCRIPTION	DATE
1	ESPC SHEETS	11-7-25
2	REVISED WITH CITY COMMENTS	12-1-25

CONFORMED SET



DRAWN BY: DSC
CHECKED BY: ADS
DATE: OCT 2025
SCALE: N.T.S.

CONTENT:
CONSTRUCTION DETAILS

SHEET NO:
C9.1

Last Saved By: Eleonard   Plotted: 12/2/2025 9:20 AM
Drawing Path: Z:\Engineer Projects\F0002 - FLOWERY BRANCH, CITY OF\Fxxxx.xxx Groundwater Well Restoration\Base\CAD\C0-COVER & DETAILS.dwg

Specifications
PFMB2424
Mop Basin
PROFLO

Product Features
· Molded, high-density composite basin
· Integral drain is molded into basin
· Gasket and stainless steel strainer included with the basin
· Designed to connect to 3" PVC drain pipe
· 10" Deep

Model Numbers

PFMB2424	24" x 24" Mop service basin with integral molded drain

Available Parts

PFMBSSDRN	3" Strainer and gasket for PFMB2424
PFBG24S	24" Stainless steel bumper guard
PFBG24V	24" Vinyl bumper guard
PFWG24S	24" Stainless steel wall guard set (Wall guard height: 12")
PF245	Mop hanger
PFSSHE	Service hose
PF296	Service hose bracket
PFMB32	QIC32. 3" x 2" pipe reducer gasket – for use with PFMB2424
PFMB3SN	QIC3SN. Gasket for 3" soil pipe – for use with PFMB2424



PFMB2424

Warranty and Codes
These products come complete with installation, operating, care and maintenance instructions. All PROFLO basins carry a 1-year limited warranty. These products meet or exceed ANSI Z124.2. In an effort to continually improve our products, we will make design changes from time to time. We reserve the right to ship newly designed product to fill any order unless we agree in writing to do otherwise.

FERGUSON.COM/PROFLO

*IDENTICAL OR EQUIVALENT QUALITY SUBSTITUTION ALLOWED

Specifications
PFMB2424
Mop Basin
PROFLO

Suggested Installation

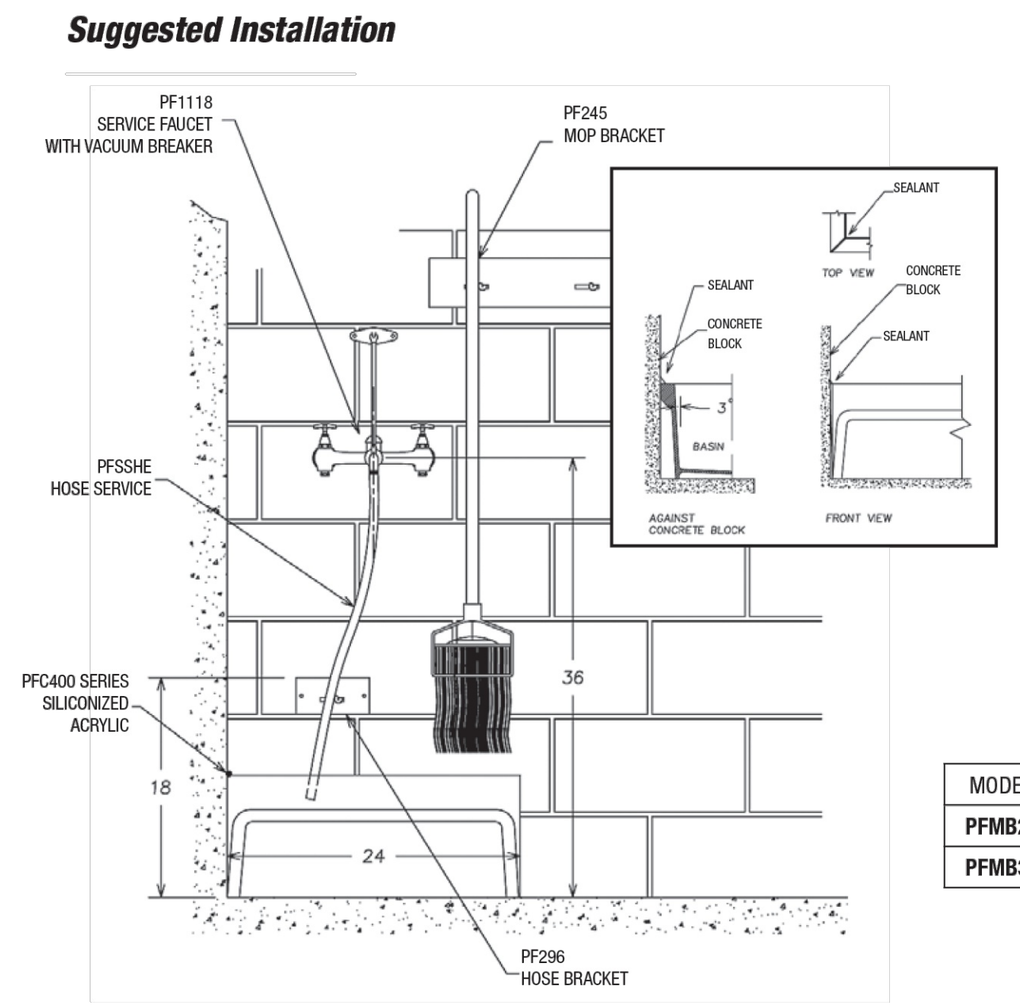

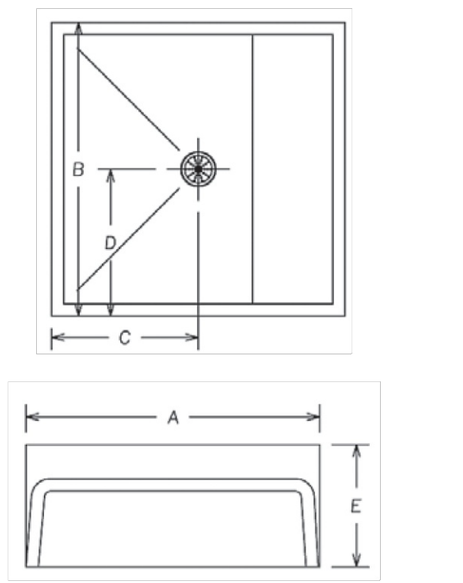

MODEL NO.	A	B	C	D	E
PFMB2424S	24-3/16"	24-3/16"	12"	12"	10"
PFMB3624S	36-3/16"	24-3/16"	18"	12"	10"

Rough-In Details Front View

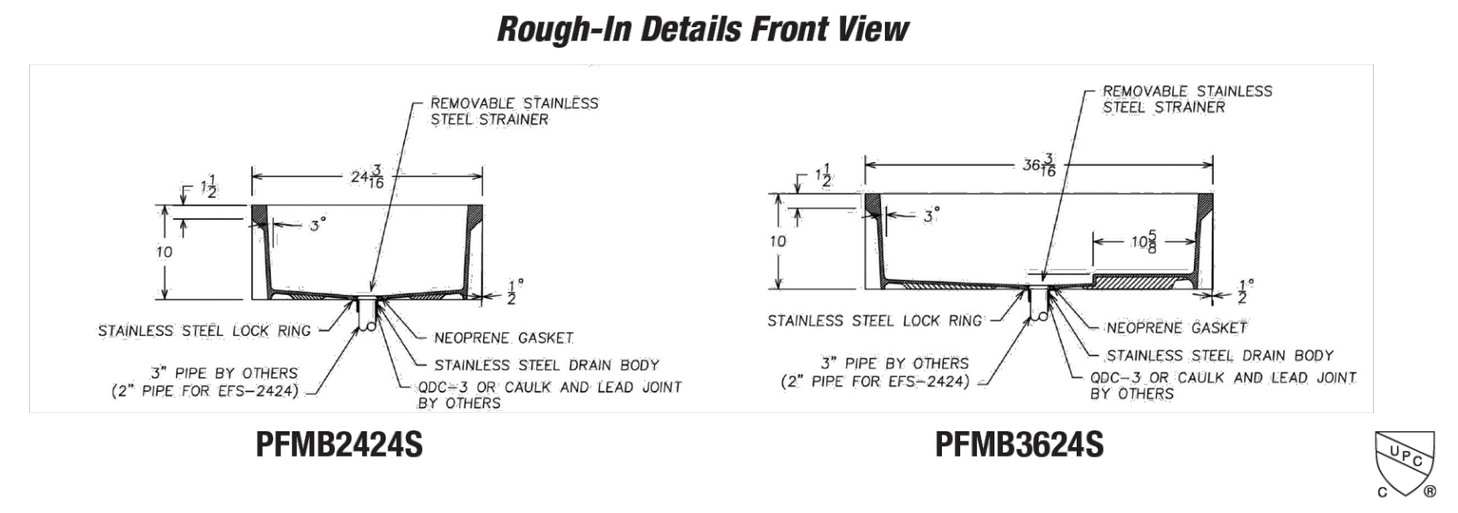

PFMB2424S PFMB3624S

©2024 Ferguson Enterprises, LLC 0124 6092747

FERGUSON.COM/PROFLO

MOP BASIN - SINK DETAIL
NOT TO SCALE

PRIER
C-634 Heavy Commercial Wall Hydrant
MasterSpec

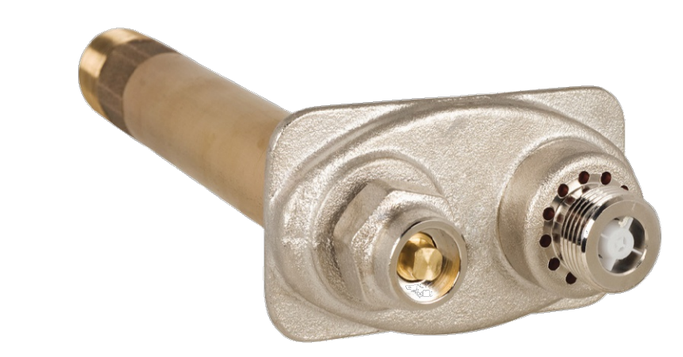

- Anti-Siphon
- Freezeless
- Commercial / Industrial
- Double Backflow Check Valve

With Integral P-004 Vacuum Breaker
PRIER C-634 provides a year round source of water to areas that are subject to freezing temperatures. The hydrant valve is connected to the supply piping in the heated portion of the structure, eliminating the possibility of freezing. To assure freeze protection, the hydrant will drain even with the hose attached and under pressure.

The integral vacuum breaker/backflow preventer provides protection against cross-connection with the potable water system, utilizing 2 check valves to prevent back pressure and a vacuum breaker to vent in the case of siphonage. This commercial wall hydrant is key operated, code approved, and flows up to 16 GPM. A removable operating key is provided to prevent unauthorized usage of the hydrant. No special installation tools are required.

FEATURES
- Field testable as required by ASSE 1052, pressure rated to 125 PSI, temperature to 140°
- Satin nickel plated body maintains an attractive finish
- Multiple vent holes ensure proper draining and reduce problems associated with insect nesting
- Patented PRIER "triple seal" positive shutoff system offers triple redundancy to assure shutoff
- High flow rate, 16 gallons per minute at 25 PSI differential
- Same key operates box lock and hydrant
- Tested to 250,000 cycles; designed to last the life of the plumbing system
- Heavy pattern cast brass hydrant for use with or without brass box or aluminum box
- Heavy duty brass piping, significantly stronger than copper, with threaded and sealed joints
- Simple, solderless design and solid non-ferrous operating rod for long wear life
- Design enables valve to be easily secured to any type of inner wall, utilizing the provided clamping ring
- Integral 3/8"-16 mounting lugs on box provide easy and secure installation.
- Round Box (RB1) installs through 6" hole or 6" Schedule 40 PVC sleeve
- Patented PRIER quick opening and modulating design requires less force and fewer turns to operate
- Gasket prevents water and air intrusion into the building

ORDERING
Wall Hydrant Only
C-634N10

Hose Thread Outlet
4- ¾" Garden Hose
6- 1" Hose

Inlet
N- 1" MPT x ¾" FPT
P- 1" Male SWT x ¾" Female SWT
V- ¾" Copper-Press Fitting Ready

Length
04- 4" Insertion
06- 6" Insertion
08- 8" Insertion
10- 10" Insertion
12- 12" Insertion
14- 14" Insertion
16- 16" Insertion
18- 18" Insertion
20- 20" Insertion
22- 22" Insertion
24- 24" Insertion
XX- Special Size



Handle
Add -HDL to end of part number to order handle

Optional Hydrant Box
C-634BX1



Box Finish
BX1- Satin Nickel Plated
BX2- Rough Brass
BX3- Aluminum
RB1- Round Box (Satin Nickel Plated)

C-634 Gasket
Included with C-634 hydrant boxes

Cylinder Lock
Add -CL to end of part number to order cylinder lock



4515 E. 139th Street Grandview, MO 64030 | (800) 362-9055 | PRIER.com

C-634-V

*IDENTICAL OR EQUIVALENT QUALITY SUBSTITUTION ALLOWED

C-634 REPLACEMENT PARTS AND STEMS

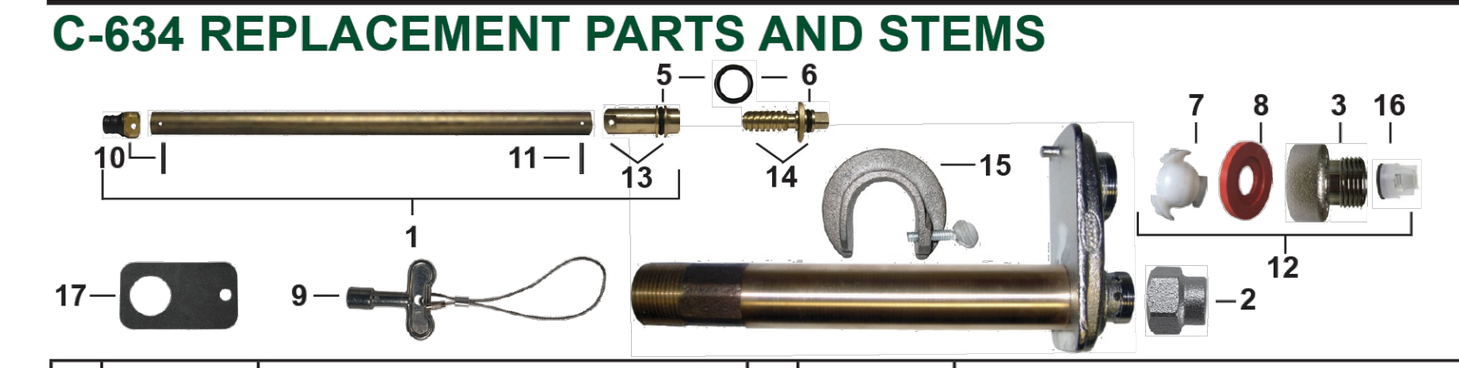

ID	Part No.	Description	ID	Part No.	Description
1	See Below	Stem Assembly, Contains: 5, 6, 10, 11, 13	5	336-0001	O-Ring Worm Sleeve
	P-231-0604	Stem for 4" C-634 Hydrant, 4 11/16" OAL	6	336-6001	O-Ring Worm Drive
	P-231-0606	Stem for 6" C-634 Hydrant, 6 11/16" OAL	7	337-6001	Check Spider-Vacuum Breaker
	P-231-0608	Stem for 8" C-634 Hydrant, 8 11/16" OAL	8	346-6001	Diaphragm-Vacuum Breaker
	P-231-0610	Stem for 10" C-634 Hydrant, 10 11/16" OAL	9	C-108KT-808	Loose Key on Lanyard
	P-231-0612	Stem for 12" C-634 Hydrant, 12 11/16" OAL	10	C-634KT-802	Stopper Kit, Includes Stopper and Pin, Contains: 5, 10
	P-231-0614	Stem for 14" C-634 Hydrant, 14 11/16" OAL	11	324-0004	Pin Only
	P-231-0616	Stem for 16" C-634 Hydrant, 16 11/16" OAL	12	C-634KT-806	Vacuum Breaker Assembly
	P-231-0618	Stem for 18" C-634 Hydrant, 18 11/16" OAL	13	C-634KT-808	Worm Sleeve with O-Ring, Pin and Tool
	P-231-0620	Stem for 20" C-634 Hydrant, 20 11/16" OAL	14	C-634KT-809	Worm Drive Assembly with O-Ring
	P-231-0622	Stem for 22" C-634 Hydrant, 22 11/16" OAL	15	C-634WCR	Wall Clamping Ring
	P-231-0624	Stem for 24" C-634 Hydrant, 24 11/16" OAL	16	399-0001	Secondary Check for ASSE 1052
2	300-6003	Valve Stem Cap (NP Brass)	17	346-0004	C-634 Gasket
3	300-6004	3/4" Hose Piece (NP Brass)		C-634KT-807	C-634 Overhaul Kit, Contains: 9, 10, 11, 12, 13, 14
	310-6009	1" Hose Piece for C-636 (NP Brass)			

For the old style C-634 Series wall hydrant stems, see C-634 Series retired style spec sheet at PRIER.com.

ROUGH-IN DIMENSIONS

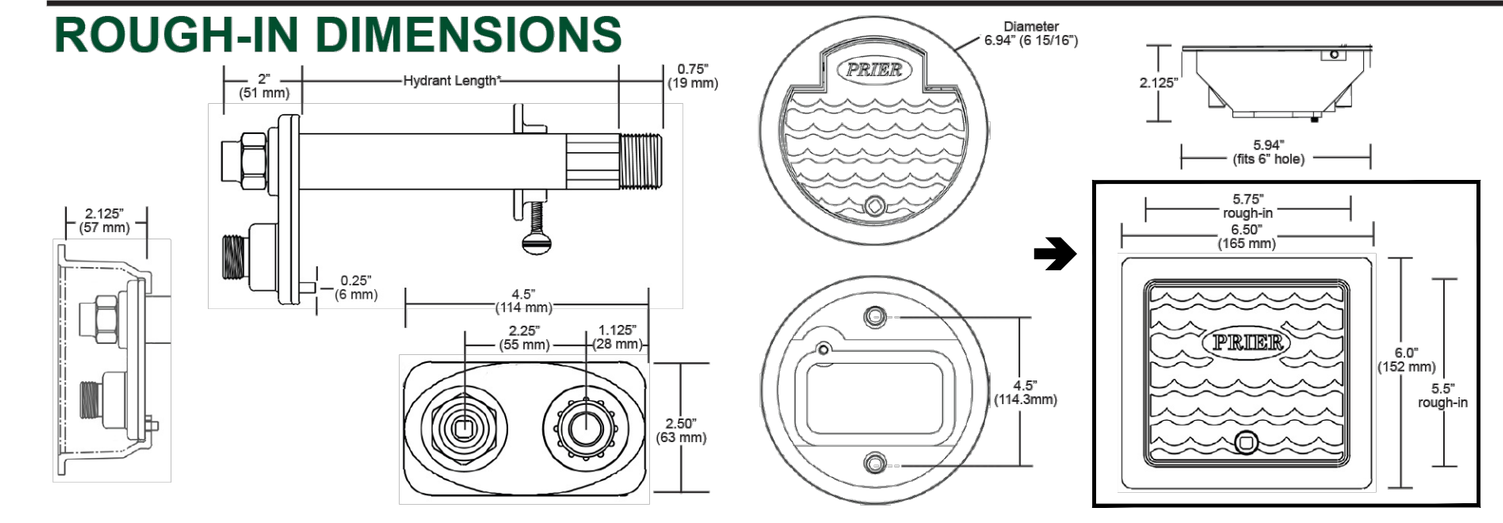

SPECS
Furnish and install Model C-634 Heavy Commercial Wall Hydrant manufactured by PRIER Products, Inc. Hydrant shall be surface mount and installed through 1 3/8" round opening. Hydrant shall have automatic draining capabilities with integral vacuum breaker/double backflow preventor. Hydrant shall flow 16 gallons per minute minimum at 25 PSI Differential and be at full flow in 2 handle rotations. Hydrant shaft shall be brass with connections. Hydrant shall have 3/4" or 1" (choose one) hose connection with freezeless water flow and self-draining functions, one piece valve plunger, satin nickel finish, brass operating rod with positive triple seal shutoff mechanism. Hydrant shall be approved under ASSE 1052 standard. Operating key & wall clamping ring to be furnished with each hydrant. Hydrant insertion length to be x inches. (Length minimum of 4" to choice length in 2" increments.)

Optional: Furnish and install flush-mount hydrant box for each valve. Hydrant box shall be manufactured of solid cast brass or aluminum with a rough brass, satin nickel plated brass or aluminum (choose one) finish. Box shape may be round or square and round box only comes with satin nickel finish. Box may be installed separately and hydrant be insertable and removable from front of the box. Access to the hydrant box shall be provided by the same operating key as the valve. A gasket shall be installed between the box and hydrant to prevent water intrusion into the structure.

4515 E. 139th Street Grandview, MO 64030 | (800) 362-9055 | PRIER.com

C-634-V

SINK HOSE BIBB AND BOX DETAIL
NOT TO SCALE

ZURN **Z730**
9 [229] TOP MEDIUM-DUTY DRAIN
SPECIFICATION SHEET
TAG _______

Dimensional Data (inches and [mm]) are Subject to Manufacturing Tolerances and Change Without Notice

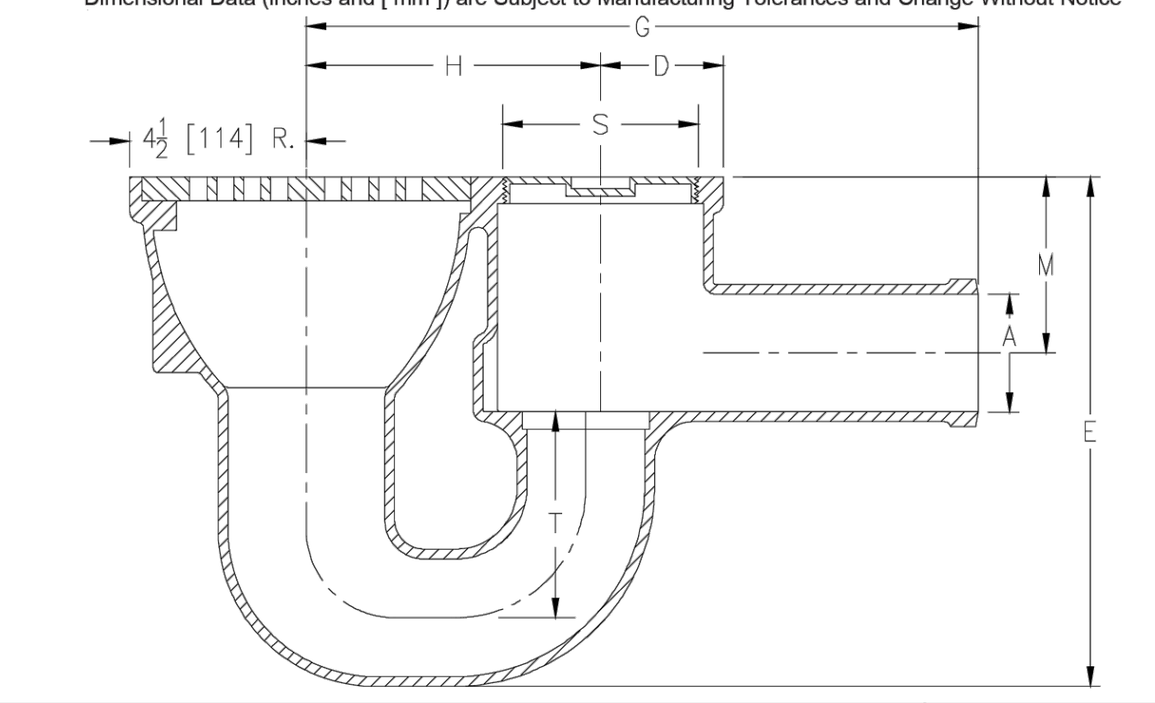

Dimensions in In [mm]								
A Pipe Size	S Cleanout Plug Size	Rad D.	G	H	M	T	Approx. Wt. Lbs. [kg]	Grate Open Area Sq. In. [cm²]
3 [76]	4-1/2 NPT	3-1/8 [79]	17-1/8 [435]	7-1/2 [191]	4-1/4 [108]	4 [102]	54 [24]	23 [148]
4 [102]	5-1/2 NPT	3-5/8 [92]	19-3/8 [492]	7-1/2 [191]	4-3/4 [121]	5 [127]	79 [36]	

ENGINEERING SPECIFIC ATION ZURN Z730
9" [229mm] Diameter top drain, Dura-Coated cast iron body with integral double wall trap and side outlet, with bronze floor level cleanout plug and medium-duty loose slotted grate.

OPTIONS (Check/specify appropriate options)

PIPE SIZE
3 [76]
4 [102]

(Specify size/type) **OUTLET**
____ SP Spigot
4" SP Spigot

'E' BODY HT. DIM.
13 [330]
16 [406]

PREFIXES
✓ Z D.C.C.I. Body and Top*
____ ZN D.C.C.I. Body with Polished Nickel Bronze Top (Add 3/16 [5] to 'M' and 'E' Dim.)

SUFFIXES
____ -DG Duresist Grate
✓ -G Galvanized Cast Iron
____ -J Auxiliary Inlet Connection
____ -K Anchor Flange
____ -P Trap Primer Connection
____ -V Backwater Valve
____ -VP Vandal-Proof Secured Top
____ -Y Sediment Bucket

* Regularly furnished unless otherwise specified.

*IDENTICAL OR EQUIVALENT QUALITY SUBSTITUTION ALLOWED

Zurn Industries, LLC | Specification Drainage Operation
1801 Pittsburgh Avenue, Erie, PA U.S.A. 16502 · Ph. 855-663-9876, Fax 814-454-7929
In Canada | Zurn Industries Limited
3544 Nashua Drive, Mississauga, Ontario L4V 1L2 · Ph. 905-405-8272, Fax 905-405-1292
www.zurn.com

Rev. F
Date: 09/27/2017
C.N. No. 137944
Prod. | Dwg. No. Z730

FLOOR DRAIN DETAIL
NOT TO SCALE

ULINE **H-10735**
STAINLESS STEEL EYEWASH STATION
1-800-295-5510
uline.com

Para Español, vea páginas 5-9.
Pour le français, consulter les pages 10-14.

TOOLS NEEDED

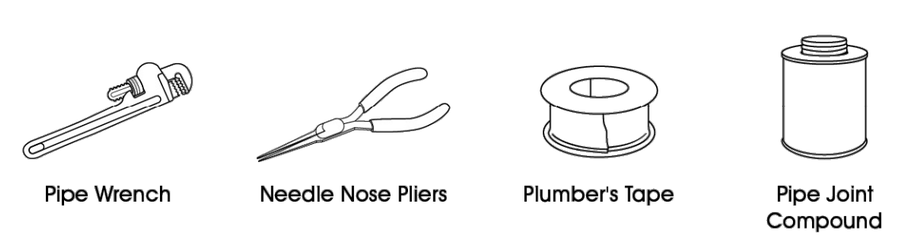

PARTS

A	Base Plate
B	Bottom Drain Pipe
C	Basin Drain Set
D	Middle Pipe Section
E	Top Pipe Section
F	Square Head Plug
G	Long Shower Connection Pipe
H	Shower Head Elbow
I	Short Shower Connection Pipe
J	Shower Ball Valve
K	Shower Head
L	Pull Rod
M	Inner Basin Drain Screw
N	Eyewash Basin
O	Eyewash Bowl Arms
P	Twin Spray Heads
Q	Push Handle
R	Eyewash Dust Covers
S	Middle Horizontal Inlet
T	Top Vertical Inlet
U	Shower Ball Valve Lever

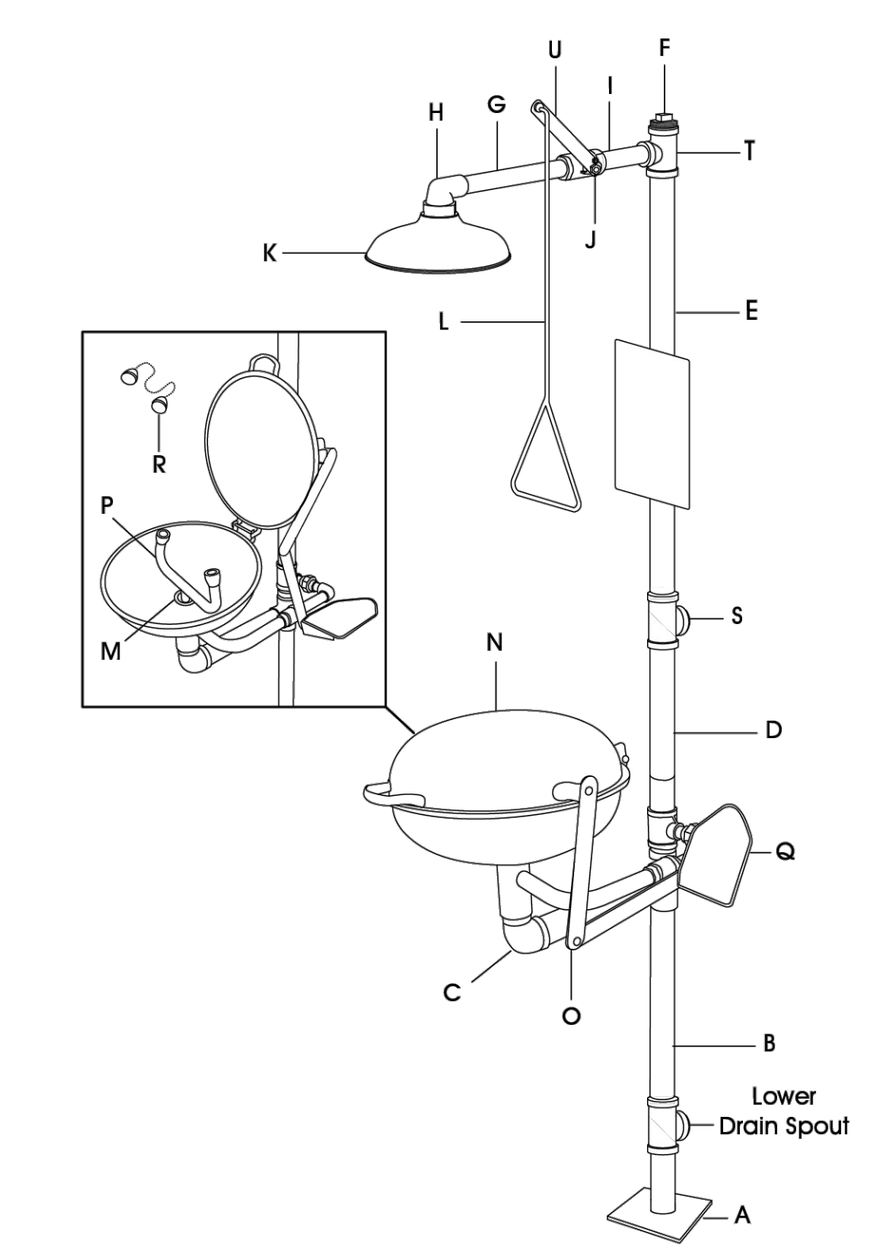

PAGE 1 OF 14 0624 IH-10735

ASSEMBLY

IMPORTANT! All pipes have tapered threads and require plumber's tape and/or joint compound to ensure watertight connection. When securing with plumber's tape, wrap tape 2-4 times around each thread for optimal seal. For best results, Uline recommends the use of plumber's tape followed by joint compound.

1. Secure base plate (A) to floor in desired location. Attach bottom drain pipe (B) to base plate (A) while ensuring lower drain spout is square with base plate. (See Figure 1)

NOTE: The tee-joint on bottom drain pipe (B) is pre-attached. It must be removed to add 2-4 layers of plumber's tape and/or joint compound in order to create a tight seal.

Figure 1

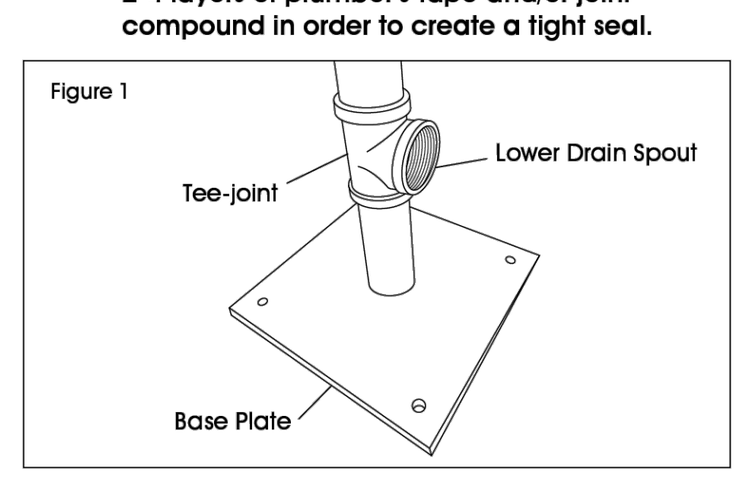

2. Reattach bottom drain pipe (B) to the tee-joint.
3. Attach basin drain set (C) to bottom drain pipe (B), ensuring that the basin drain set is protruding the opposite direction of the lower drain spout.
4. Connect middle pipe section (D) to basin drain set (C).
5. Unscrew top pipe section (E) from pre-attached top vertical (T) and middle horizontal (S) inlets. Wrap 2-4 layers of plumber's tape and/or joint compound, then reassemble with two tee-joints oriented in the opposite direction of each other.
6. Connect reassembled top pipe section (E) to middle pipe section (D), ensuring that the tee-joint with the larger female inlet makes the connection with the middle pipe section (D).

NOTE: Ensure middle horizontal inlet (S) is oriented in the same direction as the lower drain spout from step 1. Ensure top vertical inlet (T) is oriented towards the basin drain set (C).

7. Install the square head plug (F) at desired position on reassembled top pipe section (E).

NOTE: Water supply can be connected to top vertical inlet (T) or middle horizontal inlet (S). Install square head plug (F) into unused inlet.

8. Unscrew long shower connection pipe (G) from shower head elbow (H). Set shower head elbow (H) aside for step 11.
9. Unscrew short (I) and long (G) shower connection pipes from shower ball valve (J). Wrap threads with 2-4 layers of plumber's tape and/or joint compound, then reassemble.

NOTE: While disassembled, ensure shower ball valve (J) is in closed position.

10. Reassemble pipes from step 9. Connect short shower connection pipe (I) to tee-joint on top vertical inlet (T).

NOTE: The shower ball valve lever (U) must be pointing upward when in the closed position.

11. Connect shower head elbow (H) set aside in step 8 to long shower connection pipe (G), ensuring shower head elbow is pointing down.
12. Attach shower head (K) to shower head elbow (H).
13. Using pre-attached bolt and locknut, attach pull rod (L) to shower ball valve lever (U).
14. Unscrew inner basin drain screw (M) on basin drain set (C). (See Figure 2)

Figure 2

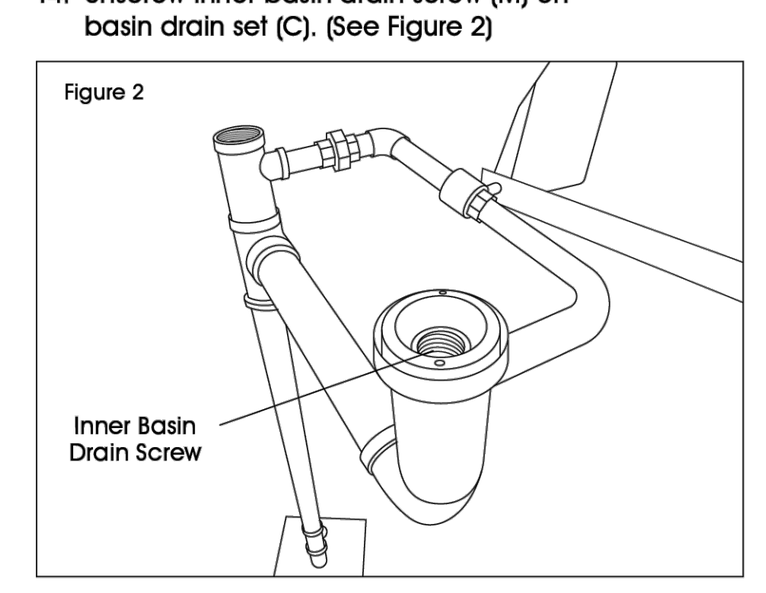

PAGE 2 OF 14 0624 IH-10735

ASSEMBLY CONTINUED

15. Set eyewash basin (N) over the basin drain set (C). Use previously removed inner basin drain screw (M) to secure eyewash basin to basin drain set. Ensure basin handle points forward for final use.

NOTE: It is recommended to tighten inner basin drain screw with needle nose pliers. (See Figure 3)

Figure 3

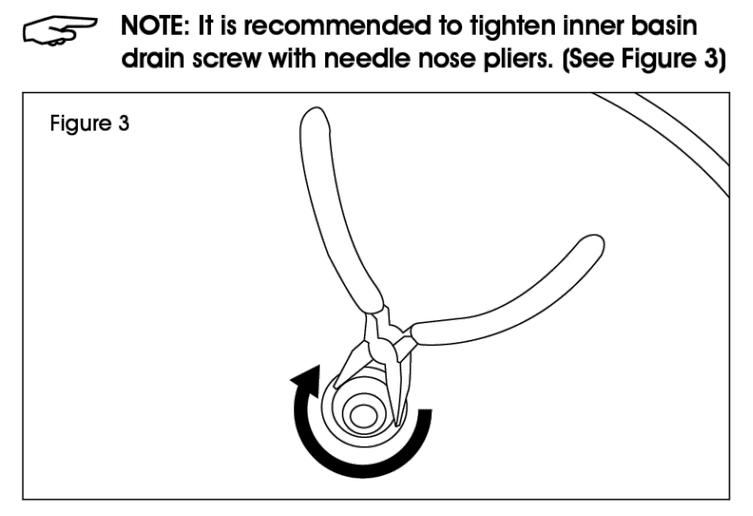

16. Assemble eyewash bowl arms (O). Loosen acorn nut, insert spacer between arms and replace acorn nut. (See Figure 4)

Figure 4

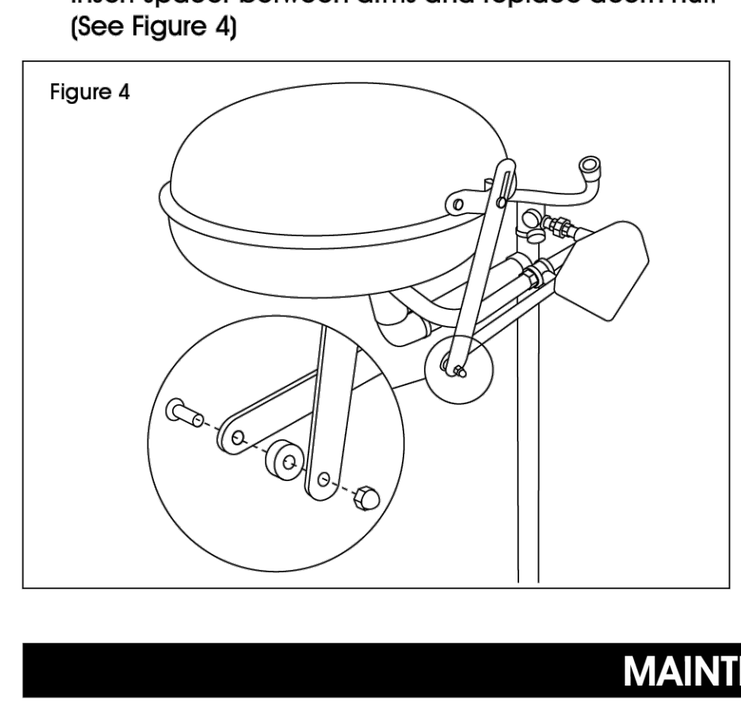

17. Thread twin spray heads (P) into eyewash basin (N) so that the twin spray heads are perpendicular to the basin drain set.

NOTE: Removing yellow eyewash dust covers (R) prior to installation may make this easier.

STOP! Performance should be verified after installation. Check for any leaks while all valves are in the closed position.

IMPORTANT! If leaking after assembly, tighten threaded connections. If leaking persists, disconnect affected connection point and add additional plumber's tape and/or joint compound.

18. Activate water by pulling down on pull rod (L). Run water through shower head to flush out any impurities.

NOTE: Water flow from the shower head should be a minimum of 20 gallons/min, as per ANSI Z358.1 standards.

19. Once flush is complete, push upward on pull rod (L) to close shower ball valve (J). Activate twin spray heads (P) by pressing push handle (Q) to test for proper connections.

NOTE: Water flow from the twin spray heads should be a minimum of 0.4 gallons/min, as per ANSI Z358.1 standards.

20. Mount eyewash sign in desired location using pre-attached bracket.
21. Locate inspection card in desired location using included cable tie.

MAINTENANCE

- All units should be tested on a weekly basis to clear supply lines and verify proper activation. Units must also be inspected annually to verify that they continue to meet conformance of required performance standards.
- Where freezing conditions exist, unit must be protected from freezing.

PAGE 3 OF 14 0624 IH-10735

*IDENTICAL OR EQUIVALENT QUALITY SUBSTITUTION ALLOWED

ASSEMBLY CONTINUED

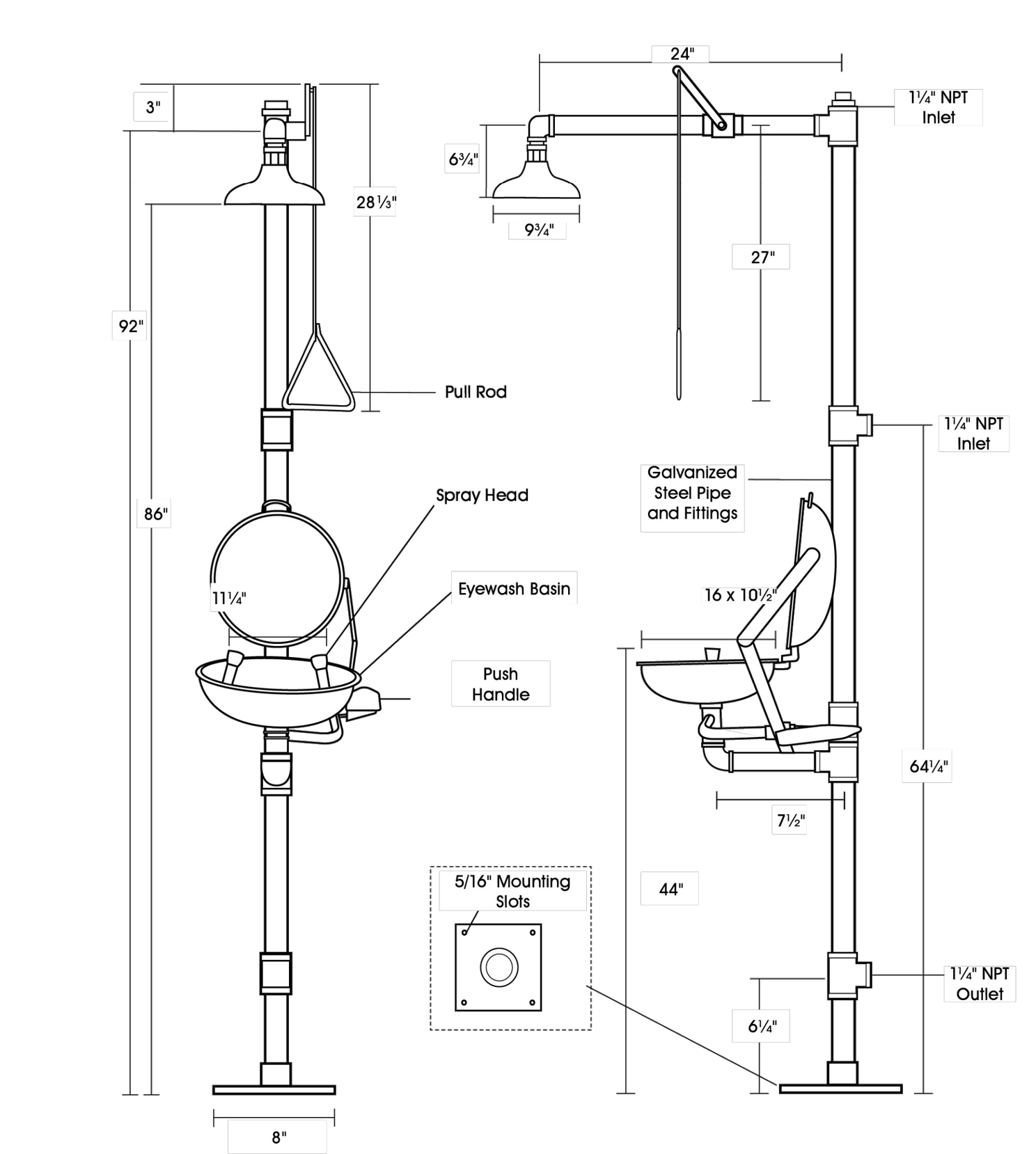

This unit complies with the requirements of ANSI Z358.1.

ULINE
1-800-295-5510
uline.com

PAGE 4 OF 14 0624 IH-10735

EYE WASH STATION DETAIL
NOT TO SCALE

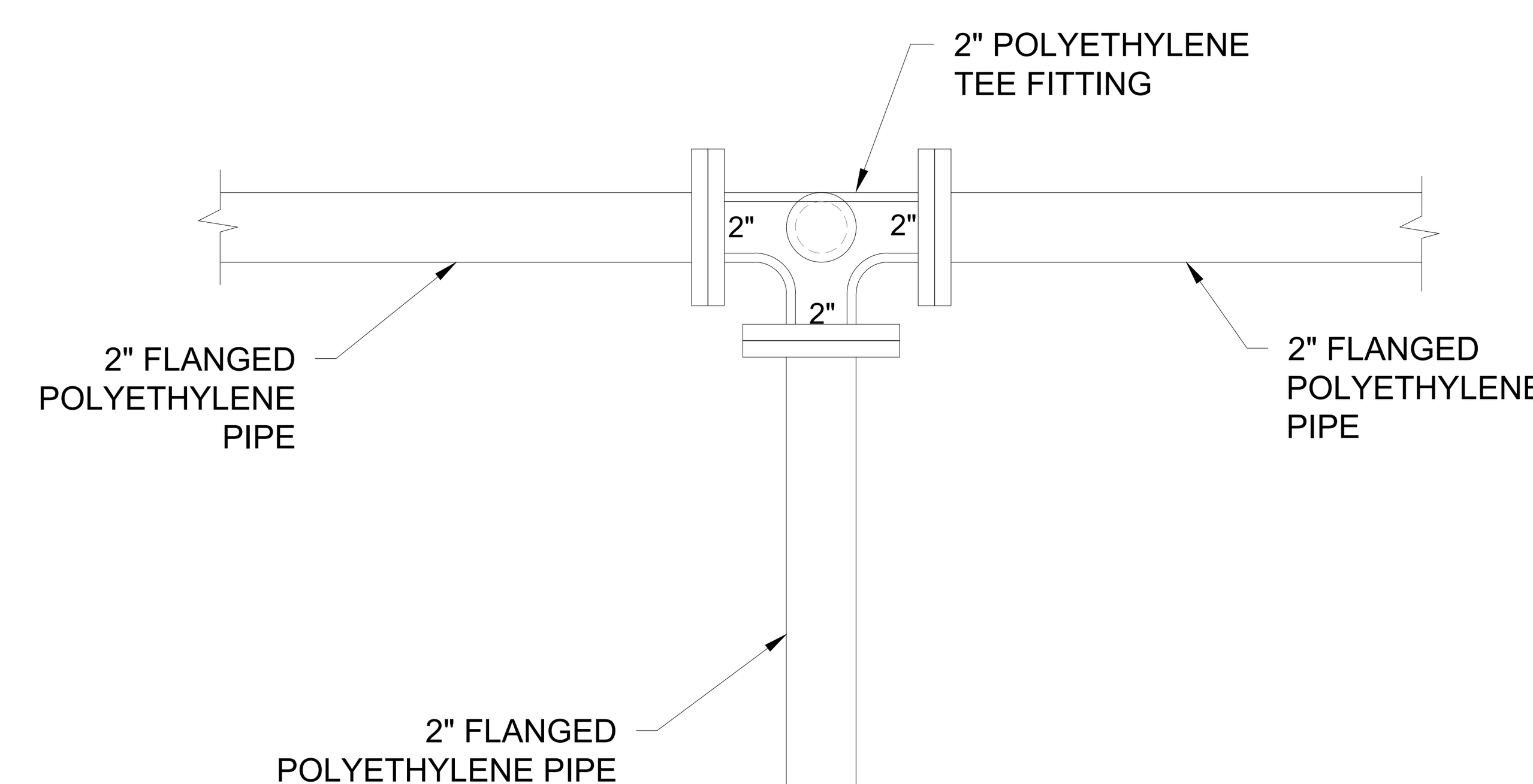

GAS SERVICE LINE DETAIL
NOT TO SCALE

CHS2 H-20 Rated Aluminum Hatch

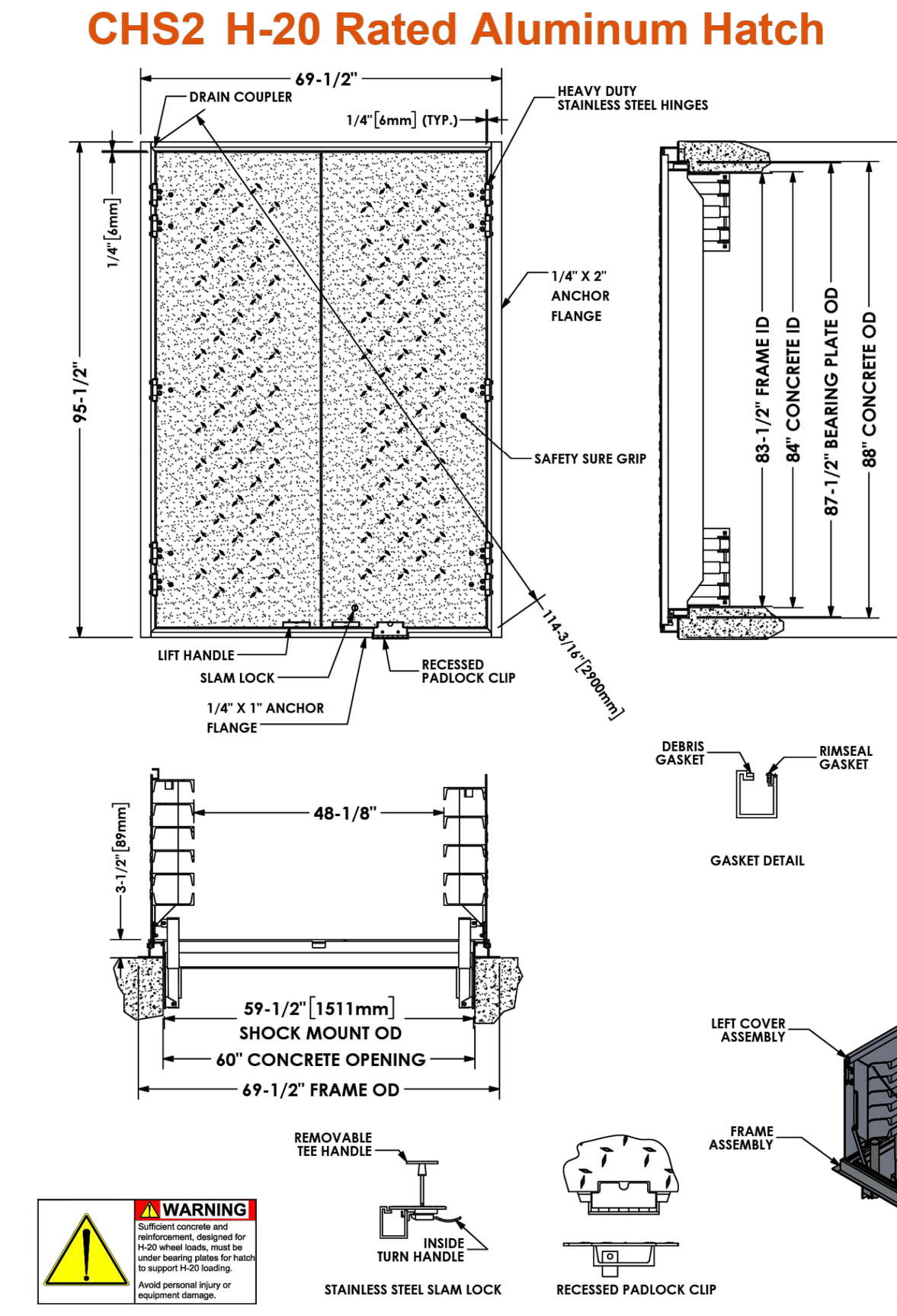

STYLE "CHS2" ACCESS HATCH, AS MANUFACTURED BY EJ.

MATERIAL SHALL BE 6061-T6 ALUMINUM FOR BARS, ANGLES, AND EXTRUSIONS. 1/4" DIAMOND PLATE SHALL BE 5086 ALUMINUM.

UNIT DESIGNED HEAVY DUTY, FOR 16,000 LBS + 30% IMPACT H-20 WHEEL LOADS, OVER A 10" X 20" CONTACT AREA. FRAME AND BEARING PLATE MUST BE CAST INTO AND SUPPORTED BY CONCRETE DESIGNED FOR H-20 WHEEL LOADS.

UNIT NOT SUITABLE FOR WHEEL LINE PLACEMENT.

UNIT SUPPLIED WITH A HEAVY DUTY STAINLESS STEEL PNEUMATIC SPRING, FOR EASE OF OPERATION WHEN OPENING COVER. COVER SHALL BE COUNTERBALANCED, SO ONE PERSON CAN EASILY OPEN THE HATCH DOOR.

FRAME SHALL BE OF EXTRUDED ALUMINUM. A DOVETAIL GROOVE SHALL BE EXTRUDED INTO THE SEAT OF THE FRAME FOR A 1/8" SILICONE GASKET.

EACH HATCH SHALL BE EQUIPPED WITH A STAINLESS STEEL HOLD OPEN ARM. DOOR SHALL LOCK OPEN IN THE 90 DEGREE POSITION. HOLD OPEN ARM SHALL BE FASTENED TO THE FRAME WITH A 1/2" GRADE 316 STAINLESS STEEL BOLT.

HINGES SHALL BE OF HEAVY DUTY DESIGN. MATERIAL SHALL BE GRADE 316 STAINLESS STEEL. EACH HINGE SHALL HAVE A GRADE 316 STAINLESS STEEL, 3/8" DIAMETER HINGE PIN. HINGE SHALL BE FASTENED TO THE CHANNEL FRAME AND DIAMOND PLATE WITH GRADE 316 STAINLESS STEEL BOLTS AND NY-LOCK NUTS.

ALUMINUM SHALL BE SUPPLIED WITH MILL FINISH. EXTERIOR OF FRAME WHICH COMES IN CONTACT WITH CONCRETE SHALL HAVE ONE COAT BLACK PRIMER.

EACH HATCH SHALL BE EQUIPPED WITH A STAINLESS STEEL LIFT HANDLE. LIFT HANDLE SHALL BE FLUSH WITH TOP OF 1/4" DIAMOND PLATE.

EACH "CHS2" STYLE HATCH IS SUPPLIED WITH A 1-1/2" THREADED DRAIN COUPLER ON UNDERSIDE OF CHANNEL FRAME FOR PIPE CONNECTION.

EACH HATCH SHALL BE SUPPLIED WITH A GRADE 316 STAINLESS STEEL SLAM LOCK, WITH KEY WAY PROJECTED BY A THREADED PLUG. PLUG SHALL BE FLUSH WITH THE TOP OF THE 1/4" DIAMOND PLATE. SLAM LOCK SHALL BE FASTENED WITH FOUR GRADE 316 STAINLESS STEEL BOLTS AND WASHERS.

EACH HATCH SHALL BE SUPPLIED WITH AN RECESSED PADLOCK CLIP (PADLOCK BY OTHERS).

TOP SURFACE OF THE COVER SHALL HAVE SAFETY SURE GRIP.

EACH HATCH SHALL BE EQUIPPED WITH A RIMSEAL GASKET.

EACH HATCH SHALL BE EQUIPPED WITH A DEBRIS GASKET.

EACH HATCH TO COME EQUIPPED WITH STAINLESS STEEL SAFETY CHAINS

ej

Product Number
H60841918

Design Features
-Materials
Aluminum
-Design Load
Heavy Duty (Not in Driving Lane)
-Open Area
-Coating
-√ Designates Machined Surface

Certification
- NPR21-003108
- 202107-30139
- Estimated Weight: 651 LBS
- Country of Origin: USA
- Revision Level: A

Drawing Revision
4/17/2023 Designer: PJC
04/17/2023 Revised By: TYM

Disclaimer
Weights (lbs/kg), dimensions (inches/mm) and drawings provided for your guidance. We reserve the right to modify specifications without prior notice.

Quality is very important for EJ, and it includes compliance to measurements and features in this drawing. We are constantly looking at innovation with optimized designs and materials. Please check our website ejco.com for more information. Technical information contained in this drawing represents intellectual property of EJ. If you are using it in other documents please contact EJ, us.sales@ejco.com.
Copyright © 2017 EJ GROUP, Inc.
All rights reserved.

Contact
800 626 4653
ejco.com

ej

59-1/2" x 83-1/2" Aluminum Access Hatch Assembly, 3-1/2" Tall Channel Frame, Gasketed, Safety Chains, SSG, 2 Doors, Lift Assist, RPC, Slam Lock, H-20 Unintended Traffic
Product: H60841918

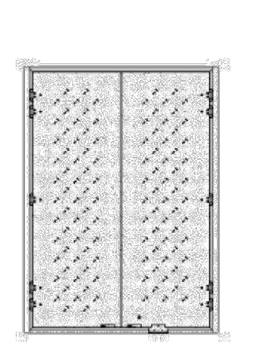

Classic Series:	600840
Product Type:	Hatch Assembly
Badging Classification:	Blank
Shape:	Rectangle
Cover Style:	Ribbed, Solid
Frame Style:	Top Flange, Channel
Clear Opening Length:	59.5 in
Clear Opening Width:	83.5 in
Flange Outer Length:	69.5 in
Flange Outer Width:	95.5 in
Flange Inner Length:	60 in
Flange Inner Width:	84 in
Frame Height:	3.5 in
Cover/Grate Quantity:	2
Hinge Type:	Stainless Steel Hinge
Hinged Quantity:	10
Load Rating:	H20 Loading
Material Specification:	Aluminum 6061-T6, Aluminum 5086
Material Type:	Aluminum
Fastener Material:	Stainless Steel
Gasket Installed:	Yes
Gasket Material:	Other
Gasket Style:	Other
Pick Options:	Lift Handle
Lift Assist:	Pneumatic Spring
Lock Type:	Recessed Padlock Clip, Slam Lock
Anchor Studs:	Yes
Safety Features:	Safety Chain, Hold Open Arm

ejco.com 800 626 4653
Copyright © 2025 EJ Group, Inc. All rights reserved.

BACKFLOW VAULT ALUMINUM HATCH DETAIL
NOT-TO-SCALE

ESG ENGINEERING
6400 Peake Rd
Macon, GA 31210
Ph: (478) 474-4996
Fax: (478) 474-5045

GROUNDWATER WELLS #4 & #5
FOR THE
CITY OF FLOWERY BRANCH

REVISIONS

NO.	DESCRIPTION	DATE
1	ESPC SHEETS	11-7-25
2	REVISED WITH CITY COMMENTS	12-1-25

CONFORMED SET



DRAWN BY: DSC
CHECKED BY: ADS
DATE: OCT 2025
SCALE: N.T.S.

CONTENT:
CONSTRUCTION DETAILS

SHEET NO:
C9.2

Last Saved By: Eleonard Plotted: 12/2/2025 9:21 AM
Drawing Path: Z:\Engineer Projects\F0002 - FLOWERY BRANCH, CITY OF\Fxxxx.xxx Groundwater Well Restoration\Base\CAD\C0-COVER & DETAILS.dwg

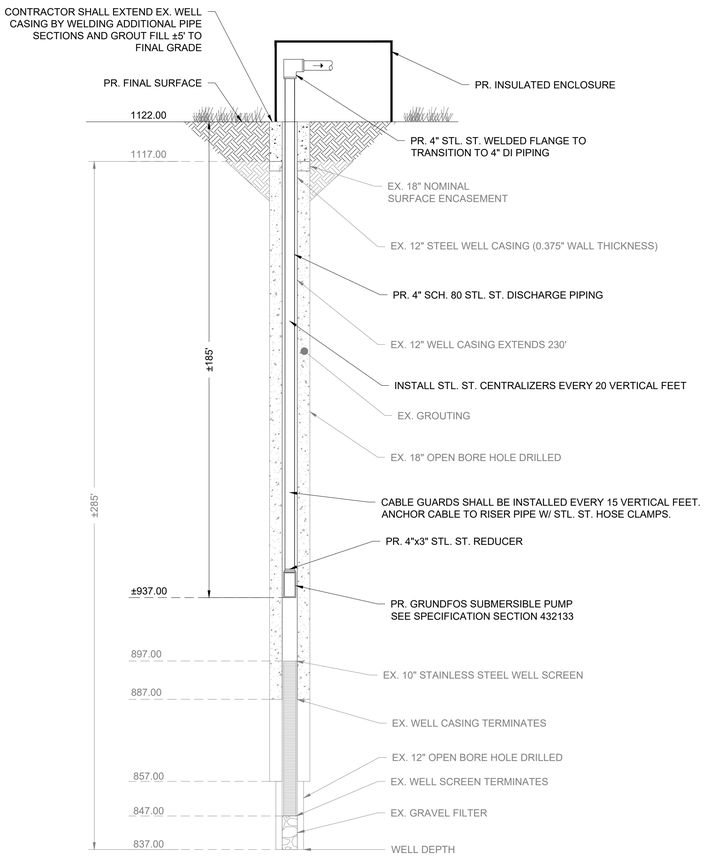

HENDERSON WELL SECTION
NOT TO SCALE

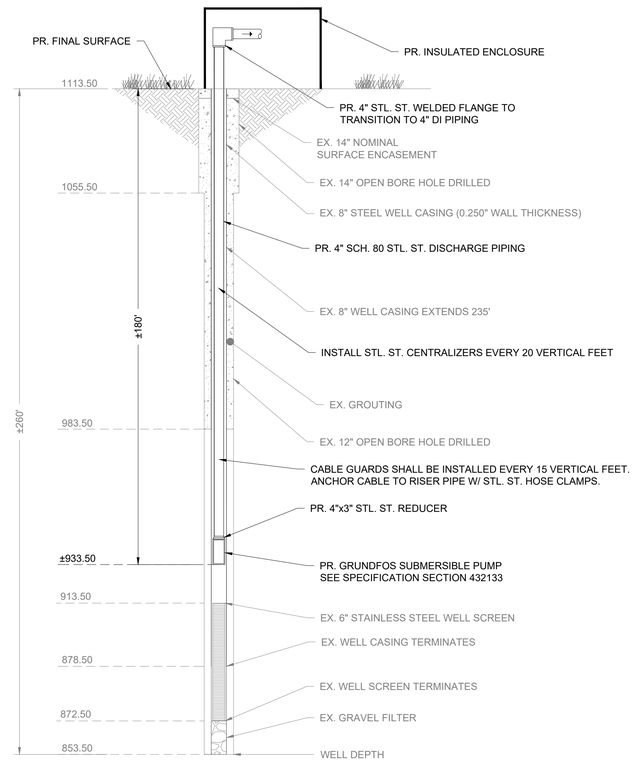

WATERSTONE WELL SECTION
NOT TO SCALE

NOTES:

1. PRECAST CONCRETE VAULT SHALL BE BY TINDALL OR APPROVED EQUIVALENT.
2. VAULT SHALL NOT BE LOCATED IN AREA SUBJECT TO GROUND WATER RUNOFF, STORM DRAIN COLLECTION AND DISCHARGE, OR AREAS PRONE TO CONSTANT WATER INFILTRATION. VAULT SHALL BE ABLE TO DRAIN BY GRAVITY OR BY ALTERNATE MEANS.
3. HATCH DOOR TO BE LOCATED OVER METER ASSEMBLY FOR EASE OF REMOVAL.
4. CONTRACTOR TO SEAL ALL OPENINGS IN VAULT WITH LS-200 LINK SEAL & NON-SHRINK GROUT.
5. FOR FINAL APPROVAL, ASSEMBLY MUST BE SET IN VAULT AS SPECIFIED. UNDER NO CONDITION WILL ANY CONNECTION BE ALLOWED BETWEEN THE SERVICE METER AND BACKFLOW PREVENTER USED FOR SYSTEM CONTAINMENT. BACKFLOW PREVENTER SHALL BE INSTALLED DOWNSTREAM OF ALL METERS.
6. ALL BACKFLOW PREVENTION DEVICES MUST BE SUCCESSFULLY TESTED PRIOR TO FINAL ACCEPTANCE BY THE ENGINEER.

MATERIALS		
ITEM	QTY	DESCRIPTION
1	1	6'x8' PRECAST CONCRETE VAULT
2	1	ALUMINUM HATCH W/ LOCKING HASP
3	1	WALL-MOUNTED STEEL LADDER
4	1	6" 709DCDA DOUBLE CHECK DETECTOR ASSEMBLY
5	1	#57 STONE BEDDING
6	3	STANDON S-89 FLANGED PIPE SUPPORT
7	2	6" FLxRJ DUCTILE IRON PIPE SPOOL PIECE
8	2	6" MECHANICAL JOINT W/ MEGALUG (OR EQUIVALENT)
9	2	LS-200 LINK SEAL
10	1	3" PVC DRAIN PIPING W/ FILTER FABRIC
11	1	1.5" DOMESTIC WATER LINE
12	1	CURB STOP / ISOLATION VALVE
13	1	WATER METER
14	1	BACKFLOW PREVENTER
15	1	METER BOX

BACKFLOW VAULT NOTES
NOT-TO-SCALE

7

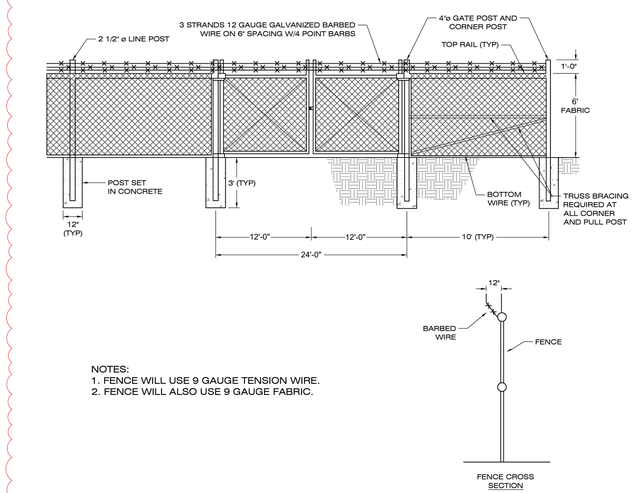

NOTES:
1. FENCE WILL USE 9 GAUGE TENSION WIRE.
2. FENCE WILL ALSO USE 9 GAUGE FABRIC.

CHAIN LINK FENCE & GATE DETAIL
NOT TO SCALE

INSULATED FIBERGLASS ENCLOSURE SIZING GRID



	OUTSIDE TOP	LOWER COVER	BOTTOM AT UPPER BASE	OUSIDE BASE FLANGE	COVER HEIGHT	OVERALL HEIGHT
MODEL #	A—B	C—D	E—F	G—H	I	J
D-103	20.75 x 6.00	27.25 x 12.25	30.25 x 14.75	33.75 x 18.25	21.5	23.25
D-104	31.75 x 5.75	38.25 x 12.25	41.25 x 15	44.25 x 18	20.75	23.5
D-102	22.25 x 15.75	26.5 x 20	29 x 22.25	33 x 26.25	25.75	28.5
D-102-39	22.25 x 15.75	25.75 x 19.25	31 x 25	34 x 27.75	25.75	39
D-105	41.25 x 17.50	47 x 22.75	49 x 25	53.5 x 29.5	23.5	25.5
D-105-36	41.25 x 17.50	47 x 22.75	52 x 28	55 x 31	23.5	36
D-100	30 x 20.75	41.5 x 32.5	44 x 35	48.5 x 39.75	34.75	37
D-106	39 x 31.25	49 x 40.5	50.75 x 42.5	54.75 x 46.5	40	43.5
D-207	48.75 x 32	55.5 x 37.5	59.5 x 40.5	65 x 46	35.5	37.25
D-207-48	48.75 x 32	55.5 x 37.5	63 x 44	65.5 x 47	35.5	48
D-108	64.5 x 31.5	68.5 x 34.5	70.5 x 36.5	74.5 x 40.5	44.25	46.25
D-301	74.63 x 46.5	82.5 x 54.5	86.5 x 59	90.5 x 63	26.75	33.75
D-303	74.63 x 46.5	82.5 x 54.5	86.5 x 59	90.5 x 63	46	53

GENERAL SPECIFICATIONS

The molded fiberglass enclosure shall be constructed with rigid thixotropic polyester resin and 30% chopped glass in 1-1/2 to 2-inch random patterns of 1/8 to 3/16 inch thick. The exterior finish shall be White isophthalic gel-coating .02 to .04 inches. The inside surface shall be insulated with 2 lb.-density sprayed-on polyurethane foam, producing an R-14 to R-19 composite value. The fiberglass base flange shall be hinged using 3-1/2-inch noncorrosive polycross link hinges or 3 x 4-inch stainless steel. A 30 lb. spring-loaded latch hooks to a 7-inch cast aluminum handle.

WELL HOUSE FIBERGLASS ENCLOSURE DETAIL
NOT-TO-SCALE

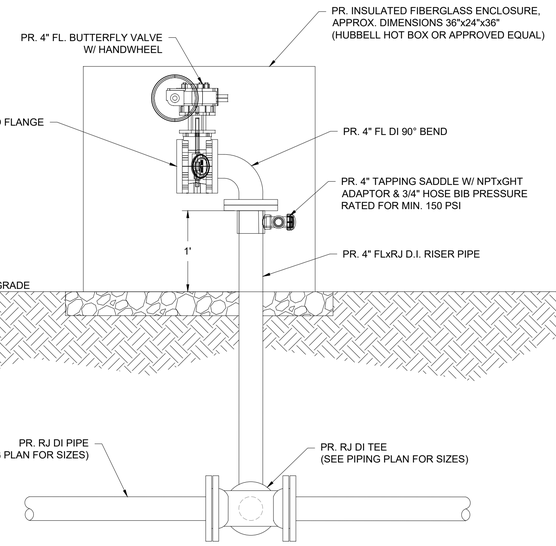

WELL BLOW-OFF VALVE DETAIL
NOT-TO-SCALE

ESG ENGINEERING
6400 Peake Rd
Macon, GA 31210
Ph: (478) 474-4996
Fax: (478) 474-5045

GROUNDWATER WELLS #4 & #5

FOR THE

CITY OF FLOWERY BRANCH

REVISIONS		
NO.	DESCRIPTION	DATE
1	ESPC SHEETS	11-7-25
2	BID SET OF PLANS	12-1-25
3	REVISED WITH CITY COMMENTS	12-5-25
4	ADDENDUM #1	12-8-25
5	ADDENDUM #2	12-11-25
6	ADDENDUM #3	12-12-25
7	REVISED WITH CITY COMMENTS	12-17-25

CONFORMED SET

GEORGIA REGISTERED No. PE046341 PROFESSIONAL ENGINEER ANDREW D SWICEGOOD

DRAWN BY: DSC
CHECKED BY: ADS
DATE: OCT 2025
SCALE: N.T.S.

CONTENT:

CONSTRUCTION DETAILS

SHEET NO: 3 6 7

C9.3

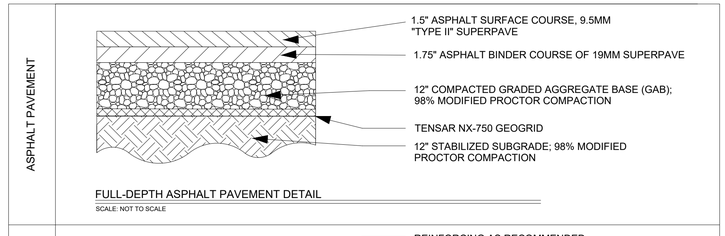

FULL-DEPTH ASPHALT PAVEMENT DETAIL

SCALE: NOT TO SCALE

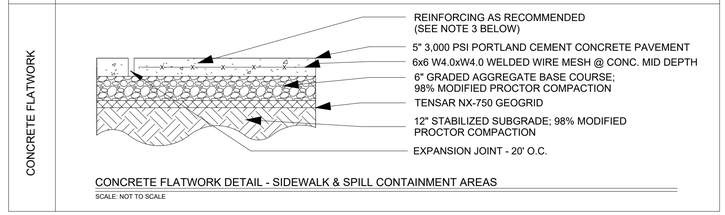

CONCRETE FLATWORK DETAIL - SIDEWALK & SPILL CONTAINMENT AREAS

SCALE: NOT TO SCALE

PAVEMENT NOTES:

1. THE SUBGRADE MATERIALS SHALL BE PROOF ROLLED AND/OR SCARIFIED AND COMPACTED PRIOR TO PLACEMENT OF BASE MATERIAL. WHERE EXISTING SUBGRADE MATERIALS ARE UNSUITABLE, THEY SHALL BE REMOVED AND REPLACED WITH COMPACTED SELECT MATERIAL IN ACCORDANCE WITH GEOTECHNICAL RECOMMENDATIONS.
2. PAVEMENTS SHOULD BE SEPARATED FROM THE HIGH PLASTICITY/ELASTICITY SOILS ENCOUNTERED AT THIS SITE WITH A MINIMUM OF 12" SUITABLE STRUCTURAL FILL. DUE TO THE DEEPER LOW CONSISTENCY SOILS ENCOUNTERED AT THIS SITE, A LAYER OF TENSAR NX-750 GEOGRID SHALL BE INCLUDED IN PAVEMENT DESIGN. AFTER UNDERCUTTING AND REPLACEMENT OF THE UPPER 12" OF HIGHLY PLASTIC OR ELASTIC SOILS, THE SUBGRADE SHALL BE PREPARED AS NOTED IN EARTHWORK.
3. ALL JOINTS MUST BE SEALED WITH AN APPROVED SEALANT. STEEL REINFORCING SHALL BE USED AT JOINTS. REFER TO ACI 330R (GUIDE FOR DESIGN AND CONSTRUCTION OF CONCRETE PARKING LOTS) FOR JOINT DESIGN AND LAYOUT.

PAVEMENT DETAILS

NOT TO SCALE

STRUCTURAL NOTES:

1. PAD SIZE SHALL BE MINIMUM INDICATED OR AS SHOWN ON THE PLANS OR AS INDICATED BY THE MANUFACTURER AND APPROVED BY THE ENGINEER.
2. THE SIZE, NUMBER, TYPE, LOCATION, AND THREAD PROJECTION OF THE ANCHOR BOLTS SHALL BE DETERMINED BY THE EQUIPMENT MANUFACTURER AND AS APPROVED BY THE ENGINEER. ANCHOR BOLTS SHALL BE HELD IN POSITION WITH A TEMPLATE OR OTHER ACCESSIBLE MEANS, MATCHING THE BASE PLATE, WHILE PAD IS BEING PLACED.
3. ANCHOR BOLT SLEEVES SHALL BE USED TO PROVIDE MINIMUM ANCHOR BOLT MOVEMENT OF 1/2" IN ALL HORIZONTAL DIRECTIONS. THE MINIMUM SLEEVE LENGTH SHALL BE 8 TIMES THE BOLT DIAMETER.
4. ANCHOR BOLT SLEEVES SHALL HAVE A MINIMUM INTERNAL DIAMETER 1" GREATER THAN BOLT DIAMETER AND A MAXIMUM INTERNAL DIAMETER 3" GREATER THAN ANCHOR BOLT DIAMETER. SLEEVES SHALL BE FILLED WITH NON-SHRINK GROUT AFTER BOLTS ARE ALIGNED.
5. EQUIPMENT BASES SHALL BE INSTALLED LEVEL UNLESS INDICATED OTHERWISE.
6. WEDGES, SHIMS, OR LEVELING NUTS SHALL BE USED TO SUPPORT THE BASE WHILE THE NON-SHRINK GROUT IS PLACED. WEDGES OR SHIMS THAT ARE LEFT IN PLACE SHALL NOT BE EXPOSED TO VIEW.
7. HEIGHT OF PADS SHALL BE MINIMUM REQUIRED FOR ANCHOR BOLT CLEARANCE TO KEEP ANCHOR BOLT ABOVE SUPPORTING SLAB (SEE TABLE BELOW). WHERE EQUIPMENT OR PIPING ELEVATION REQUIRE A PAD HEIGHT LESS THAN THE MINIMUM SHOWN, USE TYPE "B" EQUIPMENT PAD WITH BLOCKOUT.
8. AT CONTRACTOR'S OPTION, CONCRETE ANCHORS MAY BE USED IN LIEU OF CAST-IN-PLACE ANCHOR BOLTS FOR EQUIPMENT ANCHOR BOLTS LESS THAN 3/4" DIAMETER WHEN APPROVED BY THE EQUIPMENT MANUFACTURER AND ENGINEER. ANCHORS SHALL BE INSTALLED WITH THE 6 MINIMUM EDGE DISTANCE IN EACH DIRECTION.

AB DIA. (IN)	1/2	5/8	3/4	7/8	1	1-1/4	1-3/8	1-1/2	1-3/4	2
MIN. PAD HT (IN)	7	8-1/2	10	11	12-1/2	15	16-1/2	18	21	24

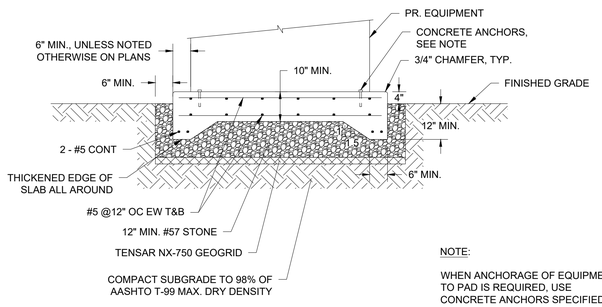

NOTE:

WHEN ANCHORAGE OF EQUIPMENT TO PAD IS REQUIRED, USE CONCRETE ANCHORS SPECIFIED

GENERATOR SLAB DETAIL

SCALE: N.T.S.

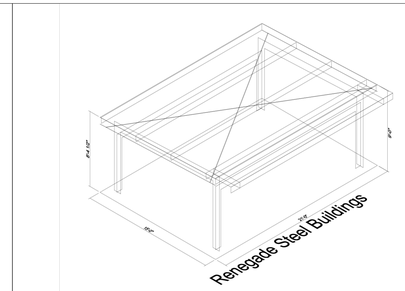

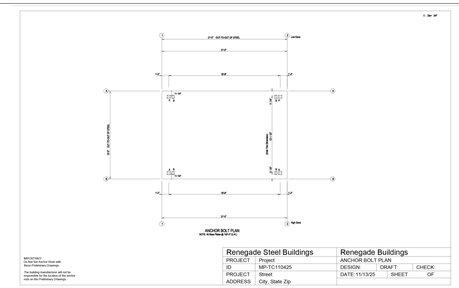

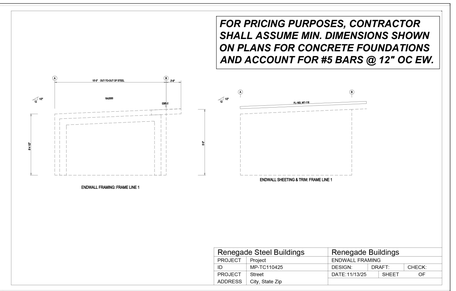

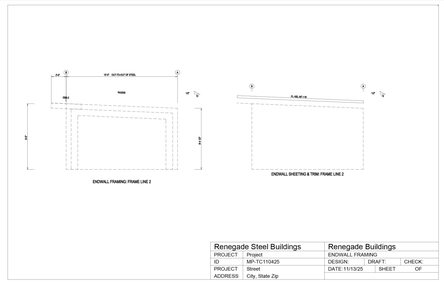

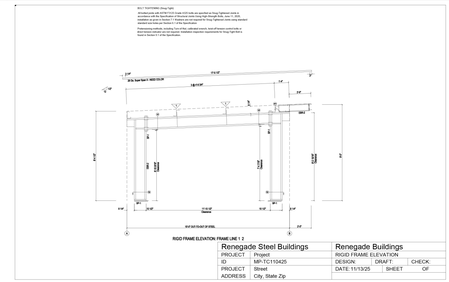

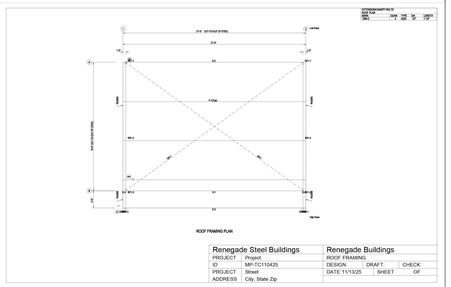

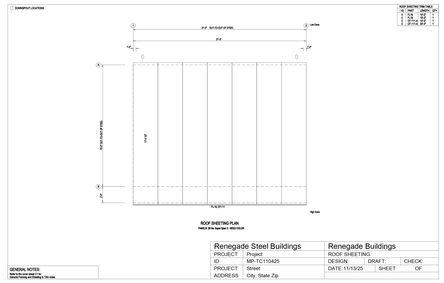

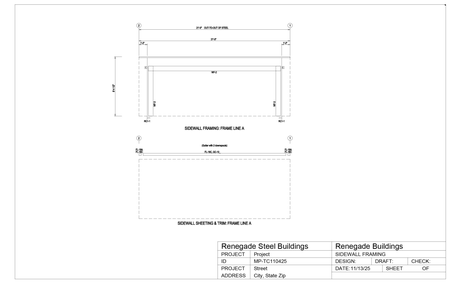

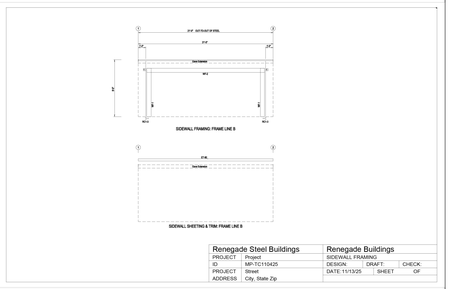

COVERED STEEL STRUCTURE DETAILS

NOT TO SCALE

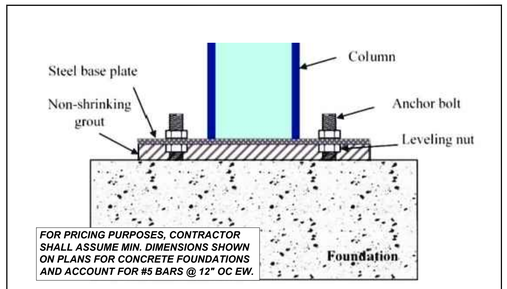

NOTE: RENEGADE STEEL WILL PROVIDE FINAL STRUCTURAL DESIGN OF COVERED AREA AND FOOTERS

COVERED STEEL STRUCTURE - COLUMN INSTALLATION INTO FOUNDATION DETAIL

NOT TO SCALE

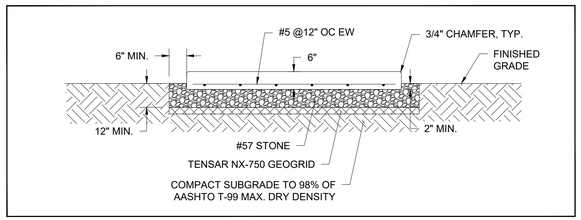

WELL PUMP & HVAC EQUIPMENT SLAB DETAIL

SCALE: N.T.S.

ESG ENGINEERING
6400 Peake Rd
Macon, GA 31210
Ph: (478) 474-4996
Fax: (478) 474-5045

GROUNDWATER WELLS #4 & #5

FOR THE

CITY OF FLOWERY BRANCH

REVISIONS

NO.	DESCRIPTION	DATE
1	ESPC SHEETS	11-7-25
2	REVISED WITH CITY COMMENTS	12-1-25

CONFORMED SET

GEORGIA REGISTERED No. PE046341 PROFESSIONAL ENGINEER ANDREW D SWICEGOOD

DRAWN BY: DSC
CHECKED BY: ADS
DATE: OCT 2025
SCALE: N.T.S.

CONTENT:

CONSTRUCTION DETAILS

SHEET NO:

C9.4

Last Saved By: Eleonard
Plotted: 12/2/2025 9:21 AM
Drawing Path: Z:\Engineer Projects\F0002 - FLOWERY BRANCH, CITY OF\Fxxxx.xxx Groundwater Well Restoration\Base\CAD\C0-COVER & DETAILS.dwg

USABlueBook GET THE BEST TREATMENT™

‹ Back to overview



Chemical Injection Quill, PVC, 3/4" NPT(M) x 3/4" NPT(M)

Item number 350546

Catalog Page	162
Net weight	0.2
Condition	New
Special Savings	Standard Pricing

+ Hover to zoom | Click to enlarge

Product Details

- **Built-in check valve prevents backflow**

These chemical injection quills feature a built-in spring-loaded check valve that prevents backflow. Quills are 2-3/4" long. Longer lengths (up to 24") are available as special order; contact us for details.

Tech Specs:

Connection: 3/4" NPT(M) x 3/4" NPT(M)
Body: PVC
Ball: ceramic
Spring: Hastelloy C-276
PSI: 150

Our Business
› Home
› About Us
› Careers
› Catalog Request

Resources
› Return Policy
› Se habla español
› World Service
› Terms & Conditions

4" & 6" CHEMICAL INJECTORS AND SADDLE TAP
NOT TO SCALE

USABlueBook GET THE BEST TREATMENT™



Koflo Injection Quill, 1", 5" Stinger, PVC, QP-1.0-5

Item number 351708

Brand Name	Koflo Corporation
Catalog Page	164
Net weight	1
Condition	New
Special Savings	Standard Pricing

+ Hover to zoom | Click to enlarge

Product Details

- **NSF-61 Certified**
- **PVC body quills are great with chlorine**
- **1" NPT(F) x 1" NPT(M) Connection**

These non-metallic injection quills are suitable for a wide range of chemicals. Use PVC quills for chlorine. PVC is rated to 100°F

and 150 psi. They have a cracking pressure of 5 psi.

Tech Specs:

Connection Size: 1" NPT(F) x 1" NPT(M)
Material: PVC/Ceramic
Quill Length: 5"
PSI: 150

ESG ENGINEERING
6400 Peake Rd
Macon, GA 31210
Ph: (478) 474-4996
Fax: (478) 474-5045

GROUNDWATER WELLS #4 & #5
FOR THE
CITY OF FLOWERY BRANCH

REVISIONS

NO.	DESCRIPTION	DATE
1	ESPC SHEETS	11-7-25
2	REVISED WITH CITY COMMENTS	12-1-25

CONFORMED SET

GEORGIA REGISTERED No. PE046341 PROFESSIONAL ENGINEER ANDREW D SWIGERT

DRAWN BY: DSC
CHECKED BY: ADS
DATE: OCT 2025
SCALE: N.T.S.

CONTENT:
CONSTRUCTION DETAILS

SHEET NO:
C9.5

Last Saved By: Eleonard
Plotted: 12/2/2025 9:21 AM
Drawing Path: Z:\Engineer Projects\F0002 - FLOWERY BRANCH, CITY OF\Fxxxx.xxx Groundwater Well Restoration\Base\CAD\C0-COVER & DETAILS.dwg

Last Saved By: Eleonard   Plotted: 12/2/2025 9:21 AM
Drawing Path: Z:\Engineer Projects\F0002 - FLOWERY BRANCH, CITY OF\Fxxxx.xxx Groundwater Well Restoration\Base\CAD\C0-COVER & DETAILS.dwg

STATE	PROJECT NUMBER	SHEET NO.	TOTAL SHEETS
GA.			

TEMPORARY RAISED PAVEMENT MARKER DETAIL

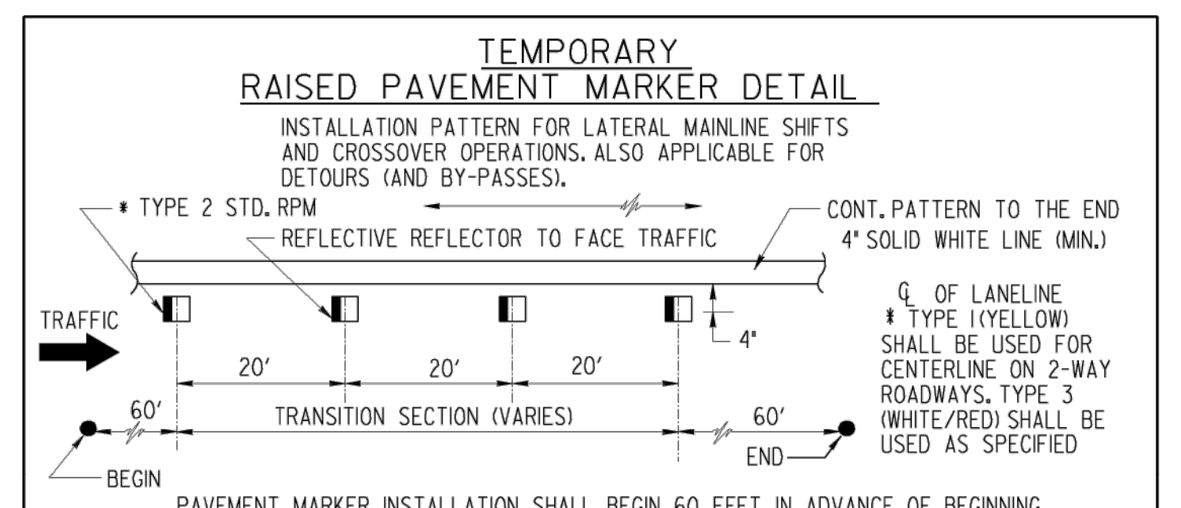

PAVEMENT MARKER INSTALLATION SHALL BEGIN 60 FEET IN ADVANCE OF BEGINNING OF THE SHIFT OR TRANSITION ALIGNMENT, CONTINUE THRU THE TRANSITION AREA, & EXTEND 60 FEET BEYOND THE INTERSECTION WITH THE TEMPORARY ALIGNMENT. TEMPORARY RAISED PAVEMENT MARKERS SHALL BE INSTALLED IN ACCORDANCE WITH THE MANUFACTURERS RECOMMENDATIONS AND THE GA. STD. SPECIFICATIONS.

STANDARD LEGEND

- STRIPED DRUM
- TYPE III BARRICADES
- SPECIAL BARRICADE WITH BI-DIRECTIONAL, TYPE 'C' STEADY BURNING LIGHT OR HIGHWAY SIGN AS SPECIFIED (SEE DETAIL)
- SEQUENTIAL OR FLASHING ARROW
- PORTABLE CHANGEABLE MESSAGE SIGN
- PERMANENT TYPE POST MOUNTED SIGN
- TEMPORARY POST MOUNTED SIGN
- PORTABLE MOUNTED SIGN - FLAGS NOT REQUIRED
- WORK AREA
- TRAFFIC CONE - 28" MIN. - (DAYTIME USE ONLY)
- FLAGGER WITH STOP-SLOW PADDLE
- TRAFFIC IMPACT ATTENUATOR (CRASH CUSHION)
- TYPE I CLEAR (WHITE) DELINEATOR - SINGLE FACE
- TYPE I YELLOW DELINEATOR - SINGLE FACE
- TYPE I CLEAR (WHITE) DELINEATOR DOUBLE FACE
- TYPE I YELLOW DELINEATOR DOUBLE FACE

GENERAL NOTES :

1. ALL TRAFFIC CONTROL DEVICES SHALL BE MADE AND ERECTED IN ACCORDANCE WITH THE DETAILS SHOWN ON THE PLANS; THE MUTCD; THE GEORGIA STANDARD SPECIFICATIONS, AND/OR SPECIAL PROVISIONS. (SEE SECTION 150)
2. ALL TRAFFIC CONTROL DEVICES SHALL BE AS SHOWN, OR AS DIRECTED BY THE ENGINEER. ADDITIONAL DEVICES MAY BE REQUIRED AS DIRECTED BY THE ENGINEER.
3. ALL PORTABLE SIGNS SHALL BE MOUNTED A MINIMUM OF 1FOOT ABOVE THE LEVEL OF PAVEMENT EDGE FOR DIRECTIONAL TRAFFIC OF TWO (2) LANES OR LESS AND A MINIMUM OF 7 FEET FOR DIRECTIONAL OF THREE (3) OR MORE LANES. ALL PORTABLE SIGNS AND SIGN MOUNTING DEVICES UTILIZED IN THE WORK SHALL BE NCHRP 350 COMPLIANT. PORTABLE SIGNS MAY BE USED WHEN THE DURATION OF THE WORK IS LESS THAN 3 DAYS.
4. WHEN THE CONSTRUCTION AREA HAS ENTRANCE/EXIT RAMPS OR INTERSECTIONS, WORK WILL BE PERFORMED IN SUCH A MANNER TO PERMIT TRAFFIC TO OPERATE WITH THE LEAST AMOUNT OF INCONVENIENCE AS POSSIBLE. ADDITIONAL CHANNELIZATION AND SIGNING SHALL BE INSTALLED, AS REQUIRED, TO ALLOW TRAFFIC TO REMAIN AS OPERATIONAL AS POSSIBLE. WHEN ENTRANCE RAMPS/INTERSECTIONS ARE INOPERABLE, FLAGGERS WILL BE UTILIZED TO CONTROL AND PROHIBIT MOVEMENT INTO THE PROJECT AT THAT POINT UNTIL CONSTRUCTION HAS CLEARED THE RESTRICTION SUFFICIENT TO RETURN TO OPERATIONAL STATUS.
5. FOR NIGHT TIME OPERATIONS, DRUMS SHALL HAVE, FOR THE LENGTH OF THE TAPER ONLY, A SIX (6") INCH ORANGE REFLECTIZED TOP STRIPE ON EACH DRUM IN THE TAPER AS REQUIRED IN SECTION 150. SPACING OF DEVICES SHALL BE AS SHOWN. DURING DAYLIGHT HOURS, CONES (28" MIN.) MAY BE USED IN ADVANCE OF AND THROUGHOUT WORK AREA.
6. SIGN LOCATIONS ARE APPROXIMATE AND MAY BE ADJUSTED TO MEET FIELD CONDITIONS BUT MUST BE WITHIN THE LIMITATIONS SET FORTH IN THE MUTCD.
7. A PORTABLE SELF-SUSTAINED SEQUENTIAL OR FLASHING ARROW SIGN SHALL BE USED AT THE BEGINNING OF EACH LANE CLOSURE ON MULTI-LANE HIGHWAYS. ARROW PANELS SHALL NOT BE USED ON TWO-LANE TWO-WAY HIGHWAYS EXCEPT IN CAUTION MODE.
8. WHEN NOT IN USE, PORTABLE SIGNS SHALL BE REMOVED FROM THE TRAVELWAY SO THAT THE MESSAGE IS NOT VISIBLE TO THE MOTORIST. INTERIM SIGNS THAT ARE PERMANENTLY MOUNTED SHALL BE COVERED WHEN NOT APPLICABLE. SEE SECTION 150.
9. PROJECT SIGNS W20-1, G20-1 & G20-2 FOR THIS PROJECT SHALL BE COORDINATED WITH ADJACENT CONSTRUCTION PROJECTS. ONLY ONE SET OF SIGNS IS REQUIRED IN EACH DIRECTION FOR THE TOTAL LENGTH OF ALL PROJECTS- AT THE BEGINNING OF THE FIRST PROJECT AND AT THE ENDING OF THE LAST PROJECT. ADVANCE CONSTRUCTION SIGNS ARE NOT REQUIRED ON INTERMEDIATE PROJECTS. UNLESS CONSTRUCTION ON THE ADJACENT PROJECTS IS COMPLETED BEFOREHAND. THEN PROJECT CONSTRUCTION SIGNS WILL BE ADDED AS NECESSARY.
10. ALL THE COST OF THE MATERIALS, LABOR AND EQUIPMENT NECESSARY TO COMPLETE THE WORK SHALL BE INCLUDED IN THE PRICE BID FOR TRAFFIC CONTROL SECTION 150, LUMP SUM. WHEN SHOWN AS A PAYMENT ITEM IN THE PROPOSAL. OTHERWISE, ALL THE COST WILL BE INCLUDED IN THE OVER-ALL BID SUBMITTED. EXCEPT ON CERTAIN PROJECTS SOME ITEMS MAY BE PAID FOR SEPARATELY BY THE UNIT WHEN SPECIFIED ON THE PLANS AND IN THE PROPOSAL.
11. FOR FREEWAY CONSTRUCTION THE CONTRACTOR SHALL ARRANGE HIS WORK SO THAT THERE IS AN EXIT GORE SIGN AND AN EXIT DIRECTION SIGN IN PLACE FOR ALL EXIT RAMPS AT ALL TIMES.
12. ALL CROSSROADS, SIDEROADS, RAMPS OR OTHER ENTRANCES TO MAINLINE CONSTRUCTION SHALL REQUIRE W20-1 SIGNS LOCATED AS SHOWN IN THE PLANS, OR AS DIRECTED BY THE ENGINEER.
13. MARKINGS AND/OR SIGNS IN CONFLICT WITH INTERIM TRAFFIC CONTROL SHALL BE REMOVED, RELOCATED OR COVERED; APPLICABLE EXISTING AND INTERIM MARKINGS AND/OR SIGNING SHALL BE MAINTAINED PER SECTION 150.
14. ANY CHANNELIZING DEVICES (DRUMS OR BARRICADES) IN CONFLICT WITH CONCRETE BARRIERS SHALL BE OMITTED.
15. CONTRACTOR SHALL PROVIDE THE NECESSARY TRAFFIC CONTROL DURING THE TIE-IN OPERATION.
16. THE TRAFFIC CONTROL DEVICES SHOWN FOR ANY STAGE CONSTRUCTION SHALL REMAIN IN PLACE AND BE UTILIZED SO LONG AS NECESSARY FOR THE FOLLOWING STAGES AND SHALL BE REMOVED IMMEDIATELY WHEN NO LONGER REQUIRED. THE DEVICES MAY OR MAY NOT BE SHOWN ON THE PLANS FOR THESE FOLLOWING STAGES. REFER TO THE PLAN SHEET FOR THE INITIAL STAGE FOR THESE TRAFFIC CONTROLS.
17. EXISTING GUIDE SIGNS SHALL REMAIN IN PLACE SO LONG AS THEY DO NOT CONFLICT WITH THE CONSTRUCTION OF THIS PROJECT. WHEN IN CONFLICT, THEY SHALL BE RELOCATED ON TEMPORARY POSTS AT THE LOCATION AS DIRECTED BY THE ENGINEER. ANY DISTANCE SHOWN ON THE SIGN SHALL BE ADJUSTED ACCORDINGLY. IF THE SIGNS CANNOT BE RELOCATED, THEN THE SIGN SHALL BE REMOVED AND STORED AT A PLACE DESIGNATED BY THE ENGINEER. IF NEITHER OF THE ABOVE CAN BE DONE, THEN THE CONTRACTOR SHALL PROVIDE INTERIM GUIDE SIGNS AS COVERED IN SECTION 150.
18. (a) ON PROJECTS WITH LOW OR SOFT SHOULDERS, THE CONTRACTOR SHALL ERECT IMMEDIATELY AHEAD OF CONSTRUCTION OPERATIONS "LOW/SOFT SHOULDER" WARNING SIGNS AT THE PROJECT TERMINII, AT INTERVALS NOT TO EXCEED 1 MILE AND IMMEDIATELY PAST EACH CROSSROAD.

    (b) WHERE THE CONTRACTOR IS NOT RESPONSIBLE FOR SHOULDER CONSTRUCTION, THE DEPARTMENT WILL FURNISH THESE SIGNS FOR THE CONTRACTOR TO PICK UP, TRANSPORT, AND ERECT. THE DEPARTMENT WILL LATER REMOVE AND RETAIN THE SIGNS.

GLO				REVISED GENERAL NOTES AND LEGEND. DELETED TWO DETAILS. SPEC. BAR. SH. SPEC.	3-30-06 / 4-24-01
BY				REVISION	DATE

DEPARTMENT OF TRANSPORTATION
STATE OF GEORGIA

STANDARD
TRAFFIC CONTROL
GENERAL NOTES, STANDARD LEGEND, MISCELLANEOUS DETAILS

NO SCALE   AUG., 1999
DES. ___ DRW. ___ TRA. ___ CHK. ___
(SUBMITTED) STATE ROAD & AIRPORT DESIGN ENGINEER
(APPROVED) CHIEF ENGINEER
NUMBER 9100

GDOT TRAFFIC CONTROL GENERAL NOTES, STANDARD LEGEND, MISCELLANEOUS DETAIL
NOT TO SCALE

STATE	PROJECT NUMBER	SHEET NO.	TOTAL SHEETS
GA.			

GENERAL NOTES:

1. ALL TRAFFIC CONTROL DEVICES SHALL BE MADE AND ERECTED IN ACCORDANCE WITH THE DETAILS SHOWN ON THE PLANS; THE MUTCD; THE GEORGIA STANDARD SPECIFICATIONS, AND/OR SPECIAL PROVISIONS. (SEE SECTION 150)
2. ALL TRAFFIC CONTROL DEVICES SHALL BE AS SHOWN, OR AS DIRECTED BY THE ENGINEER. ADDITIONAL DEVICES MAY BE REQUIRED AS DIRECTED BY THE ENGINEER.
3. ALL PORTABLE SIGNS SHALL BE MOUNTED A MINIMUM OF 1FOOT ABOVE THE LEVEL OF PAVEMENT EDGE FOR DIRECTIONAL TRAFFIC OF TWO (2) LANES OR LESS AND A MINIMUM OF 7 FEET FOR DIRECTIONAL OF THREE (3) OR MORE LANES. ALL PORTABLE SIGNS AND SIGN MOUNTING DEVICES UTILIZED IN THE WORK SHALL BE NCHRP 350 COMPLIANT. PORTABLE SIGNS MAY BE USED WHEN THE DURATION OF THE WORK IS LESS THAN 3 DAYS.
4. WHEN THE CONSTRUCTION AREA HAS ENTRANCE/EXIT RAMPS OR INTERSECTIONS, WORK WILL BE PERFORMED IN SUCH A MANNER TO PERMIT TRAFFIC TO OPERATE WITH THE LEAST AMOUNT OF INCONVENIENCE AS POSSIBLE. ADDITIONAL CHANNELIZATION AND SIGNING SHALL BE INSTALLED, AS REQUIRED, TO ALLOW TRAFFIC TO REMAIN AS OPERATIONAL AS POSSIBLE. WHEN ENTRANCE RAMPS/INTERSECTIONS ARE INOPERABLE, FLAGGERS WILL BE UTILIZED TO CONTROL AND PROHIBIT MOVEMENT INTO THE PROJECT AT THAT POINT UNTIL CONSTRUCTION HAS CLEARED THE RESTRICTION SUFFICIENT TO RETURN TO OPERATIONAL STATUS.
5. FOR NIGHT TIME OPERATIONS, DRUMS SHALL HAVE, FOR THE LENGTH OF THE TAPER ONLY, A SIX (6") INCH ORANGE REFLECTIZED TOP STRIPE ON EACH DRUM IN THE TAPER AS REQUIRED IN SECTION 150. SPACING OF DEVICES SHALL BE AS SHOWN. DURING DAYLIGHT HOURS, CONES (28" MIN.) MAY BE USED IN ADVANCE OF AND THROUGHOUT WORK AREA.
6. SIGNS SHOWN HERE ARE IN ADDITION TO ALL ADVANCE WARNING SIGNS REQUIRED IN SECTION 150.
7. FLAGGERS SHALL BE PROVIDED AS NECESSARY TO PROHIBIT WRONG DIRECTION OF TRAFFIC THRU WORK AREAS.
8. WHEN NOT IN USE, PORTABLE SIGNS SHALL BE REMOVED FROM THE TRAVELWAY SO THAT THE MESSAGE IS NOT VISIBLE TO THE MOTORIST. INTERIM SIGNS THAT ARE PERMANENT MOUNTED SHALL BE COVERED WHEN NOT APPLICABLE. SEE SECTION 150.
9. PAYMENT FOR TRAFFIC CONTROL SHALL BE PER SECTION 150.
10. PAVEMENT MARKINGS FOR TEMPORARY TRAFFIC CONTROL, IF REQUIRED, SHALL BE IN ACCORDANCE WITH SECTION 150 AND AS DIRECTED BY THE ENGINEER OR SHOWN IN THE PLANS.
11. (a) ON PROJECTS WITH LOW OR SOFT SHOULDERS, THE CONTRACTOR SHALL ERECT IMMEDIATELY AHEAD OF CONSTRUCTION OPERATIONS "LOW/SOFT SHOULDER" WARNING SIGNS AT THE PROJECT TERMINI, AT INTERVALS NOT TO EXCEED ONE MILE AND IMMEDIATELY PAST EACH CROSSROAD.

    (b) WHERE THE CONTRACTOR IS NOT RESPONSIBLE FOR SHOULDER CONSTRUCTION THE DEPARTMENT WILL FURNISH THESE SIGNS FOR THE CONTRACTOR TO PICK-UP, TRANSPORT AND ERECT. THE DEPARTMENT WILL LATER REMOVE AND RETAIN THE SIGNS.
12. HIGHWAY WORK ZONE SIGNS (HWZ-2 AND HWZ-3) SHALL BE INSTALLED ON THE TRAVEL WAY AND THE INTERSECTING ROADWAY AS REQUIRED IN SECTION 150.

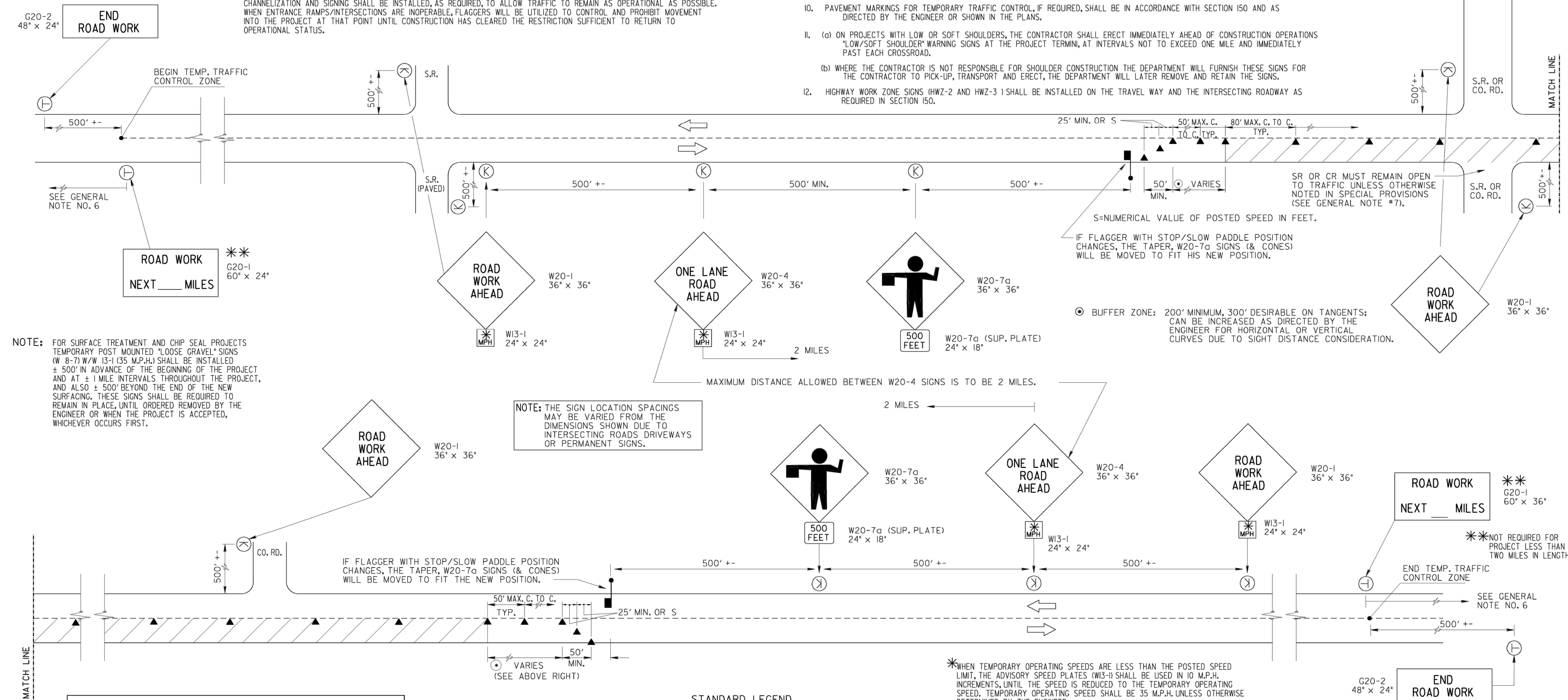

NOTE: FOR SURFACE TREATMENT AND CHIP SEAL PROJECTS TEMPORARY POST MOUNTED "LOOSE GRAVEL" SIGNS (W 8-7) W/W 13-1 (35 M.P.H.) SHALL BE INSTALLED ± 500' IN ADVANCE OF THE BEGINNING OF THE PROJECT AND AT ± 1 MILE INTERVALS THROUGHOUT THE PROJECT, AND ALSO ± 500' BEYOND THE END OF THE NEW SURFACING. THESE SIGNS SHALL BE REQUIRED TO REMAIN IN PLACE, UNTIL ORDERED REMOVED BY THE ENGINEER OR WHEN THE PROJECT IS ACCEPTED, WHICHEVER OCCURS FIRST.

* WHEN TEMPORARY OPERATING SPEEDS ARE LESS THAN THE POSTED SPEED LIMIT, THE ADVISORY SPEED PLATES (W13-1) SHALL BE USED IN 10 M.P.H. INCREMENTS, UNTIL THE SPEED IS REDUCED TO THE TEMPORARY OPERATING SPEED. TEMPORARY OPERATING SPEED SHALL BE 35 M.P.H. UNLESS OTHERWISE DETERMINED BY THE ENGINEER.

DETAIL OF G20-4 SIGN For Pilot Vehicle
IF REQUIRED OR USED ON PROJECT

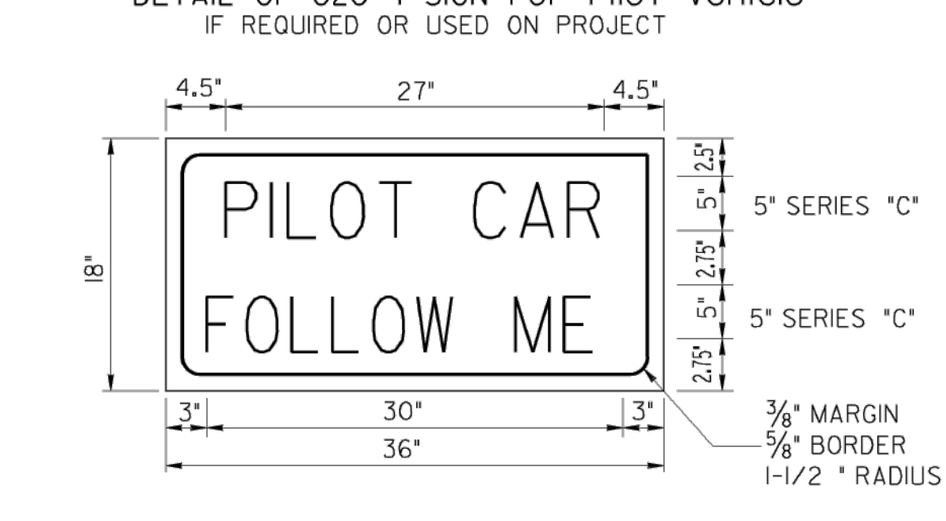

STANDARD LEGEND

- STRIPED DRUM
- PERMANENT TYPE POST MOUNTED SIGN (7' MOUNT HEIGHT)
- TEMPORARY POST MOUNTED SIGN - (7' MOUNT HEIGHT)
- PORTABLE MOUNTED SIGN - MINIMUM HEIGHT OF 1FT. ABOVE THE EDGE OF PAVEMENT; INSTALLED AS PER NCHRP 350 TESTING REQUIREMENTS.
- WORK AREA
- TRAFFIC CONE - 28" MIN. - DAYTIME USE ONLY
- FLAGGER WITH STOP-SLOW PADDLE

GLO		REMOVED FLAGS AND REV. GENERAL NOTES, REV. SIGN G20-2A TO G20-2.	3-30-06
BY		REVISION	DATE

DEPARTMENT OF TRANSPORTATION
STATE OF GEORGIA

STANDARD
TRAFFIC CONTROL DETAIL
FOR LANE CLOSURE
ON TWO-LANE HIGHWAY

NO SCALE   REV. & REDR. JULY, 1999
DES. ___ DRW. ___ TRA. ___ CHK. ___
(SUBMITTED) STATE ROAD & AIRPORT DESIGN ENGINEER
(APPROVED) CHIEF ENGINEER
NUMBER 9102

GDOT TRAFFIC CONTROL DETAIL
NOT TO SCALE

STATE	PROJECT NUMBER	SHEET NO.	TOTAL SHEETS
GA.			

NOTE "B":
CURVE DESIGNS OR LANE SHIFTS SHALL BE AS SHOWN IN THE PLANS OR AS SUBMITTED BY THE CONTRACTOR WITH D.O.T. APPROVAL DESIGNS WHICH NECESSITATE SPEED REDUCTIONS WILL REQUIRE W13-1 SIGNING. *

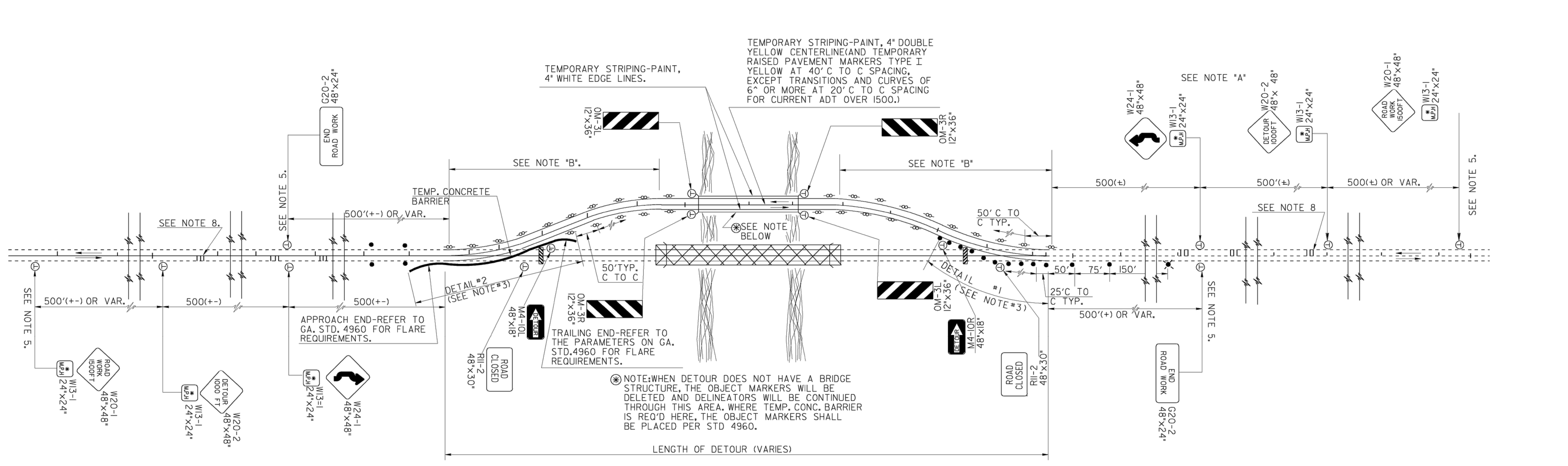

SEE NOTE "A"

* WHEN TEMPORARY OPERARATING SPEEDS ARE LESS THAN THE POSTED SPEED LIMIT, THE ADVISORY SPEED PLATE (W13-1) SHALL BE USED IN 10 M.P.H. INCREMENTS UNTIL THE SPEED IS REDUCED TO TEMPORARY OPERATING SPEED.

STANDARD LEGEND

- STRIPED DRUM
- TEMPORARY POST MOUNTED SIGN - (7' MOUNT HEIGHT)
- TYPE I CLEAR (WHITE) DELINEATOR DOUBLE FACE
- TYPE III BARRICADES

NOTE "A":
WHERE THE LENGTH OF DETOUR EXCEEDS 1/2 MILE, OMIT THE W24-1 SIGN AND SUBSTITUTE A W1-4L (OR W1-4R) SIGN 500'+- IN ADVANCE OF BEGINNING CURVE OR LANE SHIFT WITH A W1-4R (OR W1-4L) SIGN ALSO ADDED WHERE THE ALIGNMENT REVERSES. THIS COMBINATION IS REQUIRED FOR BOTH DIRECTIONS OF TRAFFIC. ADVISORY SPEED PLATES ARE REQUIRED WITH W1-4L AND W1-4R SIGNS UNLESS APPROVED OTHERWISE.

GENERAL NOTES:

1. UNLESS SPECIFIED OTHERWISE IN THE PLANS, THE DETOUR PAVEMENT STRUCTURE SHALL CONSIST OF 8" MIN. GRADED AGGREGATE BASE COURSE, 19 mm Superpave- 220 lb/yd² COURSE AND 12.5 mm Superpave- 165 lb/yd² SURFACE COURSE AS APPROVED BY THE ENGINEER.
2. USABLE SHOULDERS SHALL NOT BE PAVED.
3. EXISTING ROAD MAY BE CLOSED BY EITHER DETAIL #1OR #2 AS SHOWN IN THE PLANS OR AS DIRECTED BY THE ENGINEER. ENGINEER MAY SPECIFY TEMP. CONC. BARRIER AT OTHER LOCATIONS.
4. WHEN TRAFFIC CONTROL IS LISTED AS A PAYMENT ITEM IN THE PROPOSAL, PAYMENT WILL BE MADE BY THE LUMP SUM BID, OTHERWISE ALL THE TRAFFIC CONTROL COST WILL BE INCLUDED IN THE OVER-ALL BID SUBMITTED EXCEPT AS SPECIFIED BELOW. THE UNCLASSIFIED EXCAVATION, BORROW, MISCELLANEOUS STRUCTURES (INCLUDING BRIDGES), BASE, BITUMINOUS TACK COAT, PAVING, ETC. THAT WILL BE NEEDED TO CONSTRUCT THE DETOUR WILL BE PAID FOR SEPARATELY UNDER PROPER PAYMENT ITEMS. ALSO, THE TEMPORARY CONCRETE BARRIER WALL WILL BE PAID FOR SEPARATELY UNDER PROPER PAYMENT ITEMS.
5. WHERE THE LENGTH OF PROJECT EXCEEDS THE DETOUR LENGTH, THE LOCATIONS OF W20-1 AND G20-2 SIGNS SHALL BE VARIED AS DIRECTED BY THE ENGINEER TO CORRESPOND WITH THE BEGINNING AND THE END OF THE PROJECT.
6. SIGNS SHOWN HERE ARE IN ADDITION TO ALL ADVANCE WARNING SIGNS REQUIRED BY SECTION 150.
7. TRAFFIC CONTROL SHOWN IS FOR A TYPICAL BY-PASS DETOUR, ADDITIONAL TRAFFIC CONTROL MAY BE SPECIFIED FOR INDIVIDUAL CONDITIONS AS DIRECTED BY THE ENGINEER, AS SHOWN ON THE PLANS, OR IN SPECIAL PROVISIONS.
8. SEE SEPARATE SHEET FOR DETAILS IF RUMBLE STRIPS ARE SPECIFIED ON THE TRAVEL LANES.
9. TEMPORARY PIPES, INLETS, END SECTIONS, ETC. ARE INCLUDED IN PAYMENT FOR TRAFFIC CONTROL AND SHALL REMAIN THE PROPERTY OF THE CONTRACTOR AFTER REMOVAL
10. THIS STANDARD MAY BE USED FOR 3-LANE HIGHWAY BY MODIFYING PAVEMENT MARKINGS IN ACCORDANCE WITH THE MUTCD.

NOTE: FOR GENERAL NOTES, LEGEND, & MISC. DETAILS, REFER TO: "TRAFFIC CONTROL GENERAL NOTES, STD. LEGEND AND MISC. DETAILS"

GLO		REMOVED FLAGS AND REV. W1-5 SIGN TO W-24-1.	3-30-06
BY		REVISION	DATE

DEPARTMENT OF TRANSPORTATION
STATE OF GEORGIA

STANDARD
TRAFFIC CONTROL DETAIL
TYPICAL BY-PASS DETOUR
FOR 2-LANE HIGHWAY

NO SCALE   JAN., 2001
DES. ___ DRW. ___ TRA. ___ CHK. ___
(SUBMITTED) STATE ROAD & AIRPORT DESIGN ENGINEER
(APPROVED) CHIEF ENGINEER
NUMBER 9108

GDOT TYPICAL TRAFFIC CONTROL BY-PASS FOR TWO-LANE HIGHWAY DETAIL
NOT TO SCALE

ESG ENGINEERING
6400 Peake Rd
Macon, GA 31210
Ph: (478) 474-4996
Fax: (478) 474-5045

GROUNDWATER WELLS #4 & #5
FOR THE
CITY OF FLOWERY BRANCH

REVISIONS

NO.	DESCRIPTION	DATE
1	ESPC SHEETS	11-7-25
2	REVISED WITH CITY COMMENTS	12-1-25

CONFORMED SET

GEORGIA REGISTERED PROFESSIONAL ENGINEER No. PE046341 ANDREW D SWICEGOOD

DRAWN BY: DSC
CHECKED BY: ADS
DATE: OCT 2025
SCALE: N.T.S.

CONTENT:
CONSTRUCTION DETAILS

SHEET NO:
C9.6

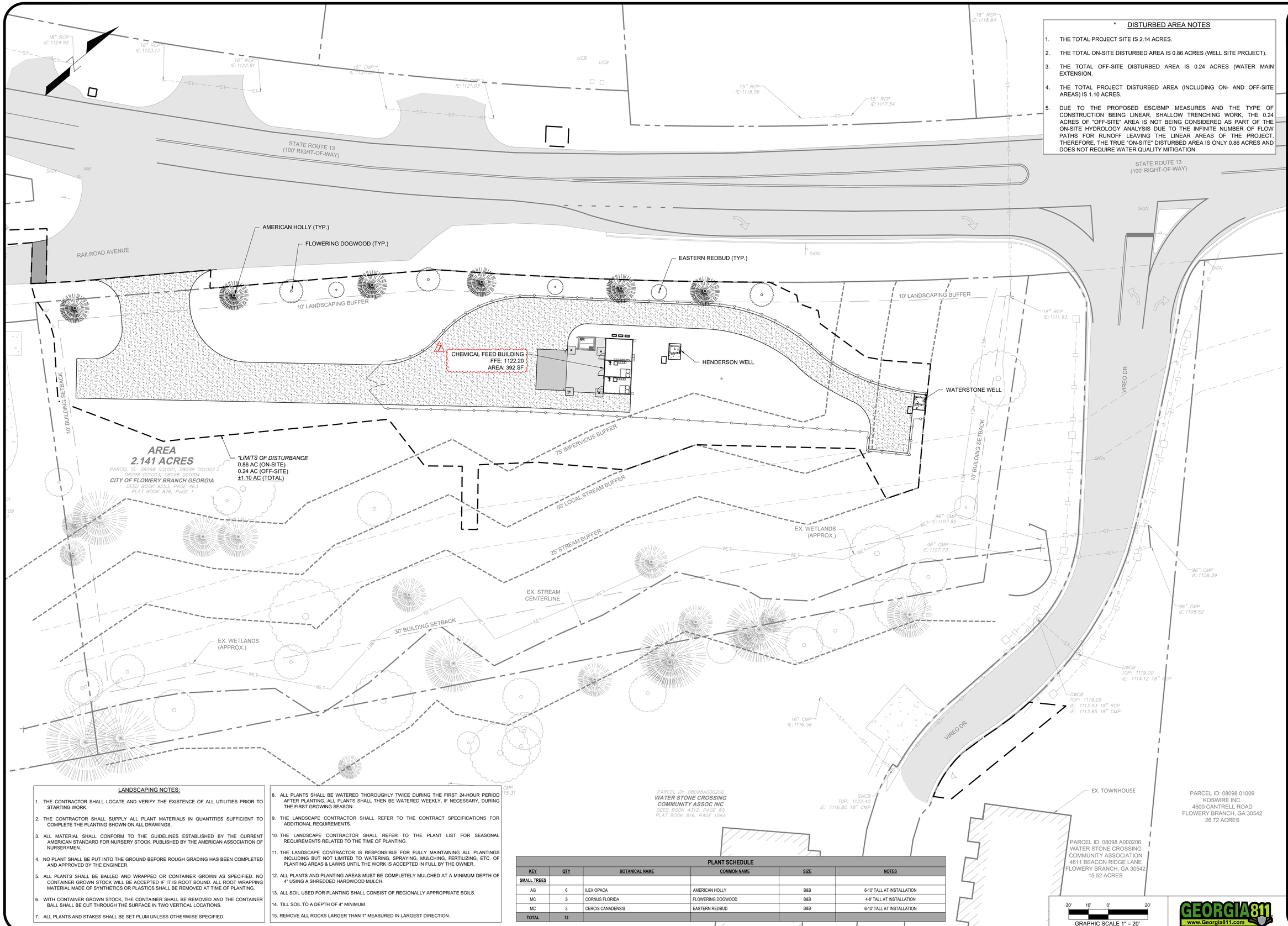

* DISTURBED AREA NOTES

1. THE TOTAL PROJECT SITE IS 2.14 ACRES.
2. THE TOTAL ON-SITE DISTURBED AREA IS 0.86 ACRES (WELL SITE PROJECT).
3. THE TOTAL OFF-SITE DISTURBED AREA IS 0.24 ACRES (WATER MAIN EXTENSION.
4. THE TOTAL PROJECT DISTURBED AREA (INCLUDING ON- AND OFF-SITE AREAS) IS 1.10 ACRES.
5. DUE TO THE PROPOSED ESC/BMP MEASURES AND THE TYPE OF CONSTRUCTION BEING LINEAR, SHALLOW TRENCHING WORK, THE 0.24 ACRES OF "OFF-SITE" AREA IS NOT BEING CONSIDERED AS PART OF THE ON-SITE HYDROLOGY ANALYSIS DUE TO THE INFINITE NUMBER OF FLOW PATHS FOR RUNOFF LEAVING THE LINEAR AREAS OF THE PROJECT. THEREFORE, THE TRUE "ON-SITE" DISTURBED AREA IS ONLY 0.86 ACRES AND DOES NOT REQUIRE WATER QUALITY MITIGATION.

LANDSCAPING NOTES:

1. THE CONTRACTOR SHALL LOCATE AND VERIFY THE EXISTENCE OF ALL UTILITIES PRIOR TO STARTING WORK.
2. THE CONTRACTOR SHALL SUPPLY ALL PLANT MATERIALS IN QUANTITIES SUFFICIENT TO COMPLETE THE PLANTING SHOWN ON ALL DRAWINGS.
3. ALL MATERIAL SHALL CONFORM TO THE GUIDELINES ESTABLISHED BY THE CURRENT AMERICAN STANDARD FOR NURSERY STOCK, PUBLISHED BY THE AMERICAN ASSOCIATION OF NURSERYMEN.
4. NO PLANT SHALL BE PUT INTO THE GROUND BEFORE ROUGH GRADING HAS BEEN COMPLETED AND APPROVED BY THE ENGINEER.
5. ALL PLANTS SHALL BE BALLED AND WRAPPED OR CONTAINER GROWN AS SPECIFIED. NO CONTAINER GROWN STOCK WILL BE ACCEPTED IF IT IS ROOT BOUND. ALL ROOT WRAPPING MATERIAL MADE OF SYNTHETICS OR PLASTICS SHALL BE REMOVED AT TIME OF PLANTING.
6. WITH CONTAINER GROWN STOCK, THE CONTAINER SHALL BE REMOVED AND THE CONTAINER BALL SHALL BE CUT THROUGH THE SURFACE IN TWO VERTICAL LOCATIONS.
7. ALL PLANTS AND STAKES SHALL BE SET PLUM UNLESS OTHERWISE SPECIFIED.
8. ALL PLANTS SHALL BE WATERED THOROUGHLY TWICE DURING THE FIRST 24-HOUR PERIOD AFTER PLANTING. ALL PLANTS SHALL THEN BE WATERED WEEKLY, IF NECESSARY, DURING THE FIRST GROWING SEASON.
9. THE LANDSCAPE CONTRACTOR SHALL REFER TO THE CONTRACT SPECIFICATIONS FOR ADDITIONAL REQUIREMENTS.
10. THE LANDSCAPE CONTRACTOR SHALL REFER TO THE PLANT LIST FOR SEASONAL REQUIREMENTS RELATED TO THE TIME OF PLANTING.
11. THE LANDSCAPE CONTRACTOR IS RESPONSIBLE FOR FULLY MAINTAINING ALL PLANTINGS INCLUDING BUT NOT LIMITED TO WATERING, SPRAYING, MULCHING, FERTILIZING, ETC. OF PLANTING AREAS & LAWNS UNTIL THE WORK IS ACCEPTED IN FULL BY THE OWNER.
12. ALL PLANTS AND PLANTING AREAS MUST BE COMPLETELY MULCHED AT A MINIMUM DEPTH OF 4" USING A SHREDDED HARDWOOD MULCH.
13. ALL SOIL USED FOR PLANTING SHALL CONSIST OF REGIONALLY APPROPRIATE SOILS.
14. TILL SOIL TO A DEPTH OF 4" MINIMUM.
15. REMOVE ALL ROCKS LARGER THAN 1" MEASURED IN LARGEST DIRECTION.

PLANT SCHEDULE

KEY	QTY	BOTANICAL NAME	COMMON NAME	SIZE	NOTES
SMALL TREES					
AG	6	ILEX OPACA	AMERICAN HOLLY	B&B	6-10' TALL AT INSTALLATION
MC	3	CORNUS FLORIDA	FLOWERING DOGWOOD	B&B	4-8' TALL AT INSTALLATION
MC	3	CERCIS CANADENSIS	EASTERN REDBUD	B&B	6-10' TALL AT INSTALLATION
TOTAL	12				

ESG ENGINEERING
6400 Peake Rd
Macon, GA 31210
Ph: (478) 474-4996
Fax: (478) 474-5045

GROUNDWATER WELLS #4 & #5

FOR THE
CITY OF FLOWERY BRANCH

REVISIONS		
NO.	DESCRIPTION	DATE
1	ESPC SHEETS	11-7-25
2	BID SET OF PLANS	12-1-25
3	REVISED WITH CITY COMMENTS	12-5-25
4	ADDENDUM #1	12-8-25
5	ADDENDUM #2	12-11-25
6	ADDENDUM #3	12-12-25
7	REVISED WITH CITY COMMENTS	12-17-25

CONFORMED SET

GEORGIA REGISTERED No. PE046341 PROFESSIONAL ENGINEER ANDREW D SWICEGOOD

DRAWN BY: DSC
CHECKED BY: ADS
DATE: OCT 2025
SCALE: SEE SCALE

CONTENT:

LANDSCAPING:
LANDSCAPING PLAN

SHEET NO: 3 / 7

L1.0

GEORGIA811 www.Georgia811.com

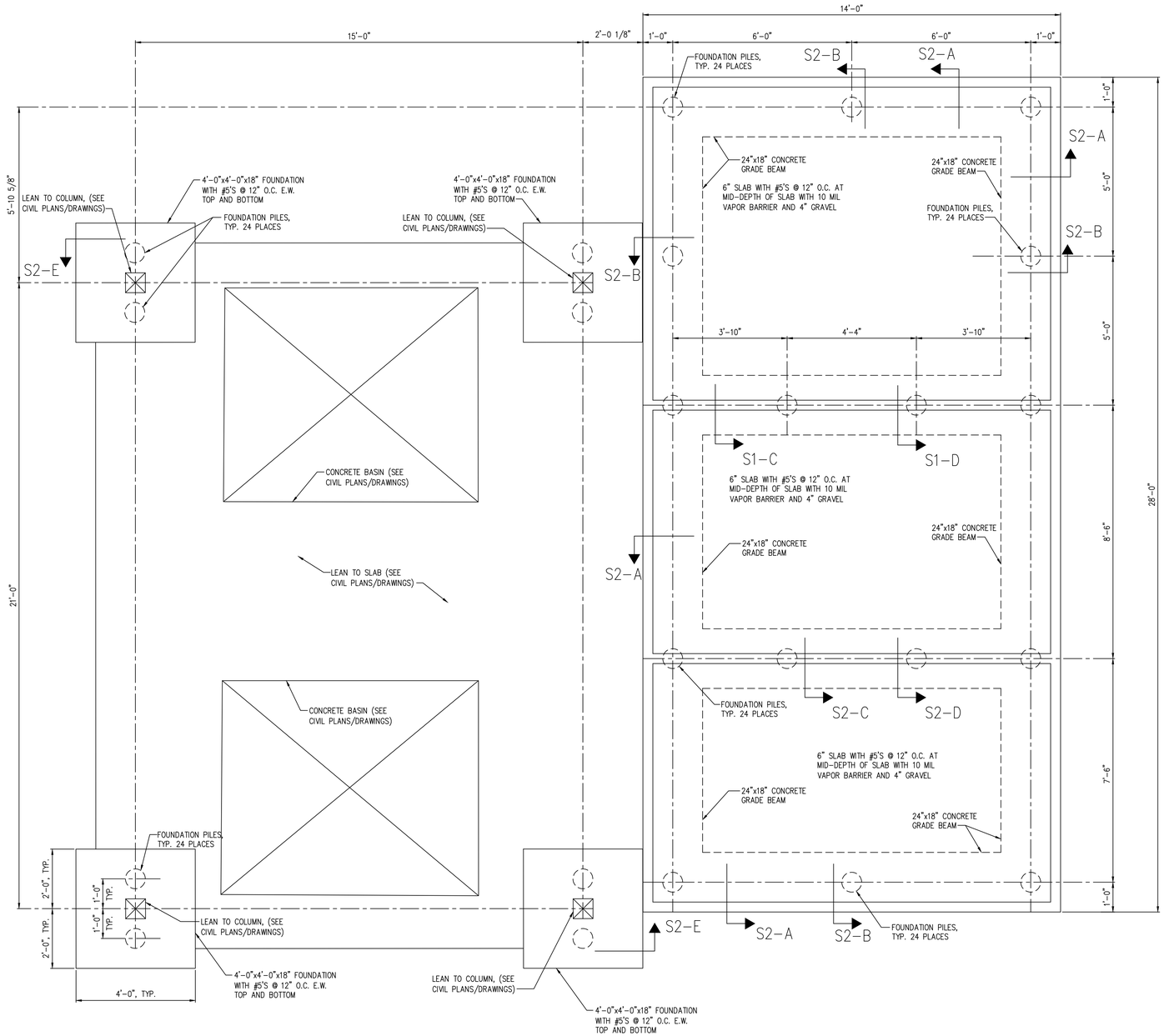

FOUNDATION PLAN

NO SCALE

NOTE: COORDINATE BUILDING ANCHORAGE REQUIREMENTS WITH MANUFACTURER'S DRAWINGS

REINFORCED CONCRETE GENERAL NOTES

1. ALL CONCRETE WORK SHALL CONFORM TO ACI 301, "SPECIFICATIONS FOR STRUCTURAL CONCRETE FOR BUILDINGS". DESIGN IS BASED ON ACI 318, "BUILDING CODE REQUIREMENTS FOR STRUCTURAL CONCRETE."
2. CONCRETE SHALL BE NORMAL WEIGHT (150 PCF) AND SHALL DEVELOP A MINIMUM COMPRESSIVE STRENGTH OF 4500 PSI AT 28 DAYS.
3. SUBMIT CONCRETE MIX DESIGNS FOR REVIEW, IN ACCORDANCE WITH ACI 318 TO THE EOR AND TESTING AGENCY.
4. THE PROPOSED MATERIALS AND MIX DESIGN SHALL BE FULLY DOCUMENTED AND REVIEWED. RESPONSIBILITY FOR OBTAINING THE REQUIRED DESIGN STRENGTH IS THE CONTRACTOR'S.
5. USE OF CALCIUM CHLORIDE, CHLORIDE IONS, OR OTHER SALTS IN CONCRETE IS NOT PERMITTED.
6. THE AIR CONTENT AT THE POINT OF PLACEMENT SHALL BE PER ACI 318 TABLE 4.2.1 FOR MODERATE EXPOSURE.
7. THE TESTING AGENCY SHALL SAMPLE AND TEST EACH 100 CU. YARDS OR FRACTION THEREOF OF EACH CLASS OF CONCRETE PLACED EACH DAY. SAMPLE CONCRETE IN ACCORDANCE WITH ASTM C172. PERFORM THE FOLLOWING TESTS IN ACCORDANCE WITH THE INDICATED STANDARD:

   SLUMP: ASTM C143

   AIR CONTENT: ASTM C231 (NORMAL WEIGHT CONCRETE) ASTM C173 (LIGHT WEIGHT CONCRETE)

   COMPRESSIVE STRENGTH: ASTM C39, WITH ONE CYLINDER AT 7 DAYS, 2 CYLINDERS AT 28 DAYS, AND ONE SPECIMEN HELD IN RESERVE.

   CONCRETE TEMPERATURE: ASTM C1064

   UNIT WEIGHT: ASTM C567
8. MOIST CURE CONCRETE WITH MOISTURE PROTECTIVE COVER FOR A MINIMUM OF 7 DAYS. CURING COMPOUNDS PERMITTED IF COMPATIBLE WITH ANY PLANNED FLOOR FINISHES
9. REINFORCING STEEL SHALL CONFORM TO ASTM A615, GRADE 60, UNLESS NOTED OTHERWISE.
10. TIE ALL REINFORCING STEEL AND EMBEDMENTS SECURELY IN PLACE PRIOR TO PLACING CONCRETE. PROVIDE SUFFICIENT SUPPORTS TO MAINTAIN THE POSITION OF REINFORCEMENT WITHIN SPECIFIED TOLERANCES DURING ALL CONSTRUCTION ACTIVITIES. "STICKING" DOWELS INTO WET CONCRETE IS NOT PERMITTED.
11. REINFORCING STEEL SHALL HAVE THE FOLLOWING CONCRETE COVER UNLESS NOTED OTHERWISE:

    CONCRETE CAST AGAINST EARTH (NOT FORMED): 3"

    FORMED CONCRETE EXPOSED TO EARTH OR WEATHER
    #6 BARS THROUGH #12 BARS 2"
    #5 BARS AND SMALLER 2"

    CONCRETE NOT EXPOSED TO EARTH OR WEATHER
    SLABS AND WALLS 1"
12. DO NOT WELD OR TACK WELD REINFORCING STEEL UNLESS APPROVED OR DIRECTED BY THE STRUCTURAL ENGINEER.

SOIL PARAMETERS

1. SOIL PARAMETERS
   A. SHALLOW FOUNDATIONS WERE ASSUMED TO BE INSUFFICIENT TO SUPPORT BUILDING DUE TO POOR SOIL CONDITIONS. DEEP FOUNDATION ELEMENTS ARE REQUIRED TO SUPPORT THE BUILDING.
   B. RECOMMENDATION IS BASED ON THE FOLLOWING SOILS REPORT:
      DRINKING WATER SITE
      GEOTECHNICAL ENGINEERING REPORT
      TERRACON PROJECT NO. HN255025
      DATED APRIL 3, 2025
2. IF SITE CONDITIONS DIFFER FROM THOSE INDICATED, THE DESIGN PROFESSIONAL SHALL BE NOTIFIED IMMEDIATELY.
3. ALL FOUNDATION WORK SHALL BE DONE 'IN THE DRY'.

GENERAL NOTES

1. DESIGN LOADS
   A. BUILDING LOAD ..... 120,000 LBS.
   B. SLAB LIVE LOAD ..... 100 PSF
   C. ROOF LIVE LOAD ..... 20 PSF
2. CODES:
   A. INTERNATIONAL BUILDING CODE, 2018 ED. WITH LATEST GEORGIA AMENDMENTS.
   B. REINFORCED CONCRETE: ACI 318-14.
3. FOUNDATION DESIGN ASSUMES ALL INTERIOR WALLS ARE LOAD BEARING AND BUILDING WEIGHT IS UNIFORMLY DISTRIBUTED TO FOUNDATION.
4. SHOP DRAWINGS GENERAL NOTES: THE PLANS, SECTIONS, AND DETAILS PROVIDED AS PART OF THE CONTRACT DOCUMENTS SHALL NOT BE USED IN A REPRODUCIBLE FORM AS PART OF THE SHOP DRAWINGS. ALL FABRICATORS & SUPPLIERS SHALL ANTICIPATE THAT REVISIONS TO SUBMITTALS MAY BE REQUIRED. THIS INCLUDES MODIFICATIONS TO DETAILS THAT ARE CHANGED FOR COORDINATION PURPOSES. NO ADDITIONAL FEES ARE PERMITTED FOR REVISING SUBMITTALS FOR WORK DESCRIBED IN THE CONTRACT DOCUMENTS.
5. CONTRACTOR TO FIELD VERIFY ALL DIMENSIONS AND ELEVATIONS BEFORE BEGINNING CONSTRUCTION.
6. SEE ESG DRAWINGS AND SPECIFICATIONS FOR REQUIREMENTS ON FLOOR AND WALL COATINGS

FOUNDATION PILE NOTES (PER UNIT)

1. IT IS THE INTENT OF THIS CONTRACT REQUIREMENT TO PROVIDE:
   A. VERTICAL FOUNDATION PILES (24 TOTAL) OF SIZE AND DETAIL THAT WILL ACHIEVE NOT LESS THAN 50,000 POUNDS ULTIMATE (25,000 POUNDS WORKING) COMPRESSION CAPACITY, AND 10,000 POUNDS ULTIMATE (5,000 POUNDS WORKING) TENSION CAPACITY, BEFORE FAILURE.
2. INSTALLATION OF PILES IS TO BE PERFORMED BY A PILE CONTRACTOR APPROVED BY THE OWNER.
3. MINIMUM VERTICAL PILE LENGTH SHALL BE 28 FEET REGARDLESS OF FIELD DETERMINED EXCESS CAPABILITY, EXCEPT THAT, IF DURING CONSTRUCTION PROGRESS, IT IS DETERMINED THAT ANY EXCESSIVE CAPACITY ACHIEVED DURING INSTALLATION IS CAUSING DELAYS OR UNDUE HARDSHIP, THE OWNER RESERVES THE RIGHT TO WAIVE THIS REQUIREMENT (BUT NOT BELOW SPECIFIED ULTIMATE CAPACITY) WITH APPROPRIATE CONTRACT AND CONTRACT PRICE CHANGES AGREED UPON BY OWNER AND CONTRACTOR.
4. PILE CONTRACTOR SHALL HAVE ALL REASONABLE ACCESS TO THE SITE, BOTH BEFORE AND AFTER SUCCESSFUL BIDDING, BUT SCHEDULING SHALL BE COORDINATED WITH THE EOR/OWNER. ALL INSURANCE, SAFETY, LEGAL, AND OTHER AGREED UPON REQUIREMENTS SHALL BE MET BY THE PILE CONTRACTOR BEFORE PERFORMING ANY WORK. IT SHALL BE THE RESPONSIBILITY OF THE PILE CONTRACTOR TO REVIEW THE SITE TO THEIR SATISFACTION PRIOR TO BIDDING. NO CONTRACT CHANGES ARE PERMISSIBLE BECAUSE OF LACK OF KNOWLEDGE OF REASONABLY ACCESSIBLE FEATURES ON THE SITE.
5. SOIL TEST REPORTS ARE INCLUDED IN THE BID PACKAGE. ANY INFERENCE DRAWN FROM THE REPORT, EXCEPT WHERE THE REPORT MIGHT BE FOUND ERRONEOUS, SHALL BE THE RESPONSIBILITY OF THE PILE CONTRACTOR.
6. DESIGN OF ALL PILE COMPONENTS TO MEET REQUIREMENTS SHALL BE PERFORMED BY A PROFESSIONAL ENGINEER REGISTERED IN THE STATE OF GEORGIA, EITHER EMPLOYED BY, OR RETAINED BY THE CONTRACTOR, WHO IS QUALIFIED AND EXPERIENCED IN THE EVALUATION OF THE PILE SYSTEM. SIGNED AND SEALED CALCULATIONS SHALL BE PROVIDED TO THE EOR/OWNER FOR REVIEW. CALCULATIONS SHALL INCLUDE AN ANALYSIS OF THE PILE FOR BUCKLING.
7. PILE CONTRACTOR SHALL PROVIDE WITH THEIR BID A RESUME OF JOBS OF SIMILAR DETAIL AND QUANTITY THAT THEY HAVE PERFORMED.
8. WORK SHALL BE PERFORMED IN AN ORDERLY AND WORKMANLIKE FASHION. SCHEDULING SHALL BE MAINTAINED. PILES SHALL BE LOCATED WITHIN APPROXIMATELY 3" OF THEIR SHOWN LOCATION, AND SHALL BE BATTERED AS SHOWN. PILE CONTRACTOR SHALL PROVIDE ALL LABOR AND MATERIALS AS REQUIRED AND SHALL HAVE A FULL-TIME SUPERINTENDENT ON SITE FOR THE DURATION OF CONSTRUCTION. DAILY RECORDS SHALL BE MADE AND MAINTAINED ON SITE. RECORDS SHALL BE MADE AVAILABLE TO EOR UPON REQUEST. RECORDS SHALL INCLUDE PILE DEPTH TORQUE LOG AND ESTIMATED CAPACITY.
9. AT THE END OF EACH WORK DAY, THE AREA AROUND THE FOUNDATION SITE SHALL BE LEFT IN A CONDITION THAT WILL NOT INTERFERE WITH OTHER TRADES OR THAT WILL NOT POSE A DANGER TO OTHERS ON SITE.
10. CONTRACTOR SHALL PROPOSE AN ALTERNATIVE ADDITIVE TEST PILE PROGRAM AT THE BEGINNING OF THE PROJECT. THE PROGRAM SHALL CONFIRM THE PILE DESIGN MEETS THE REQUIRED COMPRESSION AND TENSION CAPACITY. TESTING SHALL BE OBSERVED BY THE OWNER AND/OR THE OWNER'S REPRESENTATIVE.

CONFORMED SET

NO.	DESCRIPTION	DATE	BY
1	LEAN TO ADDITION	12.10.25	MNE
0	ISSUED FOR CONSTRUCTION	12.4.25	MNE

GEORGIA REGISTERED No. PEF003000 STRUCTURAL ENGINEER MATTHEW N. ELLIS
12.4.25
Pi-Tech, Inc. COA#PEF003000
COA Expiration: 6.30.2026

DRAWN BY: PEJ
CHECKED BY: MNE
DATE: 12.4.2025
SCALE: AS SHOWN

PI-TECH, INC.
115 FOREST HILL RD
MACON, GA 31210
478.743.5600
www.pi-techinc.com

FLOWERY BRANCH CHEM. BUILDING
FOR
ESG ENGINEERING
MACON, GA

SHEET NO. S1
SHEET 1 OF 2

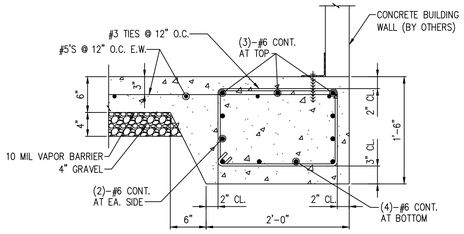

S2-A

NO SCALE

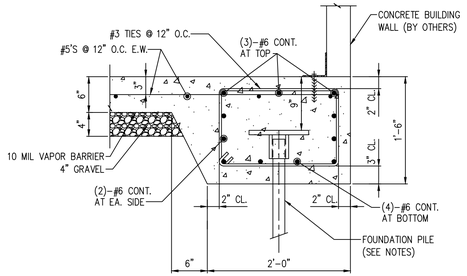

S2-B

NO SCALE

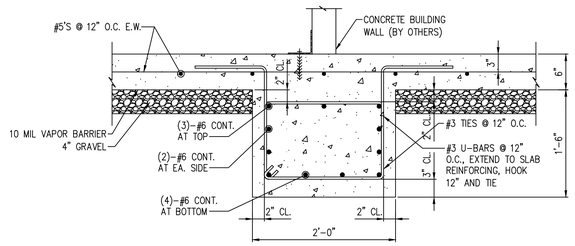

S2-C

NO SCALE

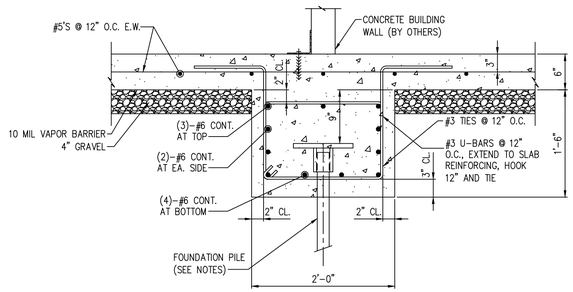

S2-D

NO SCALE

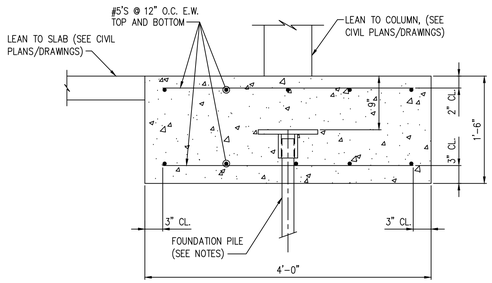

S2-E

NO SCALE

CONFORMED SET

NO.	DESCRIPTION	DATE	BY
1	LEAN TO ADDITION	12.10.25	MNE
0	ISSUED FOR CONSTRUCTION	12.4.25	MNE

GEORGIA REGISTERED No. SE000062 STRUCTURAL ENGINEER MATTHEW N. ELLIS

12.4.25
Pi-Tech, Inc. COA#PEF003000
COA Expiration: 6.30.2026

DRAWN BY: PEJ
CHECKED BY: MNE
DATE: 12.4.2025
SCALE: AS SHOWN

Pi-Tech
www.pi-techinc.com
PI-TECH, INC.
115 FOREST HILL RD
MACON, GA 31210
478.743.5600

FLOWERY BRANCH CHEM. BUILDING
FOR
ESG ENGINEERING
MACON, GA

SHEET NO. S2
SHEET 2 OF 2

MECHANICAL SPECIFICATIONS

1) Provide all heating, ventilation and air conditioning items indicated on the drawings, described in this specification or required for a complete and proper installation.

2) Comply with all pertinent codes, ordinances and regulations. Refer to website for Dept. of Community Affairs for current Codes Editions.

3) The contractor shall not attempt to precisely scale dimensions from these drawings to obtain construction dimensions and clearances. The contractor shall verify all actual dimensions and clearances. Although these plans are diagrammatic in nature, they shall be followed as closely as site conditions, new construction, and work by other trades shall permit. Deviations from these drawings, which are required to conform to the available space or the actual building construction, shall be made at no additional cost to the owner.

4) Furnish without extra charge, any additional material and labor required to comply with the above codes and standards, even though the work may not be described in the contract documents. Where the requirements of the contract documents exceed the requirements of the above codes and standards, the contract documents shall take precedence.

5) All equipment and material shall be new and of first quality. Equipment and material shall be the same or equal to the basis of design listed on these drawings and shall be UL listed.

6) Cooperate and coordinate with other trades in order that all systems in the work may be installed in the best arrangement.

7) Examine the areas and conditions under which work of this section will be installed. Correct conditions detrimental to the proper and timely completion of the work. Notify Architect of any discrepancies. Do not proceed until unsatisfactory conditions have been corrected.

8) Avoid interference with structure, and with work of other trades. Install all equipment per manufacturer's instructions. Install accessible parts, including equipment, coils, valves, dampers, controls, and filters with adequate clearance for inspection, adjustments, repair and replacement.

9) All other materials not specifically described but required for a complete and proper installation shall be as selected by the contractor subject to acceptance by the Engineer.

10) All ductwork shall be fabricated from galvanized sheet metal duct and conform to SMACNA "HVAC Duct Construction Standards–Metal and Flexible. Seal all joints in ductwork with mastic sealant.

11) Refrigerant piping shall conform to manufacturer's recommendations and installation instructions. Refrigerant piping shall be ASTM B280 Type ACR or ASTM B88 Type L drawn copper tubing with wrought copper fittings. Insulate suction line with ½" thick flexible foamed plastic cellular foam (Armaflex or equivalent). All piping shall be adequately supported. Insulation installed outdoors shall be painted with two coats of Armacell WB coating or equivalent. Refrigerant pipes shall be installed in accordance with ASHRAE standard 15–2022 section 9.12 and shall be tested in accordance with ASHRAE standard 15–2022 section 9.13. Contractor shall issue a letter to design team stating that refrigerant pipes has been installed and tested under the referenced sections. Contractor shall refer to ASHRAE standard 15–2022 sections 9.10 and 9.11 for additional information regarding refrigerant piping. Penetration of refrigerant pipes shall be protected with a through penetration protection means. The through penetration protection shall be the same or higher rating than the assembly.

12) Thermostats: Provide 24 volt, programmable 24–hour, 7–day thermostat to control heating stages in sequence with delay between stages and supply fan to maintain temperature setting. For Heat Pumps include system selection switch heat–off–cool and fan control switch (auto–on), emergency heat switch (auxiliary/emergency heat indicator lights).

13) Provide fire and smoke rated flexible connections between fans and ducts. Material shall comply with NFPA 90A requirements for material in supply air stream.

14) Install all equipment in accordance with manufacturer's instructions and recommendations including clearances recommended for proper operation or service. All filters and serviceable parts shall be readily accessible.

15) Do not cut into or reduce the size of any structural member without the permission of the Architect.

16) Provide weather–proof flashing at all duct and pipe penetrations through the building walls and roof. As a minimum, flashings shall be designed and installed in accordance with SMACNA standards. Flashings shall be guaranteed weatherproof.

17) Support all HVAC units, ductwork, piping and other appurtenances from structure, provide vibration isolation at all fans which are not internally isolated. Provide hanger rod with built in rubber–in–shear isolator. Between drain pan and unit provide 4 each rubber–in–shear isolator. Do not attach vibration isolator to drain pan. Do not screw or drive fasteners into non–structural components such as roof decks or non–load bearing walls.

18) Thoroughly clean all components and remove all dirt, scale, oil, and other foreign substances. Provide clean air filters for all equipment.

19) Perform all tests necessary to demonstrate the integrity of the complete installation to the approval of the Engineer and all other authorities having jurisdiction. Make all adjustments necessary and balance the completed system in accordance with the data shown. Balance the systems in accordance with NEBB or AABC standards. Acceptable tolerances shall be minus ten percent to plus five percent of all measurements. Balancing shall be done by an independent licensed (by NEBB or AABC) TAB contractor. Make the following tests and submit reports to the Architect:
   a) Airflow rate at each supply, return and exhaust outlet or inlet.
   b) Total airflow rate and total static pressure for each supply and exhaust fan. Test exhaust fans with room doors closed.
   c) Motor speed, for multiple speed fans (e.g. high, medium, low).
   d) For direct drive fans, provide speed settings and actual rpm, including ECM motor driven fans
   e) Provide fan and motor rpm for belt driven fans. Provide sheave sizes.
   f) Outside airflow rate to each HVAC unit and supply fan.
   g) Motor current (and compare with nameplate data) at all motors.
   h) Entering and leaving air dry–bulb and wet–bulb conditions at all cooling coils.
   i) Heat output capacity for unit heaters, heating devices and coils (kW or MBH).
   j) Manufacturer, model and serial number for each piece of HVAC equipment scheduled on drawings.
   k) Calibrate thermostats to be within one degree of actual temperature at thermostat.
   l) Verify that all HVAC devices operate as scheduled or indicated (i.e. ON–OFF, 2–stage, variable output (SCR heaters), etc.

20) The entire system shall be warranted for a period of one (1) year beginning with Owner's acceptance of the work. Compressors shall include a minimum of five (5) year parts only warranty from the manufacturer. All labor and materials necessary to repair or replace the system or portions thereof, during that time shall be warranted for a period of one (1) year from the repair of replacement.

21) Up Blast fan (direct drive): Side wall mounted exhaust fans shall be upblast centrifugal direct drive type. The fan wheel shall be centrifugal backward inclined, constructed of aluminum and shall include a wheel cone carefully matched to the inlet cone for precise running tolerances. Wheels shall be statically and dynamically balanced. The fan housing shall be constructed of heave gauge aluminum with a rigid internal support structure. Wind bands shall have a rolled bead for added strength and shall be joined to curb caps with a leak–proof, continuously welded seam. Motors shall be mounted out of the airstream on vibration isolators. Fresh air for motor cooling shall be drawn into the motor compartment from an area free of discharge contaminants. Motors shall be readily accessible for maintenance. A disconnect switch shall be factory installed and wired from the fan motor to a junction box within the motor compartment. A conduit chase shall be provided through the curb cap to the motor compartment for ease of electrical wiring. All fans shall bear the AMCA Certified Ratings Seal for sound and air performance. Each fan shall bear a permanently affixed manufacturer's nameplate containing the model number and individual serial number for future identification. Refer to schedule for further requirement.

22) Louvers: 4" deep, 12 gauge (0.081) etched and 30–minute clear anodized extruded aluminum, drainable blades and frame; back mounted 1/2" mesh 19–gauge screen; flange frame. Louver shall be rated for no water carry–through at 900 face velocity, 0.15" maximum pressure drop for 4–foot square sample tested according to AMCA Standard 500, 1973.

23) SUBMITTALS AND SUBMITTAL PROCEDURES:
   a. Contractor shall review the submittal data and check for the purpose of compliance with safety requirements, verification of dimensions, contract documents and methods and means prior to submitting to design professional. Contractor shall indicate approval by indicating such on the submittal.
   b. Transmit each submittal electronically in PDF format.
   c. Sequentially number submittal files and transmittal form. Revise submittals with original number and a sequential alphabetic suffix. File names shall describe item included in file.
   d. Identify Project, the Contractor, Subcontractor or supplier; pertinent drawing and detail number, and specification section number, as appropriate on each copy. Each file shall include an index of items included in file.
   e. Apply the Contractor's stamp, signed or initialed certifying that review, approval, verification of Products required, field dimensions, adjacent construction Work, and coordination of information is in accordance with the requirements of the Work and Contract Documents.
   f. Submittal data for all items in project shall be submitted at one time. Submittal shall be divided into groups with file sizes not exceeding 6 MB. If there is unavailable data such as control submittal, etc., these may be submitted later if not doing so would delay project progress. Data shall include capacities, complete installation instructions, dimensional data and electrical data, BHP, motor HP, operating weights and load distribution at mounting points.
   g. Deliver submittals electronically to the Design Professional.
   h. Schedule submittals to expedite the Project, and coordinate submission of related items.
   i. For each submittal for review, allow 15 days excluding delivery time to and from the Contractor.
   j. Identify variations from Contract Documents and Product or system limitations that may be detrimental to successful performance of the completed Work.
   k. Provide space for the Contractor and the Architect/ review stamps.
   l. When revised for resubmission, identify all changes made since previous submission.
   m. Distribute copies of reviewed submittals as appropriate. Instruct parties to promptly report any inability to comply with requirements.
   n. Submittals not requested will not be recognized or processed.
   o. Provide files containing only related items (such as piping, equipment, air distribution, etc.)

24) Instruct Owner's representative in the operation of the systems, using the operation and maintenance manual as a teaching aid.

25) Provide an operation and maintenance manual. As a minimum, the manual shall contain:
   a. A complete list of all equipment and appurtenances with equipment designations (per Drawings), manufacturers, and catalog numbers.
   b. Copies of manufacturers' brochures and instructions for operation and maintenance of all mechanical equipment, including replacement parts lists.
   c. Typed system operation and maintenance instructions, including inspection, lubrication, and service instructions and schedules.
   d. List of names, addresses and phone numbers of distributors of all equipment and appurtenances.
   e. Manufacturers' warranties.

26) Indoor, direct–expansion, wall–mounted fan coil unit (ACU). Unit shall be complete with cooling/heating coil, fan, fan motor, piping connectors, electrical controls, microprocessor control system, and integral temperature sensing. Unit shall be furnished with integral wall mounting bracket and mounting hardware. Cabinet discharge and inlet grilles shall be attractively styled, high–impact polystyrene. Cabinet shall be fully insulated for improved thermal and acoustic performance. Fan shall be tangential direct–drive blower type with air intake at the top of the unit and discharge at the bottom front. Automatic, motor–driven vertical air sweep shall be provided standard. Air sweep operation shall be user selectable. The vertical sweep may be adjusted (using the remote control) and the horizontal air direction may be set manually. Coil shall be copper tube with aluminum fins and galvanized steel tube sheets. Fins shall be bonded to the tubes by mechanical expansion and golden hydrophilic pre–coated. A drip pan under the coil shall have a drain connection for hose attachment to remove condensate. Condensate pan shall have internal trap. Motors shall be open drip–proof, permanently lubricated ball bearing with inherent overload protection. Fan motors shall be 4–speed. Controls shall consist of a microprocessor–based control system which shall control space temperature, determine optimum fan speed, and run self–diagnostics. The temperature control range shall be from 62F to 86F (17C to 30C) in increments of 1F or 1C, and have 46F Heating Mode (Heating Setback). The wireless or wired remote controller shall have the ability to act as the temperature sensing location for room comfort. Refer to schedule for preference on wired or wireless thermostat. The unit shall have the following functions as a minimum: An automatic restart after power failure at the same operating conditions as at failure. A timer functions to provide a minimum 24–hour timer cycle for system Auto Start/Stop. Temperature–sensing controls shall sense return air temperature. Indoor coil freeze protection. Wireless infrared remote control and/or wired remote control as scheduled to enter set points and operating conditions. Automatic air sweep control to provide on or off activation of air sweep louvers. Dehumidification mode shall provide increased latent removal capability by modulating system operation and set point temperature. Fan–only operation to provide room air circulation when no cooling is required. Diagnostics shall provide continuous checks of unit operation and warn of possible malfunctions. Error messages shall be displayed at the unit. Fan speed control shall be user–selectable: high, medium, low, or microprocessor controlled automatic operation during all operating modes. Automatic heating–to–cooling changeover in heat pump mode. Control shall include deadband to prevent rapid mode cycling between heating and cooling. Indoor coil high temperature protection shall be provided to detect excessive indoor discharge temperature when unit is in heat pump mode. Unit shall have filter track with factory–supplied cleanable filters. Indoor fan motor to operate on 115V on model size 12 and on 208–230V on model sizes 09–36, as specified. Power is supplied from the outdoor unit. All units should have refrigerant lines that can be oriented to connect from the left, right or back of unit. Both refrigerant lines need to be insulated. The condensate pump shall remove condensate from the drain pan when gravity drainage cannot be used. Pump shall be designed for quiet operation. Pump shall consist of two parts: an internal reservoir/sensor assembly, and a remote sound–shielded pump assembly. A liquid level sensor in the reservoir shall stop cooling operation if the liquid level in the reservoir is unacceptable. Refer to schedule for providing condensate pump. Only provide condensate pump were indicated on schedule.

27) Small Split Condensing unit: Casing (HPU): House components in welded steel frame with galvanized steel panels with weather resistant, baked enamel finish. Mount contactors and controls in weatherproof panel provided with full opening access doors. Provide removable access doors or panels with quick fasteners. Compressor: Hermetically sealed, 3600 rpm maximum, resiliently mounted with positive lubrication and internal motor protection. Compressor: Hermetic reciprocating type or Hermetic scroll type. Condenser Coils: Aluminum fins mechanically bonded to seamless copper tubing or all aluminum fins and tube. Air test under water to 425 psig, and vacuum dehydrate. Seal with holding charge of refrigerant. Coil Guard: Louvered or PVC coat steel wire. Fans and motors: Direct driven propeller type condenser fans with fan guard on discharge. Weatherproof motors suitable for outdoor use, single phase permanent split capacitor with permanent lubricated ball bearings and built in thermal overload protection. Fan Guard: PVC coat steel wire. Refrigerant circuit: For each refrigerant circuit, provide: Filter dryer liquid line. Suction accumulator. Suction and liquid line service valves and gage ports. Charging valve. Condenser pressure relief mechanism. Factory wired with single point power connection. Factory wired controls shall include contactor, high– and low–pressure cutouts, internal winding thermostat for compressor, control circuit transformer, non–cycling reset relay. Provide a surge capacitor and lightning arrestor in unit cabinet for protection from power surges due to lightning and switching transients. Provide controls to permit operation down to 0 degrees F ambient temperature were scheduled to include: Crankcase heater with thermostat. Head pressure switch to cycle fan motors in response to refrigerant condensing pressure. Solid state control to vary speed of one condenser fan motor in response to refrigerant condensing pressure. Refer to Schedule on Drawings for additional specifications.

28) Corrosion Resistance Coating (ACU–1 & 2): Evaporator coil serving the fluoride and sodium hypochlorite chemical room shall be factory–coated or field–coated with a corrosion–resistant HVAC coil coating (Heresite P–413, Blygold PolurAl XT, or equal). Coil shall be cleaned, dried, and protected prior to coating. Apply two thin, even coats to all exposed coil surfaces, copper tubing, headers, and U–bends. Coating shall be compatible with chlorine and fluoride vapors and rated for severe chemical environments. Refrigerant piping associated with this system shall be fully coated for corrosion protection and installed within a concealed guard or protective enclosure to prevent chemical exposure and mechanical damage. Contractor shall protect all electrical components during coating and restore system operation after curing.

29) Basic motor requirements: basic requirements apply to mechanical equipment motors, unless otherwise indicated. Motors 1/2 hp and larger: Polyphase, unless otherwise scheduled. Motors smaller than 1/2 hp: single phase. Frequency rating: 60 Hz. Service factor: according to NEMA MG 1, general purpose continuous duty, design type "B." Enclosure: open drip–proof, unless otherwise indicated. Efficiency: motors shall have a higher efficiency rating than industry standard average motor as delineated in IEEE Standard 112, test method 13. Thermal protection: where indicated or required, internal protection automatically opens power supply circuit to motor when winding temperature exceeds a safe value calibrated to temperature rating of motor insulation. Thermal protection device automatically resets when motor temperature returns to normal range, unless otherwise indicated.

30) Hangers and supports: Building attachments: concrete inserts or structural–steel fasteners appropriate for building materials, and beam clamps. Hanger materials: galvanized, sheet steel or round, threaded steel rod. Hangers installed in corrosive atmospheres: electrogalvanized, all–thread rod or galvanized rods with threads painted after installation. Straps and rod sizes: comply with SMACNA's "HVAC Duct Construction Standards––Metal and Flexible" for sheet steel width and thickness and for steel rod diameters. Duct attachments: sheet metal screws, blind rivets, or self–tapping metal screws; compatible with duct materials. Trapeze and riser support galvanized steel shapes and plates: steel shapes complying with ASTM A 36/A 36M.

31) Sealant materials: joint and seam sealants, general: the term "sealant" is not limited to materials of adhesive or mastic nature but includes tapes and combinations of open–weave fabric strips and mastics. Joint and seam tape: 2 inches wide; glass–fiber fabric reinforced. Joint and seam sealant: one–part, nonsag, solvent–release–curing, polymerized butyl sealant, formulated with a minimum of 75 percent solids. Flanged joint mastics: one–part, acid–curing, silicone, elastomeric joint sealants, complying with ASTM C 920, type S, grade NS, class 25, use O.

32) All HVAC equipment such as AH, CU, EF, AC, HP, and RTU shall have visible nameplates with their associated marks on them.

33) Acceptable Manufacturers are:

Small Split Units:	Mitsubishi, Daikin, Hitachi, Toshiba
Grilles, Registers & Diffusers:	Titus, Nailor, Price, Tuttle & Bailey, Kruger, Metal Aire (Color selection submitted to Architect)
Fans:	Twin–City, Cook, Greenheck, Penn Barry, Acme, American Cool Air, Captive Air, Solar & Palau
Louvers/Dampers/Fire Dampers:	United Enertech, Greenheck, Ruskin, Arrow United, Lloyd Industries, Air Balance (Color selection submitted to Architect)
Controls–provided with unit:	Provide thermostats by same manufacturer as equipment

TOTAL ENGINEERS
169 New Street, Macon, GA 31201
(478)741-4632 - T.E. project # 25-101
www.totalengineers.com
GA COA NO # PEF009195 EXP: 06/30/2026

ESG ENGINEERING

GROUNDWATER WELLS #4 & #5
FOR THE
CITY OF FLOWERY BRANCH

REVISIONS

NO.	DESCRIPTION	DATE
2	ADDENDUM 2	

CONFORMED SET

GEORGIA REGISTERED PROFESSIONAL ENGINEER
No. PE009664
KRUNAL M PATEL

DRAWN BY: KMP
CHECKED BY: KMP
DATE:
SCALE:

CONTENT:

MECHANICAL SPECIFICATIONS

SHEET NO:

M0.1

Last Saved By: Owner Plotted: 12/11/2025 10:58 AM
Drawing Path: Z:\2025\101 Well Project Chem Feed Building Flowery Branch_GA\DRAWINGS\TE25-101 HVAC.dwg

FAN SCHEDULE

MARK	CFM	EXT. SP IN W.G.	DRIVE TYPE	MOTOR HP/W	MAX. FAN (RPM)	MAX TIP SPEED FPM	POWER/ PHASE	LAY-OUT BASIS: GREENHECK	NOTES
EF-1	350	0.20	DIRECT	1/10 HP	1425	4055	115/1	CUE-080-VG	1; 2; 3; 4; 5
EF-2	350	0.20	DIRECT	1/10 HP	1425	4055	115/1	CUE-080-VG	1; 2; 3; 4; 5
EF-3	600	0.20	DIRECT	1/10 HP	1590	4525	115/1	CUE-090-VG	1; 2; 3; 4; 5

1. VERIFY ELECTRIC POWER REQUIREMENTS WITH ELECTRICAL PLANS, WHICH TAKE PRECEDENCE OVER THIS INFORMATION. BOTTOM OF FAN AT 8' AFF. COORDINATE EXACT ELEVATION WITH ARCHITECT.
2. CENTRIFUGAL WALL MOUNT FAN. PROVIDE WALL MOUNTING BRACKET, GRAVITY SHUTTER WITH BUG SCREEN, EC MOTOR, AND SPEED CONTROLLER. ALL PARTS SHALL BE INTERNALLY AND EXTERNALLY COATED(INCLUDING WHEEL AND ALL SURFACES IN AIR STREAM)
3. PROVIDE ALL INTERNALLY AND EXTERNALLY COATED(INCLUDING WHEEL AND ALL SURFACES IN AIR STREAM) SUITABLE FOR SEVERELY CORROSIVE ATMOSPHERES(POTASSIUM PERMANGANATE & SODA ASH). COATING SHALL BE FACTORY APPLIED HI-PRO POLYESTER COATING.
4. POLYSTER COATING SHALL BE GREENHECK HI-PRO POLYSTER OR EQUAL. PROVIDE MANUFACTURER'S WALL GRILL.
5. FAN SHALL BE CONTROLLED BY WALL SWITCH TO ENERGIZE THE FAN PRIOR TO ENTERING ROOM. WALL SWITCH SHALL BE PROVIDED BY ELECTRICAL.

LOUVER SCHEDULE

MARK	SIZE W X H (INCHES)	MIN. FREE AREA (SQ. FT.)	MAXIMUM PRESS. DROP (IN. W.G.)	FINISH (COLOR BY ARCHITECT)	MOTOR OPERATOR	INTERLOCK TO OPEN WITH	LAY-OUT BASIS: GREENHECK	NOTES
L-1	18"X18"	0.73	0.08	ENAMEL	YES	EF-1	GREENHECK ECD-401	1; 2
L-2	18"X18"	0.73	0.08	ENAMEL	YES	EF-2	GREENHECK ECD-401	1; 3
L-3	24"X18"	1.02	0.08	ENAMEL	YES	EF-3	GREENHECK ECD-401	1; 3

1. STATIONARY EXTRUDED ALUMINUM LOUVER. PROVIDE CORROSION RESISTANCE KYNER FINISH. PROVIDE BIRD AND INSECT SCREEN. COORDINATE COLOR WITH ARCHITECT (PROVIDE COLOR SAMPLES WITH SUBMITTAL).
2. BOTTOM OF LOUVER AT 24-INCHES AFF.

MINI SPLIT & COOLING ONLY FAN COIL SYSTEM SCHEDULE

OUTDOOR UNIT MARK	INDOOR UNIT MARK	MIN COOLING MBH	MIN HEATING MBH	SUPPLY AIR CFM HI-LO	POWER VAC/PH	CARRIER MODEL #		NOTES
						OUTDOOR	INDOOR	
HPU-1	ACU-1	18.0	18.0	380-840	208/1	37MARAQ18AA3	45MAHAQ18XA3	1; 2; 3; 4; 5; 6; 7; 8
HPU-2	ACU-2	18.0	18.0	380-840	208/1	37MARAQ18AA3	45MAHAQ18XA3	1; 2; 3; 4; 5; 6; 7; 8
HPU-3	ACU-3	36.0	36.0	380-840	208/1	37MARAQ36AA3	45MAHAQ36XA3	1; 2; 3; 4; 5; 6; 7

1. VERIFY ELECTRICAL POWER REQUIREMENTS WITH ELECTRICAL PLANS WHICH TAKES PRECEDENCE OVER THIS INFORMATION.
2. MINI SPLIT SYSTEM MOUNTED ON WALL (SEE PLANS). PROVIDE MANUFACTURER'S WIERED THERMOSTAT
3. ROUTE CONDENSATE TO OUTSIDE. REFER TO DRAWING FOR FURTHER INFORMATION. PROVIDE RECTOR SEAL COIL MOUNTED(CLIPPED TO COIL) SATE-T-SWITCH SS610E.
4. WIRE SWITCH TO SHUT UNIT DOWN IN CASE OF CONDENSATE OVERFLOW. PROVIDE SELF CLEANING IONIZATION SYSTEM FOR UNIT. REFER TO SCHEDULE FOR FURTHER INFORMATION.
5. PROVIDE DISCONNECT AND ELECTRICAL CONNTECTION TO OUTDOOR UNIT PER MANUFACTURER'S INSTRUCTIONS.
6. COOLING RANGE SHALL BE BETWEEN -22 F TO 122F. HEATING RANGE SHALL BE -22F TO 86F.
7. PROVIDE CONDENSATE PUMP LOCATED WITHIN ACU CABINET TO PUMP CONDENSATE TO DRAIN OUTSIDE WHERE REQUIRED. OMIT PUMP WHERE GRAVITY DRAIN IS POSSIBLE.
8. PROVIDE CORROSION RESISTANCE COATING FOR THE UNIT AND ITS ACCESSORIES. REFER TO SPECIFICATIONS FOR FURTHER INFORMATION.

SELF-CLEANING IONIZATION SYSTEM SCHEDULE

AIRFLOW CAPACITY MIN-MAX CFM	BASIS OF DESIGN GLOBAL PLASMA SOLUTIONS	NOTES
0-1200	GPS-FC	1; 2; 3; 4; 5

1. ONE SELF CLEANING IONIZATION SYSTEM SHALL BE INSTALLED PER SYSTEM.
2. ONE SELF CLEANING IONIZATION SYSTEM SHALL BE INSTALLED PER DUCTLESS MINI SPLIT UNIT.
3. SYSTEM SHALL BE USE FOR DUCTLESS MINI SPLITS.
4. SYSTEM SHALL BE EQUIPPED WITH CARBON FIBER BRUSHES AND LED OPERATION STATUS.
5. INTERLOCK IONIZATION SYSTEM TO RUN WITH EVAPORATOR FAN.

MECHANICAL SYMBOLS & ABBREVIATIONS LEGEND

	NEW PIPE, DUCTWORK OR EQUIPMENT
24x12 24x12	DUCT SIZE: FIRST DIMENSION IS SIDE DRAWN
	FLEXIBLE ROUND DUCTWORK
F SCD SD	FIRE DAMPER, SMOKE DAMPER, SMOKE DETECTOR
	CEILING SUPPLY DIFFUSER
	CEILING RETURN OR EXHAUST AIR
	S.A DUCT OUT OF TU BOX WITH DUCT LINER FOR THR FIRST FIVE FEET OF DUCT OUT OF TU BOX
	SIDEWALL REGISTER OR GRILLE
	CHANGE IN PIPE OR DUCT SIZE OR SHAPE
R	REFRIGERANT PIPING
D	CONDENSATE OR OTHER DRAIN PIPING
	ELBOW TURNED DOWN OR TURNED UP IN PIPING
T	THERMOSTAT, ARROW SHOWS CONTROL WIRING PATH
TC	TIME CLOCK
ø	DIAMETER
U.C.	UNDER-CUT DOOR 3/4", UNLESS OTHER SIZE NOTED
701 E1A	INDICATES EQUIPMENT ON PLANS; TOP ITEM SHOWS TYPE OF EQUIPMENT AND BOTTOM ITEM SHOWS SPECIFIC MARK NUMBER
4 S1 8"ø 300	ITEM IN HEXAGON SHOWS AIR DEVICE MARK NUMBER, ITEM ABOVE LINE SHOWS NECK SIZE, ITEM BELOW LINE SHOWS AIR FLOW THROUGH DEVICE, AND NUMBER IN FRONT SHOWS QUANTITY IF MORE THAN ONE
AFF	ABOVE FINISHED FLOOR
AH	AIR HANDLING UNIT
BTUH, MBH	BRITISH THERMAL UNITS, THOUSAND BRITISH THERMAL UNITS
CAP	CAPACITY
CFM	CUBIC FEET PER MINUTE
CLG	CEILING
CU	CONDENSING UNIT
DB, WB	DRY BULB TEMPERATURE, WET BULB TEMPERATURE
EA, EG	EXHAUST AIR, EXHAUST GRILLE
EF	EXHAUST FAN
EXT SP	EXTERNAL STATIC PRESSURE (USUALLY EXPRESSED IN INCHES OF WATER IN GAGE)
HP	HEAT PUMP UNIT
MVD, VD	MANUAL VOLUME DAMPER
OA	OUTSIDE AIR
RA, RG	RETURN AIR, RETURN GRILLE
SA	SUPPLY AIR
VAC, PH	VOLTS ALTERNATING CURRENT, NUMBER OF PHASES
W, KW	WATTS, KILOWATTS
UH	UNIT HEATER

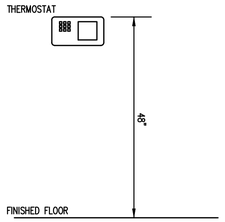

1 T-STAT DETAIL
SCALE: N.T.S.

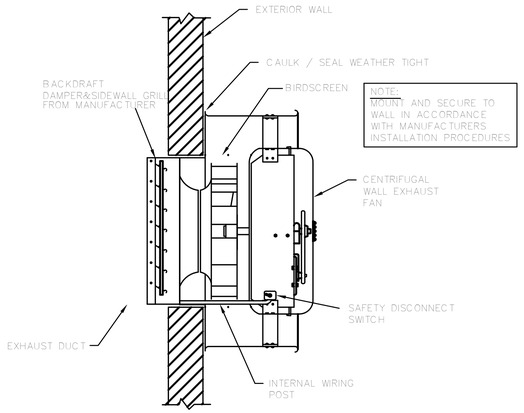

2 SIDEWALL CENTRIFUGAL EXHAUST FAN MOUNTING-DETAIL
SCALE: NTS

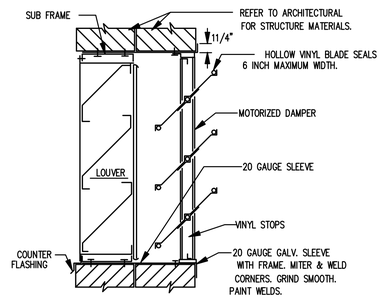

3 WALL MOUNTED LOUVER WITH DAMPER IN MASONRY WALL
SCALE: N.T.S.

TOTAL ENGINEERS
169 New Street, Macon, GA 31201
(478)741-4632 - T.E. project # 25-101
www.totalengineers.com
GA COA NO # PEF009195 EXP: 06/30/2026

ESG ENGINEERING

GROUNDWATER WELLS #4 & #5
FOR THE
CITY OF FLOWERY BRANCH

REVISIONS

NO.	DESCRIPTION	DATE
2	ADDENDUM 2	

CONFORMED SET

GEORGIA REGISTERED PROFESSIONAL ENGINEER KRUNAL M PATEL

DRAWN BY: KMP
CHECKED BY: KMP
DATE:
SCALE:

CONTENT:
MECHANICAL SCHEDULES

SHEET NO:
M0.2

Last Saved By: Owner Plotted: 12/11/2025 10:58 AM
Drawing Path: Z:\2025\101 Well Project Chem Feed Building Flowery Branch, GA\DRAWINGS\TE\25-101 HVAC.dwg

KEY NOTES(THIS SHEET ONLY):

1. ROUTE CONDENSATE DRAIN TO OUTSIDE 12-INCHES AFF. PROVIDE 45-DEGREE ELBOW AT END OF PIPE TO GUIDE CONDENSATE AWAY FROM EXTERIOR WALL. PROVIDE SPLASH BLOCK AT DISCHARGE.
2. ROUTE CONDENSATE TO MOP SINK.
3. LOUVER SHALL BE 4-INCH DEEP AT MAXIMUM.

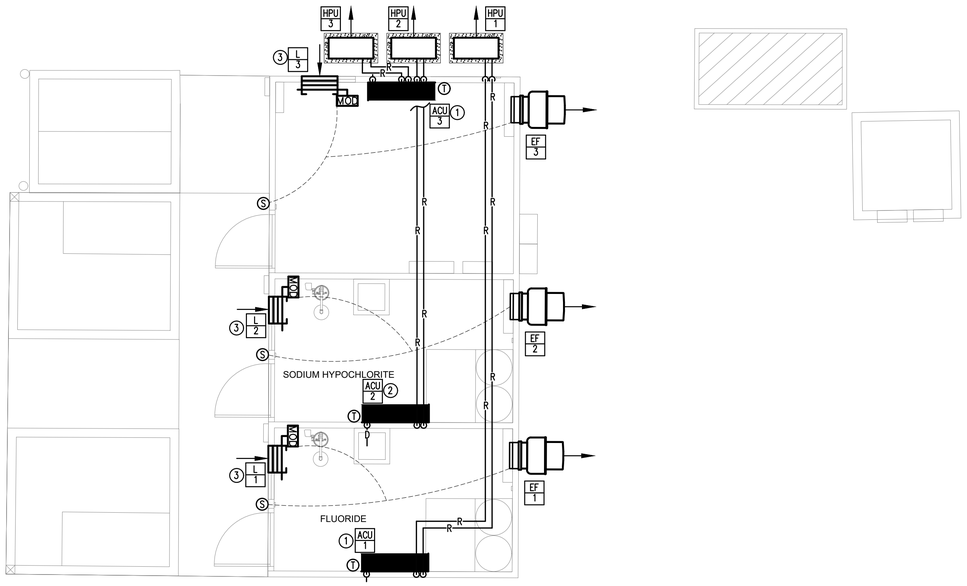

1 MECHANICAL PLAN
SCALE: 1/4"=1'-0"

ESG ENGINEERING

GROUNDWATER WELLS #4 & #5

FOR THE

CITY OF FLOWERY BRANCH

REVISIONS

NO.	DESCRIPTION	DATE
2	ADDENDUM 2	

CONFORMED SET

GEORGIA REGISTERED PROFESSIONAL ENGINEER KRUNAL M PATEL

DRAWN BY: KMP
CHECKED BY: KMP
DATE:
SCALE:

CONTENT:

MECHANICAL PLAN

SHEET NO:

M1.0

TOTAL ENGINEERS
169 New Street, Macon, GA 31201
(478)741-4632 - T.E. project # 25-101
www.totalengineers.com
GA COA NO # PEF009195 EXP: 06/30/2026

Last Saved By: Owner
Drawing Path: Z:\2025\101 Well Project Chem Feed Building Flowery Branch, GA\DRAWINGS\TE\25-101 HVAC.dwg
Plotted: 12/11/2025 10:58 AM

LEGEND

	LIGHTING AND POWER
	CONDUIT RUN CONCEALED ABOVE CEILING OR IN WALL CONTAINING 3 NUMBER 12 CONDUCTORS UNLESS SHOWN OTHERWISE. HASH MARKS, IF SHOWN, INDICATE QUANTITY OF NUMBER 12 CONDUCTORS. WHERE DRAWING SPACE PROHIBITS HASH MARKS BEING SHOWN REFER TO CIRCUIT NUMBERS AND PROVIDE REQUIRED NUMBER OF CONDUCTORS PER CIRCUIT TYPE.
	CONDUIT RUN CONCEALED IN OR BELOW FLOOR SLAB, OR UNDERGROUND.
A-2,4,6	HOMERUN TO PANELBOARD, LETTER OR LETTERS INDICATE PANELBOARDS, NUMBERS INDICATE CIRCUIT NUMBERS.
	L.E.D. FIXTURE, SURFACE OR STEM MOUNTED.
	L.E.D. LIGHTING FIXTURE, SURFACE WALL BRACKET MOUNTED. MOUNTING HEIGHT AS NOTED.
J	JUNCTION BOX LOCATED ABOVE CEILING OR BELOW GRADE.
	DUPLEX CONVENIENCE OUTLET MOUNTED ABOVE COUNTER, AT +48" TO CENTERLINE OF OUTLET.
	DUPLEX CONVENIENCE OUTLET, GFI TYPE. +18" TO CENTER LINE UNLESS OTHERWISE NOTED. "WP" WHERE SHOWN INDICATES WEATHER-RESISTENT DEVICE WITH METAL IN-USE WEATHERPROOF COVER.
	DUPLEX CONVENIENCE OUTLET, GFI TYPE. MOUNTED ABOVE COUNTER AT +46" TO CENTERLINE OF RECEPTACLE UNLESS NOTED OTHERWISE, "WP" WHERE SHOWN INDICATES WEATHER-RESISTENT DEVICE WITH METAL IN-USE WEATHERPROOF COVER.
	SINGLE POLE TOGGLE SWITCH, +46" TO CENTER LINE MOUNTING HEIGHT.
	PANELBOARD, SEE SCHEDULE.
	DISCONNECT SWITCH, SIZE AS NOTED ON DRAWINGS. FUSED PER MANUFACTURER'S NAME PLATE DATA OF EQUIPMENT SERVED.
GA	GENERATOR REMOTE ANNUNCIATOR. FLUSH RECESSED MOUNTED.

GENERAL NOTES:

1. DO NOT SCALE DRAWINGS TO LOCATE EQUIPMENT OR OUTLETS.
2. MOUNTING HEIGHTS AS INDICATED ON THE DRAWINGS SHALL BE FROM THE FINISHED FLOOR TO THE CENTER LINE OF THE OUTLET BOX.
3. THE ELECTRICAL DRAWINGS ARE ONLY A PART OF THE CONTRACT DOCUMENTS. ALL OF THE DRAWINGS AND SPECIFICATIONS MUST BE REVIEWED FOR THEIR INTERRELATIONSHIP AND REQUIRED COORDINATION BETWEEN DISCIPLINES.
4. ALL CONDUIT ROUTED FROM DISCONNECT TO EXTERIOR HVAC UNITS SHALL BE ROUTED UNDERGROUND. TURN UP ADJACENT TO UNIT AND MAKE TRANSITION TO SEALTITE TO SERVE UNIT. CONDUIT SHALL BE. ROUTED CONCEALED IN WALL.
5. ALL FLUSH RECESSED OUTLET BOXES SHALL BE INSTALLED SUCH THAT FRONT EDGE OF BOX WILL NOT BE SET BACK OF THE FINISHED SURFACE MORE THAN 1/4" IN ORDER TO COMPLY WITH N.E.C. 314-20. SUPPORT OF OUTLET BOX BY RECEPTACLE AND COVERPLATE IS NOT ACCEPTABLE.
6. ALL CONDUIT, OUTLET BOXES, AND LOW VOLTAGE CABLING SHALL BE APPROPRIATELY SUPPORTED THROUGHOUT THE PROJECT. SUPPORT OF THESE ITEMS BY CEILING GRID OR GRID SUPPORT WIRES IS NOT ACCEPTABLE.
7. ALL RECEPTACLES LOCATED WITHIN 6'-0"TO THE EDGE SINK OR OTHER WATER SOURCE SHALL BE GFCI TYPE DEVICE IN ACCORDANCE WITH N.E.C 210-8.A.7. COORDINATE LOCATIONS WITH ARCHITECTURAL AND PLUMBING DRAWINGS PRIOR TO ROUGH-IN.
8. COORDINATE EXACT LOCATION OF ALL MECHANICAL AND PLUMBING EQUIPMENT WITH DIVISION 23 PRIOR TO ROUGH IN. ADJUST LOCATION OF DISCONNECTING MEANS AND BRANCH CIRCUITRY AS REQUIRED.
9. ALL UNISTRUT MATERIAL SHALL BE MADE OF GRADE 304 OR 316 STAINLESS STEEL.
10. ALL FASTENERS USED IN THE CONSTRUCTION OF CHEMICAL FEED SYSTEM SHALL BE 304 OR 316 STAINLESS STEEL (INSTALLED WITH ANTI-GALLING COMPOUND ON FASTENERS 5/6 OR 8MM AND LARGER).
11. ALL FIELD DEVICES WITH A VISIBLE DISPLAY SHALL BE MOUNTED IN A NEMA 4X LOCKABLE ENCLOSURE.
12. ALL FIELD ENCLOSURES AND JUNCTION BOXES SHALL BE SEALED WITH GROMMET TYPE REUSABLE SEALS.
13. ALL EXTERIOR JUNCTION BOXES SHALL BE NEMA 4X RATED.
14. ALL EXTERIOR ELECTRICAL PANELBOARDS, TRANSFORMERS, DISCONNECTS, RECEPTACLES, AND SWITCHES SHALL BE NEMA 4X RATED.
15. CONTRACTOR SHALL PROVIDE CONDUIT AND BACKBOXES FOR ALL DEVICES AND WIRING. COORDINATE ALL CONTROL CABLING CONNECTIONS AND REQUIREMENTS WITH CONTROLS INSTALLER PRIOR TO ROUGH IN.
16. ALL EXPOSED EXTERIOR CONDUIT, RACEWAYS, AND SUPPORTS MEMBERS SHALL BE ALUMINUM.
17. COORDINATE EXACT LOCATION OF ALL DEVICES THAT REQUIRE CONTROL CABLING WITH MANUFACTURER PRIOR TO INSTALLATION.
18. ENSURE CONDUIT CONNECTIONS TO JUNCTION BOXES ARE MADE IN SUCH A WAY AS TO MAINTAIN THE 4X RATING OF THE JUNCTION BOX.
19. CONTRACTOR SHALL REFER TO DETAIL SHEETS FOR ALL MOUNTING REQUIREMENTS FOR ALL DEVICES AND EQUIPMENT. ALL EQUIPMENT LOCATED OUTDOORS SHALL BE PROVIDED WITH STAINLESS STEEL RACK AND ALL OTHER REQUIRED MOUNTING HARDWARE AS OUTLINED IN DETAILS AS REQUIRED FOR MOUNTING OF EQUIPMENT AND DEVICES.

LIGHTING FIXTURE SCHEDULE

TYPE	DESCRIPTION	WATTS	LUMENS	COLOR TEMP	MANUFACTURERS	NOTES
A	LED 4' STRIP LIGHT FIXTURE SURFACE MOUNTED WITH RIBBED FROSTED ACRYLIC ENCLOSED AND GASKETED LENS, NEMA 4X HOUSING AND WHITE FINISH.	34 W	3900	4000 K	COLUMBIA "LXEM" SERIES OR EQUAL	
B	L.E.D. WALL MOUNTED FIXTURE, DIE-CAST WALL PACK, GLASS REFRACTOR. TYPE III DISTRIBUTION.	30 W	4370	4000 K	HUBBELL"WGH2" SERIES OR EQUAL	
C	LED SURFACED MOUNTED FLOOD LIGHT WITH TWO DIE-CAST ALUMINUM HEADS, TEMPER GLASS LENSES, AND WHITE FINISH.	27 W	2100	4000 K	HUBBELL "MARSHAL" SERIES OR EQUAL	

GENERAL NOTES:

A. ALL LUMENS LISTED ARE DELIVERED LUMENS. ALL EQUALS TO SPECIFIED SHALL NOT BE ANY LOWER THAN 5% OF SPECIFIED LUMENS NOR WATTAGE BE HIGHER THAN 15% OF SPECIFIED WATTAGE.

B. LISTING OF MANUFACTURERS DOES NOT EQUAL AUTOMATIC APPROVAL. ALL CHARACTERISTICS NOTED IN DESCRIPTION SECTION MUST BE MET IN ORDER TO BE APPROVED. WHERE VENDOR / REP DOES NOT HAVE ONE OF MANUFACTURERS LISTED, PRIOR APPROVAL IS REQUIRED TO BE SUBMITTED TO ENGINEER TEN (10) DAYS PRIOR TO BID.

C. ALL FIXTURE VOLTAGES SHALL BE MULTIVOLT TYPE UNLESS OTHERWISE NOTED.

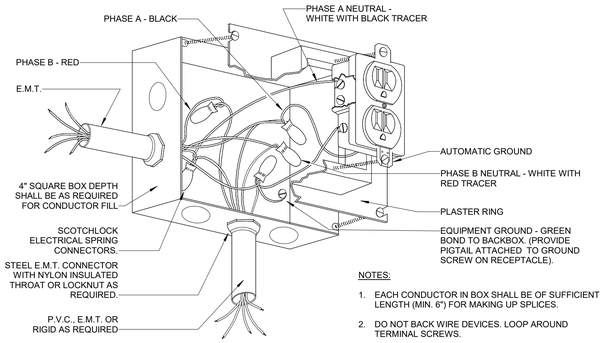

NOTES:

1. EACH CONDUCTOR IN BOX SHALL BE OF SUFFICIENT LENGTH (MIN. 6") FOR MAKING UP SPLICES.
2. DO NOT BACK WIRE DEVICES. LOOP AROUND TERMINAL SCREWS.
3. FACE OF PLASTER RING SHALL BE FLUSH WITH WALL.

1 / E1.0 DETAIL - RECEPTACLE CONNECTION
NO SCALE

PANELBOARD: MDP

LOCATION: **VOLTAGE:** 480Y/277 V. 3 ø 4 W.
MOUNTING: SURFACE NEMA 1 **A.I.C. RATING:** 42,000 AMPS SYMMETRICAL
MAIN DEVICE: 225.0 A MAIN CB **SPECIAL:**
BUS AMPS: 225 AMPS **FED FROM:** ATS-MDP

LOAD NAME	NOTE	BKR	P	CKT	A	B	C	CKT	P	BKR	NOTE	LOAD NAME
SPARE		20 A	1	1	0.0 0.5			2	1	20 A		LIGHTING
SPARE		20 A	1	3	0.0 0.0			4	1	20 A		SPARE
SPARE		20 A	1	5	0.0 0.0			6	1	20 A		SPARE
SPARE		20 A	1	7	0.0 0.0			8	1	20 A		SPARE
SPARE		20 A	1	9	0.0 0.0			10	1	20 A		SPARE
SPARE		20 A	1	11	0.0 0.0			12	1	20 A		SPARE
TRANSFORMER T-LA		30 A	3	13	5.4 0.0			14				
				15	6.1 0.0			16	3	50 A		SPARE
				17	6.2 0.0			18				
WW CONTROL PANEL		30 A	3	19	3.0 9.5			20				
				21	3.0 9.5			22	3	50 A		HW CONTROL PANEL
				23	3.0 9.5			24				
IWH-1		125 A	3	25	22.5 0.0			26				
				27	22.5 0.0			28	3	40 A		SPD
				29	22.5 0.0			30				
		TOTAL LOAD:			40 kVA	40 kVA	40 kVA					
		TOTAL AMPS:			144 A	145.9 A	146 A					

LOAD CLASSIFICATION	CONNECTED	DEMAND	ESTIMATED	PANEL TOTALS	
HVAC	41779 VA	100.00%	41779 VA		
RECEPTACLES	4320 VA	100.00%	4320 VA	CONNECTED LOAD:	120750 VA
MTR	77174 VA	121.96%	94118 VA	ESTIMATED DEMAND:	137575 VA
LITES	474 VA	125.00%	592 VA	CONNECTED CURRENT:	145.2 A
				EST. DEMAND CURRENT:	165.5 A

NOTES:

PANELBOARD: LA

LOCATION: **VOLTAGE:** 208Y/120 V. 3 ø 4 W.
MOUNTING: SURFACE NEMA 1 **A.I.C. RATING:** 10,000 AMPS SYMMETRICAL
MAIN DEVICE: 100.0 A MAIN CB **SPECIAL:**
BUS AMPS: 100 AMPS **FED FROM:** T-LA

LOAD NAME	NOTE	BKR	P	CKT	A	B	C	CKT	P	BKR	NOTE	LOAD NAME
SCADA PANEL		20 A	1	1	0.0 1.7			2				
RECEPTACLES		20 A	1	3		0.5 1.7		4	2	25 A		HPU/ACU-1
SH-(1-4)		20 A	1	5			0.8 1.7	6				
EF-(1-3)		15 A	1	7	0.5 1.7			8	2	25 A		HPU/ACU-2
FL-(1-4)		20 A	1	9		0.8 3.0		10				
RECEPTACLES		20 A	1	11			0.4 3.0	12	2	40 A		HPU/ACU-3
RECEPTACLES		20 A	1	13	0.4 0.1			14				
BATTERY CHARGER		20 A	1	15		0.0 0.1		16	2	30 A		DATA RECEPTACLE
BLOCK HEATER		30 A	1	17			0.0 0.4	18	1	20 A		CF-CP
SPARE		20 A	1	19	0.0 0.0			20	1	20 A		SPARE
SPARE		20 A	2	21		0.0 0.0		22	1	20 A		SPARE
				23			0.0 0.0	24	1	20 A		SPARE
SPARE		30 A	3	25	0.0 0.0			26				
				27		0.0 0.0		28	3	40 A		SPD
				29			0.0 0.0	30				
		TOTAL LOAD:			4 kVA	6 kVA	6 kVA					
		TOTAL AMPS:			37 A	52.9 A	54 A					

LOAD CLASSIFICATION	CONNECTED	DEMAND	ESTIMATED	PANEL TOTALS	
HVAC	13179 VA	100.00%	13179 VA		
RECEPTACLES	3240 VA	100.00%	3240 VA	CONNECTED LOAD:	16659 VA
MTR	504 VA	108.33%	546 VA	ESTIMATED DEMAND:	16701 VA
				CONNECTED CURRENT:	46.2 A
				EST. DEMAND CURRENT:	46.4 A

NOTES:

ESG ENGINEERING
6400 Peake Rd
Macon, GA 31210
Ph: (478) 474-4600
Fax: (478) 474-5045

GROUNDWATER WELLS #4 & #5
FOR THE
CITY OF FLOWERY BRANCH

REVISIONS

NO.	DESCRIPTION	DATE
3	REV 3	12-10-25

CONFORMED SET

GEORGIA REGISTERED NO. 038816 PROFESSIONAL ENGINEER BRIAN W. NEWLAND

DRAWN BY: CT
CHECKED BY: BN
DATE: OCT 2025
SCALE: AS SHOWN

CONTENT:
LEGEND, NOTES, DETAILS, AND FIXTURE SCHEDULE

SHEET NO:
E1.0

EDC ELECTRICAL DESIGN CONSULTANTS
ELECTRICAL ENGINEERS
AUGUSTA OFFICE - PROJECT #: 25173
edc1973.com

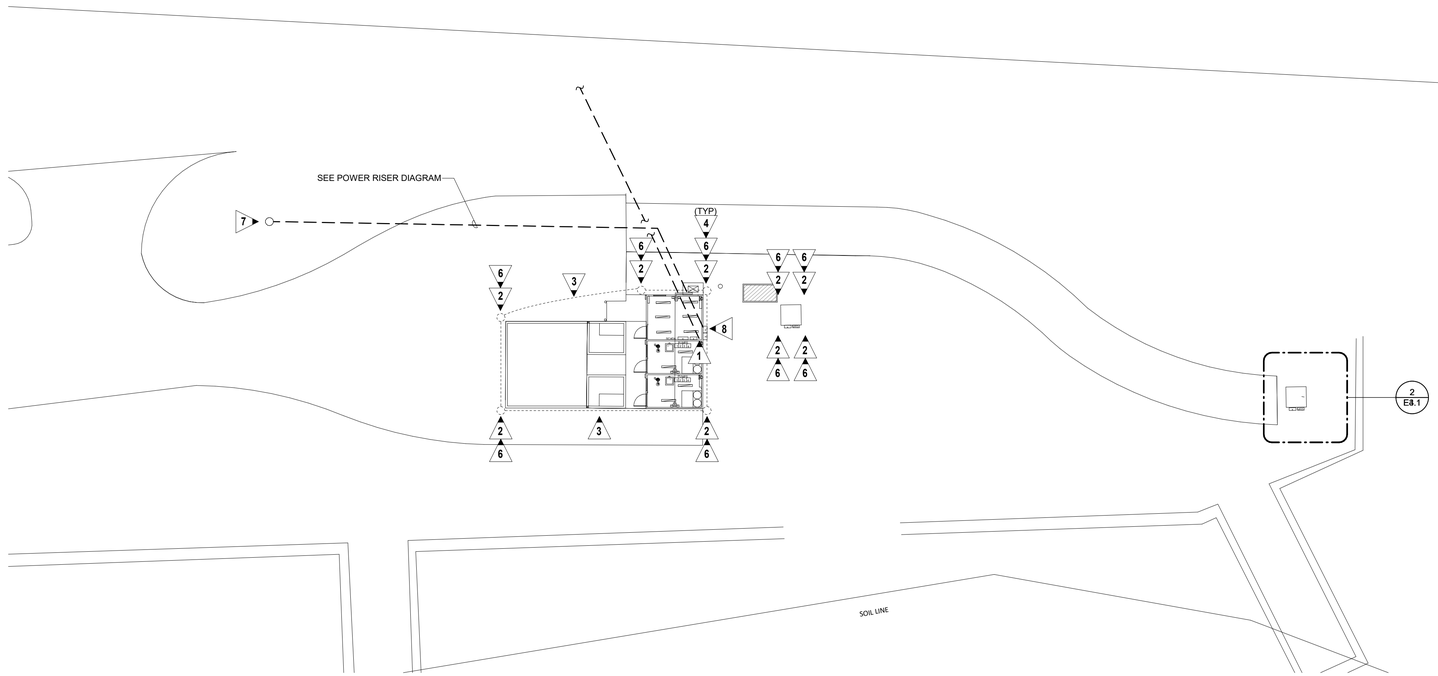

1 E1.1 ELECTRICAL SITE PLAN
SCALE: 1/16" = 1'-0"

GENERAL NOTES:

1. DIVISION 26 TO COORDINATE EXACT LOCATION OF UTILITY TRANSFORMER WITH POWER COMPANY PRIOR TO BID. DIVISION 26 SHALL COORDINATE EXACT ROUTING OF UNDERGROUND PRIMARY CONDUCTORS WITH POWER COMPANY PRIOR TO BID. NO ADDITIONAL COST SHALL BE INCURRED BY THE OWNER DUE TO THE LACK OF COORDINATION BY THE CONTRACTOR.
2. PROVIDE MARKING TAPE OVER ALL CONDUITS OUTSIDE OF BUILDING FOOTPRINT.
3. SURVEY AND SITE INFORMATION PROVIDED BY OTHERS. VERIFY ALL CONDITIONS ON SITE AND WITH OFFICIAL SURVEYS AND OTHERS TRADE.
4. CALL UNDERGROUND UTILITY CENTER AND VERIFY ALL UNDERGROUND UTILITIES.
5. UNDERGROUND CONDUIT SHALL BE SCHEDULE 40 PVC, UNLESS NOTED OTHERWISE.
6. CONTRACTOR SHALL STAKE-OFF ALL EXISTING UTILITIES PRIOR TO ROUGH-IN. ALL NEW INSTALLATION SHALL BE COORDINATION WITH EXISTING UTILITY LOCATIONS.
7. PROVIDE HANDHOLES AS REQUIRED BY NEC.

KEYED NOTES:

1. STUB OUT (2) 2" EMPTY CONDUITS WITH PULL STRINGS FOR FIBER. COORDINATE EXACT LOCATION AND REQUIREMENTS WITH TELCO COMPANY.
2. PROVIDE GROUND ROD AT LOCATION SHOWN. CONNECT GROUND ROD TO BUILDING STEEL AT CORNER. NUMBER AS REQUIRED FOR TOTAL RESISTANCE OF 25 OHMS. GROUND RODS SHALL BE 3/4" X 10'-0" COPPER CLAD STEEL. CONNECTION TO ALL GROUND RODS SHALL BE BY EXOTHERMIC WELD.
3. PROVIDE GROUND RING 30" BELOW GRADE WITH WARNING TAPE LOCATE 12" BELOW GRADE. CONSTRUCT GROUND RING WITH 1/0 AWG BARE COPPER WIRE.
4. MAKE GROUNDING CONNECTION WITH 1/0 AWG COPPER WIRE TO EQUIPMENT AS SHOWN. TYPICAL FOR ALL GROUNDING CONNECTIONS SHOWN.
5. COORDINATE EXACT GROUND RING BURIAL PATHING WITH CIVIL.
6. PROVIDE GROUND ROD ENCLOSURE WITH REMOVABLE CAP.
7. APPROXIMATE LOCATION OF GEORGIA POWER POLE MOUNTED TRANSFORMER. COORDINATE EXACT LOCATION WITH CIVIL PLANS.
8. APPROXIMATE LOCATION OF ELECTRICAL SERVICE DISCONNECT. SEE SHEET E3.1 FOR EXACT LOCATION AND SHEET E5.1 FOR CONDUIT AND CONDUCTOR REQUIREMENTS. COORDINATE EXACT ROUTING WITH CIVIL PLANS PRIOR TO ROUGH IN.

ESG ENGINEERING
6400 Peake Rd
Macon, GA 31210
Ph: (478) 474-4496
Fax: (478) 474-5045

GROUNDWATER WELLS #4 & #5

FOR THE
CITY OF FLOWERY BRANCH

REVISIONS

NO.	DESCRIPTION	DATE
3	REV 3	12-10-25

CONFORMED SET

GEORGIA REGISTERED NO. 038816 PROFESSIONAL ENGINEER BRIAN W. NEWLAND

DRAWN BY: CT
CHECKED BY: BN
DATE: OCT 2025
SCALE: AS SHOWN

CONTENT:
ELECTRICAL SITE PLAN

SHEET NO:
E1.1

EDC ELECTRICAL DESIGN CONSULTANTS
ELECTRICAL ENGINEERS
AUGUSTA OFFICE - PROJECT #: 25173
edc1973.com

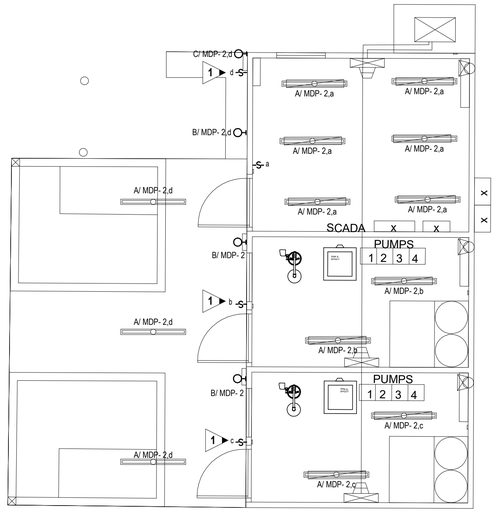

1 / E2.1 LIGHTING PLAN
SCALE: 1/4" = 1'-0"

GENERAL NOTES:

1. ALL EQUIPMENT/RACEWAYS SHALL BE SUITABLE FOR THE ENVIRONMENT IN WHICH IT IS INSTALLED.

KEYED NOTES:

1 ▶ PROVIDE DIE-CAST WEATHERPROOF JUNCTION BOX WITH LIGHT SWITCH AND WEATHERPROOF COVER TO CONTROL DESIGNATED LIGHT FIXTURE.

LIGHT FIXTURE DESIGNATION DESCRIPTION

EXAMPLE: B/HA1-1,b

- PANEL DESIGNATION: B/
- FIXTURE TYPE: TYPE "A" IF NO CAPITAL LETTER SHOWN: HA1
- CIRCUIT NUMBER: -1,
- SWITCH LEG DESIGNATION WHEN MULTIPLE SWITCHES ARE IN SAME SPARE/AREA: b

ESG ENGINEERING
6400 Peake Rd
Macon, GA 31210
Ph: (478) 474-4995
Fax: (478) 474-5045

GROUNDWATER WELLS #4 & #5

FOR THE
CITY OF FLOWERY BRANCH

REVISIONS

NO.	DESCRIPTION	DATE
3	REV 3	12-10-25

CONFORMED SET

GEORGIA REGISTERED NO. 038816 PROFESSIONAL ENGINEER BRYAN W. NEWLAND

DRAWN BY: CT
CHECKED BY: BN
DATE: OCT 2025
SCALE: AS SHOWN

CONTENT:
LIGHTING PLAN

SHEET NO:
E2.1

EDC
ELECTRICAL DESIGN CONSULTANTS
ELECTRICAL ENGINEERS
AUGUSTA OFFICE - PROJECT #: 25173
edc1973.com

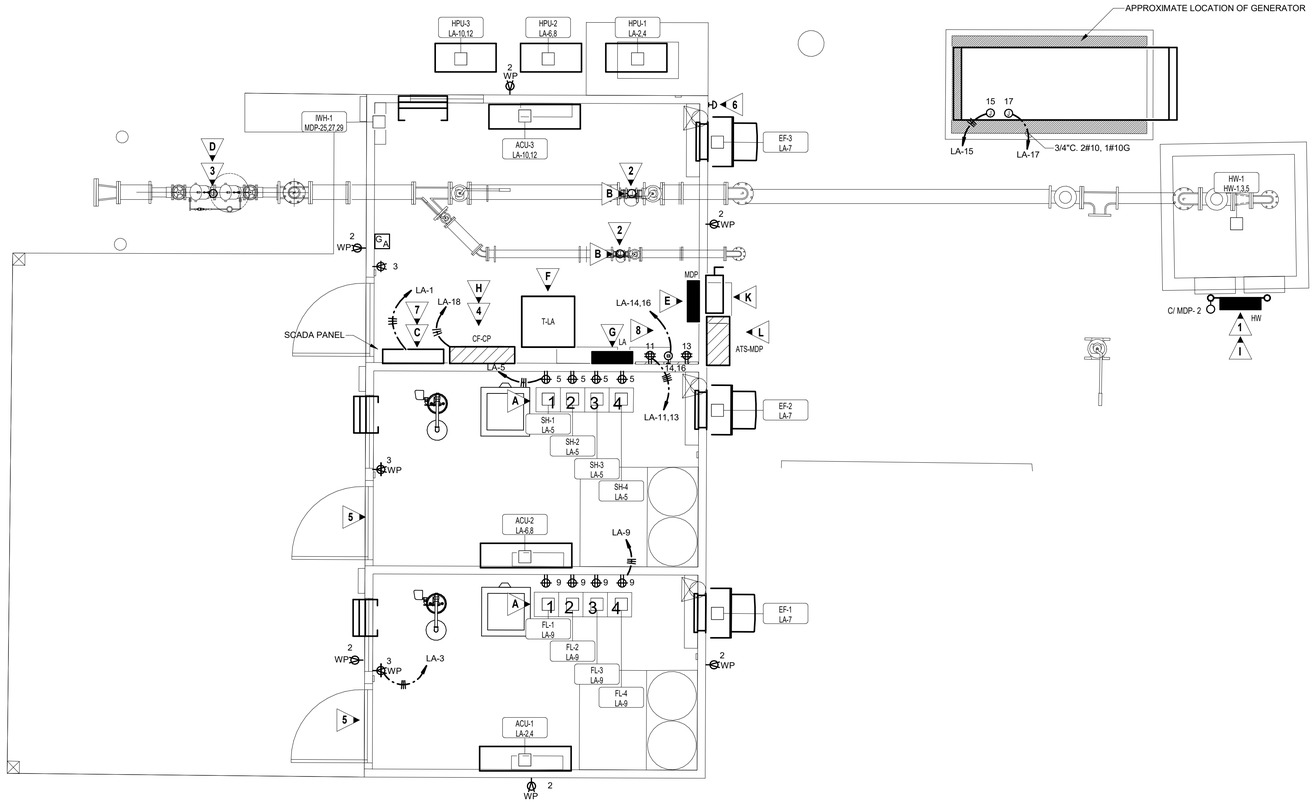

1 POWER PLAN
E3.1 SCALE: 3/8" = 1'-0"

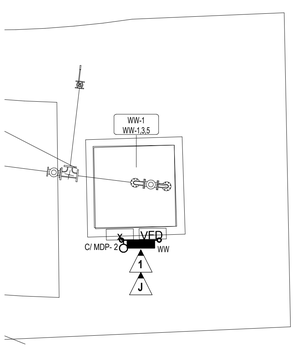

2 ELECTRICAL SITE PLAN - WATERSTONE WELL
E3.1 NO SCALE

MECHANICAL EQUIPMENT TAG DESCRIPTION

EXAMPLE: RAC-1 HR-7,9,11

EQUIPMENT ID:

MECHANICAL/ PLUMBING EQUIPMENT

PANEL - CIRCUIT NUMBER:

RAC-1 HR-7,9,11

NOTE: REFER TO MECHANICAL CONNECTION SCHEDULES FOR CIRCUITING INFORMATION

MECHANICAL CONNECTION SCHEDULE

ID	EQUIPMENT INFORMATION VOLT	PH	MCA	MOCP	CIRCUIT INFORMATION PANEL	NO.	APPARENT LOAD	CONDUIT & WIRE SIZE	NOTES	DISC TYPE	REMARKS
FANS											
EF-1	120 V	1	1.8 A	20.0 A	LA	7	168 VA	3/4"C,2#12,1#12G	A	MRS	-
EF-2	120 V	1	1.8 A	20.0 A	LA	7	168 VA	3/4"C,2#12,1#12G	A	MRS	-
EF-3	120 V	1	1.8 A	20.0 A	LA	7	168 VA	3/4"C,2#12,1#12G	A	MRS	-
HENDERSON WELL PUMP											
HW-1	480 V	3	43.0 A	45.0 A	HW	1,3,5	28600 VA	1"C,3#6,1#10G		CP	-
SPLIT SYSTEM OUTDOOR AIR UNITS											
HPU-1	208 V	1	21.0 A	25.0 A	LA	2,4	3494 VA	3/4"C,2#10,1#10G		FS	30/2/4X
HPU-2	208 V	1	21.0 A	25.0 A	LA	6,8	3494 VA	3/4"C,2#10,1#10G		FS	30/2/4X
HPU-3	208 V	1	36.0 A	40.0 A	LA	10,12	5990 VA	3/4"C,2#8,1#10G		FS	60/2/4X
SPLIT SYSTEMS INDOOR UNITS											
ACU-1	208 V	1	0.0 A	0.0 A	LA	2,4	0 VA		B	MRS	-
ACU-2	208 V	1	0.0 A	0.0 A	LA	6,8	0 VA		B	MRS	-
ACU-3	208 V	1	0.0 A	0.0 A	LA	10,12	0 VA		B	MRS	-
WATER HEATER											
IWH-1	480 V	3	101.6 A	125.0 A	MDP	25,27,29	67575 VA	1 1/2"C,3#1,1#6G		FS	200/3/3R
WATERSTONE WELL PUMP											
WW-1	480 V	3	13.8 A	20.0 A	WW	1,3,5	9145 VA	3/4"C,3#12,1#12G		CP	-

SCHEDULE NOTES:

A. INTERLOCK WITH WALL SWITCH (PROVIDED BY DIVISION 26). LOUVER SHALL FULLY OPEN PRIOR TO UNIT BEING ENERGIZED COORDINATE WITH DIVISION 23. COORDINATE ASSOCIATED LOUVERS WITH MECHANICAL PLANS PRIOR TO ROUGH IN. PROVIDE ALL RACEWAY AND CONDUCTORS FOR A COMPLETE AND OPERATIONAL SYSTEM.

B. "ACU" UNIT IS POWERED FROM "HPU" UNIT. PROVIDE 3/4"C., WITH PULLSTRING FROM "HPU" UNIT TO "ACU" UNIT FOR CONTROLS CABLING. PROVIDE MOTOR RATED SWITCH AT "ACU" UNIT IF POWERED AT 208VAC. IF POWERED AT 24VDC, MOTOR RATED SWITCH IS NOT REQUIRED. COORDINATE WITH MECHANICAL CONTRACTOR PRIOR TO ROUGH IN.

GENERAL NOTES:

1. ALL NEW CONDUIT, BOXES, AND SUPPORTS SHALL BE SCHEDULE 40 PVC, UNLESS NOTED OTHERWISE.
2. ALL FEEDER CONDUCTORS ARE BASED ON COPPER UNLESS OTHERWISE NOTED. CONTRACTOR SHALL BE RESPONSIBLE FOR PROVIDING LUGS ON ALL PANELS, BREAKERS, TRANSFORMERS, ETC. TO ACCOMMODATE CONDUCTOR SIZE SHOWN.
3. ALL EQUIPMENT/RACEWAYS SHALL BE SUITABLE FOR THE ENVIRONMENT IN WHICH IT IS INSTALLED.
4. PROVIDE CONTROLS TO ACTIVATE BOOSTER AND FLUORIDE PUMP WHEN WELL PUMP IS STARTED.
5. PRIOR TO PURCHASE COORDINATE CONTROLS WITH CITY OF FLOWERY BRANCH.

KEYED NOTES:

1. PROVIDE NEMA 4X CONTROL PANEL ON STAINLESS STEEL UNISTRUT RACK AS SHOWN. COORDINATE EXACT RACK REQUIREMENTS WITH CONTROL PANEL MANUFACTURER. REFER TO DETAIL 6/E5.1 FOR TYPICAL CONTROL PANEL RACK MOUNTING DETAIL.
2. PROVIDE (2) SHIELDED TWISTED PAIR CABLE IN 1/2"C. TO CONTROL PANEL FOR ULTRASONIC FLOW METER, EQUAL TO BELDEN 3043A OR AS PER CONTROL PANEL MANUFACTURER INSTALLATION DRAWINGS AND DETAILS.
3. PROVIDE (2) SHIELDED TWISTED PAIR CABLE IN 1/2"C. TO CONTROL/SCADA PANEL FOR DETECTOR ASSEMBLY, EQUAL TO BELDEN 3043A OR AS PER CONTROL/SCADA PANEL MANUFACTURER INSTALLATION DRAWINGS AND DETAILS.
4. SEE RISER DIAGRAM 2/E5.1 FOR CONNECTION REQUIREMENTS.
5. ALL CONDUIT, BOXES, AND SUPPORTS IN THIS SPACE SHALL BE SCHEDULE 40 PVC. SEAL ALL CONDUITS ENTERING THIS SPACE AGAINST MIGRATION OF ALL GAS WITH ELECTRICAL DUCT SEAL.
6. EMERGENCY SHUT OFF PUSH BUTTON FOR GENERATOR. PROVIDE NEMA 4X ENCLOSURE.
7. SCADA PANEL SHALL HAVE THE CAPABILITY TO COMMUNICATE WITH MAIN WATER PLANT VIA RADIO SIGNAL. COORDINATE EXACT SCADA REQUIREMENTS WITH THE CITY OF FLOWERY BRANCH STANDARDS.
8. PROVIDE 3/4"C. 2#10, 1#10G. FOR CIRCUIT

EQUIPMENT LIST:

- A CHEMICAL INJECTOR PUMPS
- B ULTRASONIC FLOW METER
- C SCADA PANEL
- D DETECTOR ASSEMBLY
- E PANEL MDP
- F TRANSFORMER T-LA
- G PANEL LA
- H CHEMICAL INJECTOR CONTROL PANEL
- I HENDERSON WELL CONTROL PANEL
- J WATERSTONE WELL CONTROL PANEL
- K SERVICE DISCONNECT
- L ATS-MDP

DISCONNECT TYPES

TYPE	FURNISH	DESCRIPTION
CP	-	CONTROL PANEL
CB	DIV. 26	DIV. 26 - CIRCUIT BREAKER
FS	DIV. 26	DIV. 26 - FUSED SWITCH
MRS	DIV. 26	DIV. 26 - MOTOR RATED SWITCH
NFS	DIV. 26	DIV. 26 - NON-FUSED SWITCH
NFS (M)	MANUF.	MANUF - NON-FUSED SWITCH

EDC ELECTRICAL DESIGN CONSULTANTS
ELECTRICAL ENGINEERS
AUGUSTA OFFICE - PROJECT #: 25173
edc1973.com

ESG ENGINEERING
6400 Peake Rd
Macon, GA 31210
Ph: (478) 474-4406
Fax: (478) 474-5045

GROUNDWATER WELLS #4 & #5

FOR THE
CITY OF FLOWERY BRANCH

REVISIONS

NO.	DESCRIPTION	DATE
3	REV. 3	12-10-25

CONFORMED SET

GEORGIA REGISTERED NO. 038816 PROFESSIONAL ENGINEER BRIAN W. NEWMAN

DRAWN BY: CT
CHECKED BY: BN
DATE: OCT 2025
SCALE: AS SHOWN

CONTENT:
POWER PLAN

SHEET NO:
E3.1

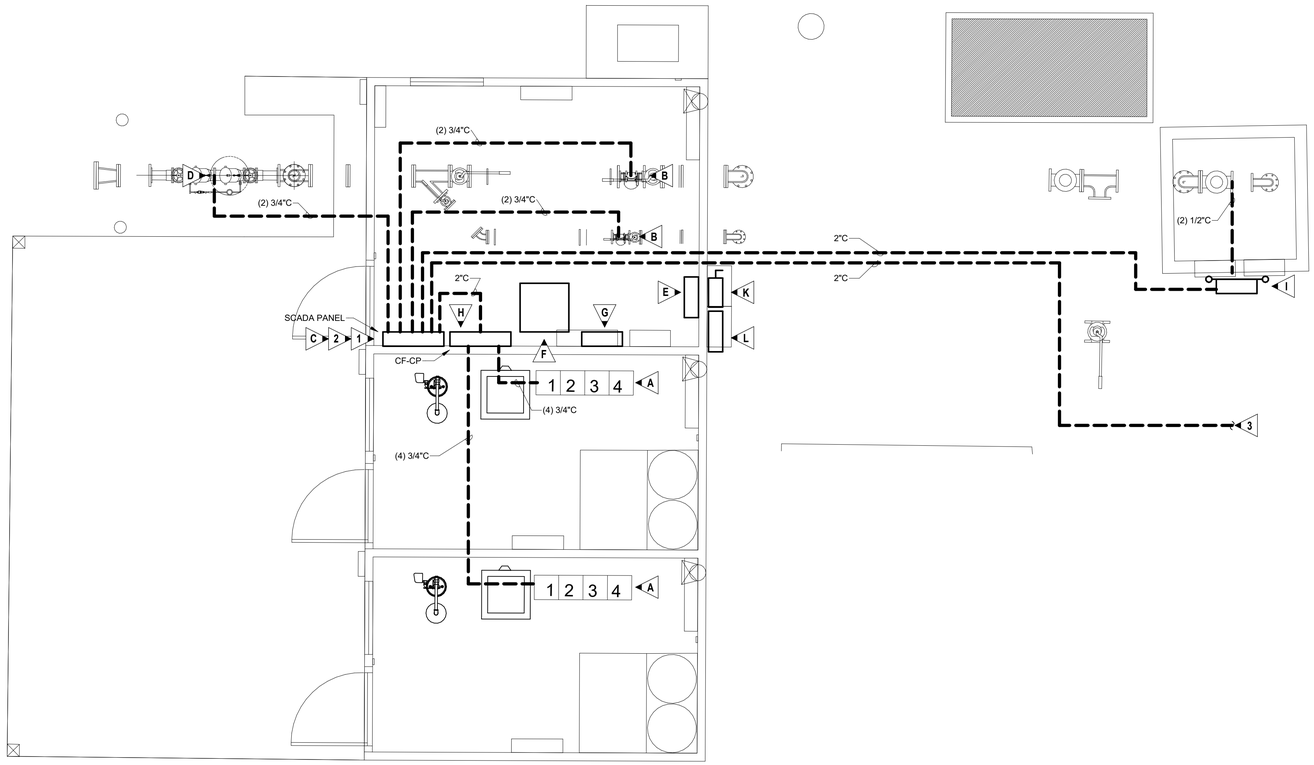

1 E4.1 SYSTEMS/CONTROL PLAN
SCALE: 3/8" = 1'-0"

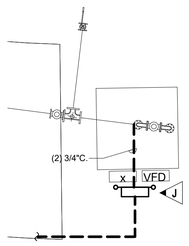

2 E4.1 SYSTEMS/CONTROL PLAN - WATERSTONE WELL
NO SCALE

EQUIPMENT LIST:

- A ➤ CHEMICAL INJECTOR PUMPS
- B ➤ ULTRASONIC FLOW METER
- C ➤ SCADA PANEL
- D ➤ DETECTOR ASSEMBLY
- E ➤ PANEL MDP
- F ➤ TRANSFORMER T-LA
- G ➤ PANEL LA
- H ➤ CHEMICAL INJECTOR CONTROL PANEL
- I ➤ HENDERSON WELL CONTROL PANEL
- J ➤ WATERSTONE WELL CONTROL PANEL
- K ➤ SERVICE DISCONNECT
- L ➤ ATS-MDP

GENERAL NOTES:

1. ALL EQUIPMENT/RACEWAYS SHALL BE SUITABLE FOR THE ENVIRONMENT IN WHICH IT IS INSTALLED.
2. PROVIDE CONTROLS TO ACTIVATE BOOSTER AND FLUORIDE PUMP WHEN WELL PUMP IS STARTED.
3. PRIOR TO PURCHASE COORDINATE CONTROLS WITH CITY OF FLOWERY BRANCH.

KEYED NOTES:

1 ➤ ALL CONDUIT ROUTINGS SHOWN ARE FOR DIAGRAMMATIC PURPOSES ONLY. COORDINATE EXACT ROUTING WITH CIVIL PLAN PRIOR TO ROUGH IN.

2 ➤ ROUTING SHOWN ARE TO PROVIDE CONDUIT SIZES AND CONNECTION POINTS ONLY. REFER TO RISER DIAGRAM ON SHEET E5.1 FOR CONDUCTOR/CABLING REQUIREMENTS FOR EACH CONDUIT.

3 ➤ CONDUIT TO CONTINUE TO WATERSTONE WELL. REFER TO 2/E4.1 FOR WELL LOCATION.

SCADA/CONTROLS NOTE:

CONTRACTOR SHALL EMPLOY THE SERVICES OF AN EXPERIENCED CONTROL SYSTEMS INTEGRATOR (CSI) TO PROVIDE SCADA IMPROVEMENTS AT THE NEW WELL SITE PLC AND WITHIN THE EXISTING CITY SCADA SYSTEM (AT THE WASTEWATER TREATMENT PLANT) AND IN THE EXISTING RTU/PANEL AT THE EXISTING/OFFSITE BOOSTER STATION. THE CITY'S CURRENT BOOSTER PUMPS RUN OFF A SCADA-READ, PRESSURE GAUGE SIGNAL TRANSMITTED VIA RADIO THAT IS CORRELATED TO ELEVATED TANK LEVEL (BOOSTER PUMPS TURN ON WHEN TANK LEVEL = 7' BELOW FULL AND TURN OFF WHEN TANK LEVEL = 1' BELOW FULL).

AT THE NEW WELL SITE THE CONTRACTOR SHALL UTILIZE SOUTHERN FLOW INC. FROM ALPHARETTA, GA TO PROVIDE A NEW REMOTE TELEMETRY UNIT WITH A PROGRAMMABLE LOGIC CONTROLLER (PLC) CAPABLE OF RECEIVING I/O'S AND RELAYS FROM THE NEW SUBMERSIBLE WELL PUMPS, NEW FLOW METERS, AND FROM THE OFFSITE PRESSURE GAUGE SIGNAL (RADIO). THE NEW SYSTEM SHALL BE CAPABLE OF STARTING THE NEW WELL PUMPS AT AN OPERATOR-SPECIFIED TANK LEVEL (SUCH AS 6' BELOW FULL), AND THE PUMPS SHALL RUN FOR EITHER A SET DURATION, TIME OF DAY, OR UNTIL A TOTALIZED FLOW HAS BEEN ACCUMULATED (SUCH AS 50,000 GPD, PER THE PROPOSED FLOW METERS). THE NEW WELL PUMPS SHALL ALTERNATE OPERATIONS SUCH THAT BOTH THE WATERSTONE AND HENDERSON PUMPS DO NOT RUN CONCURRENTLY, AND THE NEW WELL PUMPS SHALL NOT RUN WHILE THE EXISTING OFFSITE BOOSTER PUMPS ARE RUNNING. CONTRACTOR/CSI SHALL INCORPORATE NEW RELAYS FROM THE NEW WELL PUMPS, NEW FLOW METERS, AND NEW RELAYS FROM THE EXISTING BOOSTER STATION INTO THE CITY'S EXISTING SCADA SYSTEM.

THE NEW RTU SHALL BE BASED ON MODICON M340 AND COMMUNICATE VIA CELLULAR TO THE WASTEWATER TREATMENT PLANT. THE RTU SHALL BE COMPRISED OF ALL ITEMS OUTLINED IN THE REMOTE TELEMETRY UNIT REQUIREMENTS.
PROVIDE ALL EQUIPMENT, CABLING, DEVICES, ETC. FOR A COMPLETE AND OPERATIONAL SCADA SYSTEM.

REMOTE TELEMETRY UNIT (RTU) REQUIREMENTS:

- THE NEW RTU SHALL BE BASED ON MODICON M340 AND COMMUNICATE VIA CELLULAR TO THE WASTEWATER TREATMENT PLANT. THE RTU SHALL BE COMPRISED OF THE FOLLOWING BELOW.
- ENCLOSURE:
  a. NEMA 12 PAINTED CARBON STEEL ENCLOSURE
  b. ENCLOSURE SUBPANEL
  c. CUSTOM SHELF FOR CELLULAR MODEM
- PLC:
  a. MODICON M340 CPU
  b. 24VDC POWER SUPPLY
  c. ETHERNET PORT
  d. 6-SLOT RACK (RECOMMENDED FOR EXPANSION)
  e. 8-CHANNEL ANALOG INPUT
  f. 4-CHANNEL ANALOG OUTPUT
  g. 16-CHANEL DISCRETE INPUT
  h. 16-CHANEL DISCRETE OUTPUT
- POWER SUPPLY AND UPS:
  a. 24VDC PANEL POWER SUPPLY AND UPS
- COMMUNICATION EQUIPMENT
  a. SIERRA WIRELESS CELLULAR MODEM XR60 MODEM PROVISIONING INCLUDING MODEM SETUP WITH CARRIER ACTIVATION, TESTING AND LABELING
- MISC:
  a. ISOLATION RELAYS AND SOCKETS ON ALL DISCRETE INPUTS AND OUTPUT
  b. SURGE BOARD ARRESTORS FOR ANALOG SIGNALS
  c. FUSE BLOCKS WITH INDICATORS
  d. CIRCUIT BREAKERS
  e. WIRE TERMINALS
  f. WIRE DUCT
  g. INTRUSION SWITCH

EXISTING BOOSTER PUMP STATION MODIFICATIONS:

AT THE EXISTING BOOSTER PUMP STATION (ROBERTS DR GROUND STORAGE TANK SITE), THE SYSTEM INTEGRATOR SHALL MODIFY THE PROGRAMMING AND PHYSICAL I/O IF NECESSARY TO INCORPORATE THE REQUIRED INTERLOCKS DESCRIBED ABOVE TO PREVENT THE DIFFERENT WELL SITES FROM OPERATING AT THE SAME TIME AS DESCRIBED IN SCADA/CONTROL NOTES.

EXISTING SCADA SYSTEM MODIFICATIONS AT THE WASTEWATER TREATMENT PLANT

THE SYSTEM INTEGRATOR SHALL PROVIDE AND INSTALL A SIERRA WIRELESS CELLULAR MODEM AT THE WASTEWATER TREATMENT PLANT, AS WELL AS ANY OTHER ANTENNAS AND ACCESSORIES NECESSARY TO COMMUNICATE TO THE NEW WELL SITE RTU. THE EXISTING WONDERWARE HMI SHALL BE MODIFIED TO INCLUDE THE WELL SITE AND THE FUNCTIONALITY ABOVE INCLUDING THE INTERLOCKS AND THE PRESSURE TRANSMITTER AT THE EXISTING BOOSTER PUMP STATION.

COMPATIBILITY

THE SYSTEM INTEGRATOR SHALL ENSURE THE NEW CELLULAR BASED RTU IS COMPATIBLE WITH THE EXISTING RADIO BASED TELEMETRY SYSTEM AND EXISTING SCADA HMI TO PROVIDE RELIABLE CONTROL AND OPERATOR INTERFACE FOR THE FLOWERY BRANCH.

EDC
ELECTRICAL DESIGN CONSULTANTS
ELECTRICAL ENGINEERS
AUGUSTA OFFICE - PROJECT #: 25173
edc1973.com

ESG ENGINEERING
6400 Peake Rd
Macon, GA 31210
Ph: (478) 474-4995
Fax: (478) 474-5045

GROUNDWATER WELLS #4 & #5
FOR THE
CITY OF FLOWERY BRANCH

REVISIONS

NO.	DESCRIPTION	DATE
3	REV 3	12-10-25

CONFORMED SET

GEORGIA REGISTERED NO. 033816 PROFESSIONAL ENGINEER BRIAN W. NEWLAND

DRAWN BY: CT
CHECKED BY: BN
DATE: OCT 2025
SCALE: AS SHOWN

CONTENT:
SYSTEMS/CONTROLS PLAN

SHEET NO:
E4.1

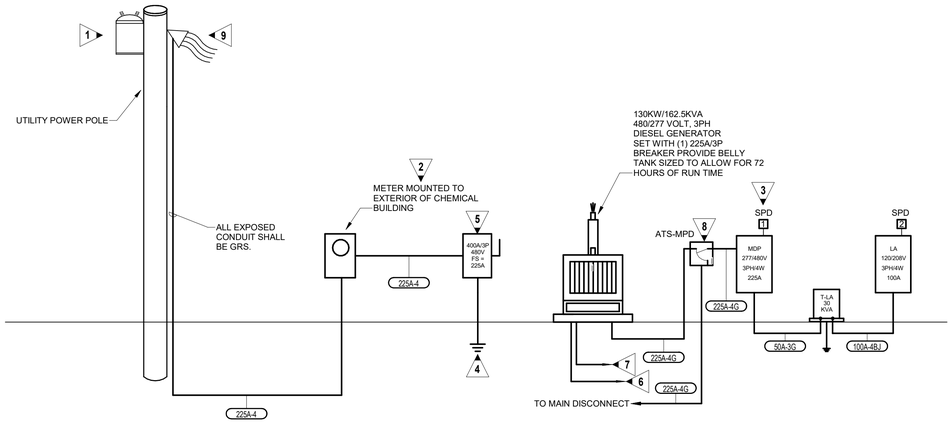

1 POWER RISER DIAGRAM
E5.1 NO SCALE

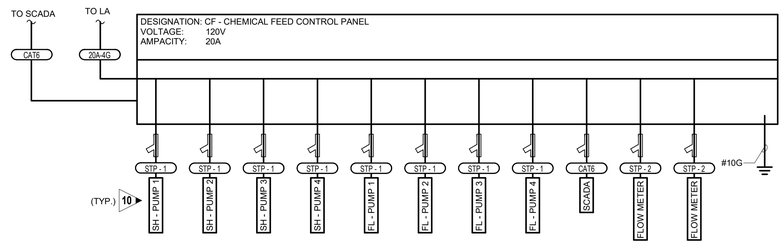

2 POWER RISER DIAGRAM - CF CONTROL PANEL
E5.1 NO SCALE

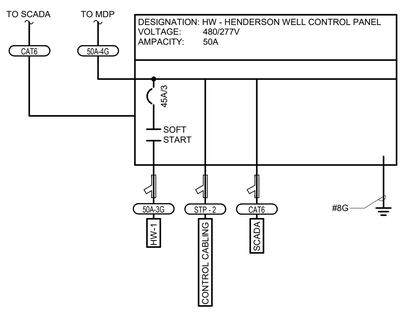

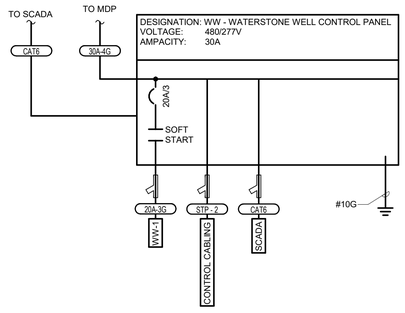

3 POWER RISER DIAGRAM - CONTROL PANEL
E5.1 NO SCALE

KEYED NOTES:

1. NEW UTILITY POLE MOUNTED TRANSFORMERS TO BE PROVIDED AND INSTALLED BY UTILITY COMPANY.
2. METER BY UTILITY COMPANY, INSTALLED BY CONTRACTOR.
3. CONTRACTOR SHALL FIELD MARK SERVICE EQUIPMENT IN ACCORDANCE WITH NEC 110.24 IN REGARD TO MAXIMUM AVAILABLE FAULT CURRENT. MARKING SHALL CLEARLY DENOTE MAXIMUM AVAILABLE FAULT CURRENT AND INCLUDE THE DATE THE FAULT CURRENT CALCULATION WAS PERFORMED. DIVISION 26 SHALL BE RESPONSIBLE FOR OBTAINING AVAILABLE FAULT CURRENT AT TRANSFORMER FROM LOCAL UTILITY. PERFORM CALCULATIONS BASED ON SUCH.
4. SEE DETAIL 1/E6.0 FOR SERVICE GROUNDING AND BONDING PLATE DETAIL.
5. 400A, 3 POLE SERVICE ENTRANCE RATED DISCONNECT FUSED DOWN TO 225A. DISCONNECT SHALL BE NEMA 4X RATED. PROVIDE WITH NEUTRAL BAR AND EQUIPMENT GROUND BAR. INSTALL BONDING JUMPER AT DISCONNECT.
6. 1 1/4"C., TO REMOTE GENERATOR ANNUNCIATOR SEE MANUFACTURER'S PUBLISHED DATA FOR NUMBER OF CONDUCTORS REQUIRED. SEE SHEET E3.1 FOR LOCATION OF ANNUNCIATOR.
7. 2-1"C., TO AUTOMATIC TRANSFER SWITCH FOR CONTROL WIRES
8. 225A, 3 POLE, NEMA 4X, SOLID NEUTRAL TIME DELAYED AUTOMATIC TRANSFER SWITCH.
9. NEW WEATHERHEAD TO BE PROVIDED AND INSTALLED BY DIVISION 26. 10' OF SLACK CONDUCTORS SHALL BE PROVIDED FOR UTILITY COMPANY TO CONNECT TO POLE MOUNTED UTILITY TRANSFORMER.
10. CHEMICAL INJECTOR PUMP TO BE POWERED BY 120V RECEPTACLE. SEE SHEET E3.1 FOR CONNECTION REQUIREMENTS. TYPICAL FOR ALL PUMPS CONNECTED TO CONTROL PANEL.

SPD SCHEDULE

TYPE	DESCRIPTION	NOTES
1	MAIN DISTRIBUTION PANEL (277/480 VOLTS, 3 PHASE) - 300,000 AMP RATED	1
2	DISTRIBUTION PANEL (120/208 VOLTS, 3 PHASE) - 80,000 AMP RATED	1

SCHEDULE NOTES:

1. SEE SPECIFICATIONS FOR DETAILS.

FEEDER SCHEDULE

DESIGNATION	CONDUIT & CONDUCTORS
20A-3G	3/4" C - 2#12, 1#12G
20A-4G	3/4" C - 3#12, 1#12G
30A-4G	1" C - 4#10, 1#10G
50A-3G	1" C - 3#8, 1#10G
50A-4G	1" C - 4#8, 1#10G
100A-4BJ	2" C - 4#2, 1#8G
225A-4	2.5" C - 4#4/0
225A-4G	2.5" C - 4#4/0, 1#4G
CAT6	2" C - CAT6 CABLE
STP - 1	3/4" C -SHIELDED TWISTED PAIR
STP - 2	[2] 3/4" C -SHIELDED TWISTED PAIR

200A - 4 G - N — FEEDER DESIGNATION

- (N) - INDICATES 200% NEUTRAL CONDUCTOR
- GROUND CONDUCTORS:
  - (0) - NO GROUND
  - (G) - EQUIPMENT OR ISOLATED GND
  - (BJ) - GROUNDING ELECTRODE
  - (BJIG) - GROUNDING ELECTRODE AND ISOLATED GND
- SYSTEM DESCRIPTION:
  - (3) - 1Ø 3W OR 3Ø 3W
  - (4) - 3Ø, 4W
- CONDUCTOR AMPACITY:
  - (AL) - INDICATES ALUMINUM CONDUCTORS

EDC
ELECTRICAL DESIGN CONSULTANTS
ELECTRICAL ENGINEERS
AUGUSTA OFFICE - PROJECT #: 25173
edc1973.com

ESG ENGINEERING
6400 Peake Rd
Macon, GA 31210
Ph.: (478) 474-4696
Fax: (478) 474-5045

GROUNDWATER WELLS #4 & #5

FOR THE
CITY OF FLOWERY BRANCH

REVISIONS

NO.	DESCRIPTION	DATE
3	REV 3	12-10-25

CONFORMED SET

GEORGIA REGISTERED NO. 038816 PROFESSIONAL ENGINEER JONATHAN W. NEWLIN

DRAWN BY: CT
CHECKED BY: BN
DATE: OCT 2025
SCALE: AS SHOWN

CONTENT:
POWER RISER DIAGRAM

SHEET NO:
E5.1

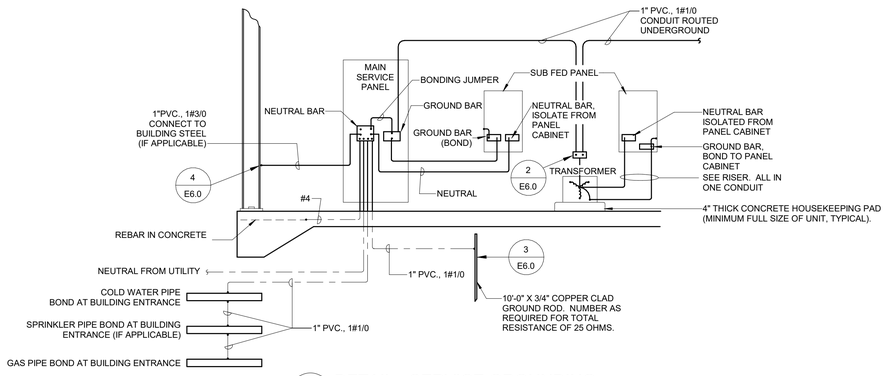

1 E6.0 DETAIL - SERVICE GROUNDING
NO SCALE

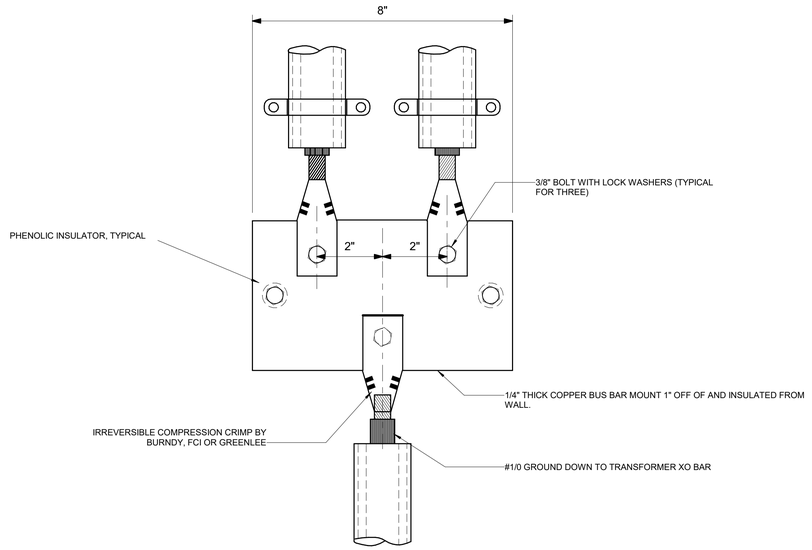

2 E6.0 DETAIL - GROUND CABLE TO BUS BAR
NO SCALE

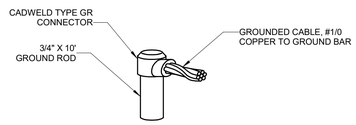

3 E6.0 DETAIL - CABLE CONNECTION TO GROUND ROD
NO SCALE

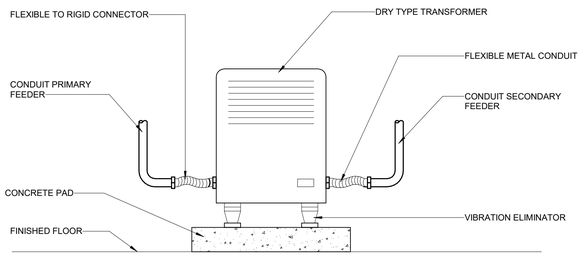

5 E6.0 DETAIL - FLOOR MOUNTED TRANSFORMER
NO SCALE

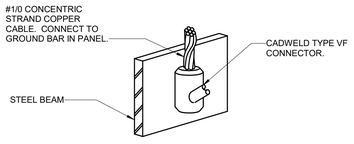

4 E6.0 DETAIL - CABLE CONNECTION TO STEEL BEAM
NO SCALE

ESG ENGINEERING
6400 Peake Rd
Macon, GA 31210
Ph.: (478) 474-4996
Fax: (478) 474-5045

GROUNDWATER WELLS #4 & #5

FOR THE
CITY OF FLOWERY BRANCH

REVISIONS

NO.	DESCRIPTION	DATE
3	REV 3	12-10-25

CONFORMED SET

GEORGIA REGISTERED NO. 038816 PROFESSIONAL ENGINEER BRYAN W. NEWLAND

DRAWN BY: CT
CHECKED BY: BN
DATE: OCT 2025
SCALE: AS SHOWN

CONTENT:
ELECTRICAL DETAILS

SHEET NO:
E6.0

EDC
ELECTRICAL DESIGN CONSULTANTS
ELECTRICAL ENGINEERS
AUGUSTA OFFICE - PROJECT #: 25173
edc1973.com

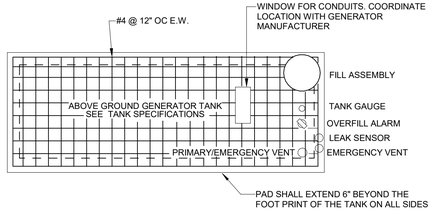

1 E6.1 DETAIL - GENERATOR CONCRETE PAD AND FUEL TANK - PLAN VIEW
NO SCALE

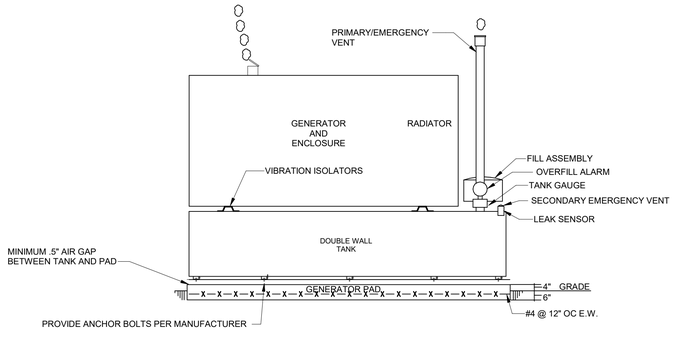

TANK SPECIFICATIONS

PRIMARY TANK SHALL BE MINIMUM 10 GAUGE STEEL, UL142 LABEL AND HAVE THE FOLLOWING:

- FUEL SUPPLY AND FUEL RETURN OPENINGS (1" NPT MINIMUM EACH)
- *NORMAL (PRIMARY) TANK VENT OPENING ON PRIMARY TANK (2" NPT MINIMUM)
- *EMERGENCY PRESSURE RELIEF (SECONDARY) VENT OPENING SIZED PER NFPA 30
- OPENING FOR LOW LEVEL AND HIGH LEVEL FUEL ALARM SWITCHES (2"NPT MINIMUM)
- MECHANICAL FUEL GAUGE OPENING (1.5" NPT MINIMUM)
- STICK PORT OPENING (1.5" NPT MINIMUM)
- TANK FILL BUNG (2" NPT MINIMUM)

SECONDARY TANK SHALL HAVE THE FOLLOWING:

- MONITORING PORT ON INTERSTICE OF SECONDARY TANK (2" NPT MINIMUM)
- *EMERGENCY PRESSURE RELIEF (SECONDARY) VENT OPENING SIZED PER NFPA 30

* PRIMARY AND EMERGENCY SECONDARY TANK VENTS SHALL BE EXTENDED OUTSIDE OF THE GENERATOR ENCLOSURE AND TERMINATE AT A MINIMUM HEIGHT OF (12) FEET ABOVE GRADE

FILL ASSEMBLY:

- TANK FILL CONNECTION SHALL BE A CAM LOCK STYLE TIGHT FILL WITH AN OVERFILL PREVENTION VALVE (CLAY & BAILEY MINO #1228 OR APPROVED ALTERNATE) SET TO STOP FLOW OF FUEL WHEN THE TANK REACHES 95% OF TANK CAPACITY. THE FILL SHALL ALSO INCLUDE A SPILL CONTAINMENT BUCKET (EBW MODEL # 706-420-01) AND SHALL BE LOCATED SUCH THAT THE DELIVERY OPERATOR HAS DIRECT ACCESS TO THE TANK GAUGE

TANK GAUGING:

- A MECHANICAL DIRECT READING TYPE OF FUEL LEVEL GAUGE INDICATOR SHALL BE PROVIDED IN ADDITION TO ANY ELECTRONIC MONITORING SYSTEM. THE FUEL LEVEL INDICATOR SHALL BE A ROCHESTER GAUGES SERIES 6500 SENIOR GAUGE OR APPROVED ALTERNATE AND SHALL BE MOUNTED SO THAT THE DELIVERY OPERATOR HAS DIRECT ACCESS TO IT

LEAK AND OVERFILL ALARMS:

- A LIQUID SENSOR SHALL BE MOUNTED INSIDE THE SECONDARY TANK AND WIRED TO THE GENERATOR CONTROL PANEL. SENSOR SHALL BE INCON TSP-ULS OR APPROVED ALTERNATE
- A REMOTE OVERFILL BATTERY OPERATED ALARM HORN (MORRISON BROTHERS 918TCP OR APPROVED ALTERNATE) SHALL BE PROVIDED AND ALARM WHEN TANK REACHES 90% CAPACITY AND SHALL BE MOUNTED SO THAT THE DELIVERY OPERATOR HAS DIRECT ACCESS TO IT

SIGNAGE:

- TANK SHALL BE LABELED WITH FUEL TYPE AND CAPACITY. LABEL SHALL BE 2" WHITE LETTERS ON BLACK BACKGROUND AND ATTACHED TO THE TANK WITH ADHESIVE

ACCESSORIES:

- EMERGENCY VENT SHALL BE OPW 202 OR EQUAL SIZED BY TANK MANUFACTURER PER NFPA 30
- DIELECTRIC COUPLINGS AND/OR FLANGED KITS SHALL BE PROVIDED AT ALL COPPER TO STEEL CONNECTIONS AND AS REQUIRED TO ISOLATE THE PIPING FROM THE TANK.

2 E6.1 DETAIL - GENERATOR CONCRETE PAD - SIDE VIEW
NO SCALE

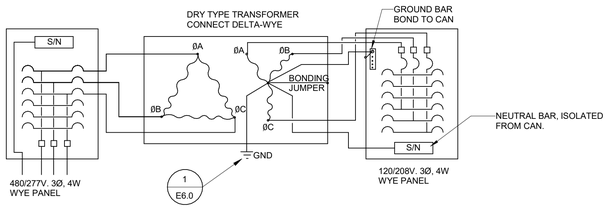

4 E6.1 DETAIL - DRY TYPE TRANSFORMER CONNECTION
NO SCALE

FOR 120/208V PANELS:

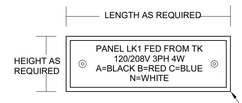

NOTE: DESIGNATIONS ARE FOR REFERENCE ONLY. LABELING SHALL BE OF EQUIPMENT BEING SERVED.

FOR 277/480V PANELS:

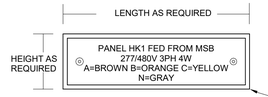

FOR TRANSFORMERS:

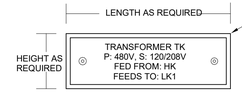

FOR DISCONNECTS:

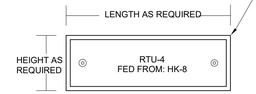

POWER LABEL SHALL BE: BLACK PHENOLIC PLATE WITH ENGRAVED WHITE LETTERING, POP RIVETED TO EQUIPMENT

3 E6.1 IDENTIFICATION TAG DETAIL
NO SCALE

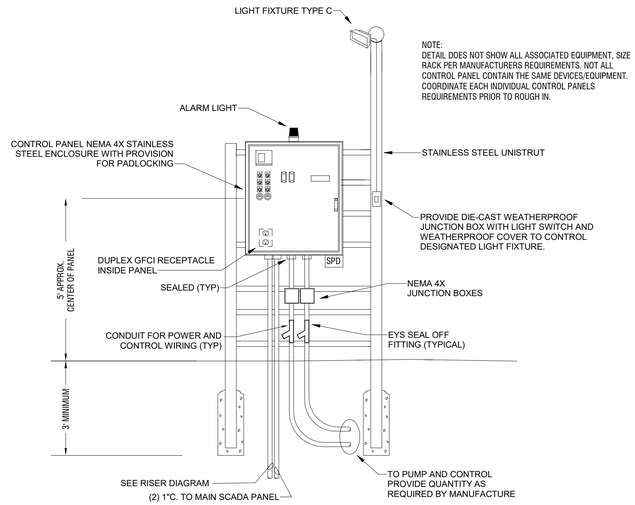

5 E6.1 DETAIL - TYPICAL CONTROL PANEL RACK DETAIL
NO SCALE

ESG ENGINEERING
6400 Peake Rd
Macon, GA 31210
Ph: (478) 474-4066
Fax: (478) 474-5045

GROUNDWATER WELLS #4 & #5
FOR THE
CITY OF FLOWERY BRANCH

REVISIONS

NO.	DESCRIPTION	DATE
3	REV 3	12-10-25

CONFORMED SET

GEORGIA REGISTERED NO. 038816 PROFESSIONAL ENGINEER BRYAN W. NEWLAND

DRAWN BY: CT
CHECKED BY: BN
DATE: OCT 2025
SCALE: AS SHOWN

CONTENT:
ELECTRICAL DETAILS

SHEET NO:
E6.1

EDC ELECTRICAL DESIGN CONSULTANTS
ELECTRICAL ENGINEERS
AUGUSTA OFFICE - PROJECT #: 25173
edc1973.com

PLUMBING SPECIFICATIONS

Provide all plumbing items indicated on the drawings, described herein or otherwise required for a complete and proper installation, including:
A. Plumbing fixtures, fittings and equipment.
B. Hot and cold water systems.
C. Drain waste and vent piping systems.
D. Indirect waste piping, including all valves, traps, piping and accessories for all equipment. Size per equipment requirements.

Comply with all applicable codes, standards and ordinances, including requirements of the Georgia State Minimum Standard Plumbing Code (2018 International Plumbing Code with all Georgia State Amendments), Georgia State Minimum Standard Gas Code (2018 International Gas Code with all Georgia State Amendments), Georgia State Minimum Standard Energy Code (2015 International Energy Conservation Code with all Georgia State supplements and Amendments), and the DOJ 2010 ADA Standards for Accessible Design with Georgia Amendments of Rule 120-3-20.

The contractor should not attempt to precisely scale dimensions from these drawings to obtain construction dimensions and clearance. The contractor shall verify all actual dimensions and clearances. Although these plans are diagrammatic in nature, they shall be followed as closely as site conditions, new construction, and work by other trades shall permit. Deviations from these drawings, which are required to conform to the available space or to actual building construction, shall be made at no additional cost to the owner.

The submission of a bid or proposal will be construed as evidence that the contractor has familiarized himself with the plans and building site. Claims made subsequent to the proposal for materials and/or labor due to difficulties encountered will not be recognized unless these difficulties could not have been foreseen, even though proper examination had been made.

Fabrication or ordering of any material or equipment prior to verification of site conditions shall be done at the contractor's risk.

All equipment and material shall be new and of first quality. Equipment and material shall be the same or equal to the basis of design listed on these drawings.

Coordinate with all trades and verify all equipment rough-in items and locations with the equipment supplier or contractor. All re-work and corrections required due to lack of coordination shall be the contractor's responsibility, and done at no cost to the owner.

Submit shop drawings and material data submittals to the engineer for approval before installation. No substitutions shall be allowed without prior approval by the engineer. Product data for piping, insulation, valves, specialties and all fixtures and equipment scheduled and specified here. For each submittal for review, allow 15 days excluding delivery time to and from the Contractor.

All equipment and flue materials shall be U.L. listed.

Installation shall comply with manufacturer requirements including all clearances recommended for proper operation of service. All serviceable parts shall be readily accessible.

Sanitary drain, roof drainage and vent piping shall be ASTM D2665 schedule 40 PVC with PVC Socket Fittings (ASTM D 2665, made to ASTM D 3311, drain, waste, and vent patterns and to fit Schedule 40 pipe). Slope pipe sizes 6" and under at 1/8 inch per foot continuously toward public sewer. Slope pipe sizes 8" and larger at 1/16 inch per foot continuously toward public sewer. All aboveground piping shall be adequately supported. Install underground, PVC plastic drainage piping according to ASTM D2321. Install aboveground PVC piping according to ASTM D 2665. Cellular Core PVC (Foam Core PVC) not acceptable. Provide PVC IPEX type 1 expansion joints on alternating floors on horizontal sewer, storm, and vent risers over 30 feet tall.

Insulate aboveground floor drains, traps, and sanitary drain piping within 10 feet of drain receiving condensate and equipment drain water below 60° with 1" thick type i performed glass-fiber pipe insulation, 1-1/2" cellular glass, or 1" flexible elestomeric.

All above ground domestic water distribution piping shall be ASTM D 2846, SDR11, schedule 40 CPVC with socket fittings. All piping shall be adequately supported. Disinfect all domestic water piping after installation. All underground domestic water distribution piping 1" and smaller shall be ASTM D 876 & ASTM F 877 PEX with no fittings underground. All underground domestic water distribution piping 1-1/4" and larger shall be ASTM D 1785 schedule 40 PVC with ASTM D 2466 PVC socket fittings. Wrap piping larger than 2" in return air plenums with fire barrier plenum rated wrap.

Chemical waste piping shall be Charlotte pipe Chemdrain CPVC chemical waste schedule 40 drainage dipe and fittings.

DOMESTIC WATER PIPING CLEANING

A. Clean and disinfect potable domestic water piping as follows:
   1. Purge new piping and parts of existing piping that have been altered, extended, or repaired before using.
   2. Use purging and disinfecting procedures prescribed by authorities having jurisdiction; if methods are not prescribed, use procedures described in either AWWA C651 or AWWA C652 or follow procedures described below:
      a. Flush piping system with clean, potable water until dirty water does not appear at outlets.
      b. Fill and isolate system according to either of the following:
         1) Fill system or part thereof with water/chlorine solution with at least 50 ppm (50 mg/L) of chlorine. Isolate with valves and allow to stand for 24 hours.
         2) Fill system or part thereof with water/chlorine solution with at least 200 ppm (200 mg/L) of chlorine. Isolate and allow to stand for three hours.
      c. Flush system with clean, potable water until no chlorine is in water coming from system after the standing time.
      d. Repeat procedures if biological examination shows contamination.
      e. Submit water samples in sterile bottles to authorities having jurisdiction.
B. Prepare and submit reports of purging and disinfecting activities. Include copies of water-sample approvals from authorities having jurisdiction.
C. Clean interior of domestic water piping system. Remove dirt and debris as work progresses.

Domestic water piping shall be insulated with Owens Corning type ASJ/SSL-II heavy density fiber glass with all service jacket. Insulation shall have a flame spread rating not to exceed 25 and a smoke density not to exceed 50 when tested in accordance with U.B.C. standard 42-1. Provide mastic on all joints and exposed ends of insulation. Insulate domestic Cold water piping in unconditioned spaces such as exterior corridors, attic, basements, etc with 1/2" thick insulation for piping 1-1/4" & smaller and 1" thick insulation for piping 1-1/2" & larger. Insulate all domestic Hot water supply and return piping with 1" thick insulation for piping 1-1/4" & smaller and 1-1/2" thick insulation for piping 1-1/2" & larger.

HW & CW Valves: Use pipe size valves, as shown below:
A. Ball: Spears CPVC True Union.
B. Check: Spears CPVC True Union.

Lavatory/ Sink supply fittings: NSF Standard: Comply with NSF/ANSI 61 Annex G, "Drinking Water System Components – Health Effects," for supply-fitting materials that will be in contact with potable water. Standard: ASME A112.18.1/CSA B125.1. Supply Stops: Chrome-plated-brass, one-quarter-turn, ball-type valve with inlet connection matching supply piping. Wheel handle operation. Risers: Chrome-plated, soft-copper flexible tube for exposed applications and ASME A112.18.6, braided- or corrugated-stainless-steel, flexible hose for conceal behind cabinet applications.

Provide ADA Supply and Drain Protective Shielding Guards on ADA fixtures that piping is exposed. Supply and Drain Protective Shielding Guards shall comply with ICC A117.1 and Americans with Disabilities Act (ADA) requirements. Manufactured plastic wraps shall cover hot and cold water supplies, trap, and drain piping.

All pipe hangers, clamps and channels shall be adequately sized to carry pipe loads and prevent sagging.

All other materials not specifically described but required for a complete and proper installation of work of this section, shall be new, first quality of their respective kinds, and as selected by the contractor subject to acceptance by the engineer.

Lay out the plumbing system in careful coordination with the drawings, determining proper elevations for all components of the system and using only the minimum number of bends to produce a satisfactorily functioning system. Follow the general layout shown on the drawings in all cases except where other work may interfere. Unless shown otherwise, lay out all pipes to fall within partition, wall floor, or roof cavities, and to not require furring other than as shown on the drawings.

Do not cut into or reduce the size of any load-carrying member without the prior approval of the architect. Install all pipes to clear all beams and obstructions.

Extend all plumbing vents above roof to parapet height.

Permanently close and make weatherproof any openings or penetrations of the building envelope made for plumbing systems. All wall and floor penetrations shall be sleeved. All exterior wall or foundation wall penetrations shall use a mechanical seal.

Coordinate all roof penetrations with architectural plans and building and roofing trades.

Provide shut-off balls valves and unions at all water connections to equipment and appliances.

Isolate all dissimilar metals with "EPCO" dielectric unions, except for brass or bronze valves with steel pipe.

Protect the potable water supply against backflow and siphonage from equipment, fixtures, etc., using approved backflow and anti-siphon devices.

Thoroughly clean all piping and equipment. Removing all dirt, rust, oil, and plaster.

Test Sanitary and storm drainage piping by plugging all openings and filling with water to a height equal to a 10 foot head. Allow to stand one hour or longer as required. Repair leaking joints and then re-test.

No work shall be covered until it has been inspected and accepted by the local authority.

Domestic water piping tests: Fill domestic water piping. Check components to determine that they are not air bound and that piping is full of water. Test for leaks and defects in new piping and parts of existing piping that have been altered, extended, or repaired. Leave new, altered, extended, or replaced domestic water piping uncovered and unconcealed until it has been tested and approved. Expose work that was covered or concealed before it was tested. Cap and subject piping to static water pressure of 50 psig (345 kPa) above operating pressure, without exceeding pressure rating of piping system materials. Isolate test source and allow it to stand for four hours. Leaks and loss in test pressure constitute defects that must be repaired. Repair leaks and defects with new materials, and retest piping or portion thereof until satisfactory results are obtained.

The entire system shall be warranted for a period of one (1) year beginning with Owner's acceptance of the work. All labor and materials necessary to repair or replace the system, or portions thereof, during that time shall be warranted for a period of one (1) year from the repair or replacement.

Install piping in concealed locations, unless otherwise indicated and except in equipment rooms, and service areas. Install piping indicated to be exposed and piping in equipment rooms and service areas at right angles or parallel to building walls. Diagonal runs are prohibited unless specifically indicated otherwise. Install piping above accessible ceilings to allow sufficient space for ceiling panel removal. Install piping to permit valve servicing. Install piping at indicated slopes. Install piping free of sags and bends. Install fittings for changes in direction and branch connections. Install piping to allow application of insulation. Select system components with pressure rating equal to or greater than system operating pressure. Install escutcheons for penetrations of walls, ceilings, and floors. Verify final equipment locations for roughing-in.

Confirm that millwork is constructed with adequate provision for the installation of counter top lavatories and sinks.

Seal fixtures to wall and floor surfaces with sealant, color to match fixture.

All vents thru roof (VTR) shall be offset a minimum of 10'-0" from all outside air intakes.

Provide Plastic Pipe Markers on all aboveground plumbing piping that Comply with ASME A13.1. Minimum information indicating flow direction arrow and identification of fluid being conveyed. Install labeling on pipe at intervals of not more than 20 feet and at least once in each room.

Provide a complete through penetration fire stopping assembly for fire resistance rated wall assemblies. The through penetration assembly must be listed by an approved third-party test agency (UL), and include the entire listed assembly with all notations. Refer to architectural drawings for fire wall locations.

Approved manufactures: (Items submitted shall be approved by architect and engineer. Architect and engineer reserve the right to reject any item substituted for basis of design item for any reason.)

Supplies & Traps: Engineered Brass CO., Mcguire, Charlotte Pipe, Brasscraft, IPS, Watts, Zurn
Floor Drains & Cleanouts: Zurn, Jay R Smith, Proset, Watts, Mifab, Wade, Josam, Sioux Chief, Oatey
Tankless Electric Water Heaters: A.O. Smith, Rheem, EEmax, Chronomite
Wall Hydrants/ Hose Bibbs: MIFAB, Jay R. Smith, Wade, Watts, Woodford, Zurn
CPVC Valves: American, NIBCO, Spears
Mop Sinks: Stern Williams, Acorn, Fiat
Wash Fountains: Acorn, Willoughby, Bradley
Eyewash: Stingray, Guardian, Acorn, Bradley, Haws, Speakman

FIXTURE AND EQUIPMENT SCHEDULE

#	FIXTURE TYPE	WASTE		WATER SUPPLY		WATER FIX. CONN.		MODEL NUMBER
		BELOW FLOOR	FIXTURE CONN.	COLD	HOT	COLD	HOT	
ESS	COMBINATION DRENCH SHOWER AND EYE/FACE WASH				1-1/4"		1-1/4"	ULINE H-10735
NFWH1	BACKFLOW PROTECTED AUTOMATIC DRAINING FREEZELESS HOSE BIBB			3/4"		3/4"		PRIER C-634
NFWH2	BACKFLOW PROTECTED AUTOMATIC DRAINING FREEZELESS HOSE BIBB				3/4"		3/4"	PRIER C-634
RPZ	REDUCED PRESSURE ZONE ASSEMBLIES			SEE DWGS.		SEE DWGS.		WATTS LF009.
FD	FLOOR DRAIN WITH WATERLESS TRAP PRIMER	SEE DWGS	SEE DWGS					ZURN Z730
GCO	GRADE CLEANOUT	SEE DWGS	SEE DWGS					WATTS CO-200-RX-4-60.
MOP	MOLDED HIGH-DENSITY COMPOSITE BASIN							PFMB2424

CONTRACTOR SHALL COORDINATE WITH CIVIL SHEET C9.2 & C9.1 AND ARCHITECT BEFORE ORDERING FIXTURES

WATER HEATER SCHEDULE

MARK	MANUFACTURER	MODEL NUMBER	TYPE	TURN ON (GPM)	KW	PHASE	VOLTAGE
WH	EEMAX	PRO SERIES XTP054480	TANKLESS ELECTRIC	0.5	54.0	3	480

NOTE: PROVIDE CORROSION RESISTANCE N4X6 CABINET

LEGEND

—⋈—	BALL VALVE	— — —	COLD WATER
—⋈—	CHECK VALVE	— - — - —	HOT WATER
—○—	PIPE UP	———	SEWER
—⊖—	PIPE DOWN	CW	COLD WATER
F.F.E.	FINISHED FLOOR ELEVATION	HW	HOT WATER
(TYP)	TYPICAL	—▽—	STRAINER
N.T.S.	NOT TO SCALE	PDI-B(H)	PDI UNIT WATER HAMMER ARRESTOR

TOTAL ENGINEERS
169 New Street, Macon, GA 31201
(478)741-4632 - T.E. project # 25-101
www.totalengineers.com
GA COA NO # PEF009195 EXP: 06/30/2026

ESG ENGINEERING

GROUNDWATER WELLS #4 & #5

FOR THE
CITY OF FLOWERY BRANCH

REVISIONS

NO.	DESCRIPTION	DATE
2	ADDENDUM 2	

CONFORMED SET

GEORGIA REGISTERED PROFESSIONAL ENGINEER KRUNAL M PATEL

DRAWN BY: KMP
CHECKED BY: KMP
DATE:
SCALE:

CONTENT:

PLUMBING SCHEDULES & SPECIFICATIONS

SHEET NO:

P0.1

Last Saved By: Owner
Plotted: 12/12/2025 10:41 AM
Drawing Path: Z:\2025\101 Well Project Chem Feed Building Flowery Branch, GA\DRAWINGS\TE\25-101 PLUMBING.dwg

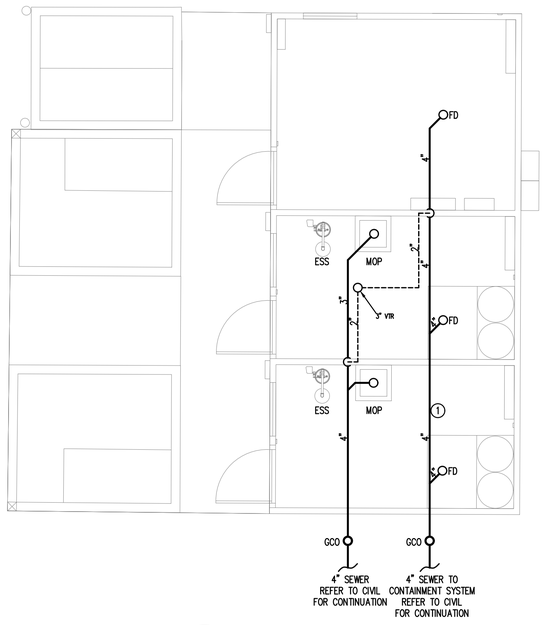

1 PLUMBING PLAN - SEWER
SCALE: 1/4"=1'-0"

KEY NOTES(THIS SHEET ONLY):

1. CONTRACTOR SHALL AVOID ALL HELICAL PILES AND FOOTERS FOR UNDERGROUND PLUMBING. TYPICAL FOR ALL UNDERGROUND PLUMBING.
2. DOMESTIC WATER LINES SHALL BE AFFIXED TO WALL OR HUNG FROM CEILING. TYPICAL FOR ALL PLUMBING PIPES.

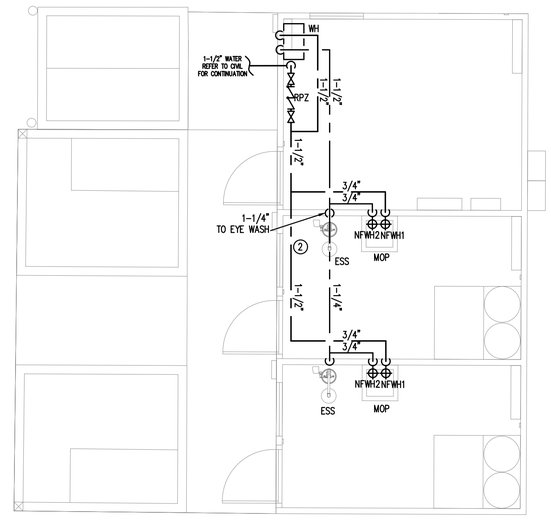

2 PLUMBING PLAN - WATER
SCALE: 1/4"=1'-0"

Last Saved By: Owner
Plotted: 12/12/2025 10:41 AM
Drawing Path: Z:\2025\101 Well Project Chem Feed Building Flowery Branch, GA\DRAWINGS\TE\25-101 PLUMBING.dwg

ESG ENGINEERING

GROUNDWATER WELLS #4 & #5

FOR THE

CITY OF FLOWERY BRANCH

REVISIONS

NO.	DESCRIPTION	DATE
2	ADDENDUM 2	

CONFORMED SET

GEORGIA REGISTERED PROFESSIONAL ENGINEER KRUNAL M PATEL

DRAWN BY: KMP
CHECKED BY: KMP
DATE:
SCALE:

CONTENT:

PLUMBING PLANS

SHEET NO:

P1.0

TOTAL ENGINEERS
169 New Street, Macon, GA 31201
(478)741-4632 - T.E. project # 25-101
www.totalengineers.com
GA COA NO # PEF009195 EXP: 06/30/2026

ADDENDUM #1
December 9, 2025

PROJECT: ***Groundwater Wells #4 & #5***

OWNER: City of Flowery Branch

BID DATE: Thursday, December 18, 2025 at 2:00 P.M.

The Bidder is hereby provided the following information:

1. **MISCELLANOUS INFORMATION**

   a. The City will require a Building Permit to be filed/applied for and obtained prior to beginning work on the chemical feed building structure. The Contractor shall be responsible for all coordinating/administration/overhead required to conduct such work. All costs associated with such work should be included under the line item of the Contractor's choosing in the Bid Form.

   b. Henderson Well pump to be Grundfos 300S250-6 (Product Name), 14B73506 (Product #), 3" NPT discharge, 6" Motor 3x440/460/480 V, 60 Hz.

2. **CONTRACT DOCUMENTS, SECTION 00410 – BID FORM**

   a. A new Bid Form has been issued – see attached.

3. **TECHNICAL SPECIFICATIONS, SECTION 01020 – ALLOWANCES**

   a. A new Section 01020 – Allowances has been issued – see attached.

4. **TECHNICAL SPECIFICATIONS, SECTION 01025 – MEASUREMENT & PAYMENT**

   a. A new Section 01025 – Measurement & Payment has been issued – see attached.

5. **REVISED CONSTRUCTION PLANS (SEE ATTACHED)**

   a. C0.0 – Cover Sheet
   b. C0.1 – General Notes
   c. C1.0 – Existing Conditions & Demolition Plan
   d. C2.0 – Site Plan
   e. C2.1 – Building Piping Plan

f. C2.2 – Building Detail Plan
g. C3.0 – Grading Plan
h. C4.0 – Utility Plan
i. C4.1 – Water Main Extension Plan
j. C5.0 & C5.2 – Building Sections
k. C5.3 – Utility Profile
l. C6.0 – Hydrology Plan
m. C7.0 & C7.1 – ESC Details
n. C8.0 – C8.5 – ESC Plan Sheets
o. C9.3 – Construction Details

6. CONSTRUCTION PLANS, SHEET L1.0

a. A Landscaping Plan sheet has been added – see attached.

7. CONSTRUCTION PLANS, SHEET S1

a. A Structural Plan sheet has been added – see attached.

b. Contractor shall include all costs associated with construction of the building foundation under the line item in the Bid Form for "Groundwater Wells #4 & #5 Improvements Complete", including but not limited to concrete/steel reinforcement work, grade beams, procuring helical pile engineer & obtaining stamped pile design drawings, helical pile foundation installation/construction, and all other work required for a complete and functional project as shown and described in the Construction Plans, Specifications, and Addenda.

All bidders shall acknowledge receipt of all addenda issued where indicated on the bid sheets. (Section 00410 – Bid Form, Page 2)

ATTENTION

ALL BIDDERS SHALL ACKNOWLEDGE RECEIPT OF ALL ADDENDA ISSUED WHERE INDICATED ON THE BID SHEETS. (SECTION 00410 – BID FORM, PAGE 2)

BIDDERS ARE MADE AWARE THAT IT IS THEIR RESPONSIBILITY TO VERIFY THAT ANY AND ALL ADDENDA HAVE BEEN RECEIVED PRIOR TO THE SUBMISSION OF THEIR BID. IN THE EVENT ANY BIDDER FAILS TO ACKNOWLEDGE RECEIPT OF ANY SUCH ADDENDA IN THE SPACE PROVIDED ON THE BID FORM, THEIR BID WILL BE CONSIDERED NONRESPONSIVE.

END ADDENDUM

SECTION 00410
BID FORM

PROJECT IDENTIFICATION:

Groundwater Wells #4 & #5

CONTRACT IDENTIFICATION AND NUMBER:

F0002.018

THIS BID IS SUBMITTED TO:

City of Flowery Branch
5410 Pine Street
Flowery Branch, GA 30542

THIS BID IS SUBMITTED FROM:

Bidder: _____

Address: _____

_____

Phone: _____

State of Georgia Business License No.: _____

1. The undersigned Bidder proposes and agrees, if this Bid is accepted, to enter into an agreement with Owner in the form included in the Contract Documents to perform and furnish all Work as specified or indicated in the Contract Documents for the Contract Price and within the Contract Time indicated in this Bid and in accordance with the other terms and conditions of the Contract Documents.

2. Bidder accepts all of the terms and conditions of the Advertisement or Invitation to Bid and Instructions to Bidders, including without limitation those dealing with the disposition of Bid security. This Bid will remain subject to acceptance for 60 days after the day of Bid opening. Bidder will sign and submit the Agreement with the Bonds and other documents required by the Bidding Requirements within fifteen days after the date of Owner's Notice of Award.

3. In submitting this Bid, Bidder represents, as more fully set forth in the Agreement, that:

(a) Bidder has examined copies of all the Bidding Documents and of the following Addenda (receipt of all which is hereby acknowledged):

Date	Addendum Number

(b) Bidder has familiarized itself with the nature and extent of the Contract Documents, Work, site, locality, and all local conditions and Laws and Regulations that in any manner may affect cost, progress, performance or furnishing of the Work.

(c) Bidder has studied carefully all reports and drawings of subsurface conditions and drawings of physical conditions which are identified in the Supplementary Conditions as provided in Paragraph 4.2 of the General Conditions, and accepts the determination set forth in Paragraph 4.2.1 of the Supplementary Conditions of the extent of the technical data contained in such reports and drawings upon which Bidder is entitled to rely.

(d) Bidder has obtained and carefully studied (or assumes responsibility for obtaining and carefully studying) all such examinations, investigations, explorations, tests and studies (in addition to or to supplement those referred to in (c) above) which pertain to the subsurface or physical conditions at the site or otherwise may affect the cost, progress, performance or furnishing of the Work as Bidder considers necessary for the performance or furnishing of the Work at the Contract Price, within the Contract Time and in accordance with the other terms and conditions of the Contract Documents, including specifically the provisions of Paragraph 4.2 of the General Conditions; and no additional examinations, investigations, explorations, tests, reports or similar information or data are or will be required by Bidder for such purposes.

(e) Bidder has reviewed and checked all information and data shown or indicated on the Contract Documents with respect to existing Underground Facilities at or contiguous to the site and assumes responsibility for the accurate location of

said Underground Facilities. No additional examinations, investigations, explorations, tests, reports or similar information or data in respect of said Underground Facilities are or will be required by Bidder in order to perform and furnish the Work at the Contract Price, within the Contract Time and in accordance with the other terms and conditions of the Contract Documents, including specifically the provisions of Paragraph 4.3 of the General Conditions.

(f) Bidder has correlated the results of all such observations, examinations, investigations, explorations, tests, reports and studies with the terms and conditions of the Contract Documents.

Bidder has given Engineer written notice of all conflicts, errors or discrepancies that it has discovered in the Contract Documents and the written resolution thereof by Engineer is acceptable to Bidder.

(g) This Bid is genuine and not made in the interest of or on behalf of any undisclosed person, firm or corporation and is not submitted in conformity with an agreement or rules of any group, association, organization or corporation; Bidder has not directly or indirectly induced or solicited any other corporation to refrain from bidding; and Bidder has not sought by collusion to obtain for itself any advantage over any other Bidder or over Owner.

(h) Bidder agrees to commence work under this Agreement on or before a date to be specified in a written "Notice to Proceed" of the Owner.

(i) Bidder accepts the provisions of the Agreement as to liquidated damages in the event of failure to complete the Work on time.

4. Bidder will complete the Work in accordance with the Contract Documents for the following price(s):

The Contractor is directed to Section 01025 “Measurement and Payment” for the methods and limits for payment to the Contractor for the pay items listed below:

(A) BASE BID: Groundwater Wells #4 & #5

BID FORM BEGINS ON PAGE 4

BID FORM					
ITEM NO	QTY	UNIT	DESCRIPTION	UNIT PRICE	TOTAL PRICE
1	80	CY	Rock Removal - Base	$ 75.00	$ 6,000.00
2	80	CY	Rock Removal - Premium		
3	1	LS	Clearing & Grubbing		
4	1	LS	Demolition		
5	1	LS	Groundwater Wells #4 & #5 Improvements Complete (see Section 01025 for limits and extents of payment under this line item)		
6	1	LS	Diesel Generator Installation		
7	1	EA	3-Way Fire Hydrant Assembly		
8	1	EA	8” Gate Valve w/ Box & Cover		
9	50	LF	4" RJ DIP Water Main - Open Cut		
10	70	LF	4" RJ DIP Water Main - Horizontal Directional Drill		
11	1,580	LF	8" RJ DIP Water Main - Open Cut Cross-Country		
12	45	LF	8" RJ DIP Water Main - Open Cut Roads		
13	145	LF	8" DR-11 (DIPS) HDPE Water Main - Horizontal Directional Drill		
14	1	EA	2" Tapping Sleeve & Valve (incl. Valve Box & Cover)		
15	1	EA	6" Tapping Sleeve & Valve (incl. Valve Box & Cover)		
16	1	EA	Cut, Cap, & Abandon Ex. 2" Water Line		
17	5	EA	Longside Water Service Transfer		
18	1	LS	Traffic Control		
19	1	LS	Erosion & Sediment Control Complete		
20	1	LS	Landscaping Complete		

21	1	LS	Electrical Service Allowance	$ 40,000.00	$ 40,000.00
22	1	LS	Groundwater Wells #4 & #5 Rehabilitation Allowance	$ 115,000.00	$ 115,000.00
23	1	LS	Supplemental Work Allowance (SWA)	$ 100,000.00	$ 100,000.00
				TOTAL BASE BID AMOUNT:	

Bidder agrees to furnish all labor, materials, and equipment necessary to construct the **Groundwater Wells #4 & #5** for the City of Flowery Branch for the sum of

_____Dollars

($_____).

6. Bidder agrees that the Work will be substantially complete and ready for final payment in accordance with the completion time/dates provided in the Contract and any Addenda.

7. Bidder accepts the provisions of the Agreement as to liquidated damages in the event of failure to complete the Work within the times specified in the Agreement.

8. The following documents are attached to and made a condition of this Bid:
   a. Required Bid Security in the form of 5% of the Bid Total Price.

9. The undersigned further agrees that in case of failure on his part to execute the said contract and the Bond within fifteen (15) consecutive calendar days after written notice being given of the award of the contract, the check or bid bond accompanying this bid, and the monies payable thereon shall be paid into the funds of the Owner as liquidated damages for such failure, otherwise, the check or bid bond accompanying this proposal shall be returned to the undersigned.

10. Communications concerning this Bid shall be addressed to:
    ESG Engineering, LLC
    6400 Peake Rd
    Macon, GA 31210
    Attn: Rachael Crowell
    rcrowell@esgengineering.com

11. Terms used in this Bid which are defined in the General Conditions or Instructions to Bidders will have the meanings indicated in the General Conditions or Instructions to Bidders.

SUBMITTED on _____, 20____.

BIDDER: _____

BY: _____

TITLE: _____

STATE CONTRACTOR
LICENSE NO. _____

ADDRESS: _____

_____

_____

PHONE: _____

Seal: (if bid by a Corporation)

END OF SECTION

SECTION 01020
ALLOWANCES

PART 1 – GENERAL

A. The Contractor shall include in his bid proposal the allowances stated herein. The final amount of any allowance item listed herein shall be adjusted accordingly by change order to reflect actual cost.

PART 2 – PRODUCTS

A. The Contractor shall allow the sum indicated in the Bid Form for Supplemental Work Allowance (SWA). SWA shall be utilized to incorporate cost changes for any additional authorized work into the scope of work up to the amount in the Bid Form. Contract change orders shall be enforced for contract changes over and above this amount. These SWA's shall authorize the Contractor to perform additions to the work, but the Contractor shall perform no work until written authorization has been delivered to the Contractor by the Owner/Engineer. Contractor should not expect that any SWA's will be issued; SWA's shall be issued at the discretion of the Owner only.

The value of any work covered by a SWA shall be determined in one of the following ways:

1. Where the work involved is covered by unit prices contained in the Contract Documents, by application of unit prices to the quantities of the item involved (subject to the provisions of the General Conditions).

2. By mutual acceptance of a lump sum by Contractor and the Owner.

3. On the basis of the cost of the work plus a Contractor's Fee for overhead and profit. This basis shall be as established for Change Orders in General Conditions.

B. The Contractor shall allow the sum indicated in the Bid Form for Electrical Service Allowance. The Electrical Service Allowance shall be utilized to reflect the actual cost of installation/establishment of utility power at the site, including any fees associated with establishing service. Georgia Power will be responsible for bringing power to the site and establishing a metered service. Should the Contractor require any overhead or profit for allowing such a sum within his/her bid, that amount should be added into the line item of their choosing. Any additional cost associated with coordinating the work with Georgia Power shall be included under the line item

of the Contractor's choosing.

C. The Contractor shall allow the sum indicated in the Bid Form for Groundwater Wells #4 & #5 Rehabilitation Allowance. The Groundwater Wells #4 & #5 Rehabilitation Allowance shall be utilized to engage the services of a hydrogeologist to provide testing oversight/inspection and to prepare and submit final water quality/pump test report for each well; allowance shall also be used to engage a laboratory and sub-contractor(s) in conjunction with hydrogeologist to provide sediment removal, air burst cleaning, post-cleaning CCTV, 72-hr pump test, data reporting/record keeping, water quality laboratory testing, and all associated and ancillary work required per Spec. Section 80001. Should the Contractor require any overhead or profit for allowing such a sum within his/her bid, that amount should be added into the line item of their choosing. Any additional cost associated with coordinating the work shall be included under the line item of the Contractor's choosing.

PART 3 – EXECUTION

A. Amounts stated shall include all taxes, coordination and handling that may be required to provide the equipment to the owner. Owner may choose to delay the purchase of equipment to the end of the Contract.

END OF SECTION

SECTION 01025
MEASUREMENT AND PAYMENT

PART 1 – GENERAL

1.01 SCOPE OF WORK

A. This Section describes the methods by which measurement will be made of the quantities for which payment will be made for the Project.

B. The Bid lists each item of the Project for which payment will be made. No payment will be made for any items other than those listed in the Bid.

C. Required items of work and incidentals necessary for the satisfactory completion of the work which are not specifically listed in the Bid, and which are not specified in this Section to be measured or to be included in one of the items listed in the Bid, shall be considered as incidental to the work and whose cost shall be included in the item of the Bidder's choice. All costs thereof, including Contractor's overhead costs and profit, shall be considered as included in the lump sum or unit prices bid for the various Bid items. The Contractor shall prepare the Bid accordingly.

D. Work includes furnishing all labor, equipment, tools and materials, which are not furnished by the Owner and performing all operations required to complete the work satisfactorily, in place, as specified and as indicated on the Drawings.

1.02 MEASUREMENT OF WORK

A. Measurement methods delineated in the individual specification sections complement the criteria of this section. In the event of conflict, the requirements of the individual specification section govern.

B. Work shall be measured by the Engineer or his representative with assistance from the Contractor prior to preparation of a payment request by the Contractor.

C. Unit quantities that are measured in place shall be measured as they are placed. The Contractor shall give the Engineer a minimum of two days' notice for making all required measurements.

D. Materials that must be measured as delivered shall be measured at the time of delivery by the Engineer or his representative; the Contractor shall provide sufficient advance notice so that such measurements can be made.

E. Work necessary for a complete and operational job, such as relocation of mailboxes

or fences, removal of trees, relocation of utilities, graveling / maintaining driveways and driving lanes, field engineering, clearing and grubbing, traffic control, etc., not specifically identified as a pay item shall be included in the unit price bid of the Bidder's choosing. No additional payments will be made for such activities.

1.03 ESTIMATED QUANTITIES

All estimated quantities for unit price items, stipulated in the BID FORM, or other Contract Documents, are approximate and are to be used as a basis for comparing the bids submitted for the Project. The actual amounts of work done and materials furnished under unit price items may differ from the estimated quantities. The basis of payment for work and materials will be the actual amount of work done and materials furnished. The Contractor agrees to make no claim for damages, anticipated profits or otherwise on account of any difference between the amounts of work actually furnished and the estimated amounts included in the BID FORM. The Contractor will not be paid for any work which exceeds the quantity set forth in the BID FORM without a change order issued before the work is performed unless specifically ordered in writing by the Engineer. The Contractor will provide assistance to the Engineer to check quantities and elevations when so requested.

1.04 MEASUREMENT OF QUANTITIES

A. Measurement by Weight – Concrete reinforcing steel, rolled or formed steel or other metal shapes will be measured by handbook weights. Welded assemblies will be measured by handbook or scale weight.

B. Measurement by Volume – Measured by cubic dimension using mean length, width and height or thickness.

C. Measurement by Area – Measured by square dimension using mean length and width or radius.

D. Linear Measurement – Measured by linear dimension, at the item centerline or mean chord.

E. Stipulated Sum/Price Measurement – Items measured by weight, volume, area, or linear means or combination, as appropriate, as a completed item or unit of the Work.

1.05 PROGRESS PAYMENTS

A. Progress payments shall be based on percentage of work complete for lump sum pay items and units installed for unit price pay items.

B. All items of Work not specifically listed in the Bid Schedule shall be considered incidental to the construction, and the cost of all such work and material shall be

included in the item of the Contractors choice.

C. All items listed for measurement and payment shall include all materials, labor, and equipment necessary to successfully and satisfactorily complete Work specified.

D. Payment – The Contractor will receive payment only for the items listed in the Bid Schedule of his contract, and no separate payments will be made for the work under any section of the Contract Documents except as provided for in the Bid Form. Where measurements are required to be made by the Engineer, for the payment of a pay item, the failure of the Contractor to give the adequate notification or failure of the Contractor to give the engineer assistance for the measurement shall result in the forfeiture of payment for the work or item which was not measured.

PART 2 – PRODUCTS

2.01 STORED MATERIALS

A. Partial payment shall be made for approved materials stored at the project site, provided invoices for said materials are furnished in accordance with payment request submittal and shop drawings for said materials have been approved.

PART 3 – EXECUTION

3.01 CLEARING & GRUBBING

A. Measurement: Measurement for Clearing & Grubbing shall be on a lump sum basis and shall include all clearing & grubbing required for the project site, including the wells site & along the proposed water main alignment.

B. Payment: Payment for Clearing & Grubbing shall be on the basis of the lump sum price provided in the BID FORM and includes clearing and grubbing for all areas shown in the plans where the proposed work conflicts with existing vegetation/trees, and includes all trimming, tree removal, clearing, grubbing, root raking, hauling, disposal, and all labor, materials, tools, and equipment required.

3.02 DEMOLITION

A. Measurement: Measurement for Demolition shall be on a lump sum basis.

B. Payment: Payment for Demolition shall be on the basis of the lump sum price provided in the BID FORM and includes the demolition/removal of all existing site features in conflict with the proposed improvements as shown on the Plans, and includes hauling, disposal, and all labor, materials, tools, and equipment required.

3.03 GROUNDWATER WELLS #4 & #5 IMPROVEMENTS COMPLETE

A. Measurement: Measurement for Groundwater Wells #4 & #5 Improvements

Complete shall be on a lump sum basis.

B. Payment: Payment for Groundwater Wells #4 & #5 Improvements Complete shall be on the basis of the lump sum price provided in the BID FORM. Payment shall include all ancillary labor, materials, tools, testing, hauling/transportation, mobilization, and equipment required for a complete and functional project, including but limited to:

- Site grading, including all import fill material and removal, hauling, and disposal of excess materials
- Landscaping
- Gravel access drive & well site pad (incl. Tensar geogrid & GAB)
- Concrete sidewalk/walking areas and external chemical storage areas
- Protective bollards
- Yard hydrant installation (incl. all valves, fittings, etc.)
- Asphalt parking area (incl. Tensar geogrid & GAB)
- Chain link security fencing & gates
- Two (2) Groundwater Wells construction
    - Grundfos submersible pumps
    - Cables, supports, brackets, centralizers, hardware, etc.
    - Electrical & controls improvements
    - Discharge piping, fittings, transitions/connections, valves, & well casing pipe
    - Pressure gauges
    - Well pump enclosures
    - Support slabs (incl. reinforcement, concrete, Tensar geogrid, & crushed stone)
    - All other ancillary and miscellaneous work required to install the groundwater wells in accordance with the Construction Plans and Spec. Sections 432133 & 02514
- Chemical feed building
    - Building foundation
        - Foundation installation per Structural plan
        - Pile design & stamped drawing per helical pile engineer
        - Helical pile installation
    - Prefabricated concrete structure installed per drawings
    - Interior & exterior wall and floor coating system per construction drawings
    - All Mechanical/HVAC improvements shown on the mechanical plan
    - All Electrical improvements (incl. wiring, conduits, equipment, etc.)
    - All interior/exterior lighting improvements
    - Domestic water service tap w/ meter, backflow preventer, & box

    - All plumbing fixtures/appurtenances/piping/fittings as shown in the plumbing plans
    - Discharge piping pressure gauge
    - Chemical feed system for fluoride & chlorine
        - Eight (8) Grundfos chemical feed pumps per Spec. Section 70001
        - Feed line tubing/piping, valves, fittings, saddle taps, injection quills, hardware, etc. per Section 70001
        - Raceway/chase box installation
    - Building sewer lines, cleanouts, and connection to existing san. sewer main
    - Chemical containment pallets & ramps
    - Ultrasonic flow meters
    - Flanged DI piping, fittings, & valves
    - Pipe supports
    - All pipe/conduit cores/penetrations (incl. coring, link seals, & grouting)
    - Gutters & downspouts
    - All other ancillary and miscellaneous work required to install the chemical feed building in accordance with Spec. Section 02513 & the applicable drawings
- Covered steel structure
    - Stamped engineering design plans and applicable fees
    - Foundation/footers per detail & note on Sheet C9.4
    - Steel structure/shelter installed per detail drawings
    - Gutters & downspouts
    - All other ancillary and miscellaneous work required to install the steel structure in accordance with Section 90001 and the applicable drawings (provided by Renegade)
- Isolated chemical spill containment system (incl. floor drains, piping, fittings, precast structures, and coatings/linings)
- All restrained joint & flanged ductile iron yard piping, fittings, & valves located up to and including the 8”x6” reducer located outside of the backflow vault (see Sheets C4.0 & C4.1)
- Riser blowoff/sampling piping
    - Tapping saddle, spigot, fittings/adaptors, etc.
    - Insulated enclosure
    - Crusher run bedding
- Exterior pipe insulation system
- All pipe coating/lining and painting
- Backflow installation
    - Double Check Detector Assembly (DCDA)
    - Pressure gauge

    - Pipe supports & blocking
    - Precast concrete vault
    - Access hatch
    - Ladder
    - Stone bedding & Tensar geogrid
    - Pipe, fittings, and valves (incl. coring, link seals, & grouting)
    - Drainage piping
- Electrical/Controls & SCADA improvements, implementation, and ancillary items not furnished & installed by the utility provider (GA Power)
- All other ancillary and miscellaneous items required to provide a complete and functional project as shown and described in the Construction Plans, Details, and Specifications.

3.04 DIESEL GENERATOR INSTALLATION

A. Measurement: Measurement for Diesel Generator Installation shall be on a lump sum basis.

B. Payment: Payment for Diesel Generator Installation shall be on the basis of the lump sum price provided in the BID FORM and shall include the cost of the generator, concrete support slab, steel reinforcement, Tensar geogrid, crushed stone, grading of local area, all required electrical work/connections, transfer switch integration and all labor, materials, tools, testing, and hauling/freight required for a complete and functional installation.

3.05 FIRE HYDRANT ASSEMBLY

A. Measurement: Measurement for Fire Hydrant Assembly shall be based on the number of fire hydrants that are installed.

B. Payment: Payment for Fire Hydrant Assembly shall be on the basis of the unit price provided in the BID FORM and shall include the cost of excavation, bedding, backfill, restrained hydrant tee, restrained hydrant lead pipe, 3-way fire hydrant, fittings/couplings, restraint/blocking, and all labor, materials, tools, testing, and hauling/freight required for a complete and functional installation.

3.06 GATE VALVE

A. Measurement: Measurement for Gate Valve shall be based on the number of valves that are installed.

B. Payment: Payment for Gate Valve shall be on the basis of the unit price provided in the BID FORM for valves of various sizes and shall include the cost of the gate valve, box, stem, cover, and all labor, materials, tools, testing, freight/hauling, and

equipment required to install the gate valves where shown in the plans.

3.07 WATER MAIN – OPEN CUT

A. Measurement: Measurement for Water Main – Open Cut shall be on a per linear foot basis.

B. Payment: Payment for Water Main – Open Cut shall be on the basis of the unit price provided in the BID FORM and shall include the cost of pipe of various materials and sizes, excavation, bedding, & backfill, all adaptors/transitions/couplings, thrust blocking, restrained joint glands/gaskets, fittings (bends, tees, crosses, reducers, etc.), **connecting to existing water lines (where applicable)**, pipe cutting, and all freight/hauling, labor, materials, tools, testing, and equipment required.

3.08 WATER MAIN – HORIZONTAL DIRECTIONAL DRILL

A. Measurement: Measurement for Water Main – Horizontal Directional Drill shall be on a per linear foot basis.

B. Payment: Payment for Water Main – Horizontal Directional Drill shall be on the basis of the unit price provided in the BID FORM and shall include the cost of various sizes and materials of pipe, excavation, bedding, & backfill, pipe cutting, fusing/welding, directional drill operation, drilling fluid, excavation of launching & receiving pits, and all freight/hauling, labor, materials, tools, testing, and equipment required.

3.09 WATER MAIN – OPEN CUT ROADS

A. Measurement: Measurement for Water Main – Open Cut Roads shall be on a per linear foot basis.

B. Payment: Payment for Water Main – Open Cut Roads shall be on the basis of the unit price provided in the BID FORM and shall include the cost of pipe of various materials and sizes, excavation, bedding, & backfill, Class “A” concrete, asphalt surface course, all adaptors/transitions/couplings, thrust blocking, restrained joint glands/gaskets, fittings (bends, tees, crosses, reducers, etc.), connecting to existing water lines, pipe cutting, and all freight/hauling, labor, materials, tools, testing, and equipment required.

3.10 TAPPING SLEEVE & VALVE INSTALLATION

A. Measurement: Measurement for Tapping Sleeve & Valve Installation shall be based on the number of hot-tap connections made to existing water lines/mains.

B. Payment: Payment for Tapping Sleeve & Valve Installation shall be on the basis of the unit price provided in the BID FORM and shall include the cost of the tapping sleeve & valve assembly of various sizes, tapping/connecting to existing water mains, valve riser & box/cover, and all freight/hauling, labor, materials,

tools, testing, and equipment required.

3.11 CUT, CAP, & ABANDON WATER LINES

A. Measurement: Measurement for Cut, Cap, & Abandon Water Lines shall be on a per each basis.

B. Payment: Payment for Cut, Cap, & Abandon Water Lines shall be on the basis of the unit price provided in the BID FORM and shall include the cost of all excavations, isolating lines, pipe cutting, installation of two (2) ductile iron caps, backfill, and all freight/hauling, labor, materials, tools, testing, and equipment required.

3.12 WATER SERVICE TRANSFER

A. Measurement: Measurement for Water Service Transfer shall be on a per each basis.

B. Payment: Payment for Water Service Transfer shall be on the basis of the unit price provided in the BID FORM and shall include the cost of disconnecting the existing pipe, tapping saddle, corporation stop, installing new piping/tubing to match existing size, directional drill operation (if required), couplings/adapters, and all labor, materials, tools, testing, freight/hauling, and equipment required to transfer existing water service lines to the new main.

3.13 TRAFFIC CONTROL

A. Measurement: Measurement for Traffic Control shall be on a lump sum basis for the entire project, including the wells site and along the proposed water main alignment shown in the BID FORM.

B. Payment: Payment for Traffic Control shall be at the lump sum price provided in the BID FORM and shall include all traffic control operations, labor, materials, signage, procedures, devices, and equipment required to adhere to the latest MUTCD, GDOT, and local standards and recommendations throughout construction.

3.14 EROSION CONTROL

A. Measurement: Measurement for Erosion Control shall be on a lump sum basis for the entire project, including at the wells site and along the proposed water main alignment.

B. Payment: Payment for Erosion Control shall be on the basis of the lump sum price provided in the BID FORM and shall include all NPDES permitting, NOI filing,

inspection, sampling, record keeping, reporting, ES&PC signage, silt fence, check dams, temporary & permanent grassing, NOT filing, and all labor, materials, tools, testing, freight/hauling, and equipment required.

3.15 LANDSCAPING COMPLETE

A. Measurement: Measurement for Landscaping Complete shall be on a lump sum basis.

B. Payment: Payment for Landscaping Complete shall be on the basis of the lump sum price provided in the BID FORM and shall include the cost of providing and installing landscaping trees/shrubbery in accordance with the landscaping plan, as well as replacing/relocating any disturbed landscaping and landscaping features for the entire project site, including fencing, shrubbery, trees, planter beds, irrigation systems, specific grassing, planter beds, and all labor, materials, tools, testing, freight/hauling, and equipment required.

END OF SECTION

GROUNDWATER WELLS #4 & #5

FOR THE

CITY OF FLOWERY BRANCH

HALL COUNTY, GA

DECEMBER 2025

F0002.018

CITY COUNCIL

OLIVER McCLELLAN	MAYOR
CHRIS MUNDY	POST 1 COUNCIL MEMBER
JOSEPH MEZZANOTTE	POST 2 COUNCIL MEMBER
WILLIAM McDANIEL	POST 3 COUNCIL MEMBER
CHARLES VANDERBILT	POST 4 COUNCIL MEMBER
PETER LENA	POST 5 COUNCIL MEMBER
TONYA PARRISH	CITY MANAGER

EST 1874 FLOWERY BRANCH Always Blooming!

PROJECT CONTACTS:

1. OWNER / DEVELOPER:
   CITY OF FLOWERY BRANCH
   5410 PINE STREET
   FLOWERY BRANCH, GEORGIA 30542
   PHONE: 770-967-6371

2. PROJECT MANAGER:
   ANDREW SWICEGOOD, PE
   ESG ENGINEERING, LLC
   6400 PEAKE ROAD
   MACON, GEORGIA 31210
   PHONE: 478-718-4426
   ANDREW.SWICEGOOD@ESGENGINEERING.COM

3. 24-HOUR EROSION, SEDIMENTATION, & POLLUTION CONTROL CONTACT:
   TREY CRISP
   478-335-4612

I CERTIFY THAT THE PERMITTEE'S EROSION, SEDIMENTATION AND POLLUTION CONTROL PLAN PROVIDES FOR AN APPROPRIATE AND COMPREHENSIVE SYSTEM OF BEST MANAGEMENT PRACTICES REQUIRED BY THE GEORGIA WATER QUALITY CONTROL ACT AND THE DOCUMENT "MANUAL FOR EROSION AND SEDIMENT CONTROL IN GEORGIA" (MANUAL) PUBLISHED BY THE GEORGIA SOIL AND WATER CONSERVATION COMMISSION AS OF JANUARY 1 OF THE YEAR IN WHICH THE LAND-DISTURBING ACTIVITY WAS PERMITTED, PROVIDES FOR THE SAMPLING OF THE RECEIVING WATER(S) OR THE SAMPLING OF THE STORMWATER OUTFALLS AND THAT THE DESIGNED SYSTEM OF BEST MANAGEMENT PRACTICES AND SAMPLING METHODS IS EXPECTED TO MEET THE REQUIREMENTS CONTAINED IN THE GENERAL NPDES PERMIT NO. GAR100001.

I CERTIFY UNDER PENALTY OF LAW THAT THIS PLAN WAS PREPARED AFTER A SITE VISIT TO THE LOCATIONS DESCRIBED HEREIN BY MYSELF OR MY AUTHORIZED AGENT, UNDER MY SUPERVISION.

DELMAR S. CRISP	0000100336	OCTOBER 3, 2025
LEVEL II DESIGN PERSONNEL	LEVEL II CERTIFICATION NO.	DATE

CONSTRUCTION EXIT
LATITUDE - 34° 11' 25.36" N
LONGITUDE - 83° 55' 8.45" W

GSWCC GEORGIA SOIL AND WATER CONSERVATION COMMISSION

Delmas S Crisp III
LEVEL II CERTIFIED DESIGN PROFESSIONAL

CERTIFICATION NUMBER: 0000100336
ISSUED: 11/08/2025 EXPIRED: 11/08/2028

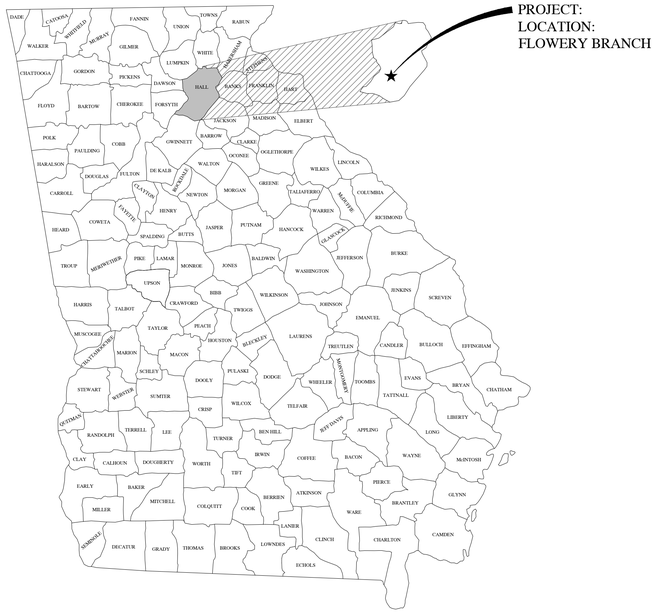

PROJECT LOCATION

INDEX TO DRAWINGS

Sheet List Table	
SHEET NUMBER	SHEET TITLE
C0.0	COVER SHEET
C0.1	GENERAL NOTES
C1.0	EXISTING CONDITIONS & DEMOLTION PLAN
C2.0	SITE PLAN
C2.1	BUILDING PIPING PLAN
C2.2	BUILDING DETAIL PLAN
C3.0	GRADING & DRAINAGE PLAN
C4.0	UTILITY PLAN
C4.1	WATER MAIN EXTENSION PLAN
C5.0 - C5.2	BUILDING ELEVATIONS
C5.3	SANITARY SEWER PROFILES
C6.0	HYDROLOGY PLAN
C7.0 - C7.2	EROSION, SEDIMENTATION, & POLLUTION CONTROL DETAILS
C8.0 - C8.2	EROSION, SEDIMENTATION, & POLLUTION CONTROL PLAN (WELL SITE IMPROVEMENTS)
C8.3 - C8.5	EROSION, SEDIMENTATION, & POLLUTION CONTROL PLAN (WATER MAIN EXTENSION)
C9.0 - C9.5	CONSTRUCTION DETAILS
L1.0	LANDSCAPING PLAN
S1	STRUCTURAL PLAN
MX.X	MECHANICAL PLAN SHEETS (TO BE ISSUED VIA ADDENDUM)
EX.X	ELECTRICAL PLAN SHEETS (TO BE ISSUED VIA ADDENDUM)
PX.X	PLUMBING PLAN SHEETS (TO BE ISSUED VIA ADDENDUM)

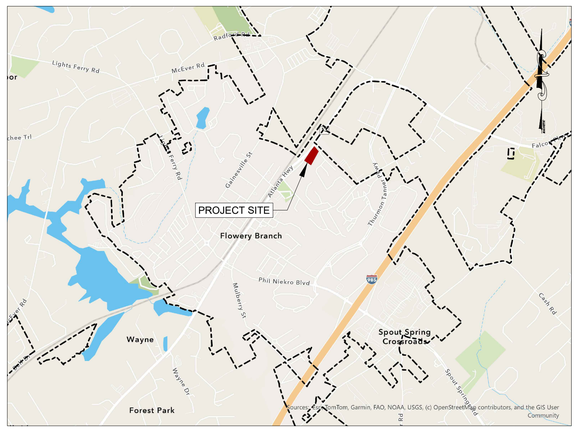

PROJECT VICINITY MAP
N.T.S.

ESG ENGINEERING
6400 Peake Rd
Macon, GA 31210
Ph: (478) 474-4996
Fax: (478) 474-5045

GROUNDWATER WELLS #4 & #5
FOR THE
CITY OF FLOWERY BRANCH

REVISIONS

NO.	DESCRIPTION	DATE
1	ESPC SHEETS	11-7-25
2	BID SET OF PLANS	12-1-25
3	REVISED WITH CITY COMMENTS	12-5-25
4	ADDENDUM #1	12-8-25

BID SET

GEORGIA REGISTERED No. PE046341 PROFESSIONAL ENGINEER ANDREW D SWICEGOOD

DRAWN BY: DSC
CHECKED BY: ADS
DATE: DEC 2025
SCALE: N.T.S.

CONTENT:
COVER SHEET

SHEET NO: 2 3 4
C0.0

UTILITY PROVIDERS	
POWER	CITY OF FLOWERY BRANCH - 770-967-6371
	GEORGIA POWER - 888-660-5890
NATURAL GAS	ATLANTA GAS LIGHT - 800-427-5463
	GAS SOUTH - 877-472-4932
	GEORGIA NATURAL GAS - 800-427-5463
	SCANA ENERGY - 877-467-2262
WATER SERVICE & SANITARY SEWER	CITY OF FLOWERY BRANCH - PETER WOERNER - 706-982-0751
	GAINESVILLE WATER - 770-535-6878
TELECOMMUNICATIONS	EARTHLINK FIBER - 833-906-6020
	AT&T - 877-516-2469
	CHARTER (SPECTRUM) - 770-628-5918
	CENTURY LINK (LUMEN) - 877-453-8353
	COMCAST (XFINITY) - 770-628-5960

PROPOSED LINE LEGEND	PROPOSED SYMBOL LEGEND
PROPERTY LINE	LIGHT POLE / POWER POLE (LP) (PP)
RIGHT-OF-WAY	GAS METER / WATER METER (GM) (WM)
SETBACK / BUFFER	GAS VALVE / WATER VALVE (GV) (WV)
EASEMENT	SANITARY/STORM CLEANOUT (SS CO) (ST CO)
LIMITS OF DISTURBANCE	SANITARY/STORM MANHOLE (SS) (ST)
SURFACE MAJOR CONTOUR	BACK FLOW PREVENTION (RPZ) (DDCV)
SURFACE MINOR CONTOUR	FIRE DEPARTMENT CONNECTION / POST INDICATOR VALVE (FDC) (PIV)
SWALE / DITCH	FIRE HYDRANT / HOSE BIB (HYD) (HB)
SILT FENCE	WELL HEAD (W)
OVERHEAD ELECTRIC	STORM GRATE/COMBO INLET (2'x2') (2'x3')
UNDERGROUND POWER	STORM CURB INLET
NATURAL GAS	FLARED/SAFETY END SECTION
SAN. FORCE MAIN	STRAIGHT/WINGED HEADWALL
SANITARY LATERAL	OUTLET CONTROL STRUCTURE
SAN. SEWER GRAVITY MAIN	
TELECOMMUNICATIONS	
WATER SERVICE	
WATER MAIN	
STORM SEWER	

SITE INFORMATION	
OWNER / DEVELOPER	CITY OF FLOWERY BRANCH 5410 PINE STREET FLOWERY BRANCH, GA, 30542 770-967-6371 EXT. 106 tonya@flowerybranchga.com
PROJECT ADDRESS	4745 ATLANTA HWY FLOWERY BRANCH, GA, 30542
TAX MAP & PARCEL NUMBER	08098 001001 THRU 08098 001004
ZONING / LAND USE	H-B
PROJECT AREA	2.14 ACRES
DISTURBED AREA	0.92 ACRES
BUILDING AREA	400 SQUARE FEET
IMPERVIOUS AREA	0.032 ACRES
PROPOSED USE	GROUNDWATER WELL RESTORATION

2

SITE INFORMATION	
PROJECT ADDRESS	4745 ATLANTA HWY
PARCEL NUMBER	08098 001001 THRU 08098 001004
PARCEL ZONING	H-B
PROJECT AREA	2.14 ACRES
BUILDING SETBACK	
FRONT	NONE
REAR	30'
SIDE	10'
LANDSCAPING BUFFER	
FRONT	10'
REAR	30'
SIDE	NONE

GENERAL NOTES

1. CONTRACTOR SHALL ADHERE TO ALL LOCAL, STATE, AND FEDERAL REGULATIONS.
2. CONTRACTOR SHALL COORDINATE ALL CONSTRUCTION WITH THE OWNER.
3. THE CONTRACTOR SHALL PROVIDE 72 HOUR NOTICE TO THE UTILITIES PROTECTION CENTER PRIOR TO CONSTRUCTION COMMENCEMENT OR EXCAVATION.
4. THE CONTRACTOR IS SPECIFICALLY CAUTIONED THAT THE LOCATIONS AND/OR ELEVATIONS OF EXISTING INFRASTRUCTURE AS SHOWN ON THESE PLANS ARE BASED ON EXISTING RECORDS AND WHERE POSSIBLE, MEASUREMENTS TAKEN IN THE FIELD. THIS INFORMATION IS NOT TO BE RELIED ON AS BEING EXACT OR COMPLETE. IT SHALL BE THE RESPONSIBILITY OF THE CONTRACTOR TO EVALUATE ALL EXISTING INFRASTRUCTURE WHICH MAY CONFLICT WITH THE PROPOSED IMPROVEMENTS SHOWN ON THE PLANS AND COORDINATE WITH THE ENGINEER FOR ADJUSTMENT OF THE WORK AS NECESSARY TO MAINTAIN ADEQUATE SEPARATION SHOULD A CONFLICT ARISE. CONTRACTOR SHALL FIELD-VERIFY (BY POT HOLING) ALL EXISTING UTILITIES PRIOR TO AND DURING CONSTRUCTION.
5. ALL IN-PLACE ITEMS WILL BE PROTECTED BY THE CONTRACTOR DURING CONSTRUCTION. ANY DAMAGES WILL BE REPAIRED TO THE RESPECTIVE OWNER'S SATISFACTION BY THE CONTRACTOR AT HIS/HER EXPENSE. CONTRACTOR SHALL MATCH EXISTING GRASS WHEN REPAIRING DISTURBED AREAS.
6. CONTRACTOR SHALL PROTECT ALL EXISTING UTILITIES. CONTRACTOR SHALL, AT HIS OWN EXPENSE, REPAIR OR REPLACE ANY DAMAGED UTILITIES TO THE RESPECTIVE OWNER'S SATISFACTION.
7. THE CONTRACTOR SHALL BE RESPONSIBLE FOR THE DESIGN, PERMITTING, AND IMPLEMENTATION OF ALL SHEETING, SHORING, BRACING, DE-WATERING, AND SPECIAL EXCAVATION MEASURES REQUIRED TO MEET OSHA, FEDERAL, STATE, AND LOCAL REGULATIONS PURSUANT TO THE INSTALLATION OF THE WORK INDICATED ON THESE DRAWINGS, AS WELL AS SUBSEQUENT WORK AGREED TO BETWEEN THE OWNER AND CONTRACTOR. THE OWNER AND THE DESIGN ENGINEER ACCEPT NO RESPONSIBILITY FOR THE DESIGN(S) TO INSTALL SAID ITEMS.
8. ALL CONSTRUCTION STAKING SHALL BE BY THE CONTRACTOR AT HIS EXPENSE.
9. CONTRACTOR SHALL NOT DISTURB AREAS OUTSIDE OF THE PROJECT SITE/RIGHT OF WAY WITHOUT THE NECESSARY PERMITS/EASEMENTS.
10. EXISTING ROAD SHOULDERS SHALL BE BACKFILLED AND GRASSED. ANY DISTURBED SIDEWALK OR CURB & GUTTER SHALL BE REPAIRED TO MATCH EXISTING.
11. CONTRACTOR SHALL REPLACE ALL DISTURBED TRAFFIC STRIPING, PAVEMENT MARKINGS, MAILBOXES, AND SIGNAGE TO MATCH EXISTING.
12. NO WORK SHALL BEGIN ON THIS PROJECT WITHOUT AT LEAST 24 HOURS ADVANCE NOTIFICATION TO THE OWNER AND THE ENGINEER. IN ADDITION, NO WORK IS TO TAKE PLACE WITHOUT AN APPROVED SET OF PLANS AND SPECIFICATIONS ON THE JOB SITE. WORK IS TO BE COORDINATED WITH ALL OTHER OPERATIONS ACTIVITIES.
13. IT IS THE RESPONSIBILITY OF THE CONTRACTOR TO ENSURE THAT ALL REQUIRED PERMITS ARE OBTAINED AND IN HAND PRIOR TO THE COMMENCEMENT OF CONSTRUCTION.
14. THE CONTRACTOR SHALL BE RESPONSIBLE FOR FURNISHING ALL FILL MATERIAL. FILL MATERIAL SHALL BE CLEAN AND FREE OF ALL DEBRIS AND ORGANIC MATERIAL.
15. THE CONTRACTOR SHALL MAKE HIS OWN DETERMINATION OF ALL SURFACE AND SUBSURFACE CONDITIONS. THE CONTRACTOR WITH CONSULTATION FROM THE ENGINEER SHALL TOGETHER DETERMINE WHAT MATERIAL, IF ANY, IS TO BE WASTED.
16. ALL FIELD CHANGES SHALL BE AUTHORIZED BY THE OWNER IN WRITING IN ADVANCE OF THE WORK. IF CHANGES ARE MADE BY THE CONTRACTOR WITHOUT PRIOR WRITTEN CONSENT FROM THE OWNER, CONTRACTOR SHALL BEAR FULL RESPONSIBILITY FOR MAKING THE NECESSARY CHANGES TO BRING THE CONSTRUCTION INTO CONFORMANCE WITH APPROVED PLANS AND SPECIFICATIONS AT NO COST TO THE OWNER.
17. THE AREAS DISTURBED BY THE CONTRACTOR SHALL BE RESTORED TO THEIR ORIGINAL CONDITION UNLESS OTHERWISE NOTED ON THE PLANS.
18. ALL WATER UTILIZED DURING CONSTRUCTION SHALL BE METERED THROUGH A CONSTRUCTION WATER METER (OBTAINED FROM THE UTILITY OWNER) EQUIPPED WITH AN APPROVED BACKFLOW DEVICE.
19. IT SHALL BE THE RESPONSIBILITY OF THE CONTRACTOR TO FIELD VERIFY ALL PROPOSED CONSTRUCTION FOR FEASIBILITY AND FUNCTION. THE CONTRACTOR SHALL IMMEDIATELY NOTIFY THE ENGINEER OF ANY DISCREPANCIES OR WARRANTED CONCERNS PERTAINING TO DESIGN AND CONSTRUCTION.
20. CONSTRUCTION LAYDOWN AREAS AND STAGING TO BE AT LOCATIONS APPROVED OF BY THE OWNER.
21. THE CONTRACTOR SHALL PLAN, COORDINATE, AND EXECUTE THE WORK SUCH THAT DISRUPTION TO PERSONAL PROPERTY AND BUSINESS IS HELD TO A PRACTICAL MINIMUM.
22. All CONSTRUCTION AREAS ABUTTING LAWNS AND YARDS OF RESIDENTIAL OR COMMERCIAL PROPERTY SHALL BE RESTORED PROMPTLY. BACKFILLING OF UNDERGROUND FACILITIES, DITCHES, AND DISTURBED AREAS SHALL BE ACCOMPLISHED ON A DAILY BASIS.
23. HANDWORK, INCLUDING RAKING AND SMOOTHING, SHALL BE REQUIRED TO ENSURE THAT THE REMOVAL OF ROOTS, STICKS, ROCKS, AND OTHER DEBRIS IS ACCOMPLISHED IN ORDER TO PROVIDE A NEAT AND PLEASING APPEARANCE. GRASSING, WHEN IN SEASON, SHALL IMMEDIATELY FOLLOW IN ORDER TO ESTABLISH PERMANENT COVER AT THE EARLIEST DATE. IF GRASSING IS NOT IN SEASON, PROPER EROSION CONTROL SHALL BE INSTALLED AND MAINTAINED.
24. THE CONTRACTOR SHALL BE ORDERED TO STOP ALL WORK BY THE ENGINEER WHEN RESTORATION AND CLEANUP ARE UNSATISFACTORY, AND TO REQUIRE APPROPRIATE REMEDIAL MEASURES.

AS-BUILT RECORD DRAWINGS

1. AFTER THE FINAL INSPECTION HAS BEEN PERFORMED AND ALL ITEMS ARE SATISFACTORY TO THE CITY, AS-BUILTS SHALL BE SUBMITTED TO THE ENGINEER ALONG WITH A LETTER OF TRANSMITTAL. ACCEPTABLE SUBMITTALS WILL BE APPROVED IN WRITING. SUBMITTALS REQUIRING CORRECTIONS BEFORE BEING ACCEPTABLE WILL BE SO NOTED. AS-BUILTS MUST BE RESUBMITTED FOR REVIEW AND APPROVAL PRIOR TO THE LETTER OF ACCEPTANCE BEING ISSUED BY THE ENGINEER(S).
2. CONTRACTOR SHALL MAINTAIN FIELD "AS-BUILT" DRAWINGS AND SHALL MEASURE AND SHOW LOCATIONS OF ALL PROPOSED INFRASTRUCTURE. AS-BUILT DRAWINGS SHALL PROVIDE RIM AND INVERT ELEVATIONS OF ALL MANHOLES & PIPES.
3. CONTRACTOR SHALL PROVIDE THE ENGINEER WITH DIGITAL AND PAPER AS-BUILT RECORD DRAWINGS OF THE CONSTRUCTED IMPROVEMENTS.

TRAFFIC CONTROL NOTES

1. CONTRACTOR SHALL BE RESPONSIBLE FOR ALL TRAFFIC CONTROL, INCLUDING DEVICES, MATERIALS, PERSONNEL, PROCEDURES, OPERATIONS, AND COORDINATION. ALL TRAFFIC CONTROL SHALL BE IN ACCORDANCE WITH THE *MANUAL OF UNIFORM TRAFFIC CONTROL DEVICES (MUTCD), CURRENT EDITION* AND ALL GDOT AND LOCAL REQUIREMENTS.
2. ACCESS TO ALL ADJACENT PROPERTIES SHALL BE MAINTAINED AT ALL TIMES.
3. CONTRACTOR SHALL NOT LEAVE ANY OPEN TRENCHES OVER NIGHT. ALL TRENCHES SHALL BE BACKFILLED OR PLATED DAILY.

EROSION & SEDIMENTATION CONTROL NOTES

1. ALL EROSION AND SEDIMENT CONTROL MEASURES SHALL BE THE RESPONSIBILITY OF THE CONTRACTOR.
2. CONTRACTOR SHALL HAVE SOIL EROSION CONTROL MEASURES IN PLACE PRIOR TO THE START OF CONSTRUCTION ACTIVITIES.
3. CONTRACTOR SHALL PLACE TEMPORARY AND/OR PERMANENT GRASSING ON ALL DISTURBED PERVIOUS AREAS. CONTRACTOR SHALL INSTALL SINGLE-ROW ("TYPE A") SILT FENCE ALONG THE DOWNSTREAM EDGE OF ALL DISTURBED PERVIOUS AREAS AND INSTALL DOUBLE-ROW ("TYPE C") SILT FENCE ADJACENT TO STREAM BUFFERS. CONTRACTOR SHALL INSTALL CHECK DAMS AT 2' VERTICAL INTERVALS WHERE PROPOSED CONSTRUCTION DISTURBS OR PARALLELS ROADSIDE DRAINAGE DITCHES. 2
4. CONTRACTOR SHALL PROTECT ALL EXISTING & PROPOSED STORM STRUCTURES WITHIN THE PROJECT AREA WITH INLET PROTECTION THROUGHOUT CONSTRUCTION.

PROJECT SITE NOTES:

1. THE EXISTING CONDITIONS SURVEY WAS PROVIDED BY EMC ENGINEERING SERVICES, IMC. AND DATED 03/04/2025.
   A COPY CAN BE PROVIDED UPON WRITTEN REQUEST.
2. REPORTS:
   A. TERRACON PERFORMED A GEOTECHNICAL INVESTIGATION, AND THE SUBSEQUENT REPORT IS PROVIDED IN THE CONSTRUCTION DOCUMENTS AS APPENDIX A.
   B. NO ENVIRONMENTAL ASSESSMENT HAS BEEN PERFORMED FOR THE PROJECT AREA. THE CONTRACTOR SHALL NOTIFY THE ENGINEER WITHIN 24 HOURS OF ANY ENVIRONMENTAL CONCERN ENCOUNTERED WITHIN THE PROJECT AREA.
   C. NO ACM SURVEY HAS BEEN PERFORMED. THE CONTRACTOR SHALL TAKE CARE WHEN HANDLING ANY MATERIAL SUSPECTED TO CONTAIN ASBESTOS. THE CONTRACTOR SHALL PROPERLY DISPOSE OF ALL MATERIAL CONTAINING ASBESTOS.
3. THE PROJECT GENERALLY INCLUDES THE CONSTRUCTION OF A WELL HOUSE BUILDING AND WATER LINE EXTENSION OF TWO PREVIOUSLY OWNED STATE WELLS THAT THE CITY OF FLOWERY BRANCH PURCHASED. THE PROJECT CONSISTS OF MAKING THE WELLS A SUPPORT TO THE CURRENT DRINKING WATER SYSTEM. THE PROJECT WILL INVOLVE TRAFFIC CONTROL, EROSION CONTROL, AND ANY ANCILLARY ITEMS NECESSARY FOR PROJECT COMPLETION. PORTIONS OF THE WORK WILL TAKE PLACE WITHIN GDOT RIGHT-OF-WAY WHERE PERMITS HAVE BEEN APPROVED.
4. THE PROPOSED DEVELOPMENTS ARE LOCATED AT THE INTERSECTION OF: 4745 ATLANTA HIGHWAY AT THE NORTH END OF E RAILROAD AVENUE INTERSECTION.
5. HORIZONTAL DATA SHOWN HEREON IS BASED ON NAD83 GEORGIA STATE PLANES, WEST ZONE, US FOOT. VERTICAL DATA SHOWN HEREON IS BASED ON NAVD88 (1988).
6. THE TOTAL PROJECT SITE FOR THE MULTI-USE FACILITY IS 2.14 ACRES WITH A DISTURBED AREA OF 0.92 ACRES.
7. WETLANDS HAVE BEEN IDENTIFIED NEAR THE PROJECT AREA.
8. STATE WATERS HAVE BEEN IDENTIFIED ON OR WITHIN 200' FEET OF THE PROJECT AREA.
9. THE RECEIVING WATERS FOR THE PROJECT HAS BEEN IDENTIFIED AS LAKE LANIER.
10. IMPAIRED WATERS HAVE BEEN IDENTIFIED WITHIN 1 MILE OF THE PROJECT AREA FOR THE PROJECT. THE IMPAIRED WATER IS IDENTIFIED AS FLOWERY BRANCH; A TRIBUTARY OF LAKE LANIER.
11. THE PROPERTIES SHOWN HEREON ARE LOCATED IN FLOOD ZONE X AS PER FLOOD INSURANCE RATE MAP FOR FLOWERY BRANCH, HALL COUNTY, GA AND SHOWN ON MAP NO. 13139C0283G WITH AN EFFECTIVE DATE OF APRIL 4, 2018. FLOOD ZONE X DENOTES AREA OF MINIMAL FLOOD CONCERNS.

ESG ENGINEERING
6400 Peake Rd
Macon, GA 31210
Ph: (478) 474-4996
Fax: (478) 474-5045

GROUNDWATER WELLS #4 & #5

FOR THE CITY OF FLOWERY BRANCH

REVISIONS

NO.	DESCRIPTION	DATE
1	EPSC SHEETS	11-7-25
2	BID SET OF PLANS	12-1-25
3	REVISED WITH CITY COMMENTS	12-5-25

BID SET

GEORGIA REGISTERED No. PE046341 PROFESSIONAL ENGINEER ANDREW D SWICEGOOD

DRAWN BY: DSC
CHECKED BY: ADS
DATE: OCT 2025
SCALE: N.T.S.

CONTENT:

GENERAL NOTES

SHEET NO: 2
C0.1

*DISTURBED AREA CALCULATIONS:

PROJECT SITE: 2.14 AC
TOTAL DISTURBED AREA: 1.06 AC

DISTURBED AREA (OFF SITE): 0.14 AC
DISTURBED AREA (ON SITE): 0.92 AC
DISTURBED AREA = 0.92 AC / 2.14 AC = 43% OF PROJECT SITE
< 50% GOOD

IMPERVIOUS AREA = 1400 SF -> 0.032 AC / 1.06 AC = 3.0%

<50% GOOD
<15% GOOD

STATE ROUTE 13
(100' RIGHT-OF-WAY)

RAILROAD AVENUE

SAW CUT STRAIGHT EDGE ±160 LF

10' LANDSCAPING BUFFER

COORDINATE WITH GA POWER TO RELOCATE EX. GUY WIRES

RE-ESTABLISH GRAVEL DRIVE AT PROPOSED GRADE (SEE GRADING & SITE PLANS)

CLEAR, GRUB, AND MULCH SITE

DEMOLISH EX. CONC. PAD

EX. ABANDONED WELLHEAD LOCATION

DEMOLISH EX. CONC. PAD & REMOVE EX. FENCING

REMOVE APPROX. 8 TREES (TYP.)

EX. UTILITY POLE (TYP.)

10' BUILDING SETBACK

75' IMPERVIOUS BUFFER

50' LOCAL STREAM BUFFER

25' STREAM BUFFER

30' BUILDING SETBACK

EX. 20' SEWER EASEMENT

EX. 12" SAN. SEWER

EX. STREAM CENTERLINE

EX. WETLANDS (APPROX.)

VIREO DR

AREA
2.141 ACRES
PARCEL ID: 08098 001001, 08098 001002 1, 08098 001003, 08098 001004
CITY OF FLOWERY BRANCH GEORGIA
DEED BOOK 9253, PAGE 463
PLAT BOOK 876, PAGE 1

*LIMITS OF DISTURBANCE
0.92 AC (ON-SITE)
0.14 AC (OFF-SITE)
±1.06 AC (TOTAL)

PARCEL ID: 08098 01009
KOSWIRE INC.
4600 CANTRELL ROAD
FLOWERY BRANCH, GA 30542
26.72 ACRES

PARCEL ID: 08098 A000206
WATER STONE CROSSING COMMUNITY ASSOCIATION
4611 BEACON RIDGE LANE
FLOWERY BRANCH, GA 30542
15.52 ACRES

PARCEL ID: 08098A000206
WATER STONE CROSSING COMMUNITY ASSOC INC
DEED BOOK 4312, PAGE 80
PLAT BOOK 816, PAGE 154A

HATCH LEGEND:

- EXISTING ASPHALT PAVEMENT
- EXISTING CONCRETE
- EX. GRAVEL
- DEMOLITION

EXISTING CONDITIONS & DEMOLITION NOTES:

1. THE SURVEY WAS PROVIDED BY EMC ENGINEERING SERVICES, IMC. AND DATED 03/04/2025. A COPY CAN BE PROVIDED UPON WRITTEN REQUEST.
2. THE CONTRACTOR SHALL REVIEW ALL DOCUMENTS AND OBTAIN FIRST HAND KNOWLEDGE OF THE PROJECT AREA. IF ANY DISCREPANCY ARE DISCOVERED NOTIFY THE ENGINEER IN WRITING WITHIN 24 HOURS.
3. THE CONTRACTOR SHALL PROVIDE 72 HOUR NOTICE THE THE UTILITIES PROTECTION CENTER PRIOR TO CONSTRUCTION COMMENCEMENT OR EXCAVATION. THE CONTRACTOR SHALL PROVIDE ADEQUATE PROTECTION FOR ALL EXISTING UTILITIES WITHIN THE CONSTRUCTION AREA AND REPAIR ANY UTILITIES DAMAGED DURING CONSTRUCTION AT NO COST TO THE OWNER/DEVELOPER.
4. THE CONTRACTOR SHALL COORDINATE ALL UTILITY DISCONNECTIONS / INTERRUPTIONS WITH THE UTILITY OWNER.
5. THE CONTRACTOR SHALL COORDINATE WITH UTILITY OWNERS ON ALL CONFLICTS.
6. THE CONTRACTOR SHALL PROVIDE APPROPRIATE SECURITY FEATURES (WARNING, DIVERSIONS, BARRIERS, ETC.) TO SECURE THE PROJECT AREA. THE CONTRACTOR SHALL PROVIDE / MAINTAIN THE ADEQUATE PEDESTRIAN ACCESS AROUND THE PROJECT AREA.
7. THE CONTRACTOR SHALL TAKE SPECIAL CARE TO PROTECT ALL TREES NOT SHOWN HEREON TO BE REMOVED AND PROVIDE ADEQUATE TREE PROTECTION AROUND THE CRITICAL ROOT ZONE FOR SUCH TREES.
8. ALL ITEMS INDICATED HEREON TO BE REMOVED / DEMOLISHED SHALL BECOME THE PROPERTY OF THE CONTRACTOR AND DISPOSED OF PROPERLY UNLESS OTHERWISE STATED WITHIN THE CONSTRUCTION CONTRACT.
9. ALL EXISTING ASPHALT / CONCRETE PAVEMENT & CURB SHALL BE PROTECTED FROM CONSTRUCTION ACTIVITIES. THE CONTRACTOR SHALL BE RESPONSIBLE FOR REPAIR / REPLACEMENT OF ANY DAMAGED AREAS.

GRAPHIC SCALE 1" = 20'

GEORGIA811 www.Georgia811.com

ESG ENGINEERING
6400 Peake Rd
Macon, GA 31210
Ph: (478) 474-4996
Fax: (478) 474-5045

GROUNDWATER WELLS #4 & #5

FOR THE
CITY OF FLOWERY BRANCH

REVISIONS

NO.	DESCRIPTION	DATE
1	ESPC SHEETS	11-7-25
2	BID SET OF PLANS	12-1-25
3	REVISED WITH CITY COMMENTS	12-5-25

BID SET

GEORGIA REGISTERED No. PE046341 PROFESSIONAL ENGINEER ANDREW D SWICEGOOD

DRAWN BY: DSC
CHECKED BY: ADS
DATE: OCT 2025
SCALE: SEE SCALE

CONTENT:

CIVIL:
EXISTING CONDITIONS & DEMOLITION PLAN

SHEET NO: 2
C1.0

*DISTURBED AREA CALCULATIONS:

PROJECT SITE: 2.14 AC
TOTAL DISTURBED AREA: 1.06 AC

DISTURBED AREA (OFF SITE): 0.14 AC
DISTURBED AREA (ON SITE): 0.92 AC
DISTURBED AREA = 0.92 AC / 2.14 AC = 43% OF PROJECT SITE
< 50% GOOD

IMPERVIOUS AREA = 1400 SF -> 0.032 AC / 1.06 AC = 3.0%

<50% GOOD
<15% GOOD

STATE ROUTE 13
(100' RIGHT-OF-WAY)

RAILROAD AVENUE

AREA
2.141 ACRES
PARCEL ID: 08098 001001, 08098 001002, 08098 001003, 08098 001004
CITY OF FLOWERY BRANCH GEORGIA
DEED BOOK 9253, PAGE 463
PLAT BOOK 876, PAGE 1

*LIMITS OF DISTURBANCE
0.92 AC (ON-SITE)
0.14 AC (OFF-SITE)
±1.06 AC (TOTAL)

10' LANDSCAPING BUFFER

SEE SHEET C2.2 FOR BUILDING DETAIL PLAN

CHEMICAL FEED BUILDING
FFE: 1122.20
AREA: 392 SF

±1,300 SY GRAVEL DRIVE
(SEE DETAIL ON SHEET C9.0)

PR. DIESEL GENERATOR

±600 LF 6' CHAIN LINK SECURITY FENCING W/ BARBED WIRE

HENDERSON WELL

EX. ABANDONED WELLHEAD. MARK LOCATION WITH STAKE.

WATERSTONE WELL

PR. 24' DOUBLE-SWING GATE W/ BARBED WIRE

10' BUILDING SETBACK

75' IMPERVIOUS BUFFER

50' LOCAL STREAM BUFFER

25' STREAM BUFFER

30' BUILDING SETBACK

EX. STREAM CENTERLINE

EX. WETLANDS (APPROX.)

EX. TOWNHOUSE

VIREO DR

PARCEL ID: 08098A000206
WATER STONE CROSSING COMMUNITY ASSOC INC
DEED BOOK 4312, PAGE 80
PLAT BOOK 816, PAGE 154A

PARCEL ID: 08098 01009
KOSWIRE INC.
4600 CANTRELL ROAD
FLOWERY BRANCH, GA 30542
26.72 ACRES

PARCEL ID: 08098 A000206
WATER STONE CROSSING COMMUNITY ASSOCIATION
4611 BEACON RIDGE LANE
FLOWERY BRANCH, GA 30542
15.52 ACRES

GENERAL SITE NOTES:

1. CONTRACTOR SHALL CLEAR & GRUB ALL AREAS WITHIN THE EASEMENT. ALL REMOVED MATERIAL SHALL BE HAULED OFF SITE AND DISPOSED OF AT A LICENSED LANDFILL-NO BURNING SHALL BE ALLOWED.
2. EXISTING UTILITIES ARE APPROXIMATE AND ARE TO BE FIELD VERIFIED BY CONTRACTOR. CONTRACTOR SHALL INFORM ENGINEER OF ANY DISCREPANCIES IN INFORMATION PRIOR TO BEGINNING WORK.
3. HORIZONTAL DATA SHOWN HEREON IS BASED ON NAD83 GEORGIA STATE PLANES, WEST ZONE, US FOOT. VERTICAL DATA SHOWN HEREON IS BASED ON NAVD88.
4. CONTRACTOR SHALL PROTECT ALL EXISTING UTILITIES. CONTRACTOR SHALL REPAIR OR REPLACE, AT HIS OR HER OWN EXPENSE, ANY UTILITIES DAMAGED DURNING CONSTRUCTION.
5. CONTRACTOR SHALL COORDINATE WITH POWER & TELECOM COMPANIES FOR PROTECTION OF ANY EXISTING AND/OR RELOCATED OVERHEAD OR UNDERGROUND UTILITIES.

EROSION & SEDIMENT CONTROL NOTE:

1. CONTRACTOR SHALL PLACE TEMP. AND PERM. GRASSING ON ALL DISTURBED PERVIOUS AREAS. CONTRACTOR SHALL INSTALL SINGLE-ROW SILT FENCE ALONG THE DOWNSTREAM EDGE OF ALL DISTURBED PERVIOUS AREAS AND INSTALL DOUBLE-ROW SILT FENCE ADJACENT TO STREAM BUFFERS. CONTRACTOR SHALL INSTALL CHECK DAMS AT 2' VERTICAL INTERVALS WHERE PROPOSED CONSTRUCTION DISTURBS OR PARALLELS ROADSIDE DRAINAGE DITCHES.

HATCH LEGEND:

ASPHALT PAVEMENT
CONCRETE PAD AREAS
GRAVEL SITE PAD / ACCESS DRIVE

GRAPHIC SCALE 1" = 20'

GEORGIA811 www.Georgia811.com

ESG ENGINEERING
6400 Peake Rd
Macon, GA 31210
Ph: (478) 474-4996
Fax: (478) 474-5045

GROUNDWATER WELLS #4 & #5

FOR THE
CITY OF FLOWERY BRANCH

REVISIONS

NO.	DESCRIPTION	DATE
1	EPSC SHEETS	11-7-25
2	BID SET OF PLANS	12-1-25
3	REVISED WITH CITY COMMENTS	12-5-25

BID SET

GEORGIA REGISTERED No. PE046341 PROFESSIONAL ENGINEER ANDREW D SWICEGOOD

DRAWN BY: DSC
CHECKED BY: ADS
DATE: OCT 2025
SCALE: SEE SCALE

CONTENT:

CIVIL:
SITE PLAN

SHEET NO: 2 3
C2.0

CONSTRUCTION NOTES:

1. ALL EXTERIOR, EXPOSED ABOVE GROUND PIPING SHALL HAVE INSULATION PROVIDED, CONSISTING OF A POLYURETHANE FOAM CORE AND PVC JACKET TO MATCH CORRESPONDING PIPE SIZE. CONTRACTOR SHALL ENSURE SEAL BETWEEN JACKET/INSULATION AND PIPING.
2. PR. 3-WAY FIRE HYDRANT ASSEMBLY, CONSISTING OF 8"x6" RJ DI TEE, 6" RJ GATE VALVE W/ BOX & COVER, & 6" RJ DI LEAD PIPE.
3. ALL DUCTILE IRON PIPE, FITTINGS, & VALVES SHALL BE LINED WITH TNEMEC SERIES N140 POTA-POX PLUS OR APPROVED EQUAL.
4. REQUIREMENTS FOR COATING OF ABOVE-GROUND (EXPOSED) DUCTILE IRON PIPES, FITTINGS, AND VALVES:

PROP. SYSTEM TYPE:	EPOXY/EPOXY/POLYURETHANE
PROP. SURFACE PREPARATION:	PER MANUFACTURER'S RECOMMENDATION
PROP. PRIMER:	SERIES N69 HI-BUILD EPOXOLINE II - 3.0 TO 5.0 MILS DFT
PROP. INTERMEDIATE COAT:	SERIES N69 HI-BUILD EPOXOLINE II - 4.0 TO 6.0 MILS DFT
PROP. FINISH COAT:	SERIES 73 ENDURA-SHIELD - 2.0 TO 3.0 MILS DFT
PROP. TOTAL DFT:	9.0 TO 14.0 MILS
PROP. FINISH COLOR:	[AS SELECTED BY ENGINEER] FROM MANUFACTURER'S STANDARD COLORS

5. REQUIREMENTS FOR COATING OF BELOW GRADE (BURIED) DUCTILE IRON PIPES, FITTINGS, AND VALVES SHALL BE AS OUTLINED IN SPECIFICATION SECTIONS 11200 & 02530.

SCALE: 1/2" = 1'-0"

EDGE OF GRAVEL DRIVE

PR. 6" RJXFL DIP SPOOL PIECE
PR. 8"x6" RJ DI REDUCER
PR. 1.5" DOUBLE STRAP TAPPING SADDLE (INCL. UNDER WELL SITE IMPROVEMENTS LINE ITEM)
PR. PRECAST METER/BACKFLOW VAULT
PR. 1.5" PVC WATER LINE W/ ISOLATION VALVE, METER, AND BACKFLOW PREVENTER IN METER BOX TO BE SET IN STONE BEDDING
8'
PR. 6" FL. 709DCDA DOUBLE CHECK DETECTOR ASSEMBLY BACKFLOW PREVENTER
PR. 6" FL DIP SPOOL PIECE
PR. 6" FL DI 90° BEND
6'
PR. 6" RJXFL DIP SPOOL PIECE
PR. 4" FL. GATE VALVE W/ HANDWHEEL
PR. 59.5"x83.5" ALUMINUM ACCESS HATCH CAST INTO VAULT TOP (EJ H60841918 OR APPROVED EQUAL)
PR. FROST PROOF YARD HYDRANT W/ 3/4" HOSE CONNECTION
DEPRESSED CHEMICAL STORAGE BASIN
COVERED SHELTER ROOF EDGE/EAVE
PR. FULL DEPTH ASPHALT SECTION PER DETAIL ON SHEET C9.4
CONC. WALKING AREA (4" THICK)
5'
PR. 3" PVC DRAIN LINE FROM BACKFLOW VAULT
DEPRESSED CHEMICAL STORAGE BASIN
PR. 4" CPVC UNDER DRAIN SPILL CONTAINMENT SYSTEM
CONTRACTOR SHALL RUN DRAIN LINE @ 1% MIN. SLOPE & DAYLIGHT INTO PR. SLOPE
SSMH-1 (VACUUM POINT - SEE COATING NOTES)
RIM: 1122.20
INV: 1114.20

ELECTRICAL & HVAC LINES NOT SHOWN FOR CLARITY - SEE MECHANICAL PLANS FOR DETAILED PLACEMENT OF HVAC SYSTEM COMPONENTS.
5'
3'
PR. HVAC CONDENSER PAD (SEE DETAIL ON SHEET C9.4)
EMAX TANKLESS WATER HEATER 32 kW PRO SERIES XTP 032208
CHLORINE INJECTION (SEE DETAIL ON SHEET C9.1)
PR. 6" FL GATE VALVE W/ HANDWHEEL
FLUORIDE INJECTION (SEE DETAIL ON SHEET C9.1)
PR. 6"x4" FL DI WYE
PR. 6" FL DIP
PR. 4" FL DI 45° BEND
PR. 4" FL DIP
PR. 4" FL DI SPOOL PIECE
PR. 1.5" DOMESTIC WATER
PR. SPIGOT (TYP. OF 3)
PR. EYE WASH & SHOWER STATION U-LINE H-10735 (TYP. OF 2)
PR. MOP BASIN PROFLO PFMB2424 (TYP. OF 2)
5'
PR. 4" PVC BUILDING SEWER LINE (SEE PLUMBING PLAN FOR DETAILED LAYOUT)

6" CORDONEL ULTRASONIC FLOW METER
PR. 6" FL. GATE VALVE W/ HANDWHEEL
CORE WALL & INSTALL LS-200 LINK SEAL. PROVIDE GROUTING OF ANNULAR SPACE ON BOTH INTERIOR & EXTERIOR OF BUILDING (TYP. ALL WALL PENETRATIONS)
PR. 6" FL DI 90° BEND
4" CORDONEL ULTRASONIC FLOW METER
PR. 4" FL. GATE VALVE W/ HANDWHEEL
PR. 4" FL. DI 90° BEND
PR. 6" RJ DIP
PR. 6" RJ GATE VALVE W/ RISER BOX & COVER
PR. 4" RJ DIP
PR. 4" FL. DI LONG RADIUS 90° BEND. INSTALL 3/4" HOSE BIB ON RISER PIPE W/ TAPPING SADDLE.
STUB-OUT 4" FL. BUTTERFLY VALVE W/ HANDWHEEL (SEE DETAIL ON SHEET C9.4)
PR. INSULATED FIBERGLASS ENCLOSURE, APPROX. DIMENSIONS 36x24x36 (HUBBELL HOT BOX OR APPROVED EQUAL)
4" CRUSHER RUN PLACED BENEATH ENCLOSURE
PR. 4" BLIND FLANGE
PR. 4" RJ DI 22.5° BEND
PR. 4" RJ DIP
TO WATERSTONE WELL (SEE INSET "A" THIS SHEET)

WELL HOUSE PREFABRICATED ENCLOSURE BY CLAY-GREENE (TYP. OF 2)
PR. 4" FL. CHECK VALVE
PR. 4"x6" FL. DI REDUCER
PR. 6" FL. DI LONG RADIUS 90° BEND
PR. 6"x4" RJ DI TEE
PR. 4" FL. DI LONG RADIUS 90° BEND
SEE WELL SECTIONS ON DETAIL SHEET C9.3
HENDERSON WELL - SEE SECTION 80001 FOR WELL REHABILITATION
PLACE 8'x6' CONC. PAD FOR WELL HOUSE (SEE DETAIL ON SHEET C9.4)

PIPE GALLERY ROOM

CHLORINE ROOM

4-EA GRUNDFOS CHEMICAL FEED PUMPS DDE 6-10 B-PV/T/C-X-31003BC (SEE SECTION 70001)
SEE SECTION 70001 FOR CHEMICAL FEED SYSTEM PIPING & VALVES
PR. REMOVABLE RAMP (U-LINE H-4038)
PR. SPILL CONTAINMENT PALLET (U-LINE H-4036)

FLUORIDE ROOM

4-EA GRUNDFOS CHEMICAL FEED PUMPS DDE 6-10 B-PV/T/C-X-31003BC (SEE SECTION 70001)
PR. 4" CPVC UNDER DRAIN SPILL CONTAINMENT SYSTEM (SEE PLUMBING PLAN FOR DETAILED LAYOUT)
PR. REMOVABLE RAMP (U-LINE H-4038)
PR. SPILL CONTAINMENT FLOOR DRAIN (TYP. OF 5)
PR. SPILL CONTAINMENT PALLET (U-LINE H-4036)

SSMH-2 (SEE COATING NOTES)
RIM: 1122.20
INV: 1116.20

CO-2
RIM: 1122.10
INV: 1113.50

CHEMICAL STORAGE BASIN & SPILL CONTAINMENT MANHOLE COATING SYSTEM:

- SURFACE PREP: CSP 4–6
- PRIMER: 100% SOLIDS EPOXY OR VE PRIMER, 6–10 MILS
- INTERMEDIATE COAT: NOVOLAC EPOXY OR VE, 15–20 MILS
- TOPCOAT: HIGH-BUILD NOVOLAC EPOXY OR VINYL ESTER, 80–125 MILS

INSET "A"
SCALE: 1/2" = 1'-0"

STUB-OUT 4" FL. BUTTERFLY VALVE W/ HAND WHEEL (SEE DETAIL ON SHEET C9.4)
4" CRUSHER RUN PLACED BENEATH ENCLOSURE
PR. INSULATED FIBERGLASS ENCLOSURE, APPROX. DIMENSIONS 36x24x36 (HUBBELL HOT BOX OR APPROVED EQUAL)
TO CHEMICAL FEED BUILDING (THIS SHEET)
PR. 4" RJ DIP
PR. 4" RJ GATE VALVE W/ RISER BOX & COVER
PR. 4" RJ DI TEE
PR. 2-EA 4" FL. DI LONG RADIUS 90° BEND, 4" FLxRJ DI SPOOL PIECE, & 4" RJ DI 90° BEND
WELL HOUSE PREFABRICATED ENCLOSURE BY CLAY-GREENE (TYP. OF 2)
25' STREAM BUFFER
PR. 4" BLIND FLANGE
PR. 4" FL. DI LONG RADIUS 90° BEND. INSTALL 3/4" HOSE BIB ON RISER PIPE W/ TAPPING SADDLE.
PLACE 8'x6' CONC. PAD FOR WELL HOUSE (SEE DETAIL ON SHEET C9.4)
PR. 4" FL. CHECK VALVE
SEE WELL SECTIONS ON DETAIL SHEET C9.3
WATERSTONE WELL - SEE SECTION 80001 FOR WELL REHABILITATION

GEORGIA811 www.Georgia811.com

ESG ENGINEERING
6400 Peake Rd
Macon, GA 31210
Ph: (478) 474-4996
Fax: (478) 474-5045

GROUNDWATER WELLS #4 & #5

FOR THE CITY OF FLOWERY BRANCH

REVISIONS NO.	DESCRIPTION	DATE
1	ESPC SHEETS	11-7-25
2	BID SET OF PLANS	12-1-25
3	REVISED WITH CITY COMMENTS	12-5-25

BID SET

GEORGIA REGISTERED No. PE046341 PROFESSIONAL ENGINEER ANDREW D SWICEGOOD

DRAWN BY: DSC
CHECKED BY: ADS
DATE: OCT 2025
SCALE: SEE SCALE

CONTENT:

CIVIL:
BUILDING PIPING PLAN

SHEET NO: C2.1

CONSTRUCTION NOTES:

1. INTERIOR WALL COATING FOR THE CHEMICAL FEED BUILDING SHALL BE AS FOLLOWS:
   - BASE: EPOXY PRIMER (8-12 MILS DFT)
   - TOP: CHEMICAL-RESISTANT EPOXY OR NOVOLAC EPOXY (6-10 MILS)
2. INTERIOR & EXTERIOR FLOOR COATING FOR THE CHEMICAL FEED BUILDING SHALL BE AS FOLLOWS:
   - BASE: EPOXY FLOOR PRIMER (3-5 MILS DFT)
   - INTERMEDIATE: HIGH-BUILD EPOXY COAT (10-20 MILS DFT)
   - TOP: UV-STABLE ALIPHATIC POLYURETHANE (2-4 MILS DFT)
3. LINING FOR CHEMICAL STORAGE BASIN SHALL BE AS FOLLOWS:
   - SURFACE PREP: CSP 4–6
   - PRIMER: 100% SOLIDS EPOXY OR VE PRIMER, 6–10 MILS
   - INTERMEDIATE COAT: NOVOLAC EPOXY OR VE, 15–20 MILS
   - TOPCOAT: HIGH-BUILD NOVOLAC EPOXY OR VINYL ESTER, 80–125 MILS
4. COATING SYSTEM SHALL BE BY TNEMEC, PPG, SHERWIN-WILLIAMS, OR APPROVED EQUAL.
5. CONTRACTOR SHALL SUBMIT A SCHEDULE OF THE PROPOSED WALL & FLOOR COATING SYSTEM PRIOR TO ORDERING MATERIALS FOR REVIEW AND APPROVAL BY THE ENGINEER.

SCALE: 1/2" = 1'-0"

CONTRACTOR SHALL RUN/STUB-OUT 3" PVC CONDUIT TO METERING POINT AT BLDG. (SEE UTILITY PLAN FOR CONTINUATION)

EDGE OF GRAVEL DRIVE

PR. BOLLARD (TYP. OF 4)

EMAX TANKLESS WATER HEATER 32 kW PRO SERIES XTP 032208

PR. LOUVRE

PR. HVAC CONDENSER PAD (SEE DETAIL ON SHEET C9.4)

PR. WALL PACK LIGHTS (TYP. OF 3)

PR. EXHAUST

PREFABRICATED CHEMICAL FEED BUILDING (SEE BUILDING PLANS)

SEE ELECTRICAL SHEETS FOR EXACT PLACEMENT & LAYOUT OF EQUIPMENT

SEE ELECTRICAL SHEETS FOR EXACT PLACEMENT & LAYOUT OF ELECTRICAL & CONTROLS EQUIPMENT.

PIPE GALLERY ROOM

PR. EYE WASH & SHOWER STATION U-LINE H-10735 (TYP. OF 2)

PR. LOUVRE

PR. SPIGOT & MOP BASIN PROFLO PFMB2424 (TYP. OF 2)

BUILDING FFE: 1122.20

PR. EXHAUST

CHLORINE ROOM

PR. REMOVABLE RAMP (U-LINE H-4038)

PR. SPILL CONTAINMENT PALLET (U-LINE H-4036)

PR. EXHAUST

FLUORIDE ROOM

PR. REMOVABLE RAMP (U-LINE H-4038)

PR. SPILL CONTAINMENT FLOOR DRAIN (TYP. OF 5 - SEE PLUMBING PLAN)

PR. SPILL CONTAINMENT PALLET (U-LINE H-4036)

PR. 4" DOWNSPOUT AND 1'x1.5' SPLASH PAD (TYP. OF 3)

DEPRESSED CHEMICAL STORAGE BASIN (SEE NOTE #3)

COVERED SHELTER ROOF EDGE/EAVE

4" CONC. WALKING AREA (SEE NOTE #2)

PR. FULL DEPTH ASPHALT SECTION PER DETAIL ON SHEET C9.4

METAL DOOR (TYP. OF 3)

DEPRESSED CHEMICAL STORAGE BASIN (SEE NOTE #3)

POLE BARN CHEMICAL STORAGE COVER

PR. CONC. FOOTER (TYP. OF 4) (SEE DETAIL ON SHEET C9.4)

PLACE 8'x6' CONC. PAD FOR WELL HOUSE (SEE DETAIL ON SHEET C9.4)

HENDERSON WELL

4" CRUSHER RUN PLACED BENEATH ENCLOSURE

PR. FIBERGLASS ENCLOSURE, APPROX. DIMENSIONS 36x24x36 (HUBBELL HOT BOX OR APPROVED EQUAL)

SEE ELECTRICAL SHEETS FOR CONDUIT/WIRING RUNS

PR. HENDERSON WELL MAIN PANEL (SEE ELECTRICAL SHEETS)

TO WATERSTONE WELL (SEE INSET "A" THIS SHEET)

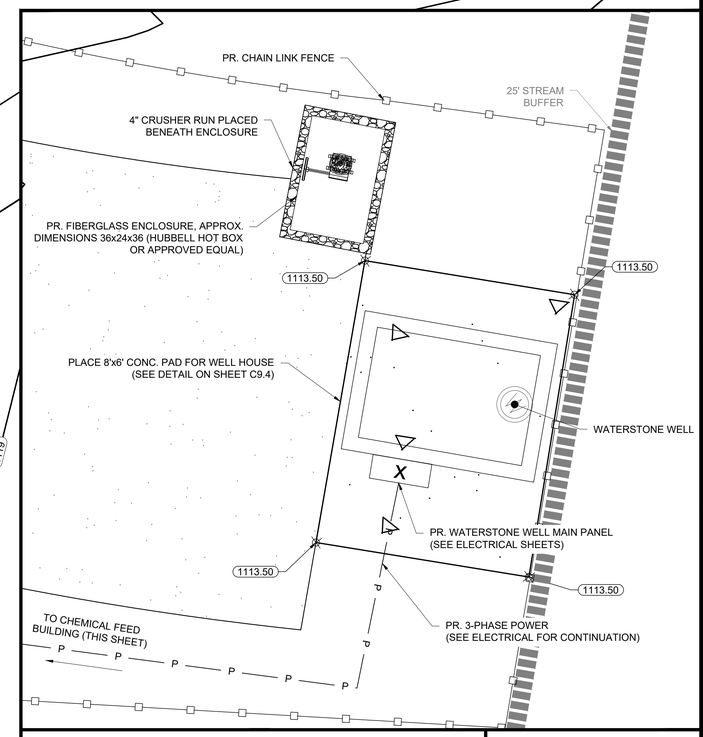

INSET "A"
SCALE: 1/2" = 1'-0"

ESG ENGINEERING
6400 Peake Rd
Macon, GA 31210
Ph: (478) 474-4996
Fax: (478) 474-5045

GROUNDWATER WELLS #4 & #5

FOR THE
CITY OF FLOWERY BRANCH

REVISIONS

NO.	DESCRIPTION	DATE
1	ESPC SHEETS	11-7-25
2	BID SET OF PLANS	12-1-25
3	REVISED WITH CITY COMMENTS	12-5-25

BID SET

GEORGIA REGISTERED No. PE046341 PROFESSIONAL ENGINEER ANDREW D SWICEGOOD

DRAWN BY: DSC
CHECKED BY: ADS
DATE: OCT 2025
SCALE: SEE SCALE

CONTENT:

CIVIL:
BUILDING DETAIL PLAN

SHEET NO: 3
C2.2

GEORGIA811 www.Georgia811.com

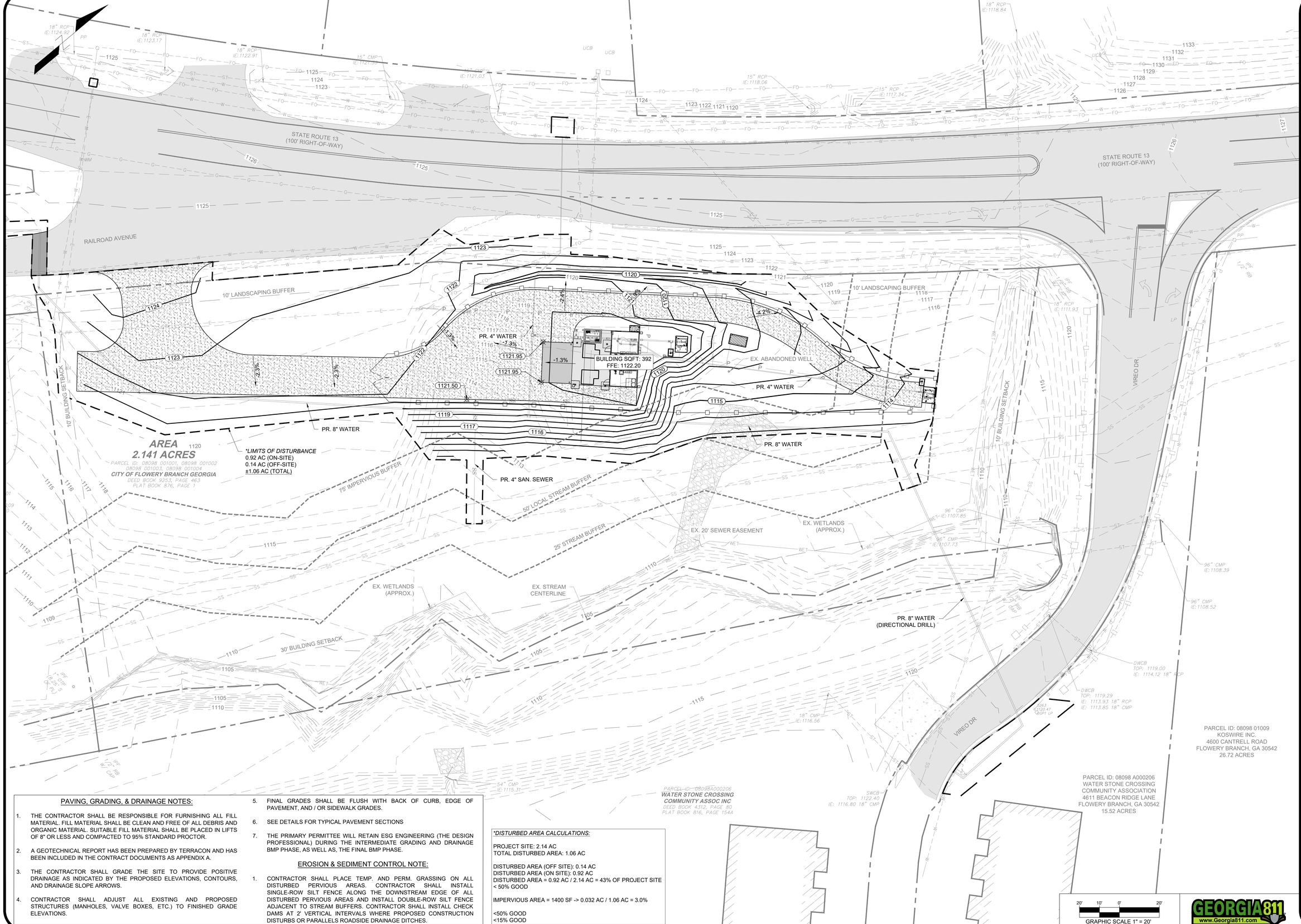

PAVING, GRADING, & DRAINAGE NOTES:

1. THE CONTRACTOR SHALL BE RESPONSIBLE FOR FURNISHING ALL FILL MATERIAL. FILL MATERIAL SHALL BE CLEAN AND FREE OF ALL DEBRIS AND ORGANIC MATERIAL. SUITABLE FILL MATERIAL SHALL BE PLACED IN LIFTS OF 8" OR LESS AND COMPACTED TO 95% STANDARD PROCTOR.
2. A GEOTECHNICAL REPORT HAS BEEN PREPARED BY TERRACON AND HAS BEEN INCLUDED IN THE CONTRACT DOCUMENTS AS APPENDIX A.
3. THE CONTRACTOR SHALL GRADE THE SITE TO PROVIDE POSITIVE DRAINAGE AS INDICATED BY THE PROPOSED ELEVATIONS, CONTOURS, AND DRAINAGE SLOPE ARROWS.
4. CONTRACTOR SHALL ADJUST ALL EXISTING AND PROPOSED STRUCTURES (MANHOLES, VALVE BOXES, ETC.) TO FINISHED GRADE ELEVATIONS.
5. FINAL GRADES SHALL BE FLUSH WITH BACK OF CURB, EDGE OF PAVEMENT, AND / OR SIDEWALK GRADES.
6. SEE DETAILS FOR TYPICAL PAVEMENT SECTIONS
7. THE PRIMARY PERMITTEE WILL RETAIN ESG ENGINEERING (THE DESIGN PROFESSIONAL) DURING THE INTERMEDIATE GRADING AND DRAINAGE BMP PHASE, AS WELL AS, THE FINAL BMP PHASE.

EROSION & SEDIMENT CONTROL NOTE:

1. CONTRACTOR SHALL PLACE TEMP. AND PERM. GRASSING ON ALL DISTURBED PERVIOUS AREAS. CONTRACTOR SHALL INSTALL SINGLE-ROW SILT FENCE ALONG THE DOWNSTREAM EDGE OF ALL DISTURBED PERVIOUS AREAS AND INSTALL DOUBLE-ROW SILT FENCE ADJACENT TO STREAM BUFFERS. CONTRACTOR SHALL INSTALL CHECK DAMS AT 2' VERTICAL INTERVALS WHERE PROPOSED CONSTRUCTION DISTURBS OR PARALLELS ROADSIDE DRAINAGE DITCHES.

*DISTURBED AREA CALCULATIONS:

PROJECT SITE: 2.14 AC
TOTAL DISTURBED AREA: 1.06 AC

DISTURBED AREA (OFF SITE): 0.14 AC
DISTURBED AREA (ON SITE): 0.92 AC
DISTURBED AREA = 0.92 AC / 2.14 AC = 43% OF PROJECT SITE
< 50% GOOD

IMPERVIOUS AREA = 1400 SF -> 0.032 AC / 1.06 AC = 3.0%

<50% GOOD
<15% GOOD

ESG ENGINEERING
6400 Peake Rd
Macon, GA 31210
Ph: (478) 474-4996
Fax: (478) 474-5045

GROUNDWATER WELLS #4 & #5

FOR THE
CITY OF FLOWERY BRANCH

REVISIONS

NO.	DESCRIPTION	DATE
1	ESPC SHEETS	11-7-25
2	BID SET OF PLANS	12-1-25
3	REVISED WITH CITY COMMENTS	12-5-25

BID SET

GEORGIA REGISTERED PROFESSIONAL ENGINEER
No. PE046341
ANDREW D SWICEGOOD

DRAWN BY: DSC
CHECKED BY: ADS
DATE: OCT 2025
SCALE: SEE SCALE

CONTENT:
CIVIL:
GRADING & DRAINAGE PLAN

SHEET NO: 23
C3.0

GEORGIA811 www.Georgia811.com

*DISTURBED AREA CALCULATIONS:

PROJECT SITE: 2.14 AC
TOTAL DISTURBED AREA: 1.06 AC

DISTURBED AREA (OFF SITE): 0.14 AC
DISTURBED AREA (ON SITE): 0.92 AC
DISTURBED AREA = 0.92 AC / 2.14 AC = 43% OF PROJECT SITE
< 50% GOOD

IMPERVIOUS AREA = 1400 SF -> 0.032 AC / 1.06 AC = 3.0%

<50% GOOD
<15% GOOD

PR. DIG PIT
EX. 6" PVC WATER LINE (OWNED BY CITY OF GAINESVILLE)
CUT, CAP, & ABANDON EX. 2" WATER LINE IN PLACE
GDOT APPROVAL
#U-139-012970-1
STATE ROUTE 13
(100' RIGHT-OF-WAY)
EX. 2" PVC WATER LINE (OWNED BY CITY OF FLOWERY BRANCH)
PR. LAUNCHING PIT
PR. 4" WATER MAIN EXTENSION - CONNECT TO EX. LINE W/ 2" TAPPING SLEEVE & VALVE, RJ DI BENDS & RJ DI REDUCER
4" RJ DIP WATER MAIN INSTALLED VIA HORIZONTAL DIRECTIONAL DRILL
GDOT APPROVAL
#U-139-012970-1
STATE ROUTE 13
(100' RIGHT-OF-WAY)
EX. 6" HIGH PRESSURE STL. GAS MAIN
8" RJ DI 90° BEND
OPEN CUT PAVEMENT (SEE PAVEMENT PATCH DETAIL ON SHEET 9.0)
POTHOLE AND VERIFY IF EX. WATER LINE IS ACTIVE
4" RJ DI 45° BEND
PR. RECEIVING PIT
EX. 10" RECLAIM WATER
RAILROAD AVENUE
MATCHLINE - SEE SHEET 4.1
EX. FIBER OPTIC LINE
EX. 1.25" GAS LINE
10' LANDSCAPING BUFFER
COORDINATE WITH GA POWER TO RELOCATE EX. GUY WIRES
PR. FIRE HYDRANT ASSEMBLY (INCL. 8"x6" RJ DI TEE, 6" RJ GATE VALVE, & 6" RJ DI LEAD PIPE)
CONTRACTOR SHALL RUN/STUB-OUT 3" PVC CONDUIT FROM EX. POWER POLE TO PR. METERING POINT AT BLDG.
EX. 2" WATER
PR. DIG PIT
8" RJ DI 45° BEND
PR. 4" DIP
HENDERSON WELL
PR. DIESEL GENERATOR ON CONC. SLAB PER DETAIL (SEE SHEET C9.4)
PR. 8" RJ DI TEE W/ 8"x4" RJ DI REDUCER
PR. 8" RJ GATE VALVE W/ BOX & COVER
POTHOLE AND VERIFY IF EX. WATER LINE IS ACTIVE
SEE BUILDING PIPING PLAN FOR CONTINUATION
PR. 4" WATER
EX. ABANDONED WELL
WATERSTONE WELL
CO-1
RIM:1121.37
INV:1110.50
PR. 8" DIP
72.33' of 4" @ 4.15%
CO-2
RIM:1122.01
INV:1113.50
UNDG. POWER TO WELLS (TYP.)
8" RJ DI 45° BEND
PR. 8" WATER
61.88' of 4" @ 4.31%
PR. 8" RJ DI TEE
10' BUILDING SETBACK
AREA
2.141 ACRES
PARCEL ID: 08098 001001, 08098 001002
08098 001003, 08098 001004
CITY OF FLOWERY BRANCH GEORGIA
DEED BOOK 9253, PAGE 463
PLAT BOOK 876, PAGE 1
*LIMITS OF DISTURBANCE
0.92 AC (ON-SITE)
0.14 AC (OFF-SITE)
±1.06 AC (TOTAL)
75' IMPERVIOUS BUFFER
Ø48" ISOLATED MANHOLE FOR CHEMICAL SPILL CONTAINMENT - ANY SPILLS TO BE REMOVED BY VACUUM TRUCK. THIS MH IS NOT CONNECTED TO THE SANITARY SEWER SYSTEM.
PR. 8" WATER
8" RJ DI 45° BEND
PR. RECEIVING PIT
EXISTING SS MH
RIM:1113.61
INV IN: 1106.75 4"
INV IN: 1104.00 12"
INV OUT: 1103.93 12"
50' STREAM BUFFER
25' STREAM BUFFER
EX. 20' SEWER EASEMENT
EX. WETLANDS (APPROX.)
EX. 12" SAN. SEWER
EX. WETLANDS (APPROX.)
EX. STREAM CENTERLINE
30' BUILDING SETBACK
PR. HORIZONTAL DIRECTIONAL DRILL ±130 LF 8" HDPE DR-11 (DIPS) WATER MAIN. PROVIDE RESTRAINED HDPExMJ TRANSITION COUPLINGS ON EITHER END TO CONTINUE PIPE MATERIAL AS DUCTILE.
PERMANENT UTILITY EASEMENT
CONTRACTOR SHALL REMOVE EX. EVERGREEN SHRUBS, VEGETATION, AND CREPE MYRTLE TREE & PROVIDE REPLACEMENT OF ALL LANDSCAPING TO MATCH EXISTING.
PR. CONNECTION TO EX. WATER MAIN W/ 8"x6" RJ DI REDUCER, RJ DI BENDS, AND 6" TAPPING SLEEVE & VALVE
PR. LAUNCHING PIT
8" RJ DI 90° BEND
EX. FIRE HYDRANT
EX. 6" WATER LINE
TEMPORARY CONSTRUCTION EASEMENT
PARCEL ID: 08098A000206
WATER STONE CROSSING COMMUNITY ASSOC INC
DEED BOOK 4312, PAGE 80
PLAT BOOK 816, PAGE 154A
PARCEL ID: 08098A000206
WATER STONE CROSSING COMMUNITY ASSOCIATION
4611 BEACON RIDGE LANE
FLOWERY BRANCH, GA 30542
15.52 ACRES
PARCEL ID: 08098 01009
KOSWIRE INC.
4600 CANTRELL ROAD
FLOWERY BRANCH, GA 30542
26.72 ACRES
EX. IRRIGATION WATER LINE
EX. STONE FENCE POST (TYP.)
EX. UNDG. POWER
EX. FIBER OPTIC LINE
VIREO DR
RAILROAD AVENUE
10' BUILDING SETBACK
10' LANDSCAPING BUFFER
SSMH TOP: 1120.41 IE: 1105.24 12" PVC IE: 1105.20 12" PVC
SSMH TOP: 1117.09 IE: 1106.33 8" PVC IE: 1104.93 12" PVC IE: 1104.92 12" PVC
SSMH TOP: 1116.13 IE: 1103.71 12" PVC IE: 1103.35 12" PVC
SWCB TOP: 1122.40 IE: 1116.80 18" CMP
SSMH TOP: 1122.27 IE: 1107.85 8" PVC
DWCB TOP: 1119.00 IE: 1114.12 18" RCP
DWCB TOP: 1119.29 IE: 1113.91 18" RCP IE: 1113.85 18" CMP
96" CMP IE:1107.85
96" CMP IE:1107.13
96" CMP IE:1108.39
96" CMP IE:1108.52
18" CMP IE:1116.56
18" RCP IE:1111.93
18" RCP IE:1118.84
15" RCP IE:1118.06
15" RCP IE:1117.34
15" CMP IE:1121.03
18" RCP IE:1122.91
18" RCP IE:1123.17
18" RCP IE:1124.92
1" IPF W/ 1/2" RB CAP
1" IPF W/ 1/2" RB
1" OPT (8.25' S OF RJ)

KEYED NOTE:

① PIPE INSTALLED BEYOND BACKFLOW VAULT TO BE PAID FOR VIA LINEAR FOOT LINE ITEMS - NOT TO BE INCLUDED UNDER LUMP SUM WELL SITE IMPROVEMENTS ITEM.

UTILITY NOTES:

1. THE CONTRACTOR SHALL PROVIDE 72 HOUR NOTICE TO THE UTILITIES PROTECTION CENTER PRIOR TO CONSTRUCTION COMMENCEMENT OR EXCAVATION. THE CONTRACTOR SHALL PROVIDE ADEQUATE PROTECTION FOR ALL EXISTING UTILITIES WITHIN THE CONSTRUCTION AREA AND REPAIR ANY UTILITIES DAMAGED DURING CONSTRUCTION AT NO COST TO THE OWNER.
2. THE CONTRACTOR SHALL FIELD VERIFY LOCATION AND SIZE OF ALL EXISTING UTILITIES WITHIN THE PROJECT AREA. THE CONTRACTOR SHALL COORDINATE WITH UTILITY OWNERS ON ALL CONFLICTS.
3. THE CONTRACTOR SHALL VERIFY ALL DIMENSIONS AND LOCATIONS OF PROPOSED UTILITIES AND COORDINATE WITH ALL APPLICABLE PLANS FOR THE PROJECT. THE CONTRACTOR SHALL BE RESPONSIBLE FOR PROPER PLACEMENT AND FIT OF ALL PROPOSED UTILITIES. IF ANY DISCREPANCIES ARE DISCOVERED, NOTIFY THE ENGINEER IN WRITING WITHIN 24 HOURS.
4. TEN (10') FOOT HORIZONTAL & EIGHTEEN (18") INCH VERTICAL SEPARATION SHALL BE MAINTAINED BETWEEN ALL PROPOSED POTABLE WATER MAINS AND SANITARY SEWER MAINS.
5. FOUR (4') FOOT MINIMUM COVER SHALL BE MAINTAINED ABOVE ALL PROPOSED WATER MAINS AND SERVICE CONNECTIONS.
6. ALL SANITARY SEWER CONSTRUCTION SHALL COMPLY WITH ALL LOCAL STANDARDS AND SPECIFICATIONS.
7. THE CONTRACTOR SHALL ADJUST THE TOPS OF ALL EXISTING AND PROPOSED UTILITY STRUCTURES TO MATCH FINAL GRADE ELEVATIONS.
8. SEE MEP DESIGN SHEETS FOR EXACT PLACEMENT OF SPECIFIED UTILITIES.
9. ALL PROPOSED WATER MAIN PIPE & FITTINGS SHALL HAVE RESTRAINED JOINTS AND HAVE CONC. THRUST BLOCKING INSTALLED.

GRAPHIC SCALE 1" = 20'

GEORGIA811 www.Georgia811.com

ESG ENGINEERING
6400 Peake Rd
Macon, GA 31210
Ph: (478) 474-4996
Fax: (478) 474-5045

GROUNDWATER WELLS #4 & #5

FOR THE
CITY OF FLOWERY BRANCH

REVISIONS NO.	DESCRIPTION	DATE
1	ESPC SHEETS	11-7-25
2	BID SET OF PLANS	12-1-25
3	REVISED WITH CITY COMMENTS	12-5-25

BID SET

GEORGIA REGISTERED No. PE046341 PROFESSIONAL ENGINEER ANDREW D SWICEGOOD

DRAWN BY: DSC
CHECKED BY: ADS
DATE: OCT 2025
SCALE: SEE SCALE

CONTENT:

CIVIL:
UTILITY PLAN

SHEET NO: C4.0

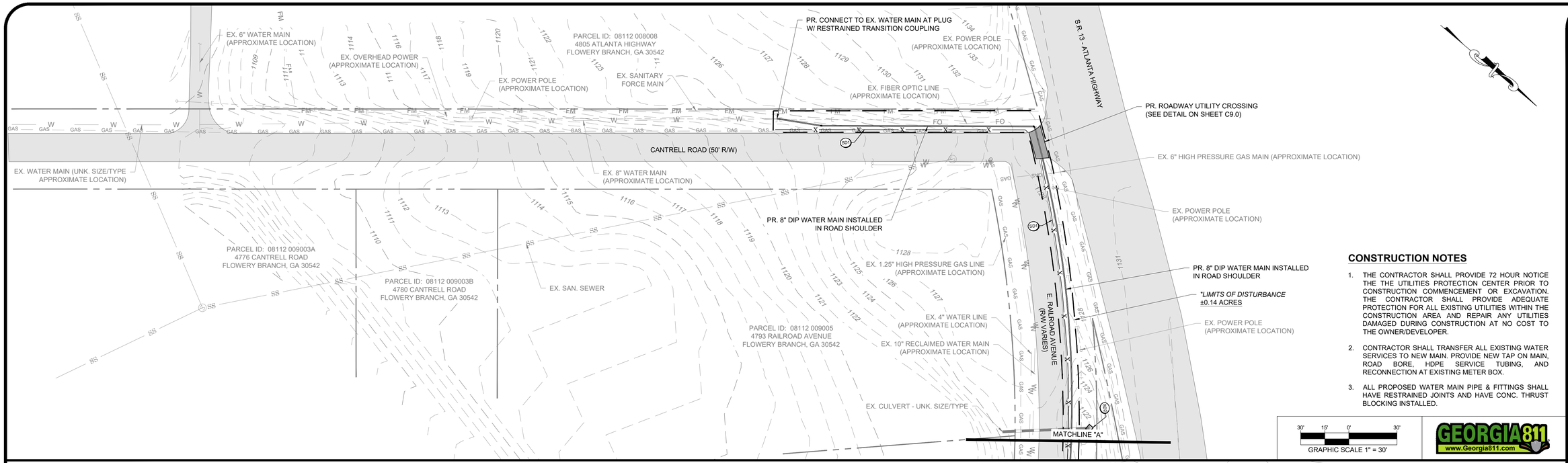

CONSTRUCTION NOTES

1. THE CONTRACTOR SHALL PROVIDE 72 HOUR NOTICE THE THE UTILITIES PROTECTION CENTER PRIOR TO CONSTRUCTION COMMENCEMENT OR EXCAVATION. THE CONTRACTOR SHALL PROVIDE ADEQUATE PROTECTION FOR ALL EXISTING UTILITIES WITHIN THE CONSTRUCTION AREA AND REPAIR ANY UTILITIES DAMAGED DURING CONSTRUCTION AT NO COST TO THE OWNER/DEVELOPER.
2. CONTRACTOR SHALL TRANSFER ALL EXISTING WATER SERVICES TO NEW MAIN. PROVIDE NEW TAP ON MAIN, ROAD BORE, HDPE SERVICE TUBING, AND RECONNECTION AT EXISTING METER BOX.
3. ALL PROPOSED WATER MAIN PIPE & FITTINGS SHALL HAVE RESTRAINED JOINTS AND HAVE CONC. THRUST BLOCKING INSTALLED.

GEORGIA811 www.Georgia811.com

*DISTURBED AREA CALCULATIONS:

PROJECT SITE: 2.14 AC
TOTAL DISTURBED AREA: 1.06 AC

DISTURBED AREA (OFF SITE): 0.14 AC
DISTURBED AREA (ON SITE): 0.92 AC
DISTURBED AREA = 0.92 AC / 2.14 AC = 43% OF PROJECT SITE
< 50% GOOD

IMPERVIOUS AREA = 1400 SF -> 0.032 AC / 1.06 AC = 3.0%

<50% GOOD
<15% GOOD

ESG ENGINEERING
6400 Peake Rd
Macon, GA 31210
Ph: (478) 474-4996
Fax: (478) 474-5045

GROUNDWATER WELLS #4 & #5

FOR THE
CITY OF FLOWERY BRANCH

REVISIONS

NO.	DESCRIPTION	DATE
1	ESPC SHEETS	11-7-25
2	BID SET OF PLANS	12-1-25
3	REVISED WITH CITY COMMENTS	12-5-25

BID SET

GEORGIA REGISTERED No. PE046341 PROFESSIONAL ENGINEER ANDREW D SWICEGOOD

DRAWN BY: DSC
CHECKED BY: ADS
DATE: OCT 2025
SCALE: SEE SCALE

CONTENT:

CIVIL:
WATER MAIN EXT.

SHEET NO: 2 3

C4.1

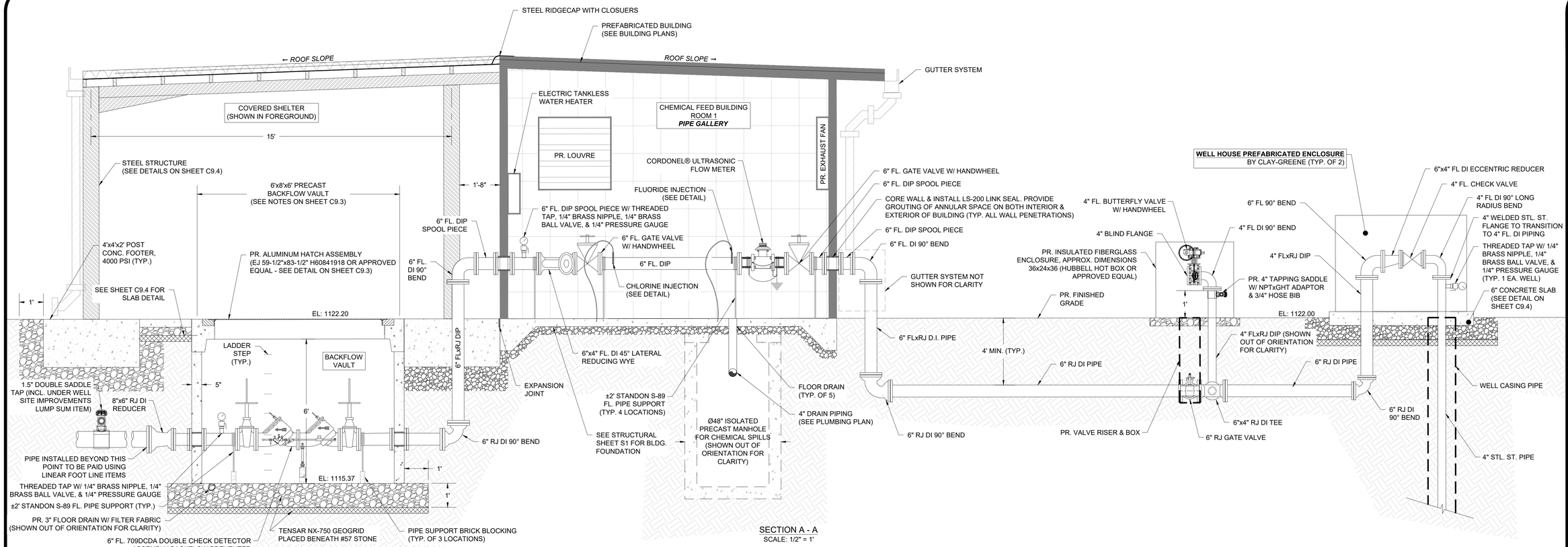

SECTION A - A
SCALE: 1/2" = 1'

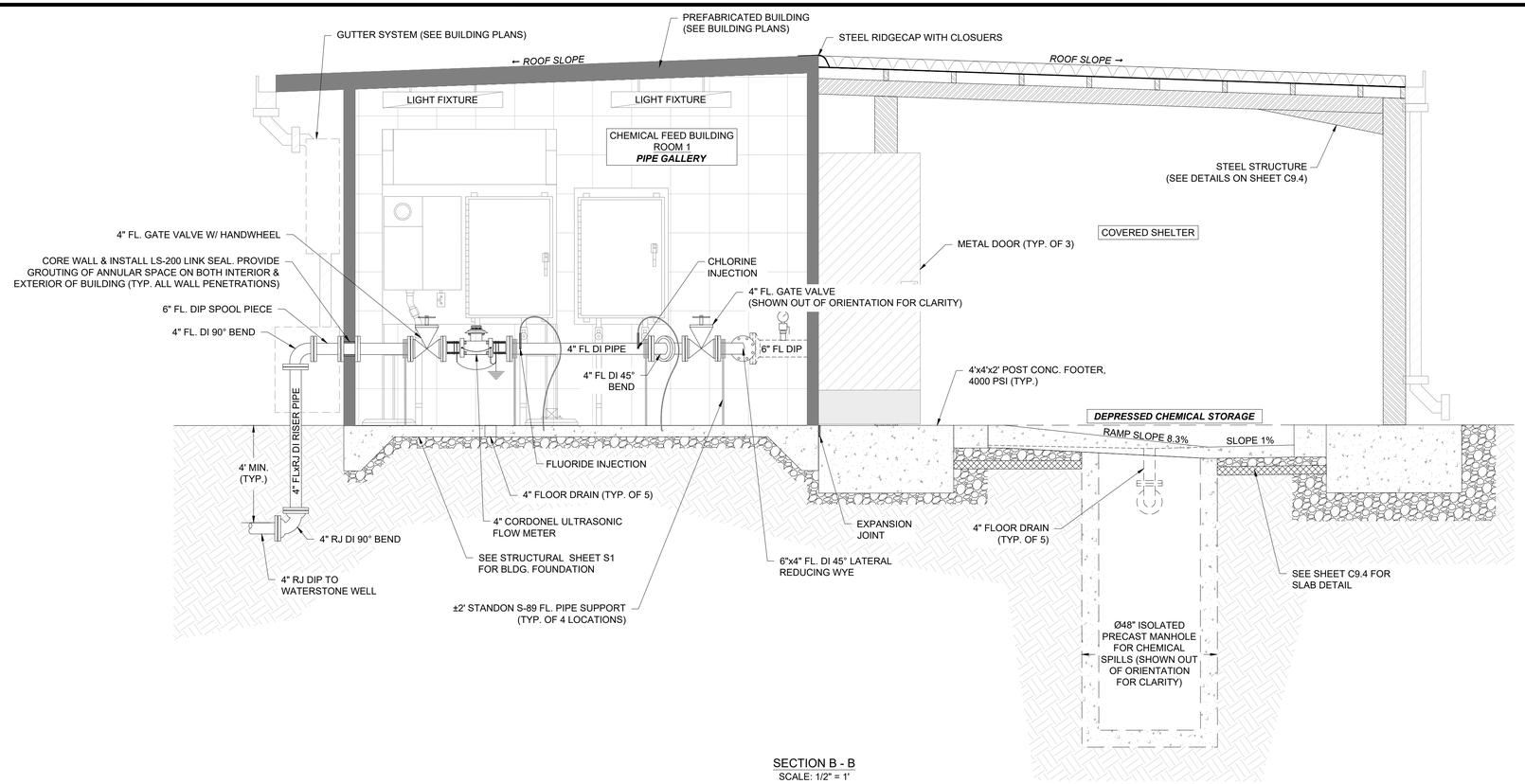

SECTION B - B
SCALE: 1/2" = 1'

ESG ENGINEERING
6400 Peake Rd
Macon, GA 31210
Ph: (478) 474-4996
Fax: (478) 474-5045

GROUNDWATER WELLS #4 & #5

FOR THE
CITY OF FLOWERY BRANCH

REVISIONS

NO.	DESCRIPTION	DATE
1	ESPC SHEETS	11-7-25
2	BID SET OF PLANS	12-1-25
3	REVISED WITH CITY COMMENTS	12-5-25

BID SET

GEORGIA REGISTERED No. PE046341 PROFESSIONAL ENGINEER ANDREW D SWICEGOOD

DRAWN BY: JDM
CHECKED BY: ADS
DATE: OCT 2025
SCALE: SEE SCALE

CONTENT:

CIVIL:
BUILDING ELEVATIONS

SHEET NO: 2 3

C5.0

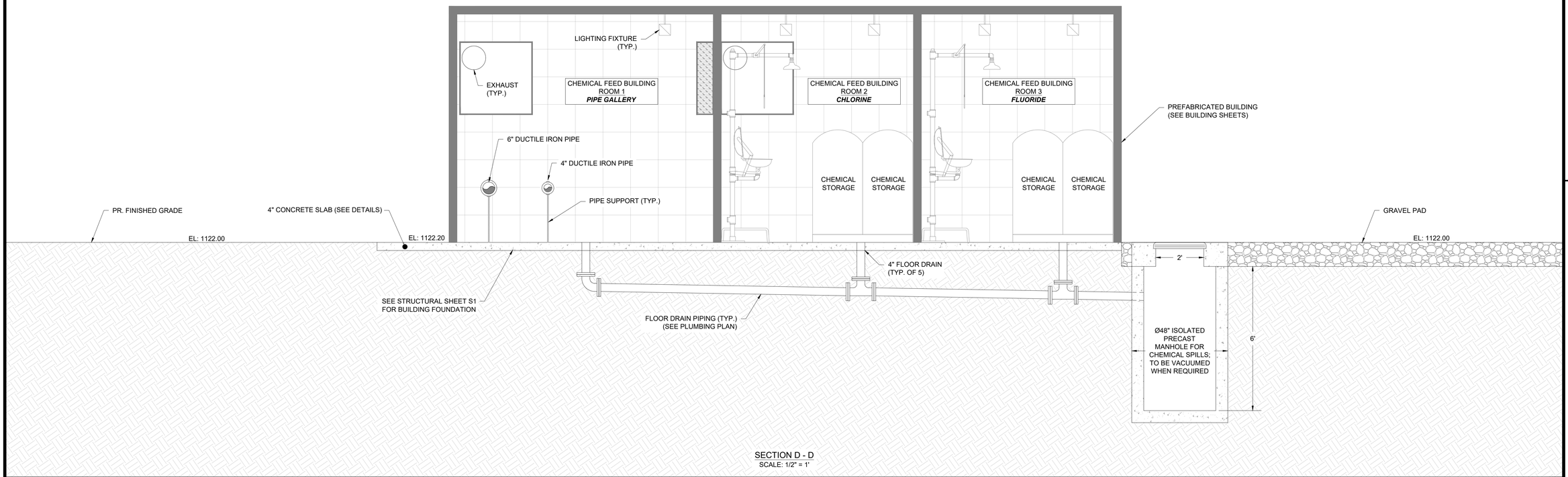

SECTION D - D
SCALE: 1/2" = 1'

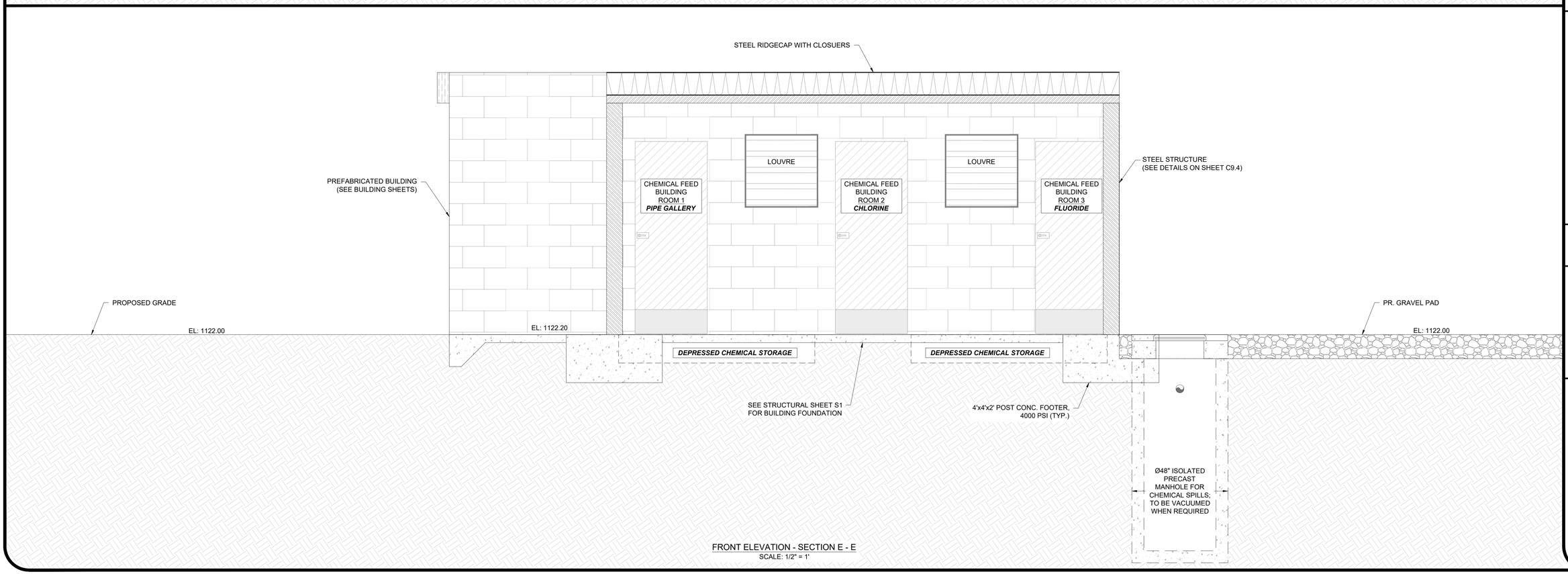

FRONT ELEVATION - SECTION E - E
SCALE: 1/2" = 1'

ESG ENGINEERING
6400 Peake Rd
Macon, GA 31210
Ph: (478) 474-4996
Fax: (478) 474-5045

GROUNDWATER WELLS #4 & #5

FOR THE
CITY OF FLOWERY BRANCH

REVISIONS

NO.	DESCRIPTION	DATE
1	ESPC SHEETS	11-7-25
2	BID SET OF PLANS	12-1-25
3	REVISED WITH CITY COMMENTS	12-5-25
4	ADDENDUM #1	12-8-25

BID SET

GEORGIA REGISTERED No. PE046341 PROFESSIONAL ENGINEER ANDREW D SWICEGOOD

DRAWN BY: JDM
CHECKED BY: ADS
DATE: OCT 2025
SCALE: SEE SCALE

CONTENT:

CIVIL:
BUILDING ELEVATIONS

SHEET NO: 4

C5.2

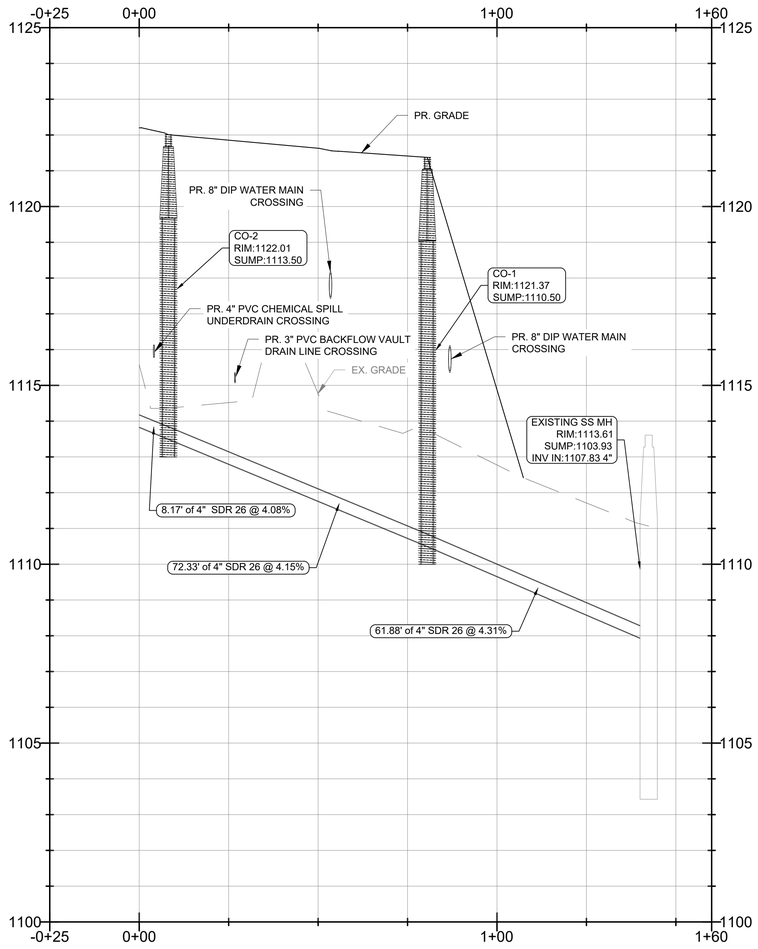

SANITARY SEWER ALIGNMENT

ESG ENGINEERING
6400 Peake Rd
Macon, GA 31210
Ph: (478) 474-4996
Fax: (478) 474-5045

GROUNDWATER WELLS #4 & #5

FOR THE
CITY OF FLOWERY BRANCH

REVISIONS

NO.	DESCRIPTION	DATE
1	ESPC SHEETS	11-7-25
2	BID SET OF PLANS	12-1-25
3	REVISED WITH CITY COMMENTS	12-5-25

BID SET

GEORGIA REGISTERED No. PE046341 PROFESSIONAL ENGINEER ANDREW D SWICEGOOD

DRAWN BY: DSC
CHECKED BY: ADS
DATE: OCT 2025
SCALE: H: 1" = 20'
V: 1" = 2'

CONTENT:

CIVIL:
SANITARY SEWER PROFILE

SHEET NO: 2 3

C5.3

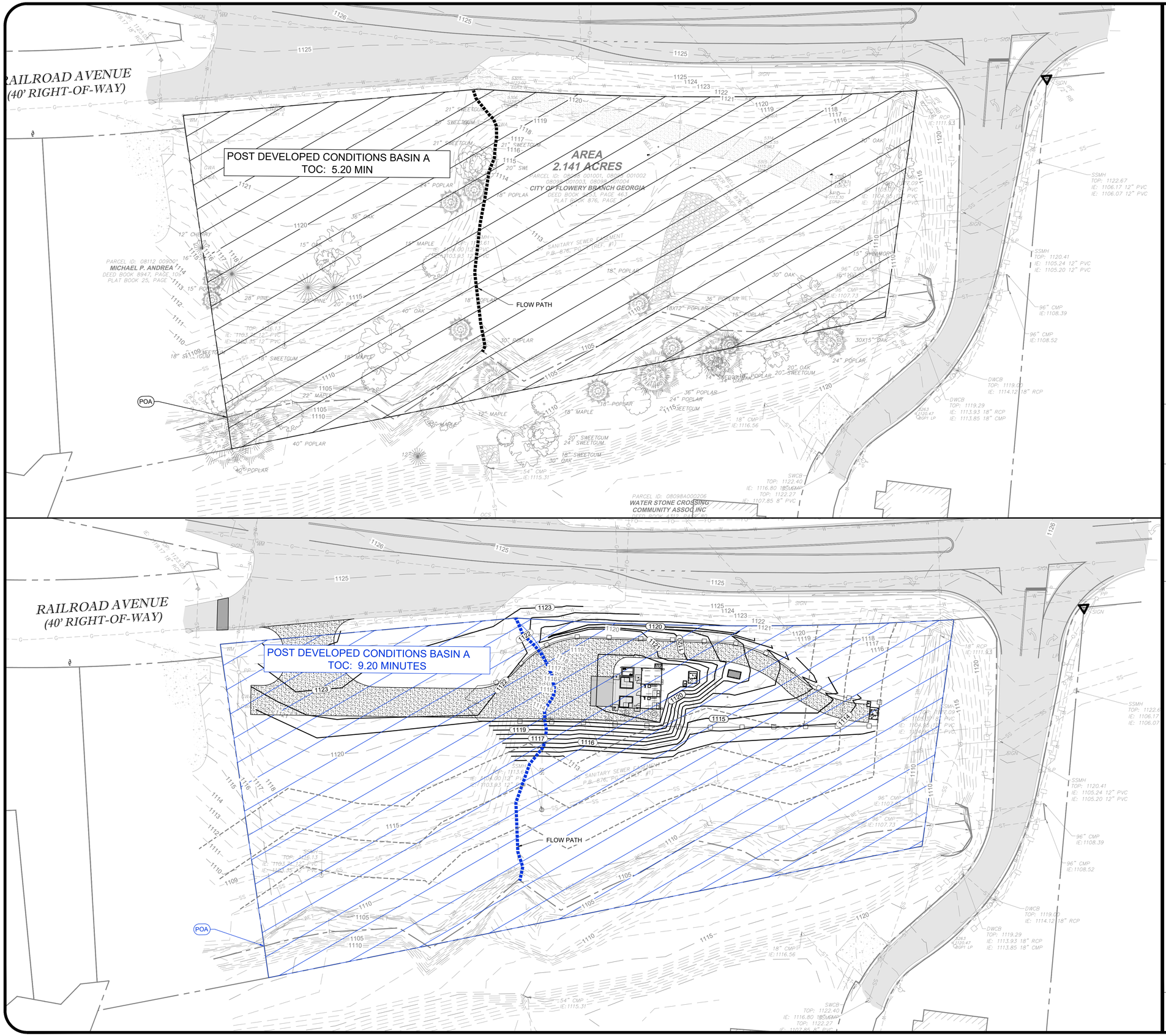

SITE INFORMATION

PROJECT ADDRESS	4745 ATLANTA HWY
PARCEL NUMBER	08098 001001 THRU 08098 001004
PARCEL ZONING	H-B
PROJECT AREA	2.14 ACRES
BUILDING SETBACK	
FRONT	NONE
REAR	30'
SIDE	10'
LANDSCAPE SETBACK	
FRONT	10'
REAR	30'
SIDE	NONE

SITE DRAINAGE DESCRIPTION:

THE PROPOSED DEVELOPMENT FOR THE CITY OF FLOWERY BRANCH, GEORGIA IS LOCATED AT 4745 ATLANTA HIGHWAY (SR13). THE PROJECT AREA CONSISTS OF 2.14 ACRES OF OPEN AREA. THE PRE-DEVELOPED CONDITION CONSIST OF ONE DRAINAGE BASIN. BASIN A SHEET FLOWS TOWARDS THE SOUTH AND DISCHARGES ALONG THE SOUTH PROPERTY LINE INTO THE CREEK. THE PROPOSED DEVELOPMENT WILL CONSIST OF ±1600 SQFT OF COVERED OUTDOOR SPACE AND WELL HOUSE BUILDING FOR THE REHABILITATION OF TWO WELLS PURCHASED BY FLOWERY BRANCH FROM THE STATE OF GEORGIA. THE WELL HOUSE BUILDING IS A THREE ROOM STRUCTURE WITH AN ATTACHED POLE BARN. THE WELL HOUSE BUILDING IS THREE SEPARATE ROOMS; ONE PIPE GALLERY AND THE REMAINING ROOMS SEPARATE CHEMICAL FEED ROOMS. A SMALL PORTION OF THE PROPERTY WILL HAVE ASPHALT FOR LOADING/UNLOADING. TWO SMALL CONCRETE BASINS WILL SUPPORT CHEMICAL STORAGE. THIS STRUCTURE IS UTILITARIAN IN NATURE. THE POST-DEVELOPED CONDITIONS CONSIST OF ONE DRAINAGE BASIN. BASIN "A" CONTINUES TO SHEET FLOW IN THE SAME PATTERN AS BEFORE BUT WITH A SLOWER RELEASE DO TO SUBTLER GRADE CHANGES ACROSS THE SITE. IT DRAINS TO THE SOUTH OF THE PROPERTY AND ENTERS THE CREEK IN THE SAME FASHION. THE POST DEVELOPED PROPERTY CONDITIONS REDUCES STORMWATER RUNOFF AS REQUIRED BY LOCAL AND/OR STATE STANDARDS AND REGULATIONS.

FLOODPLAIN DESCRIPTION:

THE PROPERTY SHOWN HEREON IS LOCATED IN FLOOD ZONE "X" AS PER FLOOD INSURANCE RATE MAP FOR CITY OF FLOWERY BRANCH 130408, AND SHOWN ON MAP NO. 13293C0089D. WITH AN EFFECTIVE DATE OF 09/25/2009. FLOOD ZONE "X" DENOTES AN AREA OF MINIMAL FLOOD HAZARD.

HYDROLOGIC BASIN DESCRIPTION:

PRE-DEVELOPED BASIN

BASIN A: 2.14 ACRES (69) - T_C: 5.20 MINS 25-YR PEAK RUNOFF: 9.93 CFS
- IMPERVIOUS AREA: 0.00 AC (HSG-B)
- OPEN AREA (GOOD CONDITION): 2.14 AC (HSG-B)
- WOODED AREA (GOOD COVER): 0.00 AC (HSG-B)

POST-DEVELOPED BASIN

BASIN A TO STORM SYSTEM 2.14 ACRES (61) - T_C: 9.20 MINS 25-YR PEAK RUNOFF: 6.84 CFS
- IMPERVIOUS AREA: 0.04 AC (HSG-B)
- OPEN AREA (GOOD CONDITION): 2.10 AC (HSG-B)
- WOODED AREA (GOOD COVER): 0.00 AC (HSG-B)

DISTURBED AREA NOTES

1. THE TOTAL PROJECT SITE IS 2.14 ACRES.
2. THE TOTAL ON-SITE DISTURBED AREA IS 0.92 ACRES (WELL SITE PROJECT).
3. THE TOTAL OFF-SITE DISTURBED AREA IS 0.14 ACRES (WATER MAIN EXTENSION.
4. THE TOTAL PROJECT DISTURBED AREA (INCLUDING ON- AND OFF-SITE AREAS) IS 1.06 ACRES.
5. DUE TO THE PROP. ESC MEASURES AND TYPE OF CONSTRUCTION BEING LINEAR, SHALLOW TRENCHING WORK, THE 0.14 ACRES OF "OFF-SITE" AREA IS NOT BEING CONSIDERED AS PART OF THE ON-SITE HYDROLOGY ANALYSIS DUE TO THE INFINITE NUMBER OF FLOW PATHS FOR RUNOFF LEAVING THIS AREA OF THE PROJECT. THEREFORE, THE TRUE "ON-SITE" DISTURBED AREA IS ONLY 0.92 ACRES AND DOES NOT REQUIRE WATER QUALITY MITIGATION MEASURES.

GRAPHIC SCALE 1" = 30'

GEORGIA811 www.Georgia811.com

ESG ENGINEERING
6400 Peake Rd
Macon, GA 31210
Ph: (478) 474-4996
Fax: (478) 474-5045

GROUNDWATER WELLS #4 & #5

FOR THE
CITY OF FLOWERY BRANCH

REVISIONS

NO.	DESCRIPTION	DATE
1	ESPC SHEETS	11-7-25
2	BID SET OF PLANS	12-1-25
3	REVISED WITH CITY COMMENTS	12-5-25

BID SET

GEORGIA REGISTERED No. PE046341 PROFESSIONAL ENGINEER ANDREW D SWICEGOOD

DRAWN BY: DSC
CHECKED BY: ADS
DATE: OCT 2025
SCALE: SEE SCALE

CONTENT:
CIVIL:
HYDROLOGY PLAN

SHEET NO: 4
C6.0

GENERAL NPDES PERMIT NO. GAR100001

30 A) PERMITTEE REQUIREMENTS.

(1). EACH DAY WHEN ANY TYPE OF CONSTRUCTION ACTIVITY HAS TAKEN PLACE AT A PRIMARY PERMITTEE'S SITE, CERTIFIED PERSONNEL PROVIDED BY THE PRIMARY PERMITTEE SHALL INSPECT: (A) ALL AREAS AT THE PRIMARY PERMITTEE'S SITE WHERE PETROLEUM PRODUCTS ARE STORED, USED, OR HANDLED FOR SPILLS AND LEAKS FROM VEHICLES AND EQUIPMENT AND (B) ALL LOCATIONS AT THE PRIMARY PERMITTEE'S SITE WHERE VEHICLES ENTER OR EXIT THE SITE FOR EVIDENCE OF OFF-SITE SEDIMENT TRACKING. THESE INSPECTIONS MUST BE CONDUCTED UNTIL A NOTICE OF TERMINATION IS SUBMITTED.

(2). MEASURE AND RECORD RAINFALL WITHIN DISTURBED AREAS OF THE SITE THAT HAVE NOT MET FINAL STABILIZATION ONCE EVERY 24 HOURS EXCEPT ANY NON-WORKING SATURDAY, NON-WORKING SUNDAY AND NON-WORKING FEDERAL HOLIDAY. THE DATA COLLECTED FOR THE PURPOSE OF COMPLIANCE WITH THIS PERMIT SHALL BE REPRESENTATIVE OF THE MONITORED ACTIVITY. MEASUREMENT OF RAINFALL MAY BE SUSPENDED IF ALL AREAS OF THE SITE HAVE UNDERGONE FINAL STABILIZATION OR ESTABLISHED A CROP OF ANNUAL VEGETATION AND A SEEDING OF TARGET PERENNIALS APPROPRIATE FOR THE REGION.

(3). CERTIFIED PERSONNEL (PROVIDED BY THE PRIMARY PERMITTEE) SHALL INSPECT THE FOLLOWING AT LEAST ONCE EVERY SEVEN (7) CALENDAR DAYS AND WITHIN 24 HOURS OF THE END OF A STORM THAT IS 0.5 INCHES RAINFALL OR GREATER (UNLESS SUCH STORM ENDS AFTER 5:00 PM ON ANY FRIDAY OR ON ANY NON-WORKING SATURDAY, NON-WORKING SUNDAY OR ANY NON-WORKING FEDERAL HOLIDAY IN WHICH CASE THE INSPECTION SHALL BE COMPLETED BY THE END OF THE NEXT BUSINESS DAY AND/OR WORKING DAY, WHICHEVER OCCURS FIRST): (A) DISTURBED AREAS OF THE PRIMARY PERMITTEE'S CONSTRUCTION SITE; (B) AREAS USED BY THE PRIMARY PERMITTEE FOR STORAGE OF MATERIALS THAT ARE EXPOSED TO PRECIPITATION; AND (C) STRUCTURALCONTROL MEASURES. EROSION AND SEDIMENT CONTROL MEASURES IDENTIFIED IN THE PLAN APPLICABLE TO THE PRIMARY PERMITTEE'S SITE SHALL BE OBSERVED TO ENSURE THAT THEY ARE OPERATING CORRECTLY. WHERE DISCHARGE LOCATIONS OR POINTS ARE ACCESSIBLE, THEY SHALL BE INSPECTED TO ASCERTAIN WHETHER EROSION CONTROL MEASURES ARE EFFECTIVE IN PREVENTING SIGNIFICANT IMPACTS TO RECEIVING WATER(S). FOR AREAS OF A SITE THAT HAVE UNDERGONE FINAL STABILIZATION OR ESTABLISHED A CROP OF ANNUAL VEGETATION AND A SEEDING OF TARGET PERENNIALS APPROPRIATE FOR THE REGION, THE PERMITTEE MUST COMPLY WITH PART IV.D.4.A.(4). THESE INSPECTIONS MUST BE CONDUCTED UNTIL A NOTICE OF TERMINATION IS SUBMITTED.

(4). CERTIFIED PERSONNEL (PROVIDED BY THE PRIMARY PERMITTEE) SHALL INSPECT AT LEAST ONCE PER MONTH DURING THE TERM OF THIS PERMIT (I.E., UNTIL A NOTICE OF TERMINATION HAS BEEN SUBMITTED) THE AREAS OF THE SITE THAT HAVE UNDERGONE FINAL STABILIZATION OR ESTABLISHED A CROP OF ANNUAL VEGETATION AND A SEEDING OF TARGET PERENNIALS APPROPRIATE FOR THE REGION. THESE AREAS SHALL BE INSPECTED FOR EVIDENCE OF, OR THE POTENTIAL FOR, POLLUTANTS ENTERING THE DRAINAGE SYSTEM AND THE RECEIVING WATER(S). EROSION AND SEDIMENT CONTROL MEASURES IDENTIFIED IN THE PLAN SHALL BE OBSERVED TO ENSURE THAT THEY ARE OPERATING CORRECTLY. WHERE DISCHARGE LOCATIONS OR POINTS ARE ACCESSIBLE, THEY SHALL BE INSPECTED TO ASCERTAIN WHETHER EROSION CONTROL MEASURES ARE EFFECTIVE IN PREVENTING SIGNIFICANT IMPACTS TO RECEIVING WATER(S).

(5). BASED ON THE RESULTS OF EACH INSPECTION, THE SITE DESCRIPTION AND THE POLLUTION PREVENTION AND CONTROL MEASURES IDENTIFIED IN THE EROSION, SEDIMENTATION AND POLLUTION CONTROL PLAN, THE PLAN SHALL BE REVISED AS APPROPRIATE NOT LATER THAN SEVEN (7) CALENDAR DAYS FOLLOWING EACH INSPECTION. IMPLEMENTATION OF SUCH CHANGES SHALL BE MADE AS SOON AS PRACTICAL BUT IN NO CASE LATER THAN SEVEN (7) CALENDAR DAYS FOLLOWING EACH INSPECTION.

(6). A REPORT OF EACH INSPECTION THAT INCLUDES THE NAME(S) OF CERTIFIED PERSONNEL MAKING EACH INSPECTION, THE DATE(S) OF EACH INSPECTION, CONSTRUCTION PHASE (I.E., INITIAL, INTERMEDIATE OR FINAL), MAJOR OBSERVATIONS RELATING TO THE IMPLEMENTATION OF THE EROSION, SEDIMENTATION AND POLLUTION CONTROL PLAN, AND ACTIONS TAKEN IN ACCORDANCE WITH PART IV.D.4.A.(5). OF THE PERMIT SHALL BE MADE AND RETAINED AT THE SITE OR BE READILY AVAILABLE AT A DESIGNATED ALTERNATE LOCATION UNTIL THE ENTIRE SITE OR THAT PORTION OF A CONSTRUCTION SITE THAT HAS BEEN PHASED HAS UNDERGONE FINAL STABILIZATION AND A NOTICE OF TERMINATION IS SUBMITTED TO EPD. SUCH REPORTS SHALL BE READILY AVAILABLE BY END OF THE SECOND BUSINESS DAY AND/OR WORKING DAY AND SHALL IDENTIFY ALL INCIDENTS OF BEST MANAGEMENT PRACTICES THAT HAVE NOT BEEN PROPERLY INSTALLED AND/OR MAINTAINED AS DESCRIBED IN THE PLAN. WHERE THE REPORT DOES NOT IDENTIFY ANY INCIDENTS, THE INSPECTION REPORT SHALL CONTAIN A CERTIFICATION THAT THE BEST MANAGEMENT PRACTICES ARE IN COMPLIANCE WITH THE EROSION, SEDIMENTATION AND POLLUTION CONTROL PLAN. THE REPORT SHALL BE SIGNED IN ACCORDANCE WITH PART V.G.2. OF THIS PERMIT.

5. MAINTENANCE. THE PLAN SHALL INCLUDE A DESCRIPTION OF PROCEDURES TO ENSURE THE TIMELY MAINTENANCE OF VEGETATION, EROSION AND SEDIMENT CONTROL MEASURES AND OTHER PROTECTIVE MEASURES IDENTIFIED IN THE SITE PLAN.

33 6. SAMPLING REQUIREMENTS. THIS PERMIT REQUIRES THE MONITORING OF NEPHELOMETRIC TURBIDITY IN RECEIVING WATER(S) OR OUTFALLS IN ACCORDANCE WITH THIS PERMIT. THIS PARAGRAPH SHALL NOT APPLY TO ANY LAND DISTURBANCE ASSOCIATED WITH THE CONSTRUCTION OF SINGLE-FAMILY HOMES WHICH ARE NOT PART OF A SUBDIVISION OR PLANNED COMMON DEVELOPMENT UNLESS FIVE (5) ACRES OR MORE WILL BE DISTURBED. THE FOLLOWING PROCEDURES CONSTITUTE EPD'S GUIDELINES FOR SAMPLING TURBIDITY.

a. SAMPLING REQUIREMENTS SHALL INCLUDE THE FOLLOWING:

(1). A USGS TOPOGRAPHIC MAP, A TOPOGRAPHIC MAP OR A DRAWING (REFERRED TO AS A TOPOGRAPHIC MAP) THAT IS A SCALE EQUAL TO OR MORE DETAILED THAN A 1:24000 MAP SHOWING THE LOCATION OF THE SITE OR THE STAND ALONE CONSTRUCTION; (A) THE LOCATION OF ALL PERENNIAL AND INTERMITTENT STREAMS AND OTHER WATER BODIES AS SHOWN ON A USGS TOPOGRAPHIC MAP, AND ALL OTHER PERENNIAL AND INTERMITTENT STREAMS AND OTHER WATER BODIES LOCATED DURING MANDATORY FIELD VERIFICATION, INTO WHICH THE STORMWATER IS DISCHARGED AND (B) THE RECEIVING WATER AND/OR OUTFALL SAMPLING LOCATIONS. WHEN THE PERMITTEE HAS CHOSEN TO USE A USGS TOPOGRAPHIC MAP AND THE RECEIVING WATER(S) IS NOT SHOWN ON THE USGS TOPOGRAPHIC MAP, THE LOCATION OF THERECEIVING WATER(S) MUST BE HAND-DRAWN ON THE USGS TOPOGRAPHIC MAP FROM WHERE THE STORMWATER(S) ENTERS THE RECEIVING WATER(S) TO THE POINT WHERE THE RECEIVING WATER(S) COMBINES WITH THE FIRST BLUE LINE STREAM SHOWN ON THE USGSTOPOGRAPHIC MAP;

(2). A WRITTEN NARRATIVE OF SITE SPECIFIC ANALYTICAL METHODS USED TO COLLECT, HANDLE AND ANALYZE THE SAMPLES INCLUDING QUALITY CONTROL/QUALITY ASSURANCE PROCEDURES. THIS NARRATIVE MUST INCLUDE PRECISE SAMPLING METHODOLOGY FOR EACH SAMPLING LOCATION;

(3). WHEN THE PERMITTEE HAS DETERMINED THAT SOME OR ALL OUTFALLS WILL BE SAMPLED, A RATIONALE MUST BE INCLUDED ON THE PLAN FOR THE NTU LIMIT(S) SELECTED FROM APPENDIX B. THIS RATIONALE MUST INCLUDE THE SIZE OF THE CONSTRUCTION SITE, THE CALCULATION OF THE SIZE OF THE SURFACE WATER DRAINAGE AREA, AND THE TYPE OF RECEIVING WATER(S) (I.E., TROUT STREAM OR SUPPORTING WARM WATER FISHERIES); AND

(4). ANY ADDITIONAL INFORMATION EPD DETERMINES NECESSARY TO BE PART OF THE PLAN. EPD WILL PROVIDE WRITTEN NOTICE TO THE PERMITTEE OF THE INFORMATION NECESSARY AND THE TIME LINE FOR SUBMITTAL.

b. SAMPLE TYPE. ALL SAMPLING SHALL BE COLLECTED BY "GRAB SAMPLES" AND THE ANALYSIS OF THESE SAMPLES MUST BE CONDUCTED IN ACCORDANCE WITH METHODOLOGY AND TEST PROCEDURES ESTABLISHED BY 40 CFR PART 136 (UNLESS OTHER TEST PROCEDURES HAVE BEEN APPROVED); THE GUIDANCE DOCUMENT TITLED "NPDES STORM WATER SAMPLING GUIDANCE DOCUMENT,EPA 833-B-92-001" AND GUIDANCE DOCUMENTS THAT MAY BE PREPARED BY THE EPD.

(1). SAMPLE CONTAINERS SHOULD BE LABELED PRIOR TO COLLECTING THE SAMPLES.

(2). SAMPLES SHOULD BE WELL MIXED BEFORE TRANSFERRING TO A SECONDARY CONTAINER.

(3). LARGE MOUTH, WELL CLEANED AND RINSED GLASS OR PLASTIC JARS SHOULD BE USED FOR COLLECTING SAMPLES. THE JARS SHOULD BE CLEANED THOROUGHLY TO AVOID CONTAMINATION.

(4). MANUAL, AUTOMATIC OR RISING STAGE SAMPLING MAY BE UTILIZED. SAMPLES REQUIRED BY THIS PERMIT SHOULD BE ANALYZED IMMEDIATELY, BUT IN NO CASE LATER THAN 48 HOURS AFTER COLLECTION. HOWEVER, SAMPLES FROM AUTOMATIC SAMPLERS MUST BE COLLECTED NO LATER THAN THE NEXT BUSINESS DAY AFTER THEIR ACCUMULATION, UNLESS FLOW THROUGH AUTOMATED ANALYSIS IS UTILIZED. IF AUTOMATIC SAMPLING IS UTILIZED AND THE AUTOMATIC SAMPLER IS NOT ACTIVATED DURING THE QUALIFYING EVENT, THE PERMITTEE MUST UTILIZE MANUAL SAMPLING OR RISING STAGE SAMPLING DURING THE NEXT QUALIFYING EVENT. DILUTION OF SAMPLES IS NOT REQUIRED. SAMPLES MAY BE ANALYZED DIRECTLY WITH A PROPERLY CALIBRATED TURBIDIMETER. SAMPLES ARE NOT REQUIRED TO BE COOLED.

(5). SAMPLING AND ANALYSIS OF THE RECEIVING WATER(S) OR OUTFALLS BEYOND THE MINIMUM FREQUENCY STATED IN THIS PERMIT MUST BE REPORTED TO EPD AS SPECIFIED IN PART IV.E.

c. SAMPLING POINTS.

(1). FOR CONSTRUCTION ACTIVITIES THE PRIMARY PERMITTEE MUST SAMPLE ALL RECEIVING WATER(S), OR ALL OUTFALL(S), OR A COMBINATION OF RECEIVING WATER(S) AND OUTFALL(S). SAMPLES TAKEN FOR THE PURPOSE OF COMPLIANCE WITH THIS PERMIT SHALL BE REPRESENTATIVE OF THE MONITORED ACTIVITY AND REPRESENTATIVE OF THE WATER QUALITY OF THE RECEIVING WATER(S) AND/OR THE STORMWATER OUTFALLS USING THE FOLLOWING MINIMUM GUIDELINES:

(A). THE UPSTREAM SAMPLE FOR EACH RECEIVING WATER(S) MUST BE TAKEN IMMEDIATELY UPSTREAM OF THE CONFLUENCE OF THE FIRST STORMWATER DISCHARGE FROM THE PERMITTED ACTIVITY (I.E., THE DISCHARGE FARTHEST UPSTREAM AT THE SITE) BUT DOWNSTREAM OF ANY OTHER STORMWATER DISCHARGES NOT ASSOCIATED WITH THE PERMITTED ACTIVITY. WHERE APPROPRIATE, SEVERAL UPSTREAM SAMPLES FROM ACROSS THE RECEIVING WATER(S) MAY NEED TO BE TAKEN AND THE ARITHMETIC AVERAGE OF THE TURBIDITY OF THESE SAMPLES USED FOR THE UPSTREAM TURBIDITY

(B). THE DOWNSTREAM SAMPLE FOR EACH RECEIVING WATER(S) MUST BE TAKEN DOWNSTREAM OF THE CONFLUENCE OF THE LAST STORMWATER DISCHARGE FROM THE PERMITTED ACTIVITY (I.E., THE DISCHARGE FARTHEST DOWNSTREAM AT THE SITE) BUT UPSTREAM OF ANY OTHER STORMWATER DISCHARGE NOT ASSOCIATED WITH THE PERMITTED ACTIVITY. WHERE APPROPRIATE, SEVERAL DOWNSTREAM SAMPLES FROM ACROSS THE RECEIVING WATER(S) MAY NEED TO BE TAKEN AND THE ARITHMETIC AVERAGE OF THE TURBIDITY OF THESE SAMPLES USED FOR THE DOWNSTREAM TURBIDITY VALUE.

(C). IDEALLY THE SAMPLES SHOULD BE TAKEN FROM THE HORIZONTAL AND VERTICAL CENTER OF THE RECEIVING WATER(S) OR THE STORMWATER OUTFALL CHANNEL(S).

(D). CARE SHOULD BE TAKEN TO AVOID STIRRING THE BOTTOM SEDIMENTS IN THE RECEIVING WATER(S) OR IN THE OUTFALL STORMWATER CHANNEL.

(E). THE SAMPLING CONTAINER SHOULD BE HELD SO THAT THE OPENING FACES UPSTREAM.

(F). THE SAMPLES SHOULD BE KEPT FREE FROM FLOATING DEBRIS.

(G). PERMITTEES DO NOT HAVE TO SAMPLE SHEET FLOW THAT FLOWS ONTO UNDISTURBED NATURAL AREAS OR AREAS STABILIZED BY THE PROJECT. FOR PURPOSES OF THIS SECTION, STABILIZED SHALL MEAN, FOR UNPAVED AREAS AND AREAS NOT COVERED BY PERMANENT STRUCTURES AND AREAS LOCATED OUTSIDE THE WASTE DISPOSAL LIMITS OF A LANDFILL CELL THAT HAS BEEN CERTIFIED BY EPD FOR WASTE DISPOSAL, 100% OF THE SOIL SURFACE IS UNIFORMLY COVERED IN PERMANENT VEGETATION WITH A DENSITY OF 70% OR GREATER, OR LANDSCAPED ACCORDING TO THE PLAN (UNIFORMLY COVERED WITH LANDSCAPING MATERIALS IN PLANNED LANDSCAPED AREAS), OR EQUIVALENT PERMANENT STABILIZATION MEASURES AS DEFINED IN THE MANUAL (EXCLUDING A CROP OF ANNUAL VEGETATION AND A SEEDING OF TARGET CROP PERENNIALS APPROPRIATE FOR THE REGION).

(H). ALL SAMPLING PURSUANT TO THIS PERMIT MUST BE DONE IN SUCH A WAY (INCLUDING GENERALLY ACCEPTED SAMPLING METHODS, LOCATIONS, TIMING, AND FREQUENCY) AS TO ACCURATELY REFLECT WHETHER STORMWATER RUNOFF FROM THE CONSTRUCTION SITE IS IN COMPLIANCE WITH THE STANDARD SET FORTH IN PARTS OR III.D.4., WHICHEVER IS APPLICABLE.

31 d. SAMPLING FREQUENCY.

(1). THE PRIMARY PERMITTEE MUST SAMPLE IN ACCORDANCE WITH THE PLAN AT LEAST ONCE FOR EACH RAINFALL EVENT DESCRIBED BELOW. FOR A QUALIFYING EVENT, THE PERMITTEE SHALL SAMPLE AT THE BEGINNING OF ANY STORMWATER DISCHARGE TO A MONITORED RECEIVING WATER AND/OR FROM A MONITORED OUTFALL LOCATION WITHIN IN FORTY-FIVE (45) MINUTES OR AS SOON AS POSSIBLE.

(2). HOWEVER, WHERE MANUAL AND AUTOMATIC SAMPLING ARE IMPOSSIBLE (AS DEFINED IN THIS PERMIT), OR ARE BEYOND THE PERMITTEE'S CONTROL, THE PERMITTEE SHALL TAKE SAMPLES AS SOON AS POSSIBLE, BUT IN NO CASE MORE THAN TWELVE (12) HOURS AFTER THE BEGINNING OF THE STORMWATER DISCHARGE.

(3). SAMPLING BY THE PERMITTEE SHALL OCCUR FOR THE FOLLOWING QUALIFYING EVENTS:

(A). FOR EACH AREA OF THE SITE THAT DISCHARGES TO A RECEIVING WATER OR FROM AN OUTFALL, THE FIRST RAIN EVENT THAT REACHES OR EXCEEDS 0.5 INCH WITH A STORMWATER DISCHARGE THAT OCCURS DURING NORMAL BUSINESS HOURS AS DEFINED IN THIS PERMIT AFTER ALL CLEARING AND GRUBBING OPERATIONS HAVE BEEN COMPLETED, BUT PRIOR TO COMPLETION OF MASS GRADING OPERATIONS, IN THE DRAINAGE AREA OF THE LOCATION SELECTED AS THE SAMPLING LOCATION;

(B). IN ADDITION TO (A) ABOVE, FOR EACH AREA OF THE SITE THAT DISCHARGES TO A RECEIVING WATER OR FROM AN OUTFALL, THE FIRST RAIN EVENT THAT REACHES OR EXCEEDS 0.5 INCH WITH A STORMWATER DISCHARGE THAT OCCURS DURING NORMAL BUSINESS HOURS AS DEFINED IN THIS PERMIT EITHER 30 DAYS AFTER THE FIRST SAMPLING EVENT OR AFTER ALL MASS GRADING OPERATIONS HAVE BEEN COMPLETED, BUT PRIOR TO SUBMITTAL OF A NOT, IN THE DRAINAGE AREA OF THE LOCATION SELECTED AS THE SAMPLING LOCATION, WHICHEVER COMES FIRST;

(C). AT THE TIME OF SAMPLING PERFORMED PURSUANT TO (A) AND (B) ABOVE, IF BMPS IN ANY AREA OF THE SITE THAT DISCHARGES TO A RECEIVING WATER OR FROM AN OUTFALL ARE NOT PROPERLY DESIGNED, INSTALLED AND MAINTAINED, CORRECTIVE ACTION SHALL BE DEFINED AND IMPLEMENTED WITHIN TWO (2) BUSINESS DAYS, AND TURBIDITY SAMPLES SHALL BE TAKEN FROM DISCHARGES FROM THAT AREA OF THE SITE FOR EACH SUBSEQUENT RAIN EVENT THAT REACHES OR EXCEEDS 0.5 INCH DURING NORMAL BUSINESS HOURS* UNTIL THE SELECTED TURBIDITY STANDARD IS ATTAINED, OR UNTIL POST-STORM EVENT INSPECTIONS DETERMINE THAT BMPS ARE PROPERLY DESIGNED, INSTALLED AND MAINTAINED;

(D). WHERE SAMPLING PURSUANT TO (A), (B) OR (C) ABOVE IS REQUIRED BUT NOT POSSIBLE (OR NOT REQUIRED BECAUSE THERE WAS NO DISCHARGE), THE PERMITTEE, IN ACCORDANCE WITH PART IV.D.4.A.(6), MUST INCLUDE A WRITTEN JUSTIFICATION IN THE INSPECTION REPORT OF WHY SAMPLING WAS NOT PERFORMED. PROVIDING THIS JUSTIFICATION DOES NOT RELIEVE THE PERMITTEE OF ANY SUBSEQUENT SAMPLING OBLIGATIONS UNDER (A), (B) OR (C) ABOVE; AND

(E). EXISTING CONSTRUCTION ACTIVITIES, I.E., THOSE THAT ARE OCCURRING ON OR BEFORE THE EFFECTIVE DATE OF THIS PERMIT, THAT HAVE MET THE SAMPLING REQUIRED BY (A) ABOVE SHALL SAMPLE IN ACCORDANCE WITH (B). THOSE EXISTING CONSTRUCTION ACTIVITIES THAT HAVE MET THE SAMPLING REQUIRED BY (B) ABOVE SHALL NOT BE REQUIRED TO CONDUCT ADDITIONAL SAMPLING OTHER THAN AS REQUIRED BY (C) ABOVE.

*NOTE THAT THE PERMITTEE MAY CHOOSE TO MEET THE REQUIREMENTS OF (A) AND ABOVE BY COLLECTING TURBIDITY SAMPLES FROM ANY RAIN EVENT THAT REACHES OR EXCEEDS 0.5 INCH AND ALLOWS FOR SAMPLING AT ANY TIME OF THE DAY OR WEEK.

7. NON-STORMWATER DISCHARGES. EXCEPT FOR FLOWS FROM FIRE FIGHTING ACTIVITIES, SOURCES OF NON-STORMWATER LISTED IN PART III.A.2. OF THIS PERMIT THAT ARE COMBINED WITH STORMWATER DISCHARGES ASSOCIATED WITH CONSTRUCTION ACTIVITY MUST BE IDENTIFIED IN THE PLAN. THE PLAN SHALL IDENTIFY AND ENSURE THE IMPLEMENTATION OF APPROPRIATE POLLUTION PREVENTION MEASURES FOR THE NON-STORMWATER COMPONENT(S) OF THE DISCHARGE.

E. REPORTING.

1. THE APPLICABLE PERMITTEES ARE REQUIRED TO SUBMIT THE SAMPLING RESULTS TO THE EPD AT THE ADDRESS SHOWN IN PART II.C. BY THE FIFTEENTH DAY OF THE MONTH FOLLOWING THE REPORTING PERIOD. REPORTING PERIODS ARE MONTHS DURING WHICH SAMPLES ARE TAKEN IN ACCORDANCE WITH THIS PERMIT. SAMPLING RESULTS SHALL BE IN A CLEARLY LEGIBLE FORMAT. UPON WRITTEN NOTIFICATION, EPD MAY REQUIRE THE APPLICABLE PERMITTEE TO SUBMIT THE SAMPLING RESULTS ON A MORE FREQUENT BASIS. SAMPLING AND ANALYSIS OF ANY STORMWATER DISCHARGE(S) OR THE RECEIVING WATER(S) BEYOND THE MINIMUM FREQUENCY STATED IN THIS PERMIT MUST BE REPORTED IN A SIMILAR MANNER TO THE EPD. THE SAMPLING REPORTS MUST BE SIGNED IN ACCORDANCE WITH PART V.G.2. SAMPLING REPORTS MUST BE SUBMITTED TO EPD USING THE ELECTRONIC SUBMITTAL SERVICE PROVIDED BY EPD. SAMPLING REPORTS MUST BE SUBMITTED TO EPD UNTIL SUCH TIME AS A NOT IS SUBMITTED IN ACCORDANCE WITH PART VI.

2. ALL SAMPLING REPORTS SHALL INCLUDE THE FOLLOWING INFORMATION:

a. THE RAINFALL AMOUNT, DATE, EXACT PLACE AND TIME OF SAMPLING OR MEASUREMENTS;
b. THE NAME(S) OF THE CERTIFIED PERSONNEL WHO PERFORMED THE SAMPLING AND MEASUREMENTS;
c. THE DATE(S) ANALYSES WERE PERFORMED;
d. THE TIME(S) ANALYSES WERE INITIATED;
e. THE NAME(S) OF THE CERTIFIED PERSONNEL WHO PERFORMED THE ANALYSES;
f. REFERENCES AND WRITTEN PROCEDURES, WHEN AVAILABLE, FOR THE ANALYTICAL TECHNIQUES OR METHODS USED;
g. THE RESULTS OF SUCH ANALYSES, INCLUDING THE BENCH SHEETS, INSTRUMENT READOUTS, COMPUTER DISKS OR TAPES, ETC., USED TO DETERMINE THESE RESULTS;
h. RESULTS WHICH EXCEED 1000 NTU SHALL BE REPORTED AS "EXCEEDS 1000 NTU;" AND
i. CERTIFICATION STATEMENT THAT SAMPLING WAS CONDUCTED AS PER THE PLAN.

3. ALL WRITTEN CORRESPONDENCE REQUIRED BY THIS PERMIT SHALL BE SUBMITTED BY RETURN RECEIPT CERTIFIED MAIL (OR SIMILAR SERVICE) TO THE APPROPRIATE DISTRICT OFFICE OF THE EPD ACCORDING TO THE SCHEDULE IN APPENDIX A OF THIS PERMIT. THE PERMITTEE SHALL RETAIN A COPY OF THE PROOF OF SUBMITTAL AT THE CONSTRUCTION SITE OR THE PROOF OF SUBMITTAL SHALL BE READILY AVAILABLE AT A DESIGNATED LOCATION FROM COMMENCEMENT OF CONSTRUCTION UNTIL SUCH TIME AS A NOT IS SUBMITTED IN ACCORDANCE WITH PART VI.

32 F. RETENTION OF RECORDS.

1. THE PRIMARY PERMITTEE SHALL RETAIN THE FOLLOWING RECORDS AT THE CONSTRUCTION SITE OR THE RECORDS SHALL BE READILY AVAILABLE AT A DESIGNATED ALTERNATE LOCATION FROM COMMENCEMENT OF CONSTRUCTION UNTIL SUCH TIME AS A NOT IS SUBMITTED IN ACCORDANCE WITH PART VI:

a. A COPY OF ALL NOTICES OF INTENT SUBMITTED TO EPD;
b. A COPY OF THE EROSION, SEDIMENTATION AND POLLUTION CONTROL PLAN REQUIRED BY THIS PERMIT;
c. THE DESIGN PROFESSIONAL'S REPORT OF THE RESULTS OF THE INSPECTION CONDUCTED IN ACCORDANCE WITH PART IV.A.5. OF THIS PERMIT;
d. A COPY OF ALL SAMPLING INFORMATION, RESULTS, AND REPORTS REQUIRED BY THIS PERMIT;
e. A COPY OF ALL INSPECTION REPORTS GENERATED IN ACCORDANCE WITH PART IV.D.4.A. OF THIS PERMIT;
f. A COPY OF ALL VIOLATION SUMMARIES AND VIOLATION SUMMARY REPORTS GENERATED IN ACCORDANCE WITH PART III.D.2. OF THIS PERMIT; AND
g. DAILY RAINFALL INFORMATION COLLECTED IN ACCORDANCE WITH PART IV.D.4.A.(2). OF THIS PERMIT.

2. COPIES OF ALL NOTICES OF INTENT, NOTICES OF TERMINATION, INSPECTION REPORTS, SAMPLING REPORTS (INCLUDING ALL CALIBRATION AND MAINTENANCE RECORDS AND ALL ORIGINAL STRIP CHART RECORDINGS FOR CONTINUOUS MONITORING INSTRUMENTATION) OR OTHER REPORTS REQUESTED BY THE EPD, EROSION, SEDIMENTATION AND POLLUTION CONTROL PLANS, RECORDS OF ALL DATA USED TO COMPLETE THE NOTICE OF INTENT TO BE COVERED BY THIS PERMIT AND ALL OTHER RECORDS REQUIRED BY THIS PERMIT SHALL BE RETAINED BY THE PERMITTEE WHO EITHER PRODUCED OR USED IT FOR A PERIOD OF AT LEAST THREE YEARS FROM THE DATE THAT THE NOT IS SUBMITTED IN ACCORDANCE WITH PART VI. OF THIS PERMIT. THESE RECORDS MUST BE MAINTAINED AT THE PERMITTEE'S PRIMARY PLACE OF BUSINESS OR AT A DESIGNATED ALTERNATIVE LOCATION ONCE THE CONSTRUCTION ACTIVITY HAS CEASED AT THE PERMITTED SITE. THIS PERIOD MAY BE EXTENDED BY REQUEST OF THE EPD AT ANY TIME UPON WRITTEN NOTIFICATION TO THE PERMITTEE.

GROUNDWATER WELL RESTORATION

APPENDIX 1

THE ES&PC PLAN MUST INCLUDE AT LEAST FOUR (4) OF THE FOLLOWING BMPS FOR THOSE AREAS OF THE SITE WHICH DISCHARGE TO AN IMPAIRED STREAM SEGMENT AND FOR SITES WHICH EPD HAS APPROVED IN WRITING A REQUEST TO DISTURB 50 ACRES OR MORE AT ANY ONE TIME.

The four items chosen must be appropriate for the site conditions.

Plan Page #	Included Y/N	
	N	a. During construction activities, double the width of the 25-foot undisturbed vegetated buffer along all State waters requiring a buffer and the 50-foot undisturbed vegetated buffer along all State waters classified as "trout streams" requiring a buffer. During construction activities, EPD will not grant variances to any such buffers that are increased in width.
	N	b. Increase all temporary sediment basins and retrofitted storm water management basins to provide sediment storage of at least 3600 cubic feet (134 cubic yards) per acre drained.
	N	c. Use baffles in all temporary sediment basins and retrofitted storm water management basins to at least double the conventional flow path length to the outlet structure.
	N	d. A large sign (minimum 4 feet x 8 feet) must be posted on site by the actual start date of construction. The sign must be visible from a public roadway. The sign must identify the following: (1) construction site, (2) the permittee(s), (3) the contact person(s) and telephone number(s), and (4) the permittee-hosted website where the Plan can be viewed must be provided on the submitted NOI. The sign must remain on site and the Plan must be available on the provided website until a NOT has been submitted.
C8.0	Y	e. Use tackifiers and/or mulch to stabilize areas left disturbed for more than seven (7) calendar days in accordance with **Part III. D.1.** of the current NPDES Permits.
	N	f. Conduct turbidity sampling after every rain event of 0.5 inch or greater within any 24-hour period, recognizing the exceptions specified in **Part IV.D.6.d.** of the current NPDES Permits.
	N	g. Comply with the applicable end-of-pipe turbidity effluent limit, without the "BMP defense" as provided for in O.C.G.A. 12-7-6 (a)(1).
C8.0	Y	h. Reduce the total planned site disturbance to less than 50% impervious surfaces (excluding any State-mandated buffer areas from such calculations). All calculations must be included on the Plan.
C8.0	Y	i. Limit the amount of disturbed area at any one time to no greater than 25 acres or 50% of the total planned site, whichever is less. All calculations must be included on the Plan.
	N	j. Use "Dirt II" techniques available on the EPD website to model and manage construction storm water runoff (including sheet flow). All calculations must be included on the Plan. (https://epd.georgia.gov/erosion-and-sedimentation)
	N	k. Conduct soil tests representative of conditions at the time of planting to identify and to implement site-specific fertilizer needs and/or add appropriate organic soil amendments (e.g., compost) and conduct pre- and post-construction soil sampling to a depth of six (6) inches to document improved levels of soil carbon after final stabilization of the construction site.
	N	l. Use mulch filter berms, in addition to a silt fence, on the site perimeter wherever construction storm water (including sheet flow) may be discharged. Mulch filter berms cannot be placed in waterways or areas of concentrated flow.
	N	m. Use appropriate erosion control slope stabilization instead of concrete in all construction storm water ditches and storm drainages designed for a 25-year, 24-hour rainfall event.
	N	n. Use flocculants or coagulants under a passive dosing method (e.g., flocculant blocks) within construction storm water ditches and storm drainages that feed into temporary sediment basins and retrofitted management basins.
	N	o. Install sod for a minimum 20-foot width (in lieu of seeding) after final grade has been achieved, along the site perimeter wherever storm water (including sheet flow) may be discharged.
	N	p. Conduct soil tests to identify and to implement site-specific fertilizer needs
	N	q. Certified personnel for primary permittees shall conduct inspections at least twice every seven (7) calendar days and within 24 hours of the end of the storm that is 0.5 inches rainfall or greater in accordance with **Part IV.D.4.a.(3)(a) – (c)**; secondary permittees, **Part IV.D.4.b.(3)(a) – (c)**; and tertiary permittees **Part IV.D.4.c.(3)(a) – (c)** *
	N	r. Apply the appropriate compost blankets (minimum depth 1.5 inches) to protect soil surfaces until vegetation is established during the final stabilization phase of the construction activity.
	N	s. Use alternative BMPs whose performance has been documented to be superior to conventional BMPs as certified by a Design Professional (unless disapproved by EPD or the Georgia Soil and Water Conservation Commission). (If using this item please refer to the Alternative BMP guidance document found at www.gaswcc.georgia.gov)
C8.0	Y	t. Limit the total planned site disturbance to less than 15% impervious surfaces (excluding any state mandated buffer areas from such calculations). All calculations must be included in the Plan.
	N	u. Conduct inspections during the intermediate grading and drainage BMP phase and during the final BMP phase of the project by the design professional who prepared the Plan in accordance with **Part IV.A.5** of the permit. The Plan must include a statement that the primary permittee must retain the design professional who prepared the Plan to conduct inspections during the intermediate grading and drainage BMP phase and during the final BMP phase.
	N	v. Install Post Construction BMPs (e.g., runoff reduction BMPs) which remove 80% TSS as outlined in the Georgia Stormwater Management Manual known as the Blue Book or an equivalent or more stringent design manual.

Effective January 1, 2025

* This requirement is different for infrastructure projects:
Certified personnel for primary permittees shall conduct inspections at least once every seven (7) calendar days and within 24 hours of the end of the storm that is 0.5 inches rainfall or greater in accordance with Part IV.D.4.a.(3)(a) – (c) of the permit.

GSWCC GEORGIA SOIL AND WATER CONSERVATION COMMISSION
Delmas S Crisp III
LEVEL II CERTIFIED DESIGN PROFESSIONAL
CERTIFICATION NUMBER: 0000100336
ISSUED: 11/08/2025 EXPIRES: 11/08/2028

1 **EROSION, SEDIMENTATION & POLLUTION CONTROL PLAN CHECKLIST**
STAND ALONE CONSTRUCTION PROJECTS
SWCD: CENTRAL GEORGIA

Project Name: GROUNDWATER WELLS #4 & #5 **Address:** 4745 ATLANTA HIGHWAY
City/County: HALL COUNTY, FLOWERY BRANCH, GA **Date on Plans:** OCT 2025
Name & email of person filling out checklist: DELMAS S. CRISP - trey.crisp@esgengineering.com

Plan Included Page #	Y/N	TO BE SHOWN ON ES&PC PLAN
C7.0	Y	1 The applicable Erosion, Sedimentation and Pollution Control Plan Checklist established by the Commission as of January 1 of the year in which the land-disturbing activity was permitted. (The completed Checklist must be submitted with the ES&PC Plan or the Plan will not be reviewed).
ALL	Y	2 Level II certification number issued by the Commission, signature and seal of the certified design professional. (Signature, seal and Level II number must be on each sheet pertaining to ES&PC plan or the Plan will not be reviewed).
C8.0	Y	3 Limits of distur

(4) 24-HOUR EMERGENCY CONTACT:
TREY CRISP
PHONE: 478-335-4612

(5) PRIMARY PERMITTEE:

CITY OF FLOWERY BRANCH
5410 PINE STREET
FLOWERY BRANCH, GA 30542
PHONE: 770-967-6371

GSWCC GEORGIA SOIL AND WATER CONSERVATION COMMISSION

Delmas S Crisp III
LEVEL II CERTIFIED DESIGN PROFESSIONAL

CERTIFICATION NUMBER: 0000100336
ISSUED: 11/06/2025 EXPIRES: 11/06/2028

ES&PC NOTES:

(26) (27) 1. FOR BUILDING MATERIALS, BUILDING PRODUCTS, CONSTRUCTION WASTES, TRASH, LANDSCAPE MATERIALS, FERTILIZERS, PESTICIDES, HERBICIDES, DETERGENTS, SANITARY WASTE AND OTHER MATERIALS PRESENT ON THE SITE, PROVIDE COVER (E.G. PLASTIC SHEETING, TEMPORARY ROOFS) TO MINIMIZE THE EXPOSURE OF THESE PRODUCTS TO PRECIPITATION AND TO STORMWATER, OR A SIMILARLY EFFECTIVE MEANS DESIGNED TO MINIMIZE THE DISCHARGE OF POLLUTANTS FROM THESE AREAS. MINIMIZATION OF EXPOSURE TO PRECIPITATION AND TO STORMWATER WILL NOT RESULT IN A DISCHARGE OF POLLUTANTS, OR WHERE EXPOSURE OF A SPECIFIC MATERIAL OR PRODUCT POSES LITTLE RISK TO STORMWATER CONTAMINATION (SUCH AS FINAL PRODUCTS AND MATERIALS INTENDED FOR OUTDOOR USE).

(26) (27) 2. WASTE DISPOSAL. LOCATE WASTE COLLECTION AREAS AWAY FROM STREETS, GUTTERS, WATERCOURSES AND STORM DRAINS. WASTE COLLECTION AREAS, SUCH AS DUMPSTERS, ARE OFTEN BEST LOCATED NEAR CONSTRUCTION SITE ENTRANCES TO MINIMIZE TRAFFIC ON DISTURBED SOILS. THE CONTRACTOR SHOULD INCLUDE SECONDARY CONTAINMENT AROUND LIQUID WASTE COLLECTION AREAS TO FURTHER MINIMIZE THE LIKELIHOOD OF CONTAMINATED DISCHARGES. SOLID MATERIALS, INCLUDING BUILDING MATERIALS, SHALL NOT BE DISCHARGED TO WATERS OF THE STATE, EXCEPT AS AUTHORIZED BY A SECTION 404 PERMIT.

3. ALL PERMITEES ARE REQUIRED TO MINIMIZE THE DISCHARGE OF POLLUTANTS FROM DEWATERING TRENCHES AND EXCAVATIONS. DISCHARGES ARE PROHIBITS UNLESS MANAGED BY APPROPRIATE CONTROLS.

(25) 4. IF ANY PETROLEUM PRODUCTS ARE KEPT ON SITE, THEN THEY SHALL BE KEPT IN A SECURE AREA AND MONITORED DAILY FOR ANY SPILLS OR LEAKS AND NOTED IN THE SAME DAY IN THE DAILY REPORT.

(25) 5. IF ANY PETROLEUM OR HARMFUL PRODUCTS ENTERS STATE WATERS OR ANY TRANSPORTATION TO STATE WATERS OF ANY DISCERNIBLE AMOUNT, THE SPILL SHALL BE REPORTED TO THE DEPARTMENT OF NATURAL RESOURCES EMERGENCY OPERATION CENTER AT 1-800-424-8802.

(25) 6. IF ANY PETROLEUM OR HARMFUL PRODUCTS ARE STORED ON SITE THEN THEY SHALL BE PLACED AS FAR FROM WETLANDS, DRAINAGE DITCHES, STORMWATER SYSTEMS, AND OTHER ENVIRONMENTALLY SENSITIVE AREAS AS POSSIBLE TO PROVIDE AS MUCH PROTECTION AS POSSIBLE. THESE AREAS SHOULD BE SURROUNDED BY BERMS OR OTHER PROTECTIVE MEASURES TO ENSURE THE CAPTURE OF ANY MATERIAL SHOULD LEAKS OR SPILLS OCCUR.

7. STABILIZATION OF THE SITE DURING CONSTRUCTION WITH PERMANENT VEGETATION SUCH AS (Ds3 AND Ds4) WILL BE INSTALLED IN ACCORDANCE WITH THE GRASSING SCHEDULE TO OPTIMIZE GROWTH TO STABILIZE THE SITE ONCE CONSTRUCTION IS COMPLETE AND WILL CONTROL ANY POSSIBLE POLLUTANTS FROM THE SITE.

(9) 8. THE EXISTING CONDITIONS OF THE SITE CONTAINS SITE AMENITY IMPROVEMENTS. THE PROPOSED USE OF THE SITES ARE PASSIVE PARKS, WITH ASSOCIATED PAVING, SANITARY, STORM, AND OTHER UTILITY INFRASTRUCTURE.

(14) 9. THE DESIGN PROFESSIONAL WHO PREPARED THE ES&PC PLAN IS TO INSPECT THE INSTALLATION OF THE INITIAL SEDIMENT STORAGE REQUIREMENTS AND PERIMETER CONTROL BMPS WITHIN 7 DAYS AFTER INSTALLATION.

(15) 10. NON-EXEMPT ACTIVITIES SHALL NOT BE CONDUCTED WITHIN THE 25 OR 50-FOOT UNDISTURBED STREAM BUFFERS AS MEASURED FROM THE POINT OF WRESTED VEGETATION OR WITHIN 25-FEET OF THE COASTAL MARSHLAND BUFFER AS MEASURED FROM THE JURISDICTIONAL DETERMINATION LINE WITHOUT FIRST ACQUIRING THE NECESSARY VARIANCES AND PERMITS.

(17) 11. AMENDMENTS/REVISIONS TO THE ES&PC PLAN WHICH HAVE A SIGNIFICANT EFFECT ON BMPS WITH A HYDRAULIC COMPONENT MUST BE CERTIFIED BY THE DESIGN PROFESSIONAL.

(18) 12. WASTE MATERIALS SHALL NOT BE DISCHARGED TO WATERS OF THE STATE, EXCEPT AS AUTHORIZED BY A SECTION 404 PERMIT.

(19) 13. THE ESCAPE OF SEDIMENT FROM THE SITE SHALL BE PREVENTED BY THE INSTALLATION OF EROSION AND SEDIMENT CONTROL MEASURES AND PRACTICES PRIOR TO LAND DISTURBING ACTIVITIES.

(20) 14. EROSION CONTROL MEASURES WILL BE MAINTAINED AT ALL TIMES. IF FULL IMPLEMENTATION OF THE APPROVED PLAN DOES NOT PROVIDE FOR EFFECTIVE EROSION CONTROL, ADDITIONAL EROSION AND SEDIMENT CONTROL MEASURES SHALL BE IMPLEMENTED TO CONTROL OR TREAT THE SEDIMENT SOURCE.

(21) 15. ANY DISTURBED AREA LEFT EXPOSED FOR A PERIOD GREATER THAN 14 DAYS SHALL BE STABILIZED WITH MULCH OR TEMPORARY SEEDING.

(28) MITIGATION OF SITE POLLUTANTS

NAME OF POLLUTANT	MITIGATION METHOD/BMP
SEDIMENT	CONSTRUCTION EXIT
	SILT FENCE
	INLET PROTECTION
	MULCH/GRASSING
PETROLEUM PRODUCTS	SEE ES&PC NOTES ON THIS SHEET
BUILDING MATERIALS	SEE ES&PC NOTES ON THIS SHEET
CONCRETE	SEE INTERMEDIATE EROSION AND SEDIMENTATION CONTROL NOTES

ANTICIPATED START DATE: 01/01/2025
ANTICIPATED END DATE: 07/01/2025

(29) ESPC PHASING SCHEDULE

DURATION	MONTH 1	MONTH 2	MONTH 3	MONTH 4	MONTH 5	MONTH 6
INSTALLATION & MAINTENANCE OF INITIAL BMPS	■	■	■	■	■	■
CLEARING & GRUBBING	■					
INSTALLATION & MAINTENANCE OF INTERMEDIATE BMPS		■	■	■	■	■
GRADING, STORMWATER, & UTILITY INSTALLATION		■	■	■	■	
BUILDING CONSTRUCTION		■	■	■	■	
FINAL GRADING, PAVING, & FINAL BMP INSTALLATION						■
REMOVAL OF ALL TEMPORARY BMPS						■

(34) WATERS SUPPORTING WARM WATER FISHERIES

SITE SIZE, ACRES	SURFACE WATER DRAINAGE AREA, SQUARE MILES								
	0 - 4.99	5 - 9.99	10 - 24.99	25 -49.99	50 - 99.99	100 - 249.99	250 - 499.99	500 +
1.00 - 10	75	150	200	400	750	750	750	750
10.01 - 25	50	100	100	200	300	500	750	750
25.01 - 50	50	50	100	100	200	300	750	750
50.01 - 100	50	50	50	100	100	150	300	600
100.01 +	50	50	50	50	50	100	200	100
SEE APPENDIX B								

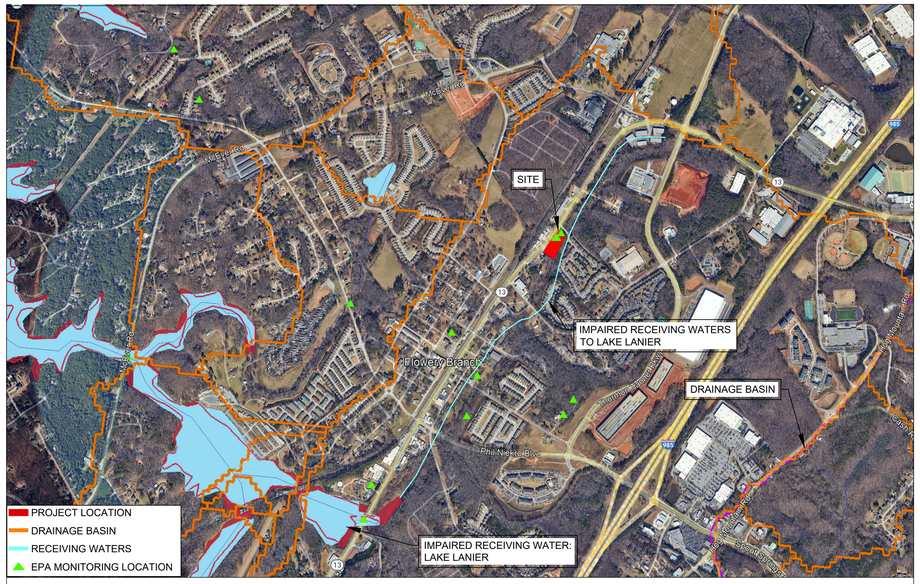

(11) RECEIVING WATERS AND IMPAIRED STREAM MAP

ESG ENGINEERING
6400 Peake Rd
Macon, GA 31210
Ph: (478) 474-4996
Fax: (478) 474-5045

GROUNDWATER WELLS #4 & #5

FOR THE
CITY OF FLOWERY BRANCH

REVISIONS

NO.	DESCRIPTION	DATE
1	ESPC SHEETS	11-7-25
2	BID SET OF PLANS	12-1-25
3	REVISED WITH CITY COMMENTS	12-5-25

BID SET

GEORGIA REGISTERED No. PE046341 PROFESSIONAL ENGINEER ANDREW D SWICEGOOD

DRAWN BY: DSC
CHECKED BY: ADS
DATE: OCT 2025
SCALE: N.T.S.

CONTENT:

EROSION, SEDIMENTATION, AND POLLUTION CONTROL PLAN DETAILS

SHEET NO: 3
C7.1

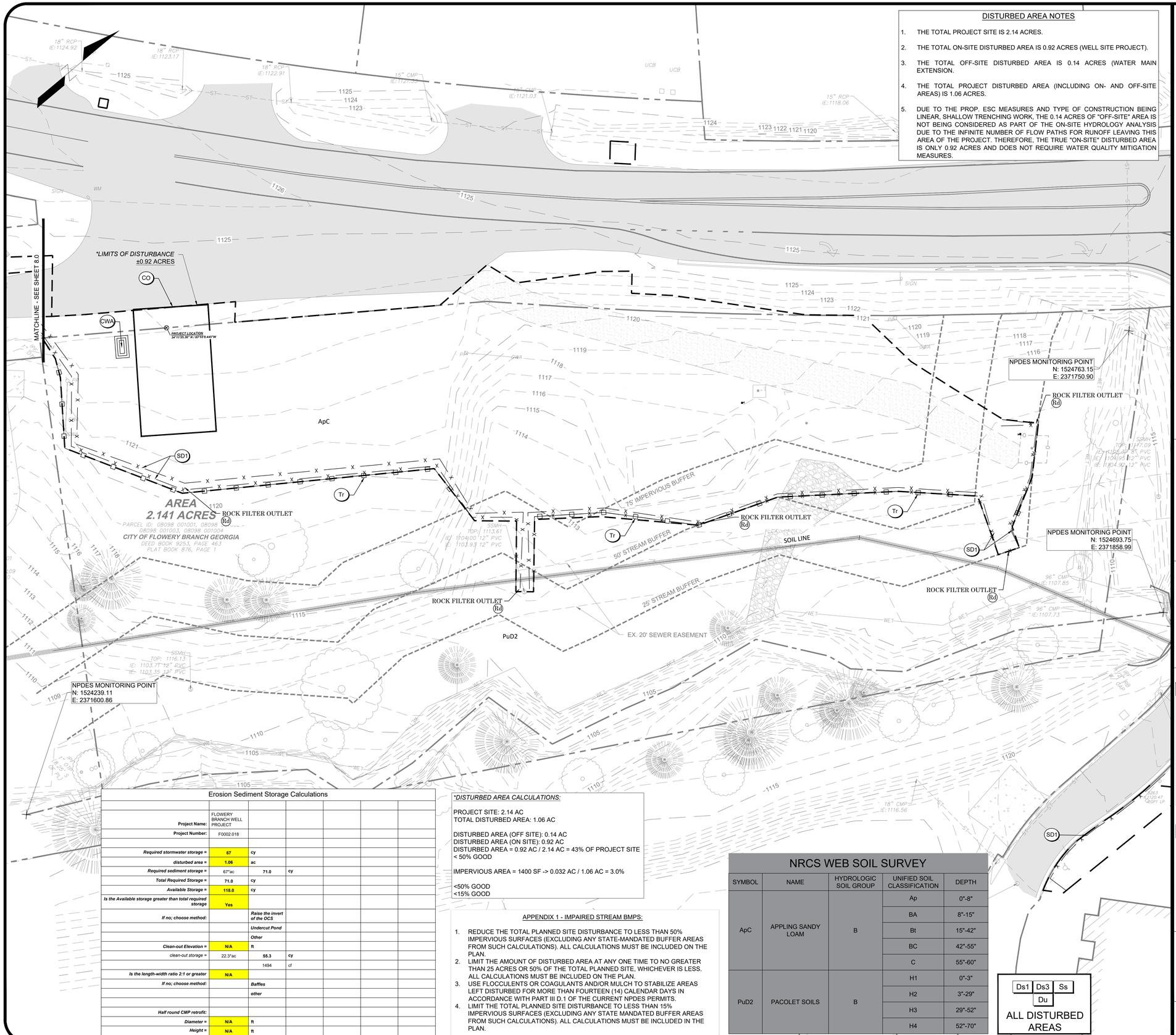

DISTURBED AREA NOTES

1. THE TOTAL PROJECT SITE IS 2.14 ACRES.
2. THE TOTAL ON-SITE DISTURBED AREA IS 0.92 ACRES (WELL SITE PROJECT).
3. THE TOTAL OFF-SITE DISTURBED AREA IS 0.14 ACRES (WATER MAIN EXTENSION.
4. THE TOTAL PROJECT DISTURBED AREA (INCLUDING ON- AND OFF-SITE AREAS) IS 1.06 ACRES.
5. DUE TO THE PROP. ESC MEASURES AND TYPE OF CONSTRUCTION BEING LINEAR, SHALLOW TRENCHING WORK, THE 0.14 ACRES OF "OFF-SITE" AREA IS NOT BEING CONSIDERED AS PART OF THE ON-SITE HYDROLOGY ANALYSIS DUE TO THE INFINITE NUMBER OF FLOW PATHS FOR RUNOFF LEAVING THIS AREA OF THE PROJECT. THEREFORE, THE TRUE "ON-SITE" DISTURBED AREA IS ONLY 0.92 ACRES AND DOES NOT REQUIRE WATER QUALITY MITIGATION MEASURES.

SITE INFORMATION

PROJECT ADDRESS	4745 ATLANTA HWY
PARCEL NUMBER	08098 001001 THRU 08098 001004
PARCEL ZONING	H-B
PROJECT AREA	2.14 ACRES
BUILDING SETBACK	
FRONT	NONE
REAR	30'
SIDE	10'
LANDSCAPE SETBACK	
FRONT	10'
REAR	30'
SIDE	NONE

EROSION, SEDIMENTATION, & POLLUTION CONTROL STATEMENTS:

1. THE DESIGN PROFESSIONAL WHO PREPARED THE ES&PC PLAN IS TO INSPECT AND CERTIFY THE INSTALLATION OF THE INITIAL SEDIMENT STORAGE REQUIREMENTS AND PERIMETER CONTROL BMPS WITHIN 7 DAYS AFTER INSTALLATION.
2. NON-EXEMPT ACTIVITIES SHALL NOT BE CONDUCTED WITHIN THE 25 OR 50-FOOT UNDISTURBED STREAM BUFFERS AS MEASURED FROM THE POINT OF WRESTED VEGETATION OR WITHIN 25-FEET OF THE COASTAL MARSHLAND BUFFER AS MEASURED FROM THE JURISDICTIONAL DETERMINATION LINE WITHOUT FIRST ACQUIRING THE NECESSARY VARIANCES AND PERMITS.
3. AMENDMENTS/REVISIONS TO THE ES&PC PLAN WHICH HAVE A SIGNIFICANT EFFECT ON BMPS WITH A HYDRAULIC COMPONENT MUST BE CERTIFIED BY THE DESIGN PROFESSIONAL.
4. WASTE MATERIALS SHALL NOT BE DISCHARGED TO WATERS OF THE STATE, EXCEPT AS AUTHORIZED BY A SECTION 404 PERMIT.
5. THE ESCAPE OF SEDIMENT FROM THE SITE SHALL BE PREVENTED BY THE INSTALLATION OF EROSION AND SEDIMENT CONTROL MEASURES AND PRACTICES PRIOR TO LAND DISTURBING ACTIVITIES.
6. EROSION CONTROL MEASURES WILL BE MAINTAINED AT ALL TIMES. IF FULL IMPLEMENTATION OF THE APPROVED PLAN DOES NOT PROVIDE FOR EFFECTIVE EROSION CONTROL, ADDITIONAL EROSION AND SEDIMENT CONTROL MEASURES SHALL BE IMPLEMENTED TO CONTROL OR TREAT THE SEDIMENT SOURCE.
7. ANY DISTURBED AREA LEFT EXPOSED FOR A PERIOD GREATER THAN 14 DAYS SHALL BE STABILIZED WITH MULCH OR TEMPORARY SEEDING.

INITIAL EROSION & SEDIMENTATION CONTROL NOTES:

1. THE CONTRACTOR SHALL INSTALL ALL PERIMETER CONTROL BMPS AND CONSTRUCTION EXIT PRIOR TO ANY LAND DISTURBING ACTIVITIES.
2. THE CONTRACTOR SHALL PROVIDE DUST CONTROL FOR THE PROJECT AREA AS NEEDED BASED ON PROJECT CONDITIONS.
3. THE CONTRACTOR SHALL PERFORM DAILY INSPECTIONS / MAINTENANCE OF ALL EROSION CONTROL BMPS. SEDIMENT LADEN RUNOFF SHALL BE CONTAINED AND TREATED ON SITE.
4. THE TOTAL ON-SITE DISTURBED AREA FOR THE INITIAL PHASE IS 0.92 ACRES.
5. THE TOTAL PROJECT DISTURBED AREA (INCLUDING OFF-SITE AREAS) IS 1.06 ACRES.

SEDIMENT STORAGE CALCULATIONS:

REQUIRED SEDIMENT STORAGE:
67 CUBIC YARD PER ACRE DRAINED = 67 CY/AC * 1.06 AC = 71.0 CY

PROVIDED SILT FENCE: 670 LF TYPE S SILT FENCE & 1,030 LF TYPE NS
PROVIDED SEDIMENT STORAGE (SD1): 3.75 SF*670 LF + 1.88 SF*1,030 LF = 118.0 CY
PROVIDED SEDIMENT STORAGE (SD4): 354 CY STORAGE AVAILABLE

THE TOTAL REQUIRED SEDIMENT STORAGE FOR THE INTERMEDIATE PHASE IS 71.0 CY. THE SEDIMENT STORAGE WILL BE PROVIDED BY THE SILT FENCE (SD1) AND ROCK FILTER OUTLETS.

STRUCTURAL PRACTICES

CODE	PRACTICE	DETAIL	MAP SYMBOL	DESCRIPTION
Co	CONSTRUCTION EXIT		Co (LABEL)	A crushed stone pad located at the construction site exit to provide a place for removing mud from tires thereby protecting public streets.
CWA	CONCRETE WASHOUT AREA		CWA	A washdown area for tools, concrete mixer chutes, hoppers and rear of vehicles.
Sd1	SEDIMENT BARRIER		Sd1 (INDICATE TYPE)	A barrier to prevent sediment from leaving the construction site. It may be sandbags, bales of straw or hay, brush, logs and poles, gravel, or a silt fence.
Rd	ROCK FILTER DAM			A temporary stone filter dam installed across drainageways or in conjunction with a temporary sediment trap.
Tr	TREE PROTECTION			The protection of desirable trees from injury during construction.

VEGETATIVE PRACTICES

CODE	PRACTICE	DETAIL	MAP SYMBOL	DESCRIPTION
Ds1	DISTURBED AREA STABILIZATION (WITH MULCHING ONLY)		Ds1	Establishing temporary protection for disturbed areas where seedlings may not have a suitable growing season to produce an erosion retarding cover.
Ds3	DISTURBED AREA STABILIZATION (WITH PERM SEEDING)		Ds3	Establishing a permanent vegetative cover such as trees, shrubs, vines, grasses, or legumes on disturbed areas.
Du	DUST CONTROL ON DISTURBED AREAS		Du	Controlling surface and air movement of dust on construction site, roadways and similar sites.
Ss	SLOPE STABILIZATION		Ss	A protective covering used to prevent erosion and establish temporary or permanent vegetation on steep slopes, shore lines, or channels.

Erosion Sediment Storage Calculations

Project Name:	FLOWERY BRANCH WELL PROJECT					
Project Number:	F0002.018					
Required stormwater storage =	**67**	**cy**				
disturbed area =	**1.06**	**ac**				
Required sediment storage =	67*ac	**71.0**	**cy**			
Total Required Storage =	**71.0**	**cy**				
Available Storage =	**118.0**	**cy**				
Is the Available storage greater than total required storage	**Yes**					
If no; choose method:		***Raise the invert of the OCS***				
		Undercut Pond				
		Other				
Clean-out Elevation =	**N/A**	**ft**				
clean-out storage =	22.3*ac	**55.3**	**cy**			
		1494	cf			
Is the length-width ratio 2:1 or greater	**N/A**					
If no; choose method:		***Baffles***				
		other				
Half round CMP retrofit:						
Diameter =	**N/A**	**ft**				
Height =	**N/A**	**ft**				

**DISTURBED AREA CALCULATIONS:*

PROJECT SITE: 2.14 AC
TOTAL DISTURBED AREA: 1.06 AC

DISTURBED AREA (OFF SITE): 0.14 AC
DISTURBED AREA (ON SITE): 0.92 AC
DISTURBED AREA = 0.92 AC / 2.14 AC = 43% OF PROJECT SITE
< 50% GOOD

IMPERVIOUS AREA = 1400 SF -> 0.032 AC / 1.06 AC = 3.0%

<50% GOOD
<15% GOOD

APPENDIX 1 - IMPAIRED STREAM BMPS:

1. REDUCE THE TOTAL PLANNED SITE DISTURBANCE TO LESS THAN 50% IMPERVIOUS SURFACES (EXCLUDING ANY STATE-MANDATED BUFFER AREAS FROM SUCH CALCULATIONS). ALL CALCULATIONS MUST BE INCLUDED ON THE PLAN.
2. LIMIT THE AMOUNT OF DISTURBED AREA AT ANY ONE TIME TO NO GREATER THAN 25 ACRES OR 50% OF THE TOTAL PLANNED SITE, WHICHEVER IS LESS. ALL CALCULATIONS MUST BE INCLUDED ON THE PLAN.
3. USE FLOCCULENTS OR COAGULANTS AND/OR MULCH TO STABILIZE AREAS LEFT DISTURBED FOR MORE THAN FOURTEEN (14) CALENDAR DAYS IN ACCORDANCE WITH PART III D.1 OF THE CURRENT NPDES PERMITS.
4. LIMIT THE TOTAL PLANNED SITE DISTURBANCE TO LESS THAN 15% IMPERVIOUS SURFACES (EXCLUDING ANY STATE MANDATED BUFFER AREAS FROM SUCH CALCULATIONS). ALL CALCULATIONS MUST BE INCLUDED IN THE PLAN.

NRCS WEB SOIL SURVEY

SYMBOL	NAME	HYDROLOGIC SOIL GROUP	UNIFIED SOIL CLASSIFICATION	DEPTH
ApC	APPLING SANDY LOAM	B	Ap	0"-8"
			BA	8"-15"
			Bt	15"-42"
			BC	42"-55"
			C	55"-60"
PuD2	PACOLET SOILS	B	H1	0"-3"
			H2	3"-29"
			H3	29"-52"
			H4	52"-70"

Ds1 | Ds3 | Ss | Du
ALL DISTURBED AREAS

20' 10' 0' 20'
GRAPHIC SCALE 1" = 20'

GSWCC GEORGIA SOIL AND WATER CONSERVATION COMMISSION
Delmas S Crisp III
LEVEL II CERTIFIED DESIGN PROFESSIONAL
CERTIFICATION NUMBER: 0000100336
ISSUED: 11/08/2025 EXPIRES: 11/08/2028

GEORGIA811 www.Georgia811.com

ESG ENGINEERING
6400 Peake Rd
Macon, GA 31210
Ph: (478) 474-4996
Fax: (478) 474-5045

GROUNDWATER WELLS #4 & #5

FOR THE
CITY OF FLOWERY BRANCH

NO.	DESCRIPTION	DATE
1	ESPC SHEETS	11-7-25
2	BID SET OF PLANS	12-1-25
3	REVISED WITH CITY COMMENTS	12-5-25

BID SET

GEORGIA REGISTERED No. PE046341 PROFESSIONAL ENGINEER ANDREW D SWICEGOOD

DRAWN BY: DSC
CHECKED BY: ADS
DATE: OCT 2025
SCALE: SEE SCALE

CONTENT:

CIVIL:
INITIAL EROSION, SEDIMENTATION, & POLLUTION CONTROL PLAN

SHEET NO: 2 / 3
C8.0

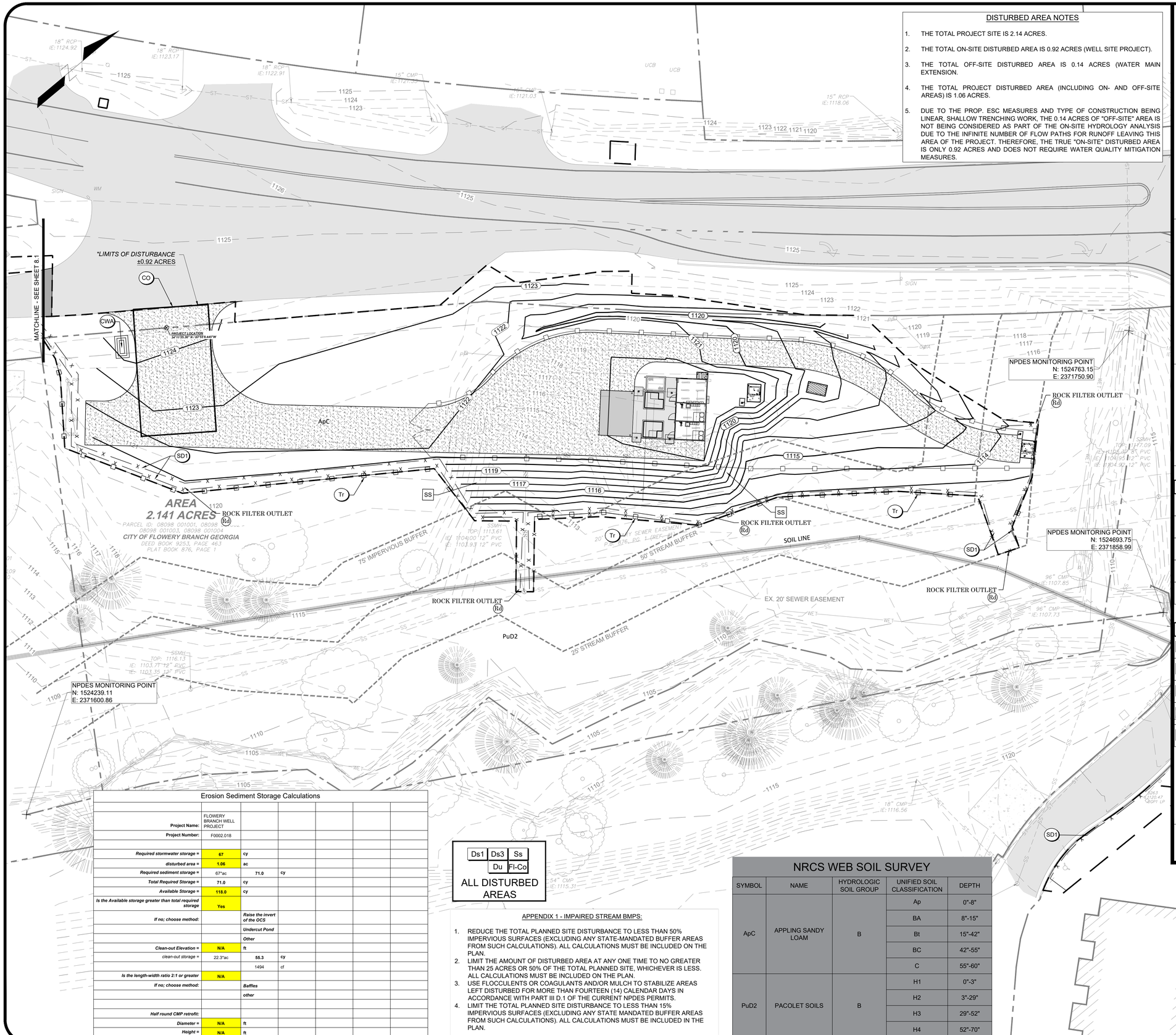

DISTURBED AREA NOTES

1. THE TOTAL PROJECT SITE IS 2.14 ACRES.
2. THE TOTAL ON-SITE DISTURBED AREA IS 0.92 ACRES (WELL SITE PROJECT).
3. THE TOTAL OFF-SITE DISTURBED AREA IS 0.14 ACRES (WATER MAIN EXTENSION.
4. THE TOTAL PROJECT DISTURBED AREA (INCLUDING ON- AND OFF-SITE AREAS) IS 1.06 ACRES.
5. DUE TO THE PROP. ESC MEASURES AND TYPE OF CONSTRUCTION BEING LINEAR, SHALLOW TRENCHING WORK, THE 0.14 ACRES OF "OFF-SITE" AREA IS NOT BEING CONSIDERED AS PART OF THE ON-SITE HYDROLOGY ANALYSIS DUE TO THE INFINITE NUMBER OF FLOW PATHS FOR RUNOFF LEAVING THIS AREA OF THE PROJECT. THEREFORE, THE TRUE "ON-SITE" DISTURBED AREA IS ONLY 0.92 ACRES AND DOES NOT REQUIRE WATER QUALITY MITIGATION MEASURES.

EROSION, SEDIMENTATION, & POLLUTION CONTROL STATEMENTS:

1. THE DESIGN PROFESSIONAL WHO PREPARED THE ES&PC PLAN IS TO INSPECT AND CERTIFY THE INSTALLATION OF THE INITIAL SEDIMENT STORAGE REQUIREMENTS AND PERIMETER CONTROL BMPS WITHIN 7 DAYS AFTER INSTALLATION.
2. NON-EXEMPT ACTIVITIES SHALL NOT BE CONDUCTED WITHIN THE 25 OR 50-FOOT UNDISTURBED STREAM BUFFERS AS MEASURED FROM THE POINT OF WRESTED VEGETATION OR WITHIN 25-FEET OF THE COASTAL MARSHLAND BUFFER AS MEASURED FROM THE JURISDICTIONAL DETERMINATION LINE WITHOUT FIRST ACQUIRING THE NECESSARY VARIANCES AND PERMITS.
3. AMENDMENTS/REVISIONS TO THE ES&PC PLAN WHICH HAVE A SIGNIFICANT EFFECT ON BMPS WITH A HYDRAULIC COMPONENT MUST BE CERTIFIED BY THE DESIGN PROFESSIONAL.
4. WASTE MATERIALS SHALL NOT BE DISCHARGED TO WATERS OF THE STATE, EXCEPT AS AUTHORIZED BY A SECTION 404 PERMIT.
5. THE ESCAPE OF SEDIMENT FROM THE SITE SHALL BE PREVENTED BY THE INSTALLATION OF EROSION AND SEDIMENT CONTROL MEASURES AND PRACTICES PRIOR TO LAND DISTURBING ACTIVITIES.
6. EROSION CONTROL MEASURES WILL BE MAINTAINED AT ALL TIMES. IF FULL IMPLEMENTATION OF THE APPROVED PLAN DOES NOT PROVIDE FOR EFFECTIVE EROSION CONTROL, ADDITIONAL EROSION AND SEDIMENT CONTROL MEASURES SHALL BE IMPLEMENTED TO CONTROL OR TREAT THE SEDIMENT SOURCE.
7. ANY DISTURBED AREA LEFT EXPOSED FOR A PERIOD GREATER THAN 14 DAYS SHALL BE STABILIZED WITH MULCH OR TEMPORARY SEEDING.

INTERMEDIATE EROSION & SEDIMENTATION CONTROL NOTES:

1. CONTRACTOR SHALL INSTALL CONCRETE WASH AREA. CONCRETE WASH AREA SHALL BE USED FOR WASHDOWN OF TOOLS, CONCRETE MIXER CHUTES, HOPPERS AND REAR OF THE VEHICLES ONLY. WASHOUT OF THE DRUM AT THE CONSTRUCTION SITE IS PROHIBITED.
2. THE CONTRACTOR SHALL PROVIDE DUST CONTROL FOR THE PROJECT AREA AS NEEDED BASED ON PROJECT CONDITIONS.
3. THE CONTRACTOR SHALL PERFORM DAILY INSPECTIONS / MAINTENANCE OF ALL EROSION CONTROL BMPS. SEDIMENT LADEN RUNOFF SHALL BE CONTAINED AND TREATED ON SITE.
4. THE TOTAL ON-SITE DISTURBED AREA FOR THE INITIAL PHASE IS 0.92 ACRES.
5. THE TOTAL PROJECT DISTURBED AREA (INCLUDING OFF-SITE AREAS) IS 1.06 ACRES.
6. THE PRIMARY PERMITTEE WILL RETAIN ESG (THE DESIGN PROFESSIONAL) DURNIG ALL PHASES OF ESPC.
7. PROVIDED SILT FENCE: ±1,030 LF SILT FENCE TYPE NS & ±670 LF SILT FENCE TYPE S.

SEDIMENT STORAGE CALCULATIONS:

REQUIRED SEDIMENT STORAGE:
67 CUBIC YARD PER ACRE DRAINED = 67 CY/AC * 1.06 AC = 71.0 CY

PROVIDED SILT FENCE: 670 LF TYPE S SILT FENCE & 1,030 LF TYPE NS
PROVIDED SEDIMENT STORAGE (SD1): 3.75 SF*670 LF + 1.88 SF*1,030 LF = 118.0 CY
PROVIDED SEDIMENT STORAGE (SD4): 354 CY STORAGE AVAILABLE

THE TOTAL REQUIRED SEDIMENT STORAGE FOR THE INTERMEDIATE PHASE IS 71.0 CY. THE SEDIMENT STORAGE WILL BE PROVIDED BY THE SILT FENCE (SD1) AND ROCK FILTER OUTLETS.

STRUCTURAL PRACTICES

CODE	PRACTICE	DETAIL	MAP SYMBOL	DESCRIPTION
Co	CONSTRUCTION EXIT		Co	A crushed stone pad located at the construction site exit to provide a place for removing mud from tires thereby protecting public streets.
CWA	CONCRETE WASHOUT AREA		CWA	A washdown area for tools, concrete mixer chutes, hoppers and rear of vehicles.
Sd1	SEDIMENT BARRIER			A barrier to prevent sediment from leaving the construction site. It may be sandbags, bales of straw or hay, brush, logs and poles, gravel, or a silt fence.
Rd	ROCK FILTER DAM			A temporary stone filter dam installed across drainageways or in conjunction with a temporary sediment trap
Tr	TREE PROTECTION			The protection of desirable trees from injury during construction.

VEGETATIVE PRACTICES

CODE	PRACTICE	DETAIL	MAP SYMBOL	DESCRIPTION
Ds1	DISTURBED AREA STABILIZATION (WITH MULCHING ONLY)		Ds1	Establishing temporary protection for disturbed areas where seedlings may not have a suitable growing season to produce an erosion retarding cover.
Ds3	DISTURBED AREA STABILIZATION (WITH PERM SEEDING)		Ds3	Establishing a permanent vegetative cover such as trees, shrubs, vines, grasses, or legumes on disturbed areas.
Du	DUST CONTROL ON DISTURBED AREAS		Du	Controlling surface and air movement of dust on construction site, roadways and similar sites.
Fl-Co	FLOCCULANTS AND COAGULANTS		Fl-Co	Substance formulated to assist in the solids/liquid separation of suspended particles in solution.
Ss	SLOPE STABILIZATION		Ss	A protective covering used to prevent erosion and establish temporary or permanent vegetation on steep slopes, shore lines, or channels.

GSWCC GEORGIA SOIL AND WATER CONSERVATION COMMISSION
Delmas S Crisp III
LEVEL II CERTIFIED DESIGN PROFESSIONAL
CERTIFICATION NUMBER: 0000100336
ISSUED: 11/08/2025 EXPIRES: 11/08/2028

GEORGIA811 www.Georgia811.com

Erosion Sediment Storage Calculations

Project Name:	FLOWERY BRANCH WELL PROJECT						
Project Number:	F0002.018						
Required stormwater storage =	**67**	**cy**					
disturbed area =	**1.06**	**ac**					
Required sediment storage =	67*ac		**71.0**	**cy**			
Total Required Storage =	**71.0**	**cy**					
Available Storage =	**118.0**	**cy**					
Is the Available storage greater than total required storage	**Yes**						
If no; choose method:		***Raise the invert of the OCS***					
		Undercut Pond					
		Other					
Clean-out Elevation =	**N/A**	**ft**					
clean-out storage =	22.3*ac		**55.3**	**cy**			
			1494	cf			
Is the length-width ratio 2:1 or greater	**N/A**						
If no; choose method:		***Baffles***					
		other					
Half round CMP retrofit:							
Diameter =	**N/A**	**ft**					
Height =	**N/A**	**ft**					

Ds1	Ds3	Ss
	Du	Fl-Co

ALL DISTURBED AREAS

APPENDIX 1 - IMPAIRED STREAM BMPS:

1. REDUCE THE TOTAL PLANNED SITE DISTURBANCE TO LESS THAN 50% IMPERVIOUS SURFACES (EXCLUDING ANY STATE-MANDATED BUFFER AREAS FROM SUCH CALCULATIONS). ALL CALCULATIONS MUST BE INCLUDED ON THE PLAN.
2. LIMIT THE AMOUNT OF DISTURBED AREA AT ANY ONE TIME TO NO GREATER THAN 25 ACRES OR 50% OF THE TOTAL PLANNED SITE, WHICHEVER IS LESS. ALL CALCULATIONS MUST BE INCLUDED ON THE PLAN.
3. USE FLOCCULENTS OR COAGULANTS AND/OR MULCH TO STABILIZE AREAS LEFT DISTURBED FOR MORE THAN FOURTEEN (14) CALENDAR DAYS IN ACCORDANCE WITH PART III D.1 OF THE CURRENT NPDES PERMITS.
4. LIMIT THE TOTAL PLANNED SITE DISTURBANCE TO LESS THAN 15% IMPERVIOUS SURFACES (EXCLUDING ANY STATE MANDATED BUFFER AREAS FROM SUCH CALCULATIONS). ALL CALCULATIONS MUST BE INCLUDED IN THE PLAN.

NRCS WEB SOIL SURVEY

SYMBOL	NAME	HYDROLOGIC SOIL GROUP	UNIFIED SOIL CLASSIFICATION	DEPTH
ApC	APPLING SANDY LOAM	B	Ap	0"-8"
			BA	8"-15"
			Bt	15"-42"
			BC	42"-55"
			C	55"-60"
PuD2	PACOLET SOILS	B	H1	0"-3"
			H2	3"-29"
			H3	29"-52"
			H4	52"-70"

DISTURBED AREA CALCULATIONS:

PROJECT SITE: 2.14 AC
TOTAL DISTURBED AREA: 1.06 AC

DISTURBED AREA (OFF SITE): 0.14 AC
DISTURBED AREA (ON SITE): 0.92 AC
DISTURBED AREA = 0.92 AC / 2.14 AC = 43% OF PROJECT SITE
< 50% GOOD

IMPERVIOUS AREA = 1400 SF -> 0.032 AC / 1.06 AC = 3.0%

<50% GOOD
<15% GOOD

ESG ENGINEERING
6400 Peake Rd
Macon, GA 31210
Ph: (478) 474-4996
Fax: (478) 474-5045

GROUNDWATER WELLS #4 & #5

FOR THE
CITY OF FLOWERY BRANCH

REVISIONS NO.	DESCRIPTION	DATE
1	ESPC SHEETS	11-7-25
2	BID SET OF PLANS	12-1-25
3	REVISED WITH CITY COMMENTS	12-5-25

BID SET

GEORGIA REGISTERED No. PE046341 PROFESSIONAL ENGINEER ANDREW D SWICEGOOD

DRAWN BY: DSC
CHECKED BY: ADS
DATE: OCT 2025
SCALE: SEE SCALE

CONTENT:

CIVIL:
INTERMEDIATE EROSION, SEDIMENTATION, & POLLUTION CONTROL PLAN

SHEET NO: 2 / 3

C8.1

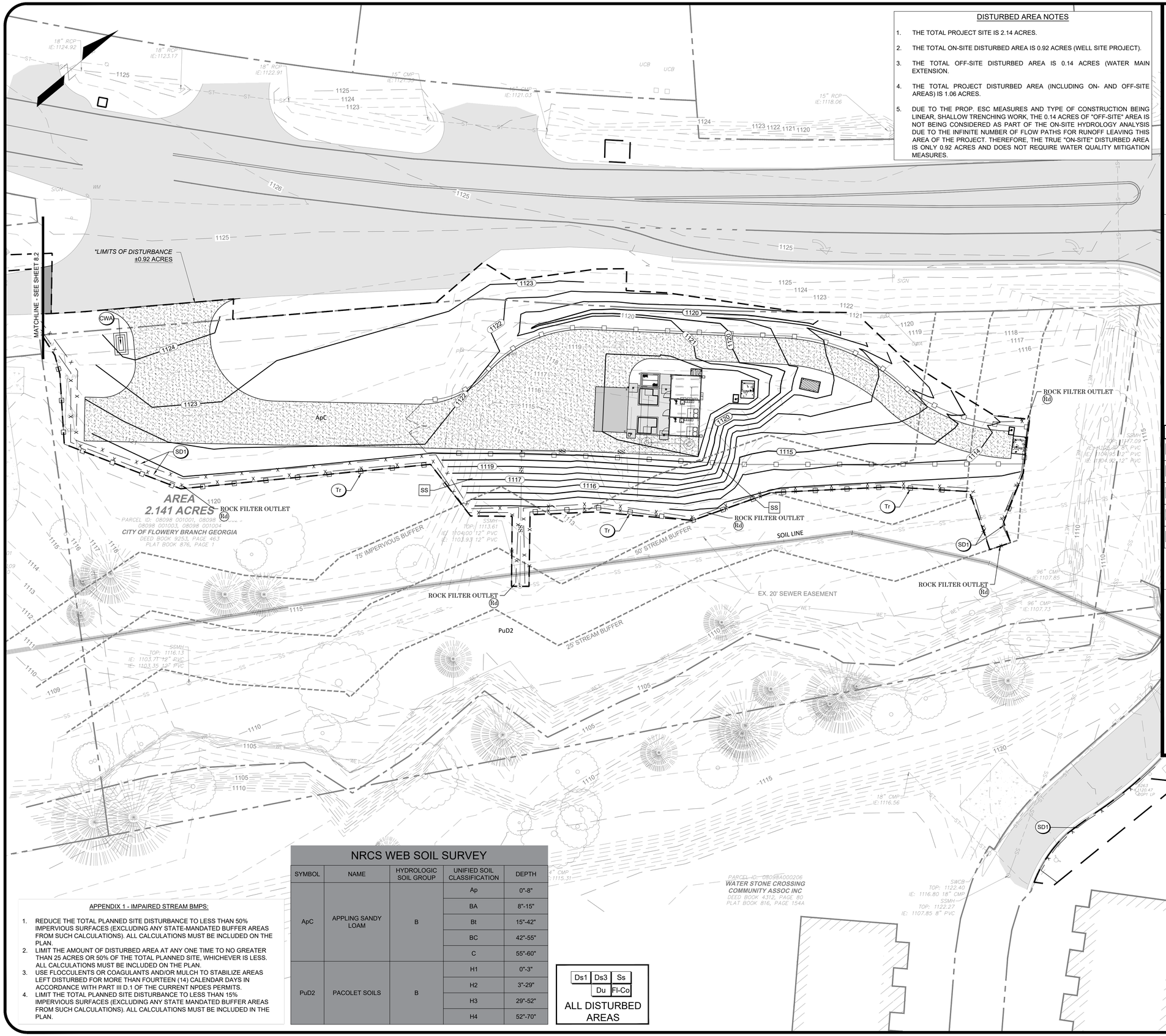

DISTURBED AREA NOTES

1. THE TOTAL PROJECT SITE IS 2.14 ACRES.
2. THE TOTAL ON-SITE DISTURBED AREA IS 0.92 ACRES (WELL SITE PROJECT).
3. THE TOTAL OFF-SITE DISTURBED AREA IS 0.14 ACRES (WATER MAIN EXTENSION.
4. THE TOTAL PROJECT DISTURBED AREA (INCLUDING ON- AND OFF-SITE AREAS) IS 1.06 ACRES.
5. DUE TO THE PROP. ESC MEASURES AND TYPE OF CONSTRUCTION BEING LINEAR, SHALLOW TRENCHING WORK, THE 0.14 ACRES OF "OFF-SITE" AREA IS NOT BEING CONSIDERED AS PART OF THE ON-SITE HYDROLOGY ANALYSIS DUE TO THE INFINITE NUMBER OF FLOW PATHS FOR RUNOFF LEAVING THIS AREA OF THE PROJECT. THEREFORE, THE TRUE "ON-SITE" DISTURBED AREA IS ONLY 0.92 ACRES AND DOES NOT REQUIRE WATER QUALITY MITIGATION MEASURES.

EROSION, SEDIMENTATION, & POLLUTION CONTROL STATEMENTS:

1. THE DESIGN PROFESSIONAL WHO PREPARED THE ES&PC PLAN IS TO INSPECT AND CERTIFY THE INSTALLATION OF THE INITIAL SEDIMENT STORAGE REQUIREMENTS AND PERIMETER CONTROL BMPS WITHIN 7 DAYS AFTER INSTALLATION.
2. NON-EXEMPT ACTIVITIES SHALL NOT BE CONDUCTED WITHIN THE 25 OR 50-FOOT UNDISTURBED STREAM BUFFERS AS MEASURED FROM THE POINT OF WRESTED VEGETATION OR WITHIN 25-FEET OF THE COASTAL MARSHLAND BUFFER AS MEASURED FROM THE JURISDICTIONAL DETERMINATION LINE WITHOUT FIRST ACQUIRING THE NECESSARY VARIANCES AND PERMITS.
3. AMENDMENTS/REVISIONS TO THE ES&PC PLAN WHICH HAVE A SIGNIFICANT EFFECT ON BMPS WITH A HYDRAULIC COMPONENT MUST BE CERTIFIED BY THE DESIGN PROFESSIONAL.
4. WASTE MATERIALS SHALL NOT BE DISCHARGED TO WATERS OF THE STATE, EXCEPT AS AUTHORIZED BY A SECTION 404 PERMIT.
5. THE ESCAPE OF SEDIMENT FROM THE SITE SHALL BE PREVENTED BY THE INSTALLATION OF EROSION AND SEDIMENT CONTROL MEASURES AND PRACTICES PRIOR TO LAND DISTURBING ACTIVITIES.
6. EROSION CONTROL MEASURES WILL BE MAINTAINED AT ALL TIMES. IF FULL IMPLEMENTATION OF THE APPROVED PLAN DOES NOT PROVIDE FOR EFFECTIVE EROSION CONTROL, ADDITIONAL EROSION AND SEDIMENT CONTROL MEASURES SHALL BE IMPLEMENTED TO CONTROL OR TREAT THE SEDIMENT SOURCE.
7. ANY DISTURBED AREA LEFT EXPOSED FOR A PERIOD GREATER THAN 14 DAYS SHALL BE STABILIZED WITH MULCH OR TEMPORARY SEEDING.

FINAL EROSION & SEDIMENTATION CONTROL NOTES:

1. CONTRACTOR SHALL INSTALL CONCRETE WASH AREA. CONCRETE WASH AREA SHALL BE USED FOR WASHDOWN OF TOOLS, CONCRETE MIXER CHUTES, HOPPERS AND REAR OF THE VEHICLES ONLY. WASHOUT OF THE DRUM AT THE CONSTRUCTION SITE IS PROHIBITED.
2. THE CONTRACTOR SHALL REMOVE ALL TEMPORARY BMPS ONCE FINAL STABILIZATION HAS BEEN MET.
3. THE CONTRACTOR SHALL PERFORM DAILY INSPECTIONS / MAINTENANCE OF ALL EROSION CONTROL BMPS. SEDIMENT LADEN RUNOFF SHALL BE CONTAINED AND TREATED ON SITE.
4. THE PRIMARY PERMITTEE WILL RETAIN THE DESIGN PROFESSIONAL DURING THE INTERMEDIATE GRADING AND DRAINAGE BMP PHASE, AS WELL AS, THE FINAL BMP PHASE.
5. DRUM WASHOUT IS PROHIBITED FROM CONSTRUCTION SITE.
4. THE TOTAL ON-SITE DISTURBED AREA FOR THE INITIAL PHASE IS 0.92 ACRES.
5. THE TOTAL PROJECT DISTURBED AREA (INCLUDING OFF-SITE AREAS) IS 1.06 ACRES.

VEGETATIVE PRACTICES

CODE	PRACTICE	DETAIL	MAP SYMBOL	DESCRIPTION
Ds1	DISTURBED AREA STABILIZATION (WITH MULCHING ONLY)		Ds1	Establishing temporary protection for disturbed areas where seedlings may not have a suitable growing season to produce an erosion retarding cover.
Ds3	DISTURBED AREA STABILIZATION (WITH PERM SEEDING)		Ds3	Establishing a permanent vegetative cover such as trees, shrubs, vines, grasses, or legumes on disturbed areas.
Du	DUST CONTROL ON DISTURBED AREAS		Du	Controlling surface and air movement of dust on construction site, roadways and similar sites.
Fl-Co	FLOCCULANTS AND COAGULANTS		Fl-Co	Substance formulated to assist in the solids/liquid separation of suspended particles in solution.
Ss	SLOPE STABILIZATION		Ss	A protective covering used to prevent erosion and establish temporary or permanent vegetation on steep slopes, shore lines, or channels.

NRCS WEB SOIL SURVEY

SYMBOL	NAME	HYDROLOGIC SOIL GROUP	UNIFIED SOIL CLASSIFICATION	DEPTH
ApC	APPLING SANDY LOAM	B	Ap	0"-8"
			BA	8"-15"
			Bt	15"-42"
			BC	42"-55"
			C	55"-60"
PuD2	PACOLET SOILS	B	H1	0"-3"
			H2	3"-29"
			H3	29"-52"
			H4	52"-70"

APPENDIX 1 - IMPAIRED STREAM BMPS:

1. REDUCE THE TOTAL PLANNED SITE DISTURBANCE TO LESS THAN 50% IMPERVIOUS SURFACES (EXCLUDING ANY STATE-MANDATED BUFFER AREAS FROM SUCH CALCULATIONS). ALL CALCULATIONS MUST BE INCLUDED ON THE PLAN.
2. LIMIT THE AMOUNT OF DISTURBED AREA AT ANY ONE TIME TO NO GREATER THAN 25 ACRES OR 50% OF THE TOTAL PLANNED SITE, WHICHEVER IS LESS. ALL CALCULATIONS MUST BE INCLUDED ON THE PLAN.
3. USE FLOCCULENTS OR COAGULANTS AND/OR MULCH TO STABILIZE AREAS LEFT DISTURBED FOR MORE THAN FOURTEEN (14) CALENDAR DAYS IN ACCORDANCE WITH PART III D.1 OF THE CURRENT NPDES PERMITS.
4. LIMIT THE TOTAL PLANNED SITE DISTURBANCE TO LESS THAN 15% IMPERVIOUS SURFACES (EXCLUDING ANY STATE MANDATED BUFFER AREAS FROM SUCH CALCULATIONS). ALL CALCULATIONS MUST BE INCLUDED IN THE PLAN.

Ds1 | Ds3 | Ss
Du | Fl-Co
ALL DISTURBED AREAS

*DISTURBED AREA CALCULATIONS:

PROJECT SITE: 2.14 AC
TOTAL DISTURBED AREA: 1.06 AC

DISTURBED AREA (OFF SITE): 0.14 AC
DISTURBED AREA (ON SITE): 0.92 AC
DISTURBED AREA = 0.92 AC / 2.14 AC = 43% OF PROJECT SITE
< 50% GOOD

IMPERVIOUS AREA = 1400 SF -> 0.032 AC / 1.06 AC = 3.0%

<50% GOOD
<15% GOOD

GSWCC GEORGIA SOIL AND WATER CONSERVATION COMMISSION
Delmas S Crisp III
LEVEL II CERTIFIED DESIGN PROFESSIONAL
CERTIFICATION NUMBER: 0000100336
ISSUED: 11/08/2025 EXPIRES: 11/08/2028

GEORGIA811 www.Georgia811.com

20' 10' 0' 20'
GRAPHIC SCALE 1" = 20'

ESG ENGINEERING
6400 Peake Rd
Macon, GA 31210
Ph: (478) 474-4996
Fax: (478) 474-5045

GROUNDWATER WELLS #4 & #5
FOR THE
CITY OF FLOWERY BRANCH

REVISIONS

NO.	DESCRIPTION	DATE
1	ESPC SHEETS	11-7-25
2	BID SET OF PLANS	12-1-25
3	REVISED WITH CITY COMMENTS	12-5-25

BID SET

GEORGIA REGISTERED No. PE046341 PROFESSIONAL ENGINEER ANDREW D SWICEGOOD

DRAWN BY: DSC
CHECKED BY: ADS
DATE: OCT 2025
SCALE: SEE SCALE

CONTENT:
CIVIL:
FINAL EROSION, SEDIMENTATION, & POLLUTION CONTROL PLAN

SHEET NO: 2, 3
C8.2

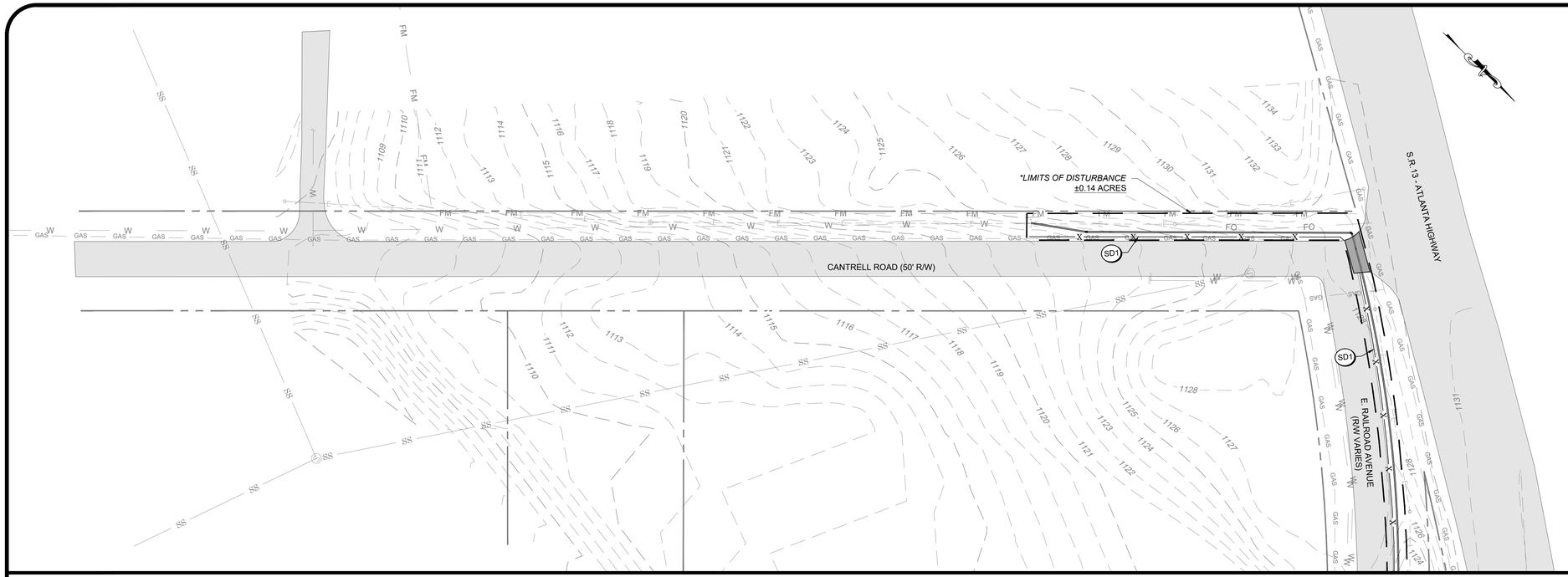

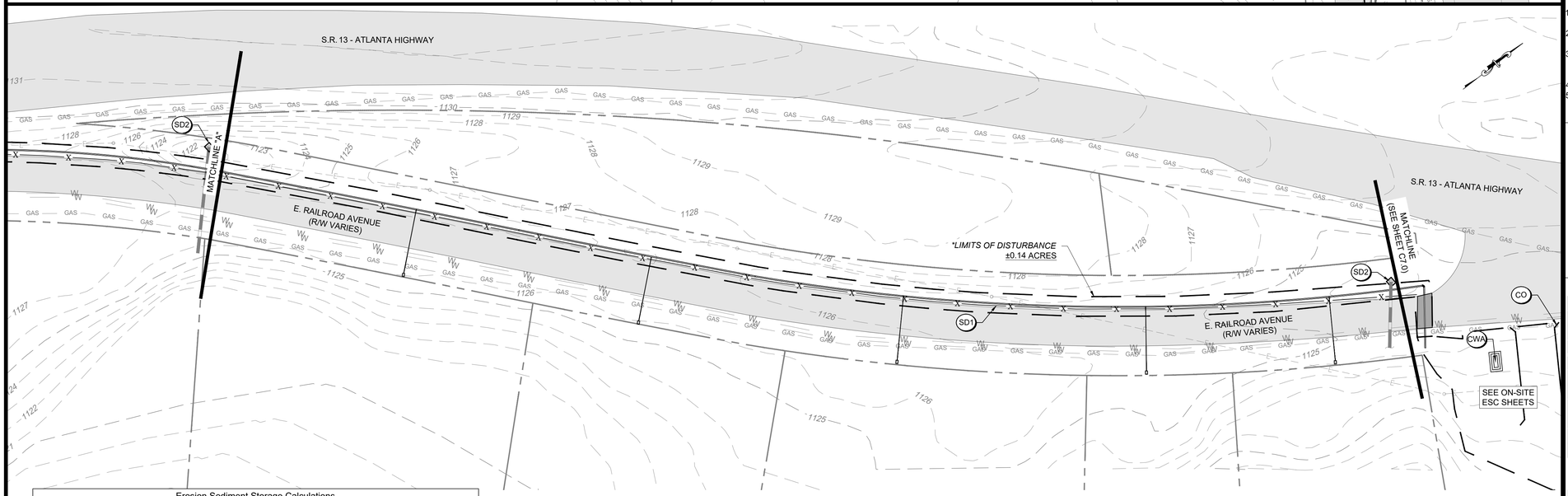

SITE INFORMATION	
PROJECT ADDRESS	4745 ATLANTA HWY
PARCEL NUMBER	08098 001001 THRU 08098 001004
PARCEL ZONING	H-B
PROJECT AREA	2.14 ACRES
BUILDING SETBACK	
FRONT	NONE
REAR	30'
SIDE	10'
LANDSCAPE SETBACK	
FRONT	10'
REAR	30'
SIDE	NONE

EROSION, SEDIMENTATION, & POLLUTION CONTROL STATEMENTS:

1. THE DESIGN PROFESSIONAL WHO PREPARED THE ES&PC PLAN IS TO INSPECT AND CERTIFY THE INSTALLATION OF THE INITIAL SEDIMENT STORAGE REQUIREMENTS AND PERIMETER CONTROL BMPS WITHIN 7 DAYS AFTER INSTALLATION.
2. NON-EXEMPT ACTIVITIES SHALL NOT BE CONDUCTED WITHIN THE 25 OR 50-FOOT UNDISTURBED STREAM BUFFERS AS MEASURED FROM THE POINT OF WRESTED VEGETATION OR WITHIN 25-FEET OF THE COASTAL MARSHLAND BUFFER AS MEASURED FROM THE JURISDICTIONAL DETERMINATION LINE WITHOUT FIRST ACQUIRING THE NECESSARY VARIANCES AND PERMITS.
3. AMENDMENTS/REVISIONS TO THE ES&PC PLAN WHICH HAVE A SIGNIFICANT EFFECT ON BMPS WITH A HYDRAULIC COMPONENT MUST BE CERTIFIED BY THE DESIGN PROFESSIONAL.
4. WASTE MATERIALS SHALL NOT BE DISCHARGED TO WATERS OF THE STATE, EXCEPT AS AUTHORIZED BY A SECTION 404 PERMIT.
5. THE ESCAPE OF SEDIMENT FROM THE SITE SHALL BE PREVENTED BY THE INSTALLATION OF EROSION AND SEDIMENT CONTROL MEASURES AND PRACTICES PRIOR TO LAND DISTURBING ACTIVITIES.
6. EROSION CONTROL MEASURES WILL BE MAINTAINED AT ALL TIMES. IF FULL IMPLEMENTATION OF THE APPROVED PLAN DOES NOT PROVIDE FOR EFFECTIVE EROSION CONTROL, ADDITIONAL EROSION AND SEDIMENT CONTROL MEASURES SHALL BE IMPLEMENTED TO CONTROL OR TREAT THE SEDIMENT SOURCE.
7. ANY DISTURBED AREA LEFT EXPOSED FOR A PERIOD GREATER THAN 14 DAYS SHALL BE STABILIZED WITH MULCH OR TEMPORARY SEEDING.

INITIAL EROSION & SEDIMENTATION CONTROL NOTES:

1. THE CONTRACTOR SHALL INSTALL ALL PERIMETER CONTROL BMPS AND CONSTRUCTION EXIT PRIOR TO ANY LAND DISTURBING ACTIVITIES.
2. THE CONTRACTOR SHALL PROVIDE DUST CONTROL FOR THE PROJECT AREA AS NEEDED BASED ON PROJECT CONDITIONS.
3. THE CONTRACTOR SHALL PERFORM DAILY INSPECTIONS / MAINTENANCE OF ALL EROSION CONTROL BMPS. SEDIMENT LADEN RUNOFF SHALL BE CONTAINED AND TREATED ON SITE.
4. THE TOTAL ON-SITE DISTURBED AREA FOR THE INITIAL PHASE IS 0.14 ACRES.
5. THE TOTAL PROJECT DISTURBED AREA (INCLUDING ON-SITE AREAS) IS 1.06 ACRES.

SEDIMENT STORAGE CALCULATIONS:

REQUIRED SEDIMENT STORAGE:
67 CUBIC YARD PER ACRE DRAINED = 67 CY/AC * 1.06 AC = 71.0 CY

PROVIDED SILT FENCE: 670 LF TYPE S SILT FENCE & 1,030 LF TYPE NS
PROVIDED SEDIMENT STORAGE (SD1): 3.75 SF*670 LF + 1.88 SF*1,030 LF = 118.0 CY
PROVIDED SEDIMENT STORAGE (SD4): 354 CY STORAGE AVAILABLE

THE TOTAL REQUIRED SEDIMENT STORAGE FOR THE INTERMEDIATE PHASE IS 71.0 CY. THE SEDIMENT STORAGE WILL BE PROVIDED BY THE SILT FENCE (SD1) AND ROCK FILTER OUTLETS.

STRUCTURAL PRACTICES

CODE	PRACTICE	DETAIL	MAP SYMBOL	DESCRIPTION
Co	CONSTRUCTION EXIT			A crushed stone pad located at the construction site exit to provide a place for removing mud from tires thereby protecting public streets.
CWA	CONCRETE WASHOUT AREA			A washdown area for tools, concrete mixer chutes, hoppers and rear of vehicles.
Sd1	SEDIMENT BARRIER			A barrier to prevent sediment from leaving the construction site. It may be sandbags, bales of straw or hay, brush, logs and poles, gravel, or a silt fence.
Rd	ROCK FILTER DAM			A temporary stone filter dam installed across drainageways or in conjunction with a temporary sediment trap
Sd2	INLET SEDIMENT TRAP			A temporary protective device formed at or around an inlet to a storm drain to trap sediment.

VEGETATIVE PRACTICES

CODE	PRACTICE	DETAIL	MAP SYMBOL	DESCRIPTION
Ds1	DISTURBED AREA STABILIZATION (WITH MULCHING ONLY)		Ds1	Establishing temporary protection for disturbed areas where seedlings may not have a suitable growing season to produce an erosion retarding cover.
Ds3	DISTURBED AREA STABILIZATION (WITH PERM.SEEDING)		Ds3	Establishing a permanent vegetative cover such as trees, shrubs, vines, grasses, or legumes on disturbed areas.
Du	DUST CONTROL ON DISTURBED AREAS		Du	Controlling surface and air movement of dust on construction site, roadways and similar sites.
Fl-Co	FLOCCULANTS & COAGGULANTS		Fl-Co	Substance formulated to assist in the solids/liquid separation of suspended particles in solution.

Erosion Sediment Storage Calculations						
Project Name:	FLOWERY BRANCH WELL PROJECT					
Project Number:	F0002.018					
Required stormwater storage =	**67**	**cy**				
disturbed area =	**1.06**	**ac**				
Required sediment storage =	67*ac	**71.0**	**cy**			
Total Required Storage =	**71.0**	**cy**				
Available Storage =	**118.0**	**cy**				
Is the Available storage greater than total required storage	**Yes**					
If no; choose method:		***Raise the invert of the OCS***				
		Undercut Pond				
		Other				
Clean-out Elevation =	**N/A**	**ft**				
clean-out storage =	22.3*ac	**55.3**	**cy**			
		1494	cf			
Is the length-width ratio 2:1 or greater	**N/A**					
If no; choose method:		***Baffles***				
		other				
Half round CMP retrofit:						
Diameter =	**N/A**	**ft**				
Height =	**N/A**	**ft**				

Ds1	Ds3
Du	Fl-Co

ALL DISTURBED AREAS

DISTURBED AREA CALCULATIONS:

PROJECT SITE: 2.14 AC
TOTAL DISTURBED AREA: 1.06 AC

DISTURBED AREA (OFF SITE): 0.14 AC
DISTURBED AREA (ON SITE): 0.92 AC
DISTURBED AREA = 0.92 AC / 2.14 AC = 43% OF PROJECT SITE
< 50% GOOD

IMPERVIOUS AREA = 1400 SF -> 0.032 AC / 1.06 AC = 3.0%

<50% GOOD
<15% GOOD

NRCS WEB SOIL SURVEY

SYMBOL	NAME	HYDROLOGIC SOIL GROUP	UNIFIED SOIL CLASSIFICATION	DEPTH
ApC	APPLING SANDY LOAM	B	Ap	0"-8"
			BA	8"-15"
			Bt	15"-42"
			BC	42"-55"
			C	55"-60"
PuD2	PACOLET SOILS	B	H1	0"-3"
			H2	3"-29"
			H3	29"-52"
			H4	52"-70"

APPENDIX 1 - IMPAIRED STREAM BMPS:

1. REDUCE THE TOTAL PLANNED SITE DISTURBANCE TO LESS THAN 50% IMPERVIOUS SURFACES (EXCLUDING ANY STATE-MANDATED BUFFER AREAS FROM SUCH CALCULATIONS). ALL CALCULATIONS MUST BE INCLUDED ON THE PLAN.
2. LIMIT THE AMOUNT OF DISTURBED AREA AT ANY ONE TIME TO NO GREATER THAN 25 ACRES OR 50% OF THE TOTAL PLANNED SITE, WHICHEVER IS LESS. ALL CALCULATIONS MUST BE INCLUDED ON THE PLAN.
3. USE FLOCCULENTS OR COAGULANTS AND/OR MULCH TO STABILIZE AREAS LEFT DISTURBED FOR MORE THAN FOURTEEN (14) CALENDAR DAYS IN ACCORDANCE WITH PART III D.1 OF THE CURRENT NPDES PERMITS.
4. LIMIT THE TOTAL PLANNED SITE DISTURBANCE TO LESS THAN 15% IMPERVIOUS SURFACES (EXCLUDING ANY STATE MANDATED BUFFER AREAS FROM SUCH CALCULATIONS). ALL CALCULATIONS MUST BE INCLUDED IN THE PLAN.

30' 15' 0' 30'
GRAPHIC SCALE 1" = 30'

GSWCC GEORGIA SOIL AND WATER CONSERVATION COMMISSION
Delmas S Crisp III
LEVEL II CERTIFIED DESIGN PROFESSIONAL
CERTIFICATION NUMBER: 0000100336
ISSUED: 11/08/2025 EXPIRES: 11/08/2028

GEORGIA811 www.Georgia811.com

ESG ENGINEERING
6400 Peake Rd
Macon, GA 31210
Ph: (478) 474-4996
Fax: (478) 474-5045

GROUNDWATER WELLS #4 & #5

FOR THE
CITY OF FLOWERY BRANCH

REVISIONS

NO.	DESCRIPTION	DATE
1	ESPC SHEETS	11-7-25
2	BID SET OF PLANS	12-1-25
3	REVISED WITH CITY COMMENTS	12-5-25

BID SET

GEORGIA REGISTERED No. PE046341 PROFESSIONAL ENGINEER ANDREW D SWICEGOOD

DRAWN BY: DSC
CHECKED BY: ADS
DATE: OCT 2025
SCALE: SEE SCALE

CONTENT:

CIVIL:
INITIAL ESPC - WATER MAIN EXTENSION

SHEET NO: 2 3
C8.3

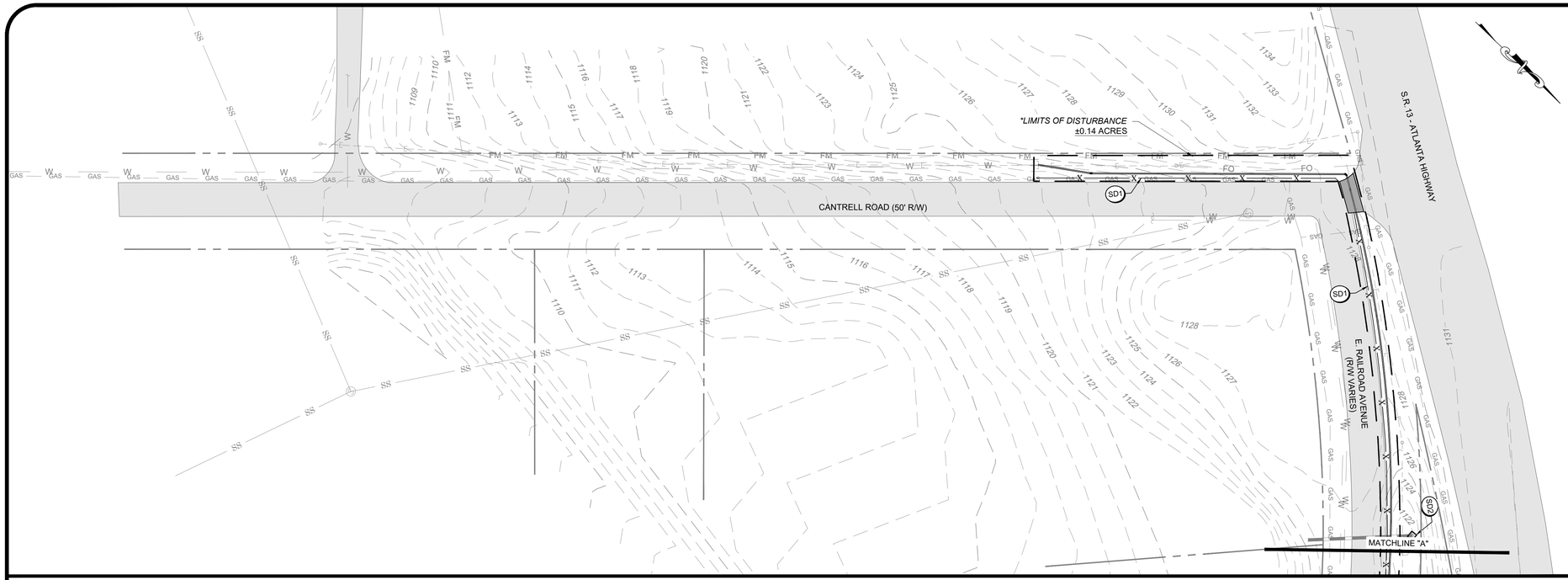

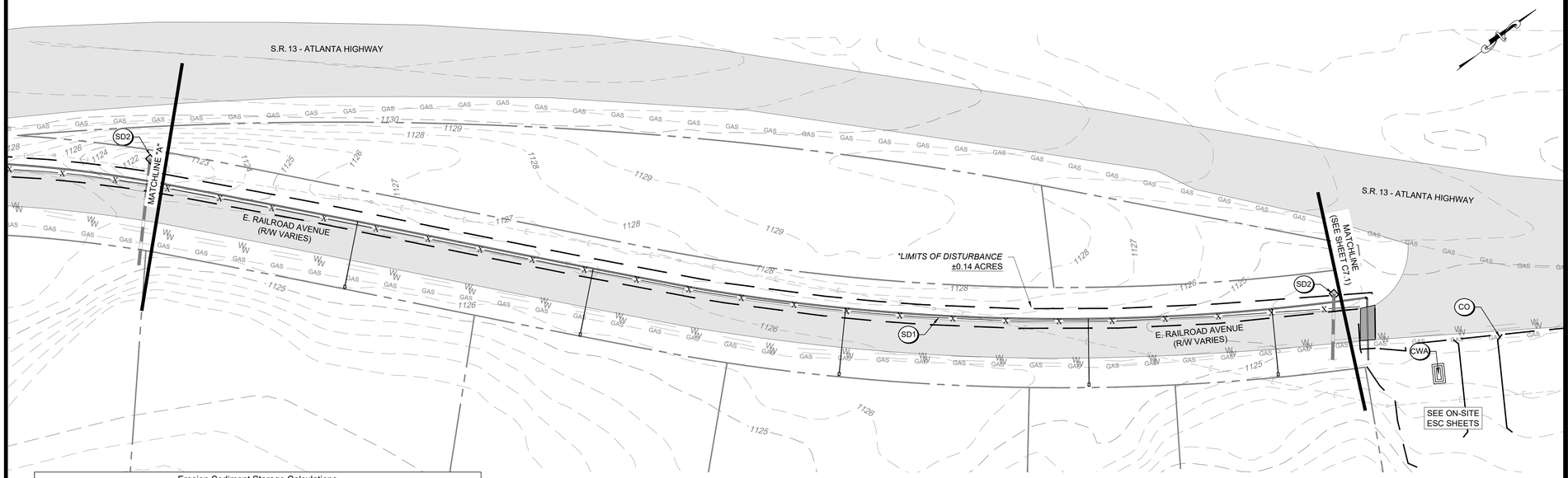

SITE INFORMATION	
PROJECT ADDRESS	4745 ATLANTA HWY
PARCEL NUMBER	08098 001001 THRU 08098 001004
PARCEL ZONING	H-B
PROJECT AREA	2.14 ACRES
BUILDING SETBACK	
FRONT	NONE
REAR	30'
SIDE	10'
LANDSCAPE SETBACK	
FRONT	10'
REAR	30'
SIDE	NONE

EROSION, SEDIMENTATION, & POLLUTION CONTROL STATEMENTS:

1. THE DESIGN PROFESSIONAL WHO PREPARED THE ES&PC PLAN IS TO INSPECT AND CERTIFY THE INSTALLATION OF THE INITIAL SEDIMENT STORAGE REQUIREMENTS AND PERIMETER CONTROL BMPS WITHIN 7 DAYS AFTER INSTALLATION.
2. NON-EXEMPT ACTIVITIES SHALL NOT BE CONDUCTED WITHIN THE 25 OR 50-FOOT UNDISTURBED STREAM BUFFERS AS MEASURED FROM THE POINT OF WRESTED VEGETATION OR WITHIN 25-FEET OF THE COASTAL MARSHLAND BUFFER AS MEASURED FROM THE JURISDICTIONAL DETERMINATION LINE WITHOUT FIRST ACQUIRING THE NECESSARY VARIANCES AND PERMITS.
3. AMENDMENTS/REVISIONS TO THE ES&PC PLAN WHICH HAVE A SIGNIFICANT EFFECT ON BMPS WITH A HYDRAULIC COMPONENT MUST BE CERTIFIED BY THE DESIGN PROFESSIONAL.
4. WASTE MATERIALS SHALL NOT BE DISCHARGED TO WATERS OF THE STATE, EXCEPT AS AUTHORIZED BY A SECTION 404 PERMIT.
5. THE ESCAPE OF SEDIMENT FROM THE SITE SHALL BE PREVENTED BY THE INSTALLATION OF EROSION AND SEDIMENT CONTROL MEASURES AND PRACTICES PRIOR TO LAND DISTURBING ACTIVITIES.
6. EROSION CONTROL MEASURES WILL BE MAINTAINED AT ALL TIMES. IF FULL IMPLEMENTATION OF THE APPROVED PLAN DOES NOT PROVIDE FOR EFFECTIVE EROSION CONTROL, ADDITIONAL EROSION AND SEDIMENT CONTROL MEASURES SHALL BE IMPLEMENTED TO CONTROL OR TREAT THE SEDIMENT SOURCE.
7. ANY DISTURBED AREA LEFT EXPOSED FOR A PERIOD GREATER THAN 14 DAYS SHALL BE STABILIZED WITH MULCH OR TEMPORARY SEEDING.

INTERMEDIATE EROSION & SEDIMENTATION CONTROL NOTES:

1. CONTRACTOR SHALL INSTALL CONCRETE WASH AREA. CONCRETE WASH AREA SHALL BE USED FOR WASHDOWN OF TOOLS, CONCRETE MIXER CHUTES, HOPPERS AND REAR OF THE VEHICLES ONLY. WASHOUT OF THE DRUM AT THE CONSTRUCTION SITE IS PROHIBITED.
2. THE CONTRACTOR SHALL PROVIDE DUST CONTROL FOR THE PROJECT AREA AS NEEDED BASED ON PROJECT CONDITIONS.
3. THE CONTRACTOR SHALL PERFORM DAILY INSPECTIONS / MAINTENANCE OF ALL EROSION CONTROL BMPS. SEDIMENT LADEN RUNOFF SHALL BE CONTAINED AND TREATED ON SITE.
4. THE PRIMARY PERMITTEE WILL RETAIN ESG (THE DESIGN PROFESSIONAL) DURING ALL PHASES OF ESPC.
4. THE TOTAL ON-SITE DISTURBED AREA FOR THE INITIAL PHASE IS 0.14 ACRES.
5. THE TOTAL PROJECT DISTURBED AREA (INCLUDING ON-SITE AREAS) IS 1.06 ACRES.

SEDIMENT STORAGE CALCULATIONS:

REQUIRED SEDIMENT STORAGE:
67 CUBIC YARD PER ACRE DRAINED = 67 CY/AC * 1.06 AC = 71.0 CY

PROVIDED SILT FENCE: 670 LF TYPE S SILT FENCE & 1,030 LF TYPE NS
PROVIDED SEDIMENT STORAGE (SD1): 3.75 SF*670 LF + 1.88 SF*1,030 LF = 118.0 CY
PROVIDED SEDIMENT STORAGE (SD4): 354 CY STORAGE AVAILABLE

THE TOTAL REQUIRED SEDIMENT STORAGE FOR THE INTERMEDIATE PHASE IS 71.0 CY. THE SEDIMENT STORAGE WILL BE PROVIDED BY THE SILT FENCE (SD1) AND ROCK FILTER OUTLETS.

STRUCTURAL PRACTICES

CODE	PRACTICE	DETAIL	MAP SYMBOL	DESCRIPTION
Co	CONSTRUCTION EXIT			A crushed stone pad located at the construction site exit to provide a place for removing mud from tires thereby protecting public streets.
CWA	CONCRETE WASHOUT AREA			A washdown area for tools, concrete mixer chutes, hoppers and rear of vehicles.
Sd1	SEDIMENT BARRIER			A barrier to prevent sediment from leaving the construction site. It may be sandbags, bales of straw or hay, brush, logs and poles, gravel, or a silt fence.
Sd2	INLET SEDIMENT TRAP			A temporary protective device formed at or around an inlet to a storm drain to trap sediment.
Rd	ROCK FILTER DAM			A temporary stone filter dam installed across drainageways or in conjunction with a temporary sediment trap

VEGETATIVE PRACTICES

CODE	PRACTICE	DETAIL	MAP SYMBOL	DESCRIPTION
Ds1	DISTURBED AREA STABILIZATION (WITH MULCHING ONLY)		Ds1	Establishing temporary protection for disturbed areas where seedlings may not have a suitable growing season to produce an erosion retarding cover.
Ds3	DISTURBED AREA STABILIZATION (WITH PERMSEEDING)		Ds3	Establishing a permanent vegetative cover such as trees, shrubs, vines, grasses, or legumes on disturbed areas.
Du	DUST CONTROL ON DISTURBED AREAS		Du	Controlling surface and air movement of dust on construction site, roadways and similar sites.
Fl-Co	FLOCCULANTS & COAGULANTS		Fl-Co	Substance formulated to assist in the solids/liquid separation of suspended particles in solution.

Erosion Sediment Storage Calculations

Project Name:	FLOWERY BRANCH WELL PROJECT					
Project Number:	F0002.018					
Required stormwater storage =	**67**	**cy**				
disturbed area =	**1.06**	**ac**				
Required sediment storage =	67*ac	**71.0**	**cy**			
Total Required Storage =	**71.0**	**cy**				
Available Storage =	**118.0**	**cy**				
Is the Available storage greater than total required storage	**Yes**					
If no; choose method:		***Raise the invert of the OCS***				
		Undercut Pond				
		Other				
Clean-out Elevation =	**N/A**	**ft**				
clean-out storage =	22.3*ac	**55.3**	**cy**			
		1494	cf			
Is the length-width ratio 2:1 or greater	**N/A**					
If no; choose method:		***Baffles***				
		other				
Half round CMP retrofit:						
Diameter =	**N/A**	**ft**				
Height =	**N/A**	**ft**				

Ds1	Ds3
Du	Fl-Co

ALL DISTURBED AREAS

**DISTURBED AREA CALCULATIONS:*

PROJECT SITE: 2.14 AC
TOTAL DISTURBED AREA: 1.06 AC

DISTURBED AREA (OFF SITE): 0.14 AC
DISTURBED AREA (ON SITE): 0.92 AC
DISTURBED AREA = 0.92 AC / 2.14 AC = 43% OF PROJECT SITE
< 50% GOOD

IMPERVIOUS AREA = 1400 SF -> 0.032 AC / 1.06 AC = 3.0%

<50% GOOD
<15% GOOD

NRCS WEB SOIL SURVEY

SYMBOL	NAME	HYDROLOGIC SOIL GROUP	UNIFIED SOIL CLASSIFICATION	DEPTH
ApC	APPLING SANDY LOAM	B	Ap	0"-8"
			BA	8"-15"
			Bt	15"-42"
			BC	42"-55"
			C	55"-60"
PuD2	PACOLET SOILS	B	H1	0"-3"
			H2	3"-29"
			H3	29"-52"
			H4	52"-70"

APPENDIX 1 - IMPAIRED STREAM BMPS:

1. REDUCE THE TOTAL PLANNED SITE DISTURBANCE TO LESS THAN 50% IMPERVIOUS SURFACES (EXCLUDING ANY STATE-MANDATED BUFFER AREAS FROM SUCH CALCULATIONS). ALL CALCULATIONS MUST BE INCLUDED ON THE PLAN.
2. LIMIT THE AMOUNT OF DISTURBED AREA AT ANY ONE TIME TO NO GREATER THAN 25 ACRES OR 50% OF THE TOTAL PLANNED SITE, WHICHEVER IS LESS. ALL CALCULATIONS MUST BE INCLUDED ON THE PLAN.
3. USE FLOCCULENTS OR COAGULANTS AND/OR MULCH TO STABILIZE AREAS LEFT DISTURBED FOR MORE THAN FOURTEEN (14) CALENDAR DAYS IN ACCORDANCE WITH PART III D.1 OF THE CURRENT NPDES PERMITS.
4. LIMIT THE TOTAL PLANNED SITE DISTURBANCE TO LESS THAN 15% IMPERVIOUS SURFACES (EXCLUDING ANY STATE MANDATED BUFFER AREAS FROM SUCH CALCULATIONS). ALL CALCULATIONS MUST BE INCLUDED IN THE PLAN.

30' 15' 0' 30'
GRAPHIC SCALE 1" = 30'

GSWCC GEORGIA SOIL AND WATER CONSERVATION COMMISSION
Delmas S Crisp III
LEVEL II CERTIFIED DESIGN PROFESSIONAL
CERTIFICATION NUMBER: 0000100336
ISSUED: 11/08/2025 EXPIRES: 11/08/2028

GEORGIA811 www.Georgia811.com

ESG ENGINEERING
6400 Peake Rd
Macon, GA 31210
Ph: (478) 474-4996
Fax: (478) 474-5045

GROUNDWATER WELLS #4 & #5

FOR THE
CITY OF FLOWERY BRANCH

REVISIONS

NO.	DESCRIPTION	DATE
1	ESPC SHEETS	11-7-25
2	BID SET OF PLANS	12-1-25
3	REVISED WITH CITY COMMENTS	12-5-25

BID SET

GEORGIA REGISTERED No. PE046341 PROFESSIONAL ENGINEER ANDREW D SWICEGOOD

DRAWN BY: DSC
CHECKED BY: ADS
DATE: OCT 2025
SCALE: SEE SCALE

CONTENT:

CIVIL:
INTERMEDIATE ESCP - WATER MAIN EXTENSION

SHEET NO: 2 3
C8.4

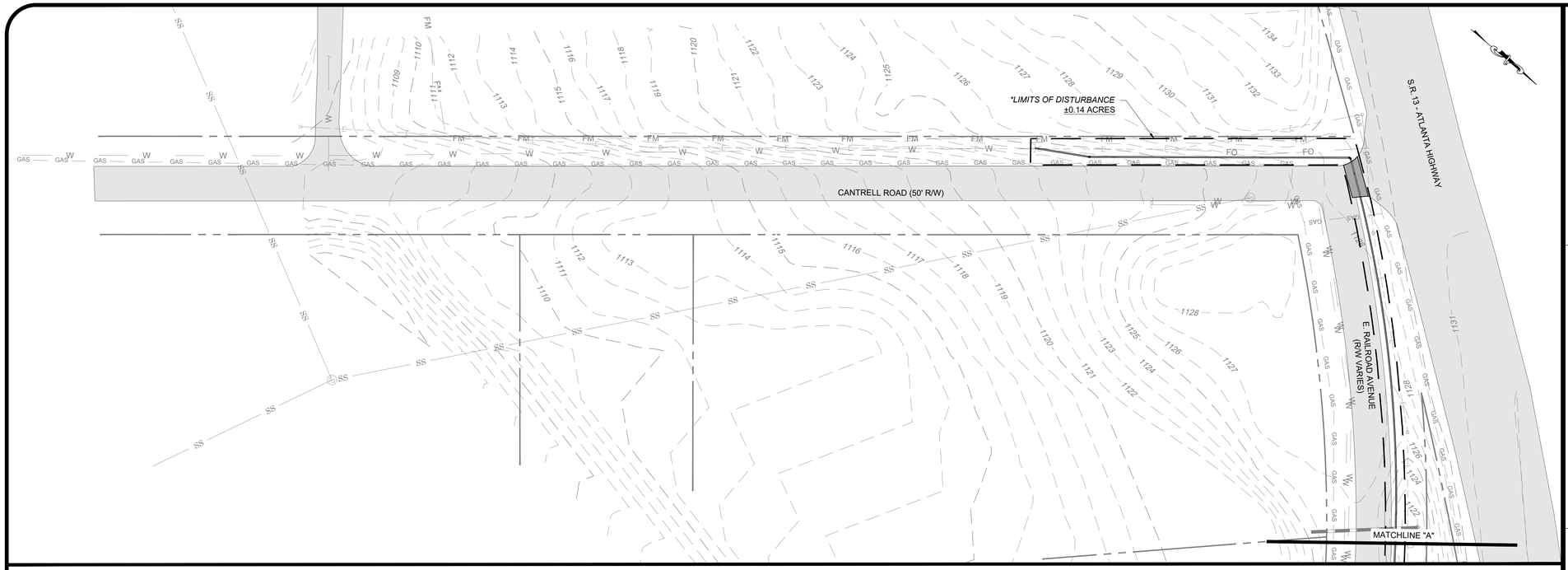

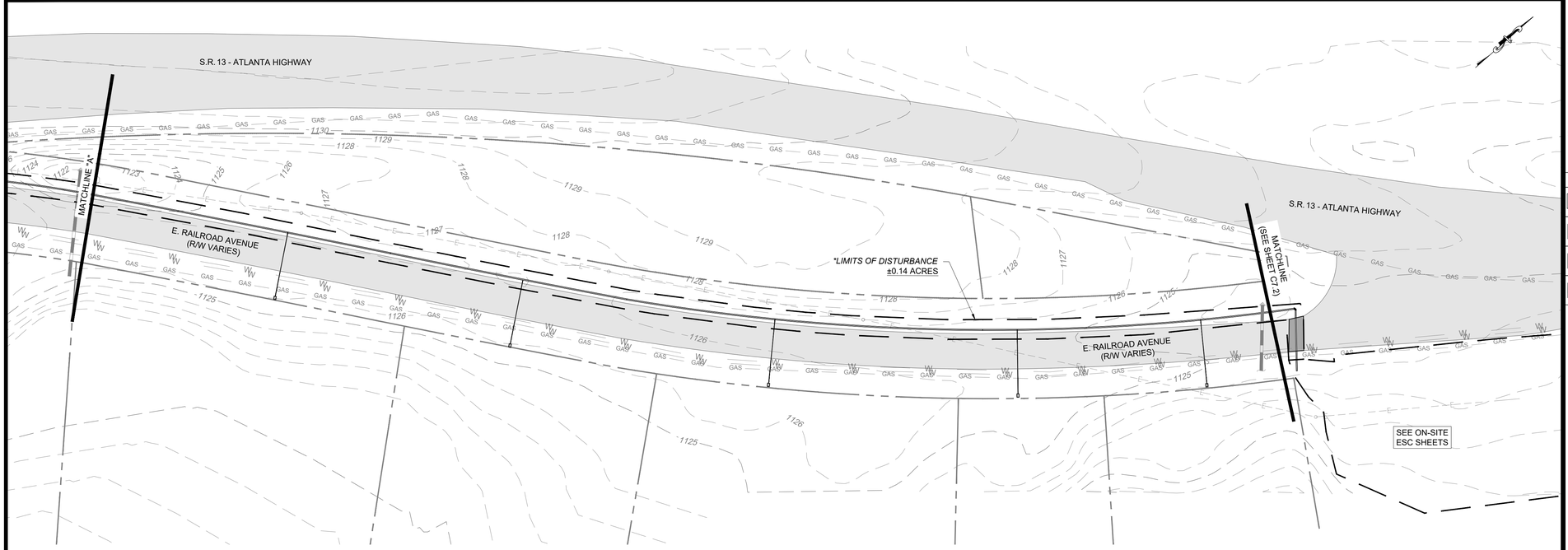

SITE INFORMATION	
PROJECT ADDRESS	4745 ATLANTA HWY
PARCEL NUMBER	08098 001001 THRU 08098 001004
PARCEL ZONING	H-B
PROJECT AREA	2.14 ACRES
BUILDING SETBACK	
FRONT	NONE
REAR	30'
SIDE	10'
LANDSCAPE SETBACK	
FRONT	10'
REAR	30'
SIDE	NONE

EROSION, SEDIMENTATION, & POLLUTION CONTROL STATEMENTS:

1. THE DESIGN PROFESSIONAL WHO PREPARED THE ES&PC PLAN IS TO INSPECT AND CERTIFY THE INSTALLATION OF THE INITIAL SEDIMENT STORAGE REQUIREMENTS AND PERIMETER CONTROL BMPS WITHIN 7 DAYS AFTER INSTALLATION.
2. NON-EXEMPT ACTIVITIES SHALL NOT BE CONDUCTED WITHIN THE 25 OR 50-FOOT UNDISTURBED STREAM BUFFERS AS MEASURED FROM THE POINT OF WRESTED VEGETATION OR WITHIN 25-FEET OF THE COASTAL MARSHLAND BUFFER AS MEASURED FROM THE JURISDICTIONAL DETERMINATION LINE WITHOUT FIRST ACQUIRING THE NECESSARY VARIANCES AND PERMITS.
3. AMENDMENTS/REVISIONS TO THE ES&PC PLAN WHICH HAVE A SIGNIFICANT EFFECT ON BMPS WITH A HYDRAULIC COMPONENT MUST BE CERTIFIED BY THE DESIGN PROFESSIONAL.
4. WASTE MATERIALS SHALL NOT BE DISCHARGED TO WATERS OF THE STATE, EXCEPT AS AUTHORIZED BY A SECTION 404 PERMIT.
5. THE ESCAPE OF SEDIMENT FROM THE SITE SHALL BE PREVENTED BY THE INSTALLATION OF EROSION AND SEDIMENT CONTROL MEASURES AND PRACTICES PRIOR TO LAND DISTURBING ACTIVITIES.
6. EROSION CONTROL MEASURES WILL BE MAINTAINED AT ALL TIMES. IF FULL IMPLEMENTATION OF THE APPROVED PLAN DOES NOT PROVIDE FOR EFFECTIVE EROSION CONTROL, ADDITIONAL EROSION AND SEDIMENT CONTROL MEASURES SHALL BE IMPLEMENTED TO CONTROL OR TREAT THE SEDIMENT SOURCE.
7. ANY DISTURBED AREA LEFT EXPOSED FOR A PERIOD GREATER THAN 14 DAYS SHALL BE STABILIZED WITH MULCH OR TEMPORARY SEEDING.

FINAL EROSION & SEDIMENTATION CONTROL NOTES:

1. CONTRACTOR SHALL INSTALL CONCRETE WASH AREA. CONCRETE WASH AREA SHALL BE USED FOR WASHDOWN OF TOOLS, CONCRETE MIXER CHUTES, HOPPERS AND REAR OF THE VEHICLES ONLY. WASHOUT OF THE DRUM AT THE CONSTRUCTION SITE IS PROHIBITED.
2. THE CONTRACTOR SHALL REMOVE ALL TEMPORARY BMPS ONCE FINAL STABILIZATION HAS BEEN MET.
3. THE CONTRACTOR SHALL PERFORM DAILY INSPECTIONS / MAINTENANCE OF ALL EROSION CONTROL BMPS. SEDIMENT LADEN RUNOFF SHALL BE CONTAINED AND TREATED ON SITE.
4. THE PRIMARY PERMITTEE WILL RETAIN THE DESIGN PROFESSIONAL DURING THE INTERMEDIATE GRADING AND DRAINAGE BMP PHASE, AS WELL AS, THE FINAL BMP PHASE.
4. THE TOTAL ON-SITE DISTURBED AREA FOR THE INITIAL PHASE IS 0.14 ACRES.
5. THE TOTAL PROJECT DISTURBED AREA (INCLUDING ON-SITE AREAS) IS 1.06 ACRES.

VEGETATIVE PRACTICES

CODE	PRACTICE	DETAIL	MAP SYMBOL	DESCRIPTION
Ds1	DISTURBED AREA STABILIZATION (WITH MULCHING ONLY)		Ds1	Establishing temporary protection for disturbed areas where seedlings may not have a suitable growing season to produce an erosion retarding cover.
Ds3	DISTURBED AREA STABILIZATION (WITH PERM SEEDING)		Ds3	Establishing a permanent vegetative cover such as trees, shrubs, vines, grasses, or legumes on disturbed areas.
Du	DUST CONTROL ON DISTURBED AREAS		Du	Controlling surface and air movement of dust on construction site, roadways and similar sites.
Fl-Co	FLOCCULANTS & COAGGULANTS		Fl-Co	Substance formulated to assist in the solids/liquid separation of suspended particles in solution.

Ds1	Ds3
Du	Fl-Co

ALL DISTURBED AREAS

DISTURBED AREA CALCULATIONS:

PROJECT SITE: 2.14 AC
TOTAL DISTURBED AREA: 1.06 AC

DISTURBED AREA (OFF SITE): 0.14 AC
DISTURBED AREA (ON SITE): 0.92 AC
DISTURBED AREA = 0.92 AC / 2.14 AC = 43% OF PROJECT SITE
< 50% GOOD

IMPERVIOUS AREA = 1400 SF -> 0.032 AC / 1.06 AC = 3.0%

<50% GOOD
<15% GOOD

NRCS WEB SOIL SURVEY

SYMBOL	NAME	HYDROLOGIC SOIL GROUP	UNIFIED SOIL CLASSIFICATION	DEPTH
ApC	APPLING SANDY LOAM	B	Ap	0"-8"
			BA	8"-15"
			Bt	15"-42"
			BC	42"-55"
			C	55"-60"
PuD2	PACOLET SOILS	B	H1	0"-3"
			H2	3"-29"
			H3	29"-52"
			H4	52"-70"

APPENDIX 1 - IMPAIRED STREAM BMPS:

1. REDUCE THE TOTAL PLANNED SITE DISTURBANCE TO LESS THAN 50% IMPERVIOUS SURFACES (EXCLUDING ANY STATE-MANDATED BUFFER AREAS FROM SUCH CALCULATIONS). ALL CALCULATIONS MUST BE INCLUDED ON THE PLAN.
2. LIMIT THE AMOUNT OF DISTURBED AREA AT ANY ONE TIME TO NO GREATER THAN 25 ACRES OR 50% OF THE TOTAL PLANNED SITE, WHICHEVER IS LESS. ALL CALCULATIONS MUST BE INCLUDED ON THE PLAN.
3. USE FLOCCULENTS OR COAGULANTS AND/OR MULCH TO STABILIZE AREAS LEFT DISTURBED FOR MORE THAN FOURTEEN (14) CALENDAR DAYS IN ACCORDANCE WITH PART III D.1 OF THE CURRENT NPDES PERMITS.
4. LIMIT THE TOTAL PLANNED SITE DISTURBANCE TO LESS THAN 15% IMPERVIOUS SURFACES (EXCLUDING ANY STATE MANDATED BUFFER AREAS FROM SUCH CALCULATIONS). ALL CALCULATIONS MUST BE INCLUDED IN THE PLAN.

30' 15' 0' 30'
GRAPHIC SCALE 1" = 30'

GSWCC GEORGIA SOIL AND WATER CONSERVATION COMMISSION
Delmas S Crisp III
LEVEL II CERTIFIED DESIGN PROFESSIONAL
CERTIFICATION NUMBER: 0000100336
ISSUED: 11/08/2025 EXPIRES: 11/08/2028

GEORGIA811 www.Georgia811.com

ESG ENGINEERING
6400 Peake Rd
Macon, GA 31210
Ph: (478) 474-4996
Fax: (478) 474-5045

GROUNDWATER WELLS #4 & #5

FOR THE
CITY OF FLOWERY BRANCH

REVISIONS

NO.	DESCRIPTION	DATE
1	ESPC SHEETS	11-7-25
2	BID SET OF PLANS	12-1-25
3	REVISED WITH CITY COMMENTS	12-5-25

BID SET

GEORGIA REGISTERED No. PE046341 PROFESSIONAL ENGINEER ANDREW D SWICEGOOD

DRAWN BY: DSC
CHECKED BY: ADS
DATE: OCT 2025
SCALE: SEE SCALE

CONTENT:

CIVIL:
FINAL ESCP - WATER MAIN EXTENSION

SHEET NO: 2 3
C8.5

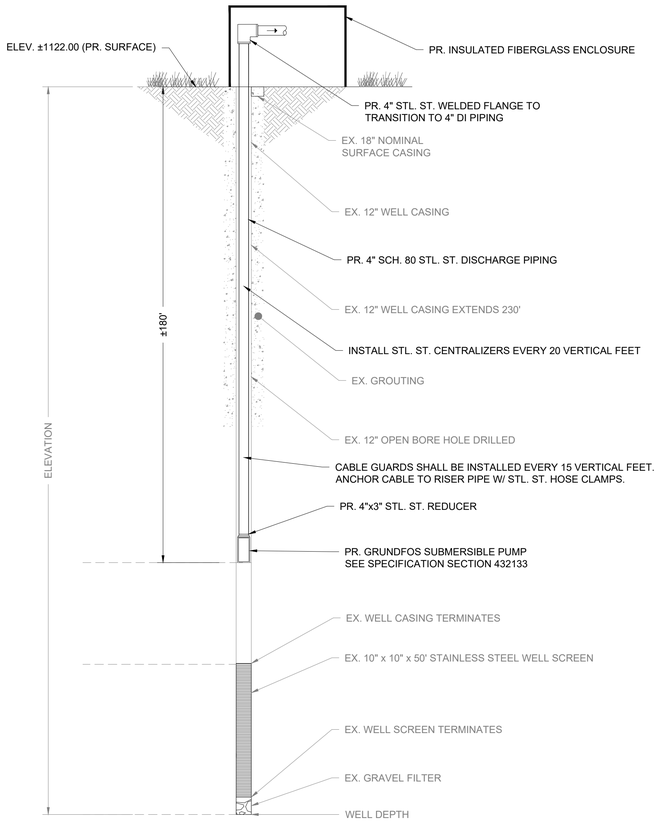

HENDERSON WELL SECTION
NOT TO SCALE

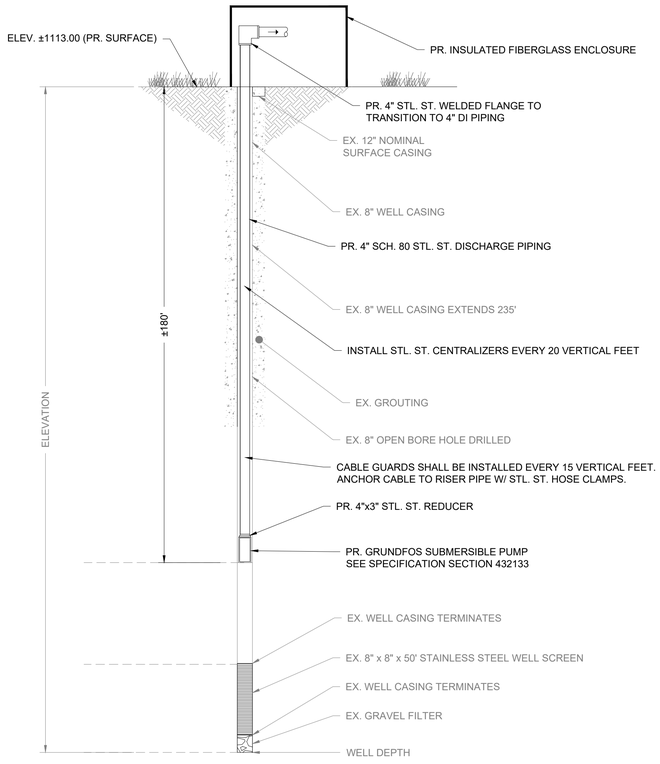

WATERSTONE WELL SECTION
NOT TO SCALE

NOTES:

1. PRECAST CONCRETE VAULT SHALL BE BY TINDALL OR APPROVED EQUIVALENT.
2. VAULT SHALL NOT BE LOCATED IN AREA SUBJECT TO GROUND WATER RUNOFF, STORM DRAIN COLLECTION AND DISCHARGE, OR AREAS PRONE TO CONSTANT WATER INFILTRATION. VAULT SHALL BE ABLE TO DRAIN BY GRAVITY OR BY ALTERNATE MEANS.
3. HATCH DOOR TO BE LOCATED OVER METER ASSEMBLY FOR EASE OF REMOVAL.
4. CONTRACTOR TO SEAL ALL OPENINGS IN VAULT WITH LS-200 LINK SEAL & NON-SHRINK GROUT.
5. FOR FINAL APPROVAL, ASSEMBLY MUST BE SET IN VAULT AS SPECIFIED. UNDER NO CONDITION WILL ANY CONNECTION BE ALLOWED BETWEEN THE SERVICE METER AND BACKFLOW PREVENTER USED FOR SYSTEM CONTAINMENT. BACKFLOW PREVENTER SHALL BE INSTALLED DOWNSTREAM OF ALL METERS.
6. ALL BACKFLOW PREVENTION DEVICES MUST BE SUCCESSFULLY TESTED PRIOR TO FINAL ACCEPTANCE BY THE ENGINEER.

MATERIALS		
ITEM	QTY	DESCRIPTION
1	1	6'x8' PRECAST CONCRETE VAULT
2	1	ALUMINUM HATCH W/ LOCKING HASP
3	1	WALL-MOUNTED STEEL LADDER
4	1	6" 709DCDA DOUBLE CHECK DETECTOR ASSEMBLY
5	1	#57 STONE DRAIN
6	3	STANDON S-89 FLANGED PIPE SUPPORT
7	2	6" FLxRJ DUCTILE IRON PIPE SPOOL PIECE
8	2	6" MECHANICAL JOINT W/ MEGALUG (OR EQUIVALENT)
9	2	LS-200 LINK SEAL

BACKFLOW VAULT NOTES
NOT-TO-SCALE

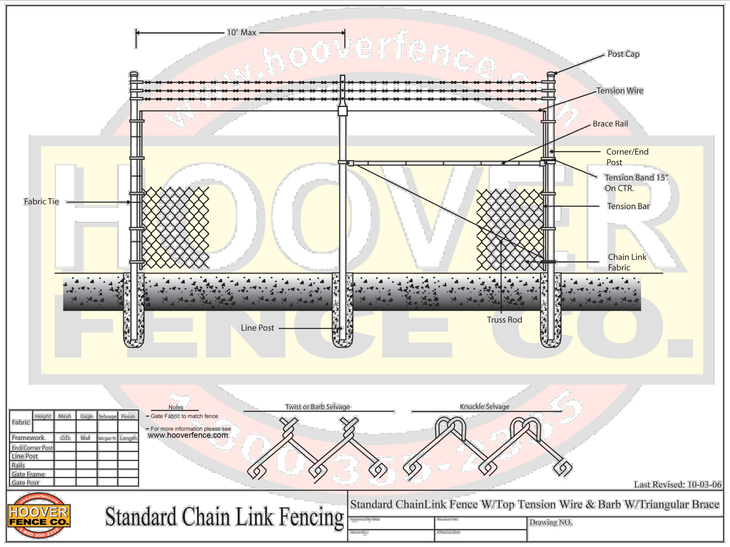

*OTHER EQUAL ALTERNATIVES CAN BE UTILIZED

CHAIN LINK FENCE
NOT TO SCALE

INSULATED FIBERGLASS ENCLOSURE SIZING GRID

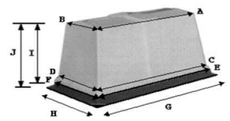

	OUTSIDE TOP	LOWER COVER	BOTTOM AT UPPER BASE	OUSIDE BASE FLANGE	COVER HEIGHT	OVERALL HEIGHT
MODEL #	A—B	C—D	E—F	G—H	I	J
D-103	20.75 x 6.00	27.25 x 12.25	30.25 x 14.75	33.75 x 18.25	21.5	23.25
D-104	31.75 x 5.75	38.25 x 12.25	41.25 x 15	44.25 x 18	20.75	23.5
D-102	22.25 x 15.75	26.5 x 20	29 x 22.25	33 x 26.25	25.75	28.5
D-102-39	22.25 x 15.75	25.75 x 19.25	31 x 25	34 x 27.75	25.75	39
D-105	41.25 x 17.50	47 x 22.75	49 x 25	53.5 x 29.5	23.5	25.5
D-105-36	41.25 x 17.50	47 x 22.75	52 x 28	55 x 31	23.5	36
D-100	30 x 20.75	41.5 x 32.5	44 x 35	48.5 x 39.75	34.75	37
D-106	39 x 31.25	49 x 40.5	50.75 x 42.5	54.75 x 46.5	40	43.5
D-207	48.75 x 32	55.5 x 37.5	59.5 x 40.5	65 x 46	35.5	37.25
D-207-48	48.75 x 32	55.5 x 37.5	63 x 44	65.5 x 47	35.5	48
D-108	64.5 x 31.5	68.5 x 34.5	70.5 x 36.5	74.5 x 40.5	44.25	46.25
D-301	74.63 x 46.5	82.5 x 54.5	86.5 x 59	90.5 x 63	26.75	33.75
D-303	74.63 x 46.5	82.5 x 54.5	86.5 x 59	90.5 x 63	46	53

GENERAL SPECIFICATIONS

The molded fiberglass enclosure shall be constructed with rigid thixotropic polyester resin and 30% chopped glass in 1-1/2 to 2-inch random patterns of 1/8 to 3/16 inch thick. The exterior finish shall be White isophthalic gel-coating .02 to .04 inches. The inside surface shall be insulated with 2 lb.-density sprayed-on polyurethane foam, producing an R-14 to R-19 composite value. The fiberglass base flange shall be hinged using 3-1/2-inch noncorrosive polycross link hinges or 3 x 4-inch stainless steel. A 30 lb. spring-loaded latch hooks to a 7-inch cast aluminum handle.

WELL HOUSE FIBERGLASS ENCLOSURE DETAIL
NOT-TO-SCALE

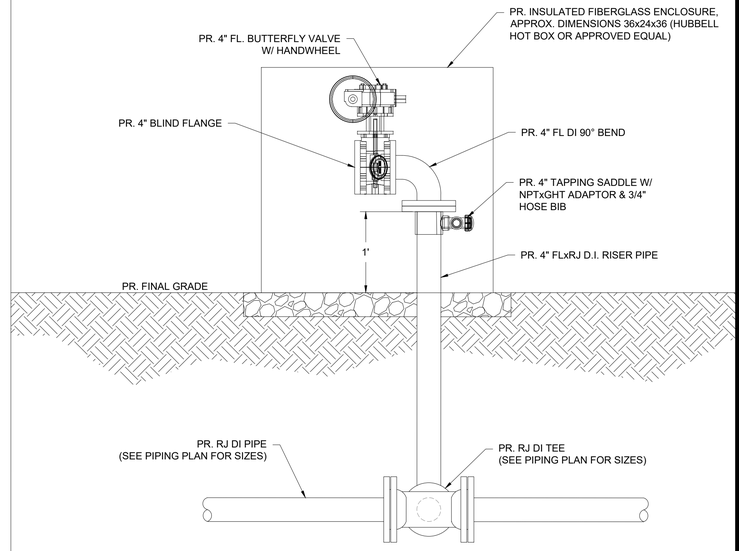

WELL BLOW-OFF VALVE DETAIL
NOT-TO-SCALE

ESG ENGINEERING
6400 Peake Rd
Macon, GA 31210
Ph: (478) 474-4996
Fax: (478) 474-5045

GROUNDWATER WELLS #4 & #5

FOR THE

CITY OF FLOWERY BRANCH

REVISIONS

NO.	DESCRIPTION	DATE
1	ESPC SHEETS	11-7-25
2	BID SET OF PLANS	12-1-25
3	REVISED WITH CITY COMMENTS	12-5-25

BID SET

GEORGIA REGISTERED No. PE046341 PROFESSIONAL ENGINEER ANDREW D. SWICEGOOD

DRAWN BY: DSC
CHECKED BY: ADS
DATE: OCT 2025
SCALE: N.T.S.

CONTENT:

CONSTRUCTION DETAILS

SHEET NO: 3

C9.3

*DISTURBED AREA CALCULATIONS:

PROJECT SITE: 2.14 AC
TOTAL DISTURBED AREA: 1.06 AC

DISTURBED AREA (OFF SITE): 0.14 AC
DISTURBED AREA (ON SITE): 0.92 AC
DISTURBED AREA = 0.92 AC / 2.14 AC = 43% OF PROJECT SITE
< 50% GOOD

IMPERVIOUS AREA = 1400 SF -> 0.032 AC / 1.06 AC = 3.0%

<50% GOOD
<15% GOOD

STATE ROUTE 13
(100' RIGHT-OF-WAY)

RAILROAD AVENUE

AMERICAN HOLLY (TYP.)

FLOWERING DOGWOOD (TYP.)

EASTERN REDBUD (TYP.)

10' LANDSCAPING BUFFER

CHEMICAL FEED BUILDING
FFE: 1120.25
AREA: 392 SF

HENDERSON WELL

WATERSTONE WELL

CWA

10' BUILDING SETBACK

SD1

Tr

*LIMITS OF DISTURBANCE
0.92 AC (ON-SITE)
0.14 AC (OFF-SITE)
±1.06 AC (TOTAL)

AREA
2.141 ACRES
PARCEL ID: 08098 001001, 08098 001002, 08098 001003, 08098 001004
CITY OF FLOWERY BRANCH GEORGIA
DEED BOOK 9253, PAGE 463
PLAT BOOK 876, PAGE 1

75' IMPERVIOUS BUFFER

50' LOCAL STREAM BUFFER

25' STREAM BUFFER

30' BUILDING SETBACK

EX. STREAM CENTERLINE

EX. WETLANDS (APPROX.)

EX. WETLANDS (APPROX.)

VIREO DR

DWCB
TOP: 1119.00
IE: 1114.12 18" RCP

DWCB
TOP: 1119.29
IE: 1113.93 18" RCP
IE: 1113.85 18" CMP

SWCB
TOP: 1122.40
IE: 1116.80 18" CMP

18" CMP
IE:1116.56

96" CMP
IE:1107.85

96" CMP
IE:1107.73

96" CMP
IE:1108.39

96" CMP
IE:1108.52

18" RCP
IE:1118.84

18" RCP
IE:1111.93

15" RCP
IE:1118.06

15" RCP
IE:1117.34

18" RCP
IE:1124.92

18" RCP
IE:1123.17

18" RCP
IE:1122.91

15" CMP
IE:1121.22

15" CMP
IE:1121.03

PARCEL ID: 08098A000206
WATER STONE CROSSING COMMUNITY ASSOC INC
DEED BOOK 4312, PAGE 80
PLAT BOOK 816, PAGE 154A

EX. TOWNHOUSE

PARCEL ID: 08098 01009
KOSWIRE INC.
4600 CANTRELL ROAD
FLOWERY BRANCH, GA 30542
26.72 ACRES

PARCEL ID: 08098 A000206
WATER STONE CROSSING COMMUNITY ASSOCIATION
4611 BEACON RIDGE LANE
FLOWERY BRANCH, GA 30542
15.52 ACRES

LANDSCAPING NOTES:

1. THE CONTRACTOR SHALL LOCATE AND VERIFY THE EXISTENCE OF ALL UTILITIES PRIOR TO STARTING WORK.
2. THE CONTRACTOR SHALL SUPPLY ALL PLANT MATERIALS IN QUANTITIES SUFFICIENT TO COMPLETE THE PLANTING SHOWN ON ALL DRAWINGS.
3. ALL MATERIAL SHALL CONFORM TO THE GUIDELINES ESTABLISHED BY THE CURRENT AMERICAN STANDARD FOR NURSERY STOCK, PUBLISHED BY THE AMERICAN ASSOCIATION OF NURSERYMEN.
4. NO PLANT SHALL BE PUT INTO THE GROUND BEFORE ROUGH GRADING HAS BEEN COMPLETED AND APPROVED BY THE ENGINEER.
5. ALL PLANTS SHALL BE BALLED AND WRAPPED OR CONTAINER GROWN AS SPECIFIED. NO CONTAINER GROWN STOCK WILL BE ACCEPTED IF IT IS ROOT BOUND. ALL ROOT WRAPPING MATERIAL MADE OF SYNTHETICS OR PLASTICS SHALL BE REMOVED AT TIME OF PLANTING.
6. WITH CONTAINER GROWN STOCK, THE CONTAINER SHALL BE REMOVED AND THE CONTAINER BALL SHALL BE CUT THROUGH THE SURFACE IN TWO VERTICAL LOCATIONS.
7. ALL PLANTS AND STAKES SHALL BE SET PLUM UNLESS OTHERWISE SPECIFIED.
8. ALL PLANTS SHALL BE WATERED THOROUGHLY TWICE DURING THE FIRST 24-HOUR PERIOD AFTER PLANTING. ALL PLANTS SHALL THEN BE WATERED WEEKLY, IF NECESSARY, DURING THE FIRST GROWING SEASON.
9. THE LANDSCAPE CONTRACTOR SHALL REFER TO THE CONTRACT SPECIFICATIONS FOR ADDITIONAL REQUIREMENTS.
10. THE LANDSCAPE CONTRACTOR SHALL REFER TO THE PLANT LIST FOR SEASONAL REQUIREMENTS RELATED TO THE TIME OF PLANTING.
11. THE LANDSCAPE CONTRACTOR IS RESPONSIBLE FOR FULLY MAINTAINING ALL PLANTINGS INCLUDING BUT NOT LIMITED TO WATERING, SPRAYING, MULCHING, FERTILIZING, ETC. OF PLANTING AREAS & LAWNS UNTIL THE WORK IS ACCEPTED IN FULL BY THE OWNER.
12. ALL PLANTS AND PLANTING AREAS MUST BE COMPLETELY MULCHED AT A MINIMUM DEPTH OF 4" USING A SHREDDED HARDWOOD MULCH.
13. ALL SOIL USED FOR PLANTING SHALL CONSIST OF REGIONALLY APPROPRIATE SOILS.
14. TILL SOIL TO A DEPTH OF 4" MINIMUM.
15. REMOVE ALL ROCKS LARGER THAN 1" MEASURED IN LARGEST DIRECTION.

PLANT SCHEDULE

KEY	QTY	BOTANICAL NAME	COMMON NAME	SIZE	NOTES
SMALL TREES					
AG	6	ILEX OPACA	AMERICAN HOLLY	B&B	6-10' TALL AT INSTALLATION
MC	3	CORNUS FLORIDA	FLOWERING DOGWOOD	B&B	4-8' TALL AT INSTALLATION
MC	3	CERCIS CANADENSIS	EASTERN REDBUD	B&B	6-10' TALL AT INSTALLATION
TOTAL	12				

GRAPHIC SCALE 1" = 20'

GEORGIA811 www.Georgia811.com

ESG ENGINEERING
6400 Peake Rd
Macon, GA 31210
Ph: (478) 474-4996
Fax: (478) 474-5045

GROUNDWATER WELLS #4 & #5

FOR THE
CITY OF FLOWERY BRANCH

REVISIONS

NO.	DESCRIPTION	DATE
1	ESPC SHEETS	11-7-25
2	BID SET OF PLANS	12-1-25
3	REVISED WITH CITY COMMENTS	12-5-25

BID SET

GEORGIA REGISTERED No. PE046341 PROFESSIONAL ENGINEER ANDREW D SWICEGOOD

DRAWN BY: DSC
CHECKED BY: ADS
DATE: OCT 2025
SCALE: SEE SCALE

CONTENT:

LANDSCAPING:
LANDSCAPING PLAN

SHEET NO: 3
L1.0

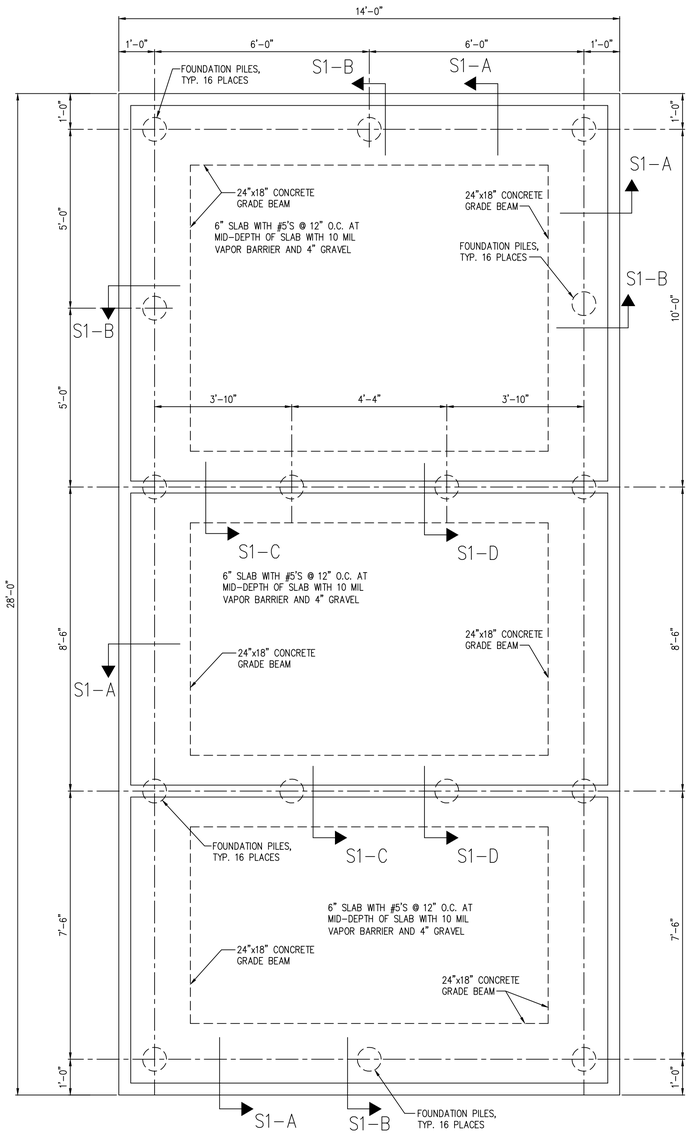

FOUNDATION PLAN

NO SCALE

NOTE: COORDINATE BUILDING ANCHORAGE REQUIREMENTS WITH MANUFACTURER'S DRAWINGS

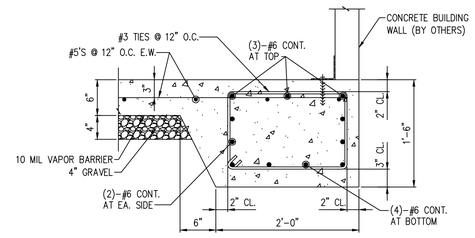

S1-A

NO SCALE

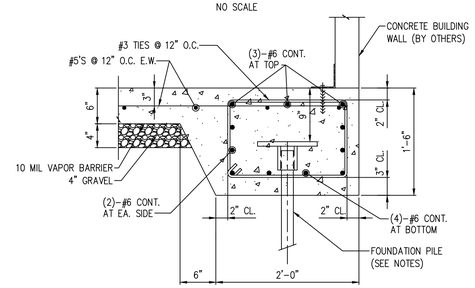

S1-B

NO SCALE

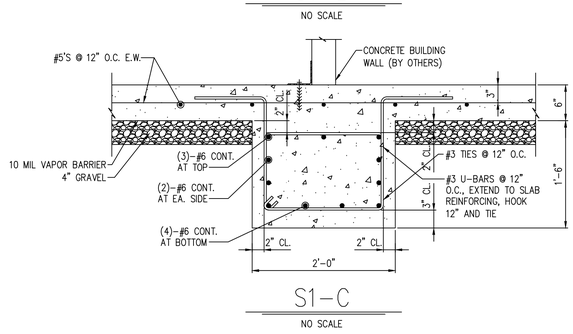

S1-C

NO SCALE

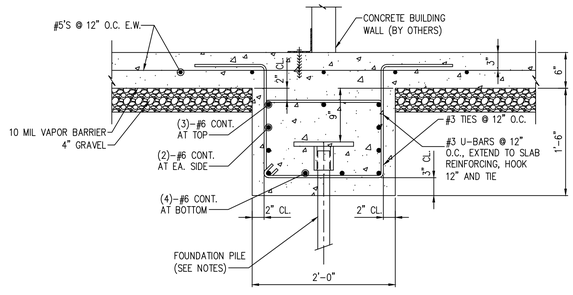

S1-D

NO SCALE

REINFORCED CONCRETE GENERAL NOTES

1. ALL CONCRETE WORK SHALL CONFORM TO ACI 301, "SPECIFICATIONS FOR STRUCTURAL CONCRETE FOR BUILDINGS". DESIGN IS BASED ON ACI 318, "BUILDING CODE REQUIREMENTS FOR STRUCTURAL CONCRETE."
2. CONCRETE SHALL BE NORMAL WEIGHT (150 PCF) AND SHALL DEVELOP A MINIMUM COMPRESSIVE STRENGTH OF 4500 PSI AT 28 DAYS.
3. SUBMIT CONCRETE MIX DESIGNS FOR REVIEW, IN ACCORDANCE WITH ACI 318 TO THE EOR AND TESTING AGENCY.
4. THE PROPOSED MATERIALS AND MIX DESIGN SHALL BE FULLY DOCUMENTED AND REVIEWED. RESPONSIBILITY FOR OBTAINING THE REQUIRED DESIGN STRENGTH IS THE CONTRACTOR'S.
5. USE OF CALCIUM CHLORIDE, CHLORIDE IONS, OR OTHER SALTS IN CONCRETE IS NOT PERMITTED.
6. THE AIR CONTENT AT THE POINT OF PLACEMENT SHALL BE PER ACI 318 TABLE 4.2.1 FOR MODERATE EXPOSURE.
7. THE TESTING AGENCY SHALL SAMPLE AND TEST EACH 100 CU. YARDS OR FRACTION THEREOF OF EACH CLASS OF CONCRETE PLACED EACH DAY. SAMPLE CONCRETE IN ACCORDANCE WITH ASTM C172. PERFORM THE FOLLOWING TESTS IN ACCORDANCE WITH THE INDICATED STANDARD:

   SLUMP: ASTM C143

   AIR CONTENT: ASTM C231 (NORMAL WEIGHT CONCRETE) ASTM C173 (LIGHT WEIGHT CONCRETE)

   COMPRESSIVE STRENGTH: ASTM C39, WITH ONE CYLINDER AT 7 DAYS, 2 CYLINDERS AT 28 DAYS, AND ONE SPECIMEN HELD IN RESERVE.

   CONCRETE TEMPERATURE: ASTM C1064

   UNIT WEIGHT: ASTM C567
8. MOIST CURE CONCRETE WITH MOISTURE PROTECTIVE COVER FOR A MINIMUM OF 7 DAYS. CURING COMPOUNDS PERMITTED IF COMPATIBLE WITH ANY PLANNED FLOOR FINISHES
9. REINFORCING STEEL SHALL CONFORM TO ASTM A615, GRADE 60, UNLESS NOTED OTHERWISE.
10. TIE ALL REINFORCING STEEL AND EMBEDMENTS SECURELY IN PLACE PRIOR TO PLACING CONCRETE. PROVIDE SUFFICIENT SUPPORTS TO MAINTAIN THE POSITION OF REINFORCEMENT WITHIN SPECIFIED TOLERANCES DURING ALL CONSTRUCTION ACTIVITIES. "STICKING" DOWELS INTO WET CONCRETE IS NOT PERMITTED.
11. REINFORCING STEEL SHALL HAVE THE FOLLOWING CONCRETE COVER UNLESS NOTED OTHERWISE:

    CONCRETE CAST AGAINST EARTH (NOT FORMED): 3"

    FORMED CONCRETE EXPOSED TO EARTH OR WEATHER
    #6 BARS THROUGH #12 BARS 2"
    #5 BARS AND SMALLER 2"

    CONCRETE NOT EXPOSED TO EARTH OR WEATHER
    SLABS AND WALLS 1"
12. DO NOT WELD OR TACK WELD REINFORCING STEEL UNLESS APPROVED OR DIRECTED BY THE STRUCTURAL ENGINEER.

SOIL PARAMETERS

1. SOIL PARAMETERS
   A. SHALLOW FOUNDATIONS WERE ASSUMED TO BE INSUFFICIENT TO SUPPORT BUILDING DUE TO POOR SOIL CONDITIONS. DEEP FOUNDATION ELEMENTS ARE REQUIRED TO SUPPORT THE BUILDING.
   B. RECOMMENDATION IS BASED ON THE FOLLOWING SOILS REPORT:
      DRINKING WATER SITE
      GEOTECHNICAL ENGINEERING REPORT
      TERRACON PROJECT NO. HN255025
      DATED APRIL 3, 2025
2. IF SITE CONDITIONS DIFFER FROM THOSE INDICATED, THE DESIGN PROFESSIONAL SHALL BE NOTIFIED IMMEDIATELY.
3. ALL FOUNDATION WORK SHALL BE DONE 'IN THE DRY'.

GENERAL NOTES

1. DESIGN LOADS
   A. BUILDING LOAD ..... 120,000 LBS.
   B. SLAB LIVE LOAD ..... 100 PSF
   C. ROOF LIVE LOAD ..... 20 PSF
2. CODES
   A. INTERNATIONAL BUILDING CODE, 2018 ED. WITH LATEST GEORGIA AMENDMENTS.
   B. REINFORCED CONCRETE: ACI 318-14.
3. FOUNDATION DESIGN ASSUMES ALL INTERIOR WALLS ARE LOAD BEARING AND BUILDING WEIGHT IS UNIFORMLY DISTRIBUTED TO FOUNDATION.
4. SHOP DRAWINGS GENERAL NOTES: THE PLANS, SECTIONS, AND DETAILS PROVIDED AS PART OF THE CONTRACT DOCUMENTS SHALL NOT BE USED IN A REPRODUCIBLE FORM AS PART OF THE SHOP DRAWINGS. ALL FABRICATORS & SUPPLIERS SHALL ANTICIPATE THAT REVISIONS TO SUBMITTALS MAY BE REQUIRED. THIS INCLUDES MODIFICATIONS TO DETAILS THAT ARE CHANGED FOR COORDINATION PURPOSES. NO ADDITIONAL FEES ARE PERMITTED FOR REVISING SUBMITTALS FOR WORK DESCRIBED IN THE CONTRACT DOCUMENTS.
5. CONTRACTOR TO FIELD VERIFY ALL DIMENSIONS AND ELEVATIONS BEFORE BEGINNING CONSTRUCTION.
6. SEE ESG DRAWINGS AND SPECIFICATIONS FOR REQUIREMENTS ON FLOOR AND WALL COATINGS

FOUNDATION PILE NOTES (PER UNIT)

1. IT IS THE INTENT OF THIS CONTRACT REQUIREMENT TO PROVIDE:
   A. VERTICAL FOUNDATION PILES (16 TOTAL) OF SIZE AND DETAIL THAT WILL ACHIEVE NOT LESS THAN 50,000 POUNDS ULTIMATE (25,000 POUNDS WORKING) COMPRESSION CAPACITY, AND 10,000 POUNDS ULTIMATE (5,000 POUNDS WORKING) TENSION CAPACITY, BEFORE FAILURE.
2. INSTALLATION OF PILES IS TO BE PERFORMED BY A PILE CONTRACTOR APPROVED BY THE OWNER.
3. MINIMUM VERTICAL PILE LENGTH SHALL BE 28 FEET REGARDLESS OF FIELD DETERMINED EXCESS CAPABILITY, EXCEPT THAT, IF DURING CONSTRUCTION PROGRESS, IT IS DETERMINED THAT ANY EXCESSIVE CAPACITY ACHIEVED DURING INSTALLATION IS CAUSING DELAYS OR UNDUE HARDSHIP, THE OWNER RESERVES THE RIGHT TO WAIVE THIS REQUIREMENT (BUT NOT BELOW SPECIFIED ULTIMATE CAPACITY) WITH APPROPRIATE CONTRACT AND CONTRACT PRICE CHANGES AGREED UPON BY OWNER AND CONTRACTOR.
4. PILE CONTRACTOR SHALL HAVE ALL REASONABLE ACCESS TO THE SITE, BOTH BEFORE AND AFTER SUCCESSFUL BIDDING, BUT SCHEDULING SHALL BE COORDINATED WITH THE EOR/OWNER. ALL INSURANCE, SAFETY, LEGAL, AND OTHER AGREED UPON REQUIREMENTS SHALL BE MET BY THE PILE CONTRACTOR BEFORE PERFORMING ANY WORK. IT SHALL BE THE RESPONSIBILITY OF THE PILE CONTRACTOR TO REVIEW THE SITE TO THEIR SATISFACTION PRIOR TO BIDDING. NO CONTRACT CHANGES ARE PERMISSIBLE BECAUSE OF LACK OF KNOWLEDGE OF REASONABLY ACCESSIBLE FEATURES ON THE SITE.
5. SOIL TEST REPORTS ARE INCLUDED IN THE BID PACKAGE. ANY INFERENCE DRAWN FROM THE REPORT, EXCEPT WHERE THE REPORT MIGHT BE FOUND ERRONEOUS, SHALL BE THE RESPONSIBILITY OF THE PILE CONTRACTOR.
6. DESIGN OF ALL PILE COMPONENTS TO MEET REQUIREMENTS SHALL BE PERFORMED BY A PROFESSIONAL ENGINEER REGISTERED IN THE STATE OF GEORGIA, EITHER EMPLOYED BY, OR RETAINED BY THE CONTRACTOR, WHO IS QUALIFIED AND EXPERIENCED IN THE EVALUATION OF THE PILE SYSTEM. SIGNED AND SEALED CALCULATIONS SHALL BE PROVIDED TO THE EOR/OWNER FOR REVIEW. CALCULATIONS SHALL INCLUDE AN ANALYSIS OF THE PILE FOR BUCKLING.
7. PILE CONTRACTOR SHALL PROVIDE WITH THEIR BID A RESUME OF JOBS OF SIMILAR DETAIL AND QUANTITY THAT THEY HAVE PERFORMED.
8. WORK SHALL BE PERFORMED IN AN ORDERLY AND WORKMANLIKE FASHION. SCHEDULING SHALL BE MAINTAINED. PILES SHALL BE LOCATED WITHIN APPROXIMATELY 3" OF THEIR SHOWN LOCATION, AND SHALL BE BATTERED AS SHOWN. PILE CONTRACTOR SHALL PROVIDE ALL LABOR AND MATERIALS AS REQUIRED AND SHALL HAVE A FULL-TIME SUPERINTENDENT ON SITE FOR THE DURATION OF CONSTRUCTION. DAILY RECORDS SHALL BE MADE AND MAINTAINED ON SITE. RECORDS SHALL BE MADE AVAILABLE TO EOR UPON REQUEST. RECORDS SHALL INCLUDE PILE DEPTH TORQUE LOG AND ESTIMATED CAPACITY.
9. AT THE END OF EACH WORK DAY, THE AREA AROUND THE FOUNDATION SITE SHALL BE LEFT IN A CONDITION THAT WILL NOT INTERFERE WITH OTHER TRADES OR THAT WILL NOT POSE A DANGER TO OTHERS ON SITE.
10. CONTRACTOR SHALL PROPOSE AN ALTERNATIVE ADDITIVE TEST PILE PROGRAM AT THE BEGINNING OF THE PROJECT. THE PROGRAM SHALL CONFIRM THE PILE DESIGN MEETS THE REQUIRED COMPRESSION AND TENSION CAPACITY. TESTING SHALL BE OBSERVED BY THE OWNER AND/OR THE OWNER'S REPRESENTATIVE.

NO.	DESCRIPTION	DATE	BY
0	ISSUED FOR CONSTRUCTION	12.4.25	MNE

GEORGIA REGISTERED No. PE000062 STRUCTURAL ENGINEER MATTHEW N. ELLIS

12.4.25
Pi-Tech, Inc. COA#PEF003000
COA Expiration: 6.30.2026

DRAWN BY: PEJ
CHECKED BY: MNE
DATE: 12.4.2025
SCALE: AS SHOWN

Pi-Tech
www.pi-techinc.com
PI-TECH, INC.
115 FOREST HILL RD
MACON, GA 31210
478.743.5600

FLOWERY BRANCH CHEM. BUILDING
FOR
ESG ENGINEERING
MACON, GA

SHEET NO. S1
SHEET 1 OF 1

ADDENDUM #2
December 11, 2025

PROJECT: ***Groundwater Wells #4 & #5***

OWNER: City of Flowery Branch

BID DATE: Thursday, December 18, 2025 at 2:00 P.M.

The Bidder is hereby provided the following information:

1. **MISCELLANOUS INFORMATION**

   a. Both the Henderson & Waterstone well pumps shall be equipped with reduced-voltage soft starters. Cost shall be included under the "Groundwater Wells #4 & #5 Improvements Complete" line item in the Bid Form.

   b. Concrete pad for the proposed diesel generator shall be constructed per Electrical Plan sheet E6.1; Subgrade beneath pad shall consist of 12" select fill material compacted to 98% max. dry density, Tensar NX-750 geogrid, and 12" of #57 stone bedding.

   c. Unsuitable soils are present on site – Subgrade beneath proposed structures, pavements, and gravel drive/pad areas will require a minimum of 12" select, compacted import fill material beneath the respective typical section. Contractor shall assume responsibility for undercutting all such areas to the required depth and haul off and dispose of material off-site prior to placing any import fill material. Payment shall be included under the line item in the Bid Form for "Groundwater Wells #4 & #5 Improvements Complete". See Terracon geotechnical report for additional information.

   d. The interface between the covered steel structure foundation/footer and concrete slab/walking area, as well as between the building foundation and concrete walking area shall have continuous bituminous type expansion joints installed conforming to the requirements of ASTM D 994.

   e. Georgia Power will be responsible for bringing power to the site and providing meter. Contractor shall be responsible for setting meter and coordinating electrical service establishment on site – contact Thad Loveless with GA Power at 470-892-0193 (ETLOVELE@southernco.com). All costs associated with such coordination shall be included under the line item in the Bid Form for "Groundwater Wells #4 & #5 Improvements Complete".

2. CONTRACT DOCUMENTS, SECTION 00410 – BID FORM

a. A new Section 00410 – Bid Form has been issued – see attached.

3. TECHNICAL SPECIFICATIONS, SECTION 01020 – ALLOWANCES

a. A new Section 01020 – Allowances has been issued – see attached.

4. TECHNICAL SPECIFICATIONS, ELECTRICAL

a. Specifications for all electrical work to be performed has been issued – see attached.

5. CONSTRUCTION PLANS

a. See attached Construction Plan Sheets:

- Utility Plan C4.0
- Structural plan sheets S1 & S2
- Mechanical plan sheets M0.1, M0.2 & M1.0
- Electrical plan sheets E1.0, E1.1 – E5.1, E6.0 & E6.1
- Plumbing plan sheets P0.1 & P1.0

All bidders shall acknowledge receipt of all addenda issued where indicated on the bid sheets. (Section 00410 – Bid Form, Page 2)

ATTENTION

ALL BIDDERS SHALL ACKNOWLEDGE RECEIPT OF ALL ADDENDA ISSUED WHERE INDICATED ON THE BID SHEETS. (SECTION 00410 – BID FORM, PAGE 2)

BIDDERS ARE MADE AWARE THAT IT IS THEIR RESPONSIBILITY TO VERIFY THAT ANY AND ALL ADDENDA HAVE BEEN RECEIVED PRIOR TO THE SUBMISSION OF THEIR BID. IN THE EVENT ANY BIDDER FAILS TO ACKNOWLEDGE RECEIPT OF ANY SUCH ADDENDA IN THE SPACE PROVIDED ON THE BID FORM, THEIR BID WILL BE CONSIDERED NONRESPONSIVE.

END ADDENDUM

SECTION 00410
BID FORM

PROJECT IDENTIFICATION:

Groundwater Wells #4 & #5

CONTRACT IDENTIFICATION AND NUMBER:

F0002.018

THIS BID IS SUBMITTED TO:

City of Flowery Branch
5410 Pine Street
Flowery Branch, GA 30542

THIS BID IS SUBMITTED FROM:

Bidder: _____

Address: _____

_____

Phone: _____

State of Georgia Business License No.: _____

1. The undersigned Bidder proposes and agrees, if this Bid is accepted, to enter into an agreement with Owner in the form included in the Contract Documents to perform and furnish all Work as specified or indicated in the Contract Documents for the Contract Price and within the Contract Time indicated in this Bid and in accordance with the other terms and conditions of the Contract Documents.

2. Bidder accepts all of the terms and conditions of the Advertisement or Invitation to Bid and Instructions to Bidders, including without limitation those dealing with the disposition of Bid security. This Bid will remain subject to acceptance for 60 days after the day of Bid opening. Bidder will sign and submit the Agreement with the Bonds and other documents required by the Bidding Requirements within fifteen days after the date of Owner's Notice of Award.

3. In submitting this Bid, Bidder represents, as more fully set forth in the Agreement, that:

(a) Bidder has examined copies of all the Bidding Documents and of the following Addenda (receipt of all which is hereby acknowledged):

Date	Addendum Number

(b) Bidder has familiarized itself with the nature and extent of the Contract Documents, Work, site, locality, and all local conditions and Laws and Regulations that in any manner may affect cost, progress, performance or furnishing of the Work.

(c) Bidder has studied carefully all reports and drawings of subsurface conditions and drawings of physical conditions which are identified in the Supplementary Conditions as provided in Paragraph 4.2 of the General Conditions, and accepts the determination set forth in Paragraph 4.2.1 of the Supplementary Conditions of the extent of the technical data contained in such reports and drawings upon which Bidder is entitled to rely.

(d) Bidder has obtained and carefully studied (or assumes responsibility for obtaining and carefully studying) all such examinations, investigations, explorations, tests and studies (in addition to or to supplement those referred to in (c) above) which pertain to the subsurface or physical conditions at the site or otherwise may affect the cost, progress, performance or furnishing of the Work as Bidder considers necessary for the performance or furnishing of the Work at the Contract Price, within the Contract Time and in accordance with the other terms and conditions of the Contract Documents, including specifically the provisions of Paragraph 4.2 of the General Conditions; and no additional examinations, investigations, explorations, tests, reports or similar information or data are or will be required by Bidder for such purposes.

(e) Bidder has reviewed and checked all information and data shown or indicated on the Contract Documents with respect to existing Underground Facilities at or contiguous to the site and assumes responsibility for the accurate location of

said Underground Facilities. No additional examinations, investigations, explorations, tests, reports or similar information or data in respect of said Underground Facilities are or will be required by Bidder in order to perform and furnish the Work at the Contract Price, within the Contract Time and in accordance with the other terms and conditions of the Contract Documents, including specifically the provisions of Paragraph 4.3 of the General Conditions.

(f) Bidder has correlated the results of all such observations, examinations, investigations, explorations, tests, reports and studies with the terms and conditions of the Contract Documents.

Bidder has given Engineer written notice of all conflicts, errors or discrepancies that it has discovered in the Contract Documents and the written resolution thereof by Engineer is acceptable to Bidder.

(g) This Bid is genuine and not made in the interest of or on behalf of any undisclosed person, firm or corporation and is not submitted in conformity with an agreement or rules of any group, association, organization or corporation; Bidder has not directly or indirectly induced or solicited any other corporation to refrain from bidding; and Bidder has not sought by collusion to obtain for itself any advantage over any other Bidder or over Owner.

(h) Bidder agrees to commence work under this Agreement on or before a date to be specified in a written "Notice to Proceed" of the Owner.

(i) Bidder accepts the provisions of the Agreement as to liquidated damages in the event of failure to complete the Work on time.

4. Bidder will complete the Work in accordance with the Contract Documents for the following price(s):

The Contractor is directed to Section 01025 “Measurement and Payment” for the methods and limits for payment to the Contractor for the pay items listed below:

(A) BASE BID: Groundwater Wells #4 & #5

BID FORM BEGINS ON PAGE 4

BID FORM					
ITEM NO	QTY	UNIT	DESCRIPTION	UNIT PRICE	TOTAL PRICE
1	80	CY	Rock Removal - Base	$ 75.00	$ 6,000.00
2	80	CY	Rock Removal - Premium		
3	1	LS	Clearing & Grubbing		
4	1	LS	Demolition		
5	1	LS	Groundwater Wells #4 & #5 Improvements Complete (see Section 01025 for limits and extents of payment under this line item)		
6	1	LS	Diesel Generator Installation		
7	1	EA	3-Way Fire Hydrant Assembly		
8	1	EA	4” Gate Valve w/ Box & Cover		
9	1	EA	8” Gate Valve w/ Box & Cover		
10	50	LF	4" RJ DIP Water Main - Open Cut		
11	70	LF	4" RJ DIP Water Main - Horizontal Directional Drill		
12	1,580	LF	8" RJ DIP Water Main - Open Cut Cross-Country		
13	45	LF	8" RJ DIP Water Main - Open Cut Roads		
14	145	LF	8" DR-11 (DIPS) HDPE Water Main - Horizontal Directional Drill		
15	1	EA	2" Tapping Sleeve & Valve (incl. Valve Box & Cover)		
16	1	EA	6" Tapping Sleeve & Valve (incl. Valve Box & Cover)		
17	1	EA	Cut, Cap, & Abandon Ex. 2" Water Line		
18	5	EA	Longside Water Service Transfer		
19	1	LS	Traffic Control		
20	1	LS	Erosion & Sediment Control Complete		

21	1	LS	Landscaping Complete		
22	1	LS	Groundwater Wells #4 & #5 Rehabilitation Allowance	$ 115,000.00	$ 115,000.00
23	1	LS	Supplemental Work Allowance (SWA)	$ 100,000.00	$ 100,000.00
			TOTAL BASE BID AMOUNT:		

Bidder agrees to furnish all labor, materials, and equipment necessary to construct the **Groundwater Wells #4 & #5** for the City of Flowery Branch for the sum of

_____Dollars

($_____).

6. Bidder agrees that the Work will be substantially complete and ready for final payment in accordance with the completion time/dates provided in the Contract and any Addenda.

7. Bidder accepts the provisions of the Agreement as to liquidated damages in the event of failure to complete the Work within the times specified in the Agreement.

8. The following documents are attached to and made a condition of this Bid:
   a. Required Bid Security in the form of 5% of the Bid Total Price.

9. The undersigned further agrees that in case of failure on his part to execute the said contract and the Bond within fifteen (15) consecutive calendar days after written notice being given of the award of the contract, the check or bid bond accompanying this bid, and the monies payable thereon shall be paid into the funds of the Owner as liquidated damages for such failure, otherwise, the check or bid bond accompanying this proposal shall be returned to the undersigned.

10. Communications concerning this Bid shall be addressed to:
    ESG Engineering, LLC
    6400 Peake Rd
    Macon, GA 31210
    Attn: Rachael Crowell
    rcrowell@esgengineering.com

11. Terms used in this Bid which are defined in the General Conditions or Instructions to Bidders will have the meanings indicated in the General Conditions or Instructions to Bidders.

SUBMITTED on _____, 20____.

BIDDER: _____

BY: _____

TITLE: _____

STATE CONTRACTOR
LICENSE NO. _____

ADDRESS: _____

_____

_____

PHONE: _____

Seal: (if bid by a Corporation)

END OF SECTION

SECTION 01020
ALLOWANCES

PART 1 – GENERAL

A. The Contractor shall include in his bid proposal the allowances stated herein. The final amount of any allowance item listed herein shall be adjusted accordingly by change order to reflect actual cost.

PART 2 – PRODUCTS

A. The Contractor shall allow the sum indicated in the Bid Form for Supplemental Work Allowance (SWA). SWA shall be utilized to incorporate cost changes for any additional authorized work into the scope of work up to the amount in the Bid Form. Contract change orders shall be enforced for contract changes over and above this amount. These SWA's shall authorize the Contractor to perform additions to the work, but the Contractor shall perform no work until written authorization has been delivered to the Contractor by the Owner/Engineer. Contractor should not expect that any SWA's will be issued; SWA's shall be issued at the discretion of the Owner only.

The value of any work covered by a SWA shall be determined in one of the following ways:

1. Where the work involved is covered by unit prices contained in the Contract Documents, by application of unit prices to the quantities of the item involved (subject to the provisions of the General Conditions).

2. By mutual acceptance of a lump sum by Contractor and the Owner.

3. On the basis of the cost of the work plus a Contractor's Fee for overhead and profit. This basis shall be as established for Change Orders in General Conditions.

B. The Contractor shall allow the sum indicated in the Bid Form for Groundwater Wells #4 & #5 Rehabilitation Allowance. The Groundwater Wells #4 & #5 Rehabilitation Allowance shall be utilized to engage the services of a hydrogeologist to provide testing oversight/inspection and to prepare and submit final water quality/pump test report for each well; allowance shall also be used to engage a laboratory and sub-contractor(s) in conjunction with the selected hydrogeologist to provide sediment removal, air burst cleaning, post-cleaning CCTV, disinfection, 72-hr pump test, data measurements/reporting/record keeping, water quality laboratory

testing, and all associated and ancillary work required per Spec. Section 80001. Should the Contractor require any overhead or profit for allowing such a sum within their bid, that amount should be added into the line item of their choosing. Any additional cost associated with coordinating the work shall be included under the line item of the Contractor's choosing.

PART 3 – EXECUTION

A. Amounts stated shall include all taxes, coordination and handling that may be required to provide the equipment to the owner. Owner may choose to delay the purchase of equipment to the end of the Contract.

END OF SECTION

SECTION 260000
GENERAL

1.01 CONTRACT DOCUMENTS:

A. All work of Section 26 shall comply with the requirements of:

1. General Conditions
2. Supplementary General Conditions
3. General Requirements
4. Specifications
5. Drawings
6. Modifications incorporated in the documents before their execution.

1.02 WORK INCLUDED

A. This Division of the specifications (26 00 00) covers the complete interior and exterior electrical system for all work shown on the drawings as specified herein providing all material, labor and equipment required for the installation of the electrical systems complete and in operating condition.

B. Include in the electrical work all the necessary supervision and the issuing of all coordinating information to any other trades who are supplying work to accommodate the electrical installations.

1.03 DRAWINGS

A. The drawings for electrical work utilize symbols and schematic diagrams which have no dimensional significance. The work shall therefore, be installed to fulfill the diagrammatic intent expressed on the electrical drawings.

B. Review architectural drawings for door swings, cabinets, counters, moldings and built-in equipment, conditions indicated on architectural drawings shall govern. Prior to rough-in of receptacles and systems outlets, refer to architectural casework drawings for rough-in coordination.

C. Coordinate electrical work with the architectural details, floor plans, elevations, structural and mechanical drawings. Provide fittings, junction boxes and accessories to meet conditions.

D. Do not scale drawings. Dimensions for layout of equipment, or spaces shall be obtained from architectural, structural or mechanical drawings unless specifically indicated on the electrical drawings.

E. Discrepancies shown on different drawings, between drawings and specifications or between drawings and field conditions shall be promptly brought to the attention of the Engineer.

F. Provide as used on the drawings and in the specifications shall mean, furnish, install, connect, adjust and test.

G. The drawings and specifications are complimentary and any work or material shown in one and omitted in the other, or described in the one and not shown in the other, or which may be implied by both or either, shall be furnished as though shown on both, in order to give a complete and first class installation.

1.04 SITE INVESTIGATION

A. Potential Contractors shall visit the project site prior to bid date to satisfy themselves as to the existing conditions and distances which may effect the cost of the project. Where work under this project requires extension, relocation, re-connecting or modifications to existing equipment or systems, the existing equipment or systems, shall be restored to their original condition, with the exception of the work under this contract, before the completion of this project.

1.05 SHOP DRAWINGS

A. Submit for approval by the Engineer all materials and equipment to be incorporated in the electrical work.

B. Submit only shop drawings which comply with the contract documents. Shop drawings shall be checked and corrected by the Contractor before they are submitted to the Engineer. Shop drawings that are not corrected by the Contractor shall be returned for correction without detailed notations by the Engineer as to the necessary corrections.

C. Mark each individual submittal item to show specification section which pertains to the item.

D. Submit information as required under SUBMITTALS, for each of the individual electrical sections of the specifications.

E. Data submitted shall contain all information required to indicate compliance with equipment specified.

F. Submit field information drawings to explain fully all procedures involved in erecting, mounting and connecting all items of equipment which differ from that specified.

G. When Shop Drawings are reviewed, some errors may be detected but others may be overlooked. This does not grant the Contractor permission to proceed in error. Regardless of any information contained in the Shop Drawings, the requirements of the Drawings and Specifications shall be followed and are not waived or superseded in any way by the Shop Drawing review.

1.06 RECORD DRAWINGS:

A. One complete set of electrical drawings shall be reserved for as-built drawings. Any approved deviation from the contract drawings shall be recorded on these drawings. Drawings shall be checked monthly for completeness.

B. Completed as-built drawings shall be presented to the Engineer prior to final inspection.

1.07 MAINTENANCE AND OPERATING INSTRUCTIONS:

A. Provide at the time of final inspection three sets of maintenance and operating instruction for:

1. Lighting and Power Panelboards
2. Fuses
3. Wiring Devices
4. Lighting Fixtures
5. Disconnect Switches
6. Generator/ATS

7. Surge Protection System
8. Dry-type Transformers

B. Furnish a qualified and accredited factory trained technician to train personnel designated by the Owner in the proper operation and maintenance of specialized equipment.

C. The issuing of operating instructions shall include the submission of the name, address, and telephone number of the manufacturer's representative and service company for each item of equipment so that service and spare parts can be readily obtained.

1.08 CODES AND PERMITS:

A. All electrical work shall meet or exceed the latest requirements of the following codes and/or other authorities exercising jurisdiction over the electrical construction work and the project.

1. The National Electrical Code (NFPA 70) - 2023 Edition
2. The National Electrical Safety Code (ANSI C-2)
3. The Life Safety Code (NFPA 101) - Current Edition
4. The International Building Code - Current Edition, with Georgia Amendments.
5. Regulations of the local utility company with respect to metering and service entrance.
6. Municipal and State ordinances governing electrical work.

B. All required permits and inspection certificates shall be obtained, and made available at the completion of the work. Permits, inspections, and certification fees shall be paid for as a part of the electrical work.

1.09 DEVIATIONS:

A. No deviations from the plans and specifications shall be made without the full knowledge and consent of the Engineer or his authorized representative.

B. Should the Contractor find at any time during progress of the work that, in his judgment, existing conditions make desirable a modification in requirements covering any particular item or items, he shall report such items promptly to the Engineer for his decision and instruction.

1.10 COOPERATION:

A. This Contractor shall schedule his work and in every way possible cooperate with all other Contractors on the job to avoid delays, interferences, and unnecessary work. He shall notify them of all openings, hangers, excavations, etc., so that proper provisions shall be made for his work. This shall not relieve him of the cost of cutting, when such is required.

B. This Contractor shall do all cutting and excavating necessary for the complete installation of his work, but he shall not cut the work of any other Contractor without first consulting the Engineer. He shall repair any work damaged by him or his workmen, employing the services of the Contractor whose work is damaged. Saw cut existing slab as required for routing conduits and floor boxes noted to be installed in existing floors. Restore to original finish.

C. This Contractor shall by all means coordinate the location of ceiling lighting fixtures, both recessed and surface mounted, with the Ceiling Contractor so that proper hangers and supports shall be provided.

D. Any conflict between electrical and other trades shall be reported before construction starts. No extra charges will be approved for work resulting from failure to coordinate with other trades.

1.11 INSTALLATION:

A. Raceways, fixtures, devices, and other electrical equipment shall be installed in a neat and workmanlike manner and in accordance with recognized good practice for a first class installation.

B. The Engineer or his representative shall have the authority to reject any workmanship not complying with the contract documents.

C. The Electrical Contractor shall personally or through an authorized licensed and competent electrician, constantly supervise the work from beginning to complete and final inspection.

D. Electrical equipment shall be installed in accordance with manufacturer's recommendations.

E. Locations of proposed raceway, riser, location of structural elements, location and size of chases method and type of construction of floors, walls, partitions, etc., shall be verified before construction starts.

F. Consult owner and utility companies for underground lines before any underground work is started. Contractors shall be responsible for any damage.

G. All empty conduits shall have a pull string installed. All flush recessed boxes shall have black plates installed.

1.12 EXCAVATION, TRENCHING AND BACKFILLING:

A. General. The Contractor shall perform all excavation to install conduit structures and equipment specified in this Division of the Specifications. During excavation, materials for backfilling shall be piled back from the banks of the trench to avoid over-loading and to prevent slides and cave-ins. All excavated materials not to be used for backfill shall be removed and disposed of by the Contractor. Grading shall be done to prevent surface water from flowing into trenches and other excavations and water accumulating therein shall be removed by pumping. All excavations shall be made by open cut. No tunneling shall be done. All requirements of OSHA shall be complied with.

B. Trench Excavation. The bottom of the trenches shall be graded to provide uniform bearing and support for each section of the conduit on undisturbed soil at every point along its entire length. Over depths shall be backfilled with loose, granular, moist earth, tamped. Removed unstable soil that is not capable of supporting the conduit and replace with specified material.

C. Backfilling. The trenches shall not be backfilled until it is reviewed by the Engineer or his representative. The trenches shall be backfilled with the excavated materials approved for backfilling, consisting of earth, loam, sandy clay, and gravel or soft shale, free from large clods of earth or stones, deposited in 6" layers and tamped until the conduit has a cover of not less than the adjacent existing ground but not greater than 2" above existing ground. The backfilling shall be carried on simultaneously on both sides of the trench so that conduit is not displaced. The compaction of the filled trench shall be at least equal to that of the

surrounding undisturbed material, except that trenches occurring under paved areas or in areas to be filled shall be backfilled in 6" maximum layers and each layer compacted to 95% maximum density. Settling the backfill with water will not be permitted. Any trenches not meeting compaction requirements or where settlement occurs shall have backfill removed down to the top of the conduit then backfill with approved materials as specified hereinbefore.

D. Positively no tree roots are to be damaged, hand dig where required. Damaged trees or shrubbery shall be replaced in kind and must be approved by Engineer.

1.13 MATERIALS:

A. Materials specified by manufacturer's name shall be used unless approval of other manufacturers are listed in addenda to these specifications. Request for prior approval shall be submitted by mail only. Facsimile will not be acceptable.

B. Drawings indicating proposed layout of space, all equipment to be installed therein and clearance between equipment shall be submitted, where substitution of materials alter space requirements on the drawings.

C. Material Standards: All materials shall be new and shall conform to the standards where such have been established for the particular material in question. Publications and Standards of the organization listed below are applicable to materials specified herein.

1. American Society for Testing and Materials (ASTM)
2. Underwriter's Laboratories, Inc. (UL)
3. National Electrical Manufacturer Association (NEMA)
4. Insulated Cable Engineers Association (ICEA)
5. Institute of Electrical and Electronic Engineers (IEEE)
6. National Fire Protection Association (NFPA)
7. American National Standards Institute (ANSI)

D. Material of the same type shall be the product of one manufacturer.

E. Materials not readily available from local sources shall be ordered immediately upon approval.

F. The Engineer shall have authority to reject any materials, or equipment, not complying with these specifications and have the Contractor replace materials so rejected immediately upon notification of rejection.

G. Any material or equipment so rejected shall be removed from the job within 24 hours of such rejection, otherwise the Engineer may have same removed at the Contractor's expense.

1.14 EQUIPMENT CONNECTIONS:

A. All equipment requiring electrical power connections shall be connected under this Division of these specifications.

B. Where electrical connections to equipment require specific locations, such locations shall be obtained from shop drawings.

C. Drawings for location of conduit stub-up boxes mounted in wall or floor to serve specific equipment, shall not be scaled.

D. Electrical circuits to equipment furnished under other sections of these specifications are based on design loads. If actual equipment furnished has loads other than design loads electrical circuits and protective devices shall be revised to be compatible with equipment furnished at no additional cost to the Owner. Any revisions must have prior approval by the Engineer. **Before submitting shop drawings, Electrical Sub-Contractor shall along with the Plant Equipment providers/contractors, Mechanical and Plumbing Sub-Contractor review voltage and load requirements for mechanical and plumbing equipment to determine the compatibility between what is being furnished and what is shown in the contract drawings. The Electrical Sub-Contractor shall along with his submittals submit a statement that he has reviewed all shop drawings including review with the Plant Equipment providers/contractors, Mechanical and Plumbing Sub-Contractor**.

E. Where equipment is indicated to be served thru conduit stub-up, conduit shall be stubbed up not less than four inches above floor where transition shall be made to sealtite flexible conduit for connection to equipment.

F. The Contractor's attention is invited to other Divisions of these specifications, where equipment requiring electrical service or electrically related work is specified to become fully aware of the scope of work required for electrical service or related work.

G. Where electricity utilizing equipment is supplied separate from the electrical work, and is energized, controlled or otherwise made operative by electrical work, the testing to provide the proper functional performance of such wiring systems shall be conducted by the trade responsible for the equipment. The electrical work shall, however, include cooperation in such testing and the making available of any necessary testing or adjustments to the electrical equipment.

H. Heating, air conditioning, and ventilating equipment is specified to be furnished and installed under other sections of these specifications. The controls, likewise are specified to be furnished thereunder. All necessary wiring, wiring troughs and circuit breakers for power for this equipment shall be furnished and installed under this section of the specifications, in accordance with the plans and/or diagrams furnished with the equipment, or shown on these plans. Starters furnished by the Mechanical Contractor shall be installed under this Division of the specifications. Power wiring to auxiliary equipment on a piece of equipment remote from its main terminal box and interlocking of apparatus shall be accomplished under Heating Ventilating Equipment section of the specifications. Conduit and outlets for control wiring shall be furnished and installed under Mechanical Division of these specifications. Control conductors for mechanical equipment shall not be installed in same conduit with power conductors.

I. Contractor is to note that location of disconnect switches shown are schematic in nature. Exact location of disconnect switch and mounting height shall be coordinated with field conditions and equipment shop drawings. Locate disconnect as required to maintain clearances required by National Electrical Code.

J. Contractor shall provide a rooftop mounted, GFCI receptacle with weatherproof cover within 20' of a rooftop mounted HVAC unit. Serve from closest receptacle circuit with ½"C., 3#12's. See mechanical plan for unit locations.

1.15 PRODUCT DELIVERY, STORAGE, HANDLING, & PROTECTION

A. Inspect materials upon arrival at Project and verify conformance to Contract Documents. Prevent unloading of unsatisfactory material.

Handle materials in accordance with manufacturer's applicable standards and suppliers recommendations, and in a manner to prevent damage to materials. Store packaged materials in original undamaged condition with manufacturer's labels and seals intact. Containers which are broken, opened, damaged, or watermarked are unacceptable and shall be removed from the premises.

B. All material, except items specifically designed to be installed outdoors such as pad mounted transformers or stand-by generators, shall be stored in an enclosed, dry building or trailer. Areas for general storage shall be provided by the Contractor. Provide temperature and/or humidity control where applicable. No material for interior installation, including conductors, shall be stored other than in an enclosed weather tight structure. Equipment stored other than as specified above shall be removed from the premises.

C. Equipment and materials shall not be installed until such time as the environmental conditions of the job site are suitable to protect the equipment or materials. Conditions shall be those for which the equipment or materials are designed to be installed. Equipment and materials shall be protected from water, direct sunlight, cold or heat. Equipment or materials damaged or which are subjected to these elements are unacceptable and shall be removed from the premises and replaced.

1.16 CLEANING AND PAINTING

A. Remove oil, dirt, grease and foreign materials from all raceways, fittings, boxes, panelboard trims and cabinets to provide a clean surface for painting. Touch-up scratched or marred surfaces of lighting fixtures, panelboard and cabinet trims, motor control center, switchboard or equipment enclosures with paint furnished by the equipment manufacturers specifically for that purpose.

B. Do not paint trim covers for flush mounted panelboards, telephone cabinets, pull boxes, junction boxes and control cabinet unless required by the Engineer. Remove trim covers before painting. Under no conditions shall locks, latches or exposed trim clamps be painted.

C. Unless indicated on the drawings or specified herein to the contrary, all painting shall be done under the PAINTING Section of these Specifications.

D. Where plywood backboards are used to mount equipment provided under Division 26, paint backboards with two coats of light grey semi-gloss paint. Plywood shall be 3/4" fire rated plywood. Paint shall be fire retardant paint.

1.17 GUARANTEE:

A. All systems and component parts shall be guaranteed for one year from the date of final acceptance of the complete project. Defects found during this guaranteed period shall be promptly corrected at no additional cost to the Owner.

1.18 SERVICE:

A. The electrical service and telephone service for this project has been coordinated between the Engineer and the Utility Company. However, before installing service conduit (underground or mast), Contractor shall contact Utility Company and verify voltage, location and type of service. Prior to rough-in, coordinate an on-site meeting with each Utility Company to review exact requirements. Submit letter of coordination to Engineer for review.

END OF SECTION

SECTION 260003
ELECTRICAL SUBMITTAL PROCEDURES

PART 1 - GENERAL

1.1 SUMMARY

A. Section includes requirements for the preparation of Electrical Division 26 Shop Drawings, Product Data, Samples, and other submittals.

PART 2 - PRODUCTS

2.1 SUBMITTAL PROCEDURES

A. General Submittal Procedure Requirements: Prepare and submit submittals required by individual Specification Sections. Types of submittals are indicated in individual Specification Sections.

B. All submittals shall be submitted in electronic format.

C. Electronic Submittals: Identify and incorporate information in each electronic submittal file as follows:

1. Assemble complete submittal package into indexed files incorporating submittal requirements of each single Specification Section and transmittal form with links enabling navigation to each item.
2. Name file with submittal number or other unique identifier, including revision identifier.

    a. File name shall use project identifier and Specification Section number followed by a decimal point and then a sequential number (e.g., LNHS-061000.01). Resubmittals shall include an alphabetic suffix after another decimal point (e.g., LNHS-061000.01.A).

3. Transmittal Form for Electronic Submittals: Use software-generated form from electronic project management software acceptable to Owner, containing the following information for EACH SECTION:

    a. Project name.
    b. Date.

c. Name and address of Engineer.
d. Name of Construction Manager/General Contractor.
e. Name of Electrical Contractor.
f. Name of firm or entity that prepared submittal.
g. Names of subcontractor, manufacturer, and supplier.
h. Specification Section number and title.
i. Indication of full or partial submittal.

D. Options: Identify options requiring selection by Engineer.

E. Deviations and Additional Information: On an attached separate sheet, prepared on Contractor's letterhead, record relevant information, requests for data, revisions other than those requested by Engineer on previous submittals, and deviations from requirements in the Contract Documents, including minor variations and limitations. Include same identification information as related submittal.

F. Resubmittals: Make resubmittals in same form and number of copies as initial submittal.

1. Note date and content of previous submittal.
2. Note date and content of revision in label or title block and clearly indicate extent of revision.
3. Resubmit submittals until they are marked with approval notation from Engineer's action stamp.

G. HVAC/Plumbing/Plant Equipment/Electrical Equipment connection coordination letter as noted below: Before submitting shop drawings, Electrical Sub-Contractor shall along with the Mechanical and Plumbing Sub-Contractor review unit locations, unit quantities, unit voltage, phase, MCA and MOCP requirements for mechanical and plumbing equipment to determine the compatibility between what the Mechanical and Plumbing Sub-Contractor is providing and installing versus what is shown in the contract drawings. The Electrical Sub-Contractor shall along with his gear submittals submit a statement that he has reviewed all equipment shop drawings with the Mechanical and Plumbing Sub-Contractors. Any discrepancy between such shall be listed for Engineer review and corrective action. Do not submit the electrical gear without this coordination letter. Contractor is to note that electrical gear submitted without this coordination letter shall not be reviewed, nor returned until Engineer receives such coordination letter.

2.2 SUBMITTAL DATA

A. Product Data: Collect information into a single submittal for each element of construction and type of product or equipment.
   1. Mark each copy of each submittal to show which products and options are applicable.
   2. Include the following information, as applicable:

      a. Manufacturer's catalog cuts.
      b. Manufacturer's product specifications.
      c. Standard color charts.
      d. Statement of compliance with specified referenced standards.
      e. Testing by recognized testing agency.
      f. Application of testing agency labels and seals.
      g. Notation of coordination requirements.
      h. Availability and delivery time information.

   3. For equipment, include the following in addition to the above, as applicable:

      a. Wiring diagrams showing factory-installed wiring.
      b. Printed performance curves.
      c. Operational range diagrams.
      d. Clearances required to other construction, if not indicated on accompanying Shop Drawings.

   4. Submit Product Data before or concurrent with Samples.

B. Shop Drawings: Prepare Project-specific information, drawn accurately to scale. Do not base Shop Drawings on reproductions of the Contract Documents or standard printed data.

   1. Preparation: Fully illustrate requirements in the Contract Documents. Include the following information, as applicable:

      a. Identification of products.
      b. Schedules.
      c. Compliance with specified standards.
      d. Notation of coordination requirements.
      e. Notation of dimensions established by field measurement.
      f. Relationship and attachment to adjoining construction clearly indicated.
      g. Seal and signature of professional engineer if specified.

2. Sheet Size: Except for templates, patterns, and similar full-size drawings, submit Shop Drawings on sheets at least 8-1/2 by 11 inches, but no larger than 30 by 42 inches.

C. Qualification Data: Prepare written information that demonstrates capabilities and experience of firm or person. Include lists of completed projects with project names and addresses, contact information of engineers and owners, and other information specified.

D. Installer Certificates: Submit written statements on manufacturer's letterhead certifying that Installer complies with requirements in the Contract Documents and, where required, is authorized by manufacturer for this specific Project.

PART 3 - EXECUTION

3.1 CONTRACTOR'S REVIEW

A. Review each submittal and check for coordination with other Work of the Contract and for compliance with the Contract Documents. Note corrections and field dimensions. Mark with approval stamp before submitting to Engineer.

B. Approval Stamp: Stamp each submittal with a uniform, approval stamp. Include Project name and location, submittal number, Specification Section title and number, name of reviewer, date of Contractor's approval, and statement certifying that submittal has been reviewed, checked, and approved for compliance with the Contract Documents.

3.2 ENGINEER’S ACTION

A. Submittals: Engineer will review each submittal, make marks to indicate corrections or revisions required, and return it.

B. Incomplete submittals are unacceptable, will be considered nonresponsive, and will be returned for resubmittal without review.

C. Submittals not required by the Contract Documents may be returned by the Engineer without action.

END OF SECTION

SECTION 260010
LIGHTING AND POWER PANELBOARDS

1.01 SUBMITTALS

A. Complete panelboard shop drawings shall be submitted, listing as a minimum the following items:

1. Voltage rating.
2. Bus assembly rating.
3. Main breaker rating by capacity, number of poles and interrupting rating in RMS symmetrical amperes.
4. Surface or flush mounting.
5. Listing of branch breakers by capacity number of poles and interrupting rating in RMS symmetrical amperes.
6. Top or bottom feed.
7. A schedule similar to that shown on the drawings, depicting branch breaker arrangement and breaker sizes and giving full explanation for any difference between the two.
8. Coordinate lug sizes as required for feeders shown on drawings.

B. Contractor shall submit ¼" layouts of all electrical rooms delineating placement of equipment of minimum required clearances specified in National Electrical Code.

1.02 MANUFACTURERS

A. For the purpose of selecting quality and types of panels, equipment as manufactured by Square "D" Company has been specified. Following manufacturers meeting these specifications are acceptable.

1. G. E.
2. Siemens
3. Eaton
4. Square D

1.03 EQUIPMENT

A. Furnish and install circuit breaker lighting and power panelboards as indicated in the panelboard schedule and where shown on the plans. Panelboards shall be of the dead-front safety type, equipped with

thermal magnetic molded case circuit breakers with frame and trip rating as shown in the schedule.

B. Circuit breakers shall be HACR rated, quick-make, quick-break, thermal-magnetic, trip-indicating, and have common trip on all multi-pole breakers. Trip indication shall be clearly shown by the breaker handle taking position between ON and OFF, when the breaker is tripped. Branch circuit breakers feeding convenience outlets shall have sensitive instantaneous trip setting of not more than 10 times the trip rating of the breakers. Connection to bus in all panels shall be bolted. All breakers shall be 20 ampere trip, unless otherwise shown. All breakers shall be minimum for 120/240 volts (10,000) A.I.C. sym. unless otherwise noted.

C. Bus bar connections to the branch circuit breakers shall be the distributed phase type. Three-phase, four-wire bussing shall be such that any three adjacent single-pole breakers are individually connected to each of the three different phases in such a manner that two or three-pole breakers can be installed at any location. **All current-carrying parts of the bus assembly shall be copper. Main ratings shall be as shown in the panelboard schedule on the drawings.**

D. Panel front shall be provided with a continuous piano hinge on one side.

E. A steel circuit directory frame permanently attached (spot welded) at factory (not glued), and card with a clear plastic covering shall be provided on the inside of the door. The directory card shall provide a space at least 1/4" high x 3" long for each circuit.

F. All panels shall be equipped with a copper equipment grounding bar. The bar shall have lugs of sufficient size to handle all grounding conductors.

G. Sub-feed circuit breakers are not permitted in panels unless specifically called for.

H. Provide mounting hardware for all spaces shown on panelboard schedule.

I. Panelboard circuit numbering shall be such that starting at the top, odd numbering shall be used in sequence down the left hand side and even numbers down the right hand side.

J. Except where otherwise indicated on the drawings or required to avoid conflicts, mount the panelboards so the tops of the cabinets will be 6 feet above the finished floors. For panelboards which are too high, mount them so the bottoms of the cabinets will be not less than 6 inches above the finished floors.

K. Locate the cabinets so that present and future conduits can be connected to them conveniently. Coordinate the dimensions of the cabinets with the dimensions of the spaces designated for installation prior to fabrication of the cabinets. Cabinet shall be minimum 20" wide.

L. Wiring in panelboards shall be neatly grouped and secured with ty-wraps.

M. Electrical panels shall not be used as wireways or junction boxes for control conductors.

N. Where spaces are called for in a panel, all mounting hardware shall be provided for the frame size indicated.

O. Splices in panelboards are not permitted.

END OF SECTION

SECTION 260015
FUSES

1.01 SUBMITTALS

A. Shop drawings shall be submitted and shall consist of manufacturer's published literature and technical data sufficient for the engineer to determine whether system function will be adversely affected, whether proposed fuses meet this specification, and whether they are equal in quality.

1.02 MANUFACTURERS

A. Acceptable manufacturers are:
   1. Littelfuse
   2. Cefco
   3. Gould - Shawmut

1.03 EQUIPMENT/MATERIAL

A. All fuses rated 600 volts or less and used for main, feeder, or branch circuit protection with 200,000 ampere interrupting rating and shall be so labeled. Fuse classes and sizes indicated on the drawings have been selected to provide a fully coordinated selective protection system. To maintain this design, all fuses provided shall be furnished by the same manufacturer. Should equipment provided require a different U.L. Class or fuse size, the engineer shall be furnished with sufficient data to ascertain that system function will not be adversely affected.

B. <u>Current-Limiting Fuses 600 Amperes or Less</u>
All fuses 600 amperes and below shall be true dual-element time delay fuses with separate spring-loaded thermal overload elements in all ampere ratings. All ampere ratings shall be designed to open at 400 degrees Fahrenheit or less when subjected to a non-load oven test. To eliminate induction heating, all fuse ferrules and end caps shall be non-ferrous and shall be bronze or another alloy not subject to stress cracking.

C. Spare Fuses

At the time of final acceptance, the contractor shall furnish the owner's representative, not less than three (3) spare fuses of each size and type installed.

END OF SECTION

SECTION 260020
RACEWAYS

1.01 SUBMITTALS

A. Submit manufacturer's literature for each type of conduit or tubing and fittings used in the project.

1.02 MANUFACTURERS

A. Acceptable manufacturers of rigid steel and electrical metallic tubing conduit are:
   1. Allied Tube and Conduit Co. (Kwik-Fit)
   2. Wheatland Tube Co.
   3. Triangle
   4. L.T.V.
   5. American Brass
   6. E.T.P.
   7. Robroy
   8. PYTCO
   9. RYMCO
   10. Galvite
   11. Western Tube

B. Acceptable manufacturer's of polyvinyl chloride (PVC) conduit are:
   1. Certainteed
   2. Georgia Pipe
   3. Carlon
   4. Can-Tex
   5. Queen City

C. Acceptable manufacturer’s of conduit fittings, bushings, and locknuts are:
   1. O-Z/Gedney
   2. Thomas and Belts
   3. Raco

1.03 MATERIALS

A. All metallic conduit and electric metallic tubing shall be steel, of standard pipe dimensions, smooth inside and out, and shall be galvanized, unless located in a highly corrosive area. Where the word "conduit" is used

hereinafter it shall mean either rigid steel conduit, electric metallic tubing, flexible steel conduit, liquid tight flexible steel conduit or schedule 40 plastic conduit. Intermediate grade conduit is not acceptable.

B. Stainless steel conduits shall be used in highly corrosive areas where the conduit is subject to damage.

B. Galvanized rigid steel conduit shall be used in all areas where it will be exposed to physical damage, unless located in a highly corrosive area. Schedule 40 plastic conduit shall be used underground and in slab-on-grade. In no case shall plastic conduit be exposed; switch to rigid steel conduit when turning up exposed. All other conduit, unless otherwise specified or called for on the plans, may be galvanized electric metallic tubing. Any exposed conduit on exterior of the building shall be galvanized rigid steel only, unless located in a highly corrosive area.

C. Plastic conduit shall be made from virgin polyvinyl chloride C-300 compound. Conduit and fittings shall carry a UL label. Fitting and cement shall be produced by the same manufacturer as the conduit to assure system integrity.

D. All conduit shall be concealed in building construction except as noted or shown otherwise. In areas with no finished ceiling and where conduit is run exposed all runs down to switches, receptacles, etc. shall when possible be concealed in wall. It is the intent of these specifications that all conduit will be concealed whenever possible.

E. EMT fittings shall be compression and made of steel for sizes two inches or smaller, steel set screw type fittings may be used on sizes 2 1/2" or larger. Connectors and couplings shall be rain tight and shall have a nylon insulated throat. All fittings shall be "UL" approved. EMT conduit (in sizes 2 ½” through 4”) provided with integral steel compression or set screw coupling on one (1) end of the conduit is acceptable. Die cast, and indenter type fittings are not acceptable. Fittings for flexible steel conduits and liquid tight flexible conduit shall be steel and have nylon insulated throat.

F. Rigid steel conduit, stainless steel conduit, and EMT shall be not less than ½ inch trade size, schedule 40 plastic conduit shall not be less than 3/4" trade size and not less than required by the NEC or indicated. Conduit runs with more than 5 #12 conductors shall not be less than 3/4".

G. Conduit and EMT systems indicated on the drawings for communication and signaling systems are for typical systems. Install conduit and EMT systems for the system being installed.

H. Connect individual recessed lighting fixtures to the conduit or EMT system with "maximum 6'-0" flexible, galvanized steel conduit. Use flexible galvanized, steel metal conduit for final connection to all rotating equipment and transformers. The flexible conduits shall be long enough to permit the full range of required movements without strain and to prevent the transmission of vibration. Do not utilize flexible conduit to loop between fixtures and devices.

I. Galvanized rigid steel conduit couplings and connections:
   1. Install standard, conduit-threaded fittings.
   2. Ream the ends of conduits after cutting and threading them.
   3. For connection to sheet metal boxes, cabinets and other sheet metal enclosures, install locknuts on the inside and outside of the enclosure for each connection. See Section 16110 of these specifications.

J. EMT couplings and connectors:
   1. Ream the ends of EMT after cutting them.
   2. Install the following threadless type fittings:

      a. Connectors: steel compression type with insulated throat or steel tap-on type with insulated throat.
      b. Couplings: steel compression or tap-on type.

K. Installation of plastic conduit:
   1. Shall be installed in complete accordance with manufacturer's recommendations.
   2. Shall be a minimum of 2'-0" below finished grade when not covered by concrete.
   3. Shall have properly sized bond wire installed with all circuits.
   4. Bends and turns shall be kept to a bare minimum.
   5. Extreme care shall be taken to avoid crushing or cracking conduit. "DO NOT" run vehicles over exposed conduit under any conditions.
   6. All conduit and fittings shall be solvent welded.
   7. Plastic conduit maybe turned up in masonry walls only. PVC conduit shall be allowed to be routed concealed in masonry walls to a maximum height of 48" A.F.F.

8. Do not install conduit in slab. All conduit shall be installed a minimum of 6" below slab. Conduits shall not be bunched together. Maintain 1" clearance between conduits.
9. Plastic conduit shall not be bent with a propane torch or open flame. Contractor shall utilize a heat gun, heat blanket, or hot box. Plastic conduit bent with such shall not be scorched or marred.

L. Insulated bushings:
1. Install nylon insulated bushings on the end of all rigid conduit.
2. The insulating material shall be designed for rugged, long service.
3. Bushings which consist of only insulating material will not be accepted.
4. Fittings which incorporate insulated bushings will be considered for approval in lieu of fittings with separate bushings.

M. All couplings and connections in location where water or other liquid or vapor might contact the conduit and EMT shall also be watertight.

N. Close empty conduit and EMT as complete runs before pulling in the cables and wires.

O. Install exposed conduit and EMT parallel to or at right angles with the lines of the building. Locate them so they will not obstruct headroom or walkways or cause tripping.

P. Avoid bends or offsets where practicable:
1. Do not install more bends, offsets or equivalent in any conduit or EMT run than permitted by the NEC.
2. Make bends with standard conduit bending machines.
3. Conduit hickeys may be used for making slight offsets and for straightening conduits stubbed out of concrete.
4. Conduit or EMT bent with a pipe tee or vise will not be accepted.
5. Do not install crushed or deformed conduits or EMT.

Q. Install conduit or EMT clamps:
1. At intervals as required by the NEC.
2. Above suspended ceilings, metal supports may be installed as permitted by the NEC, except that conduit cannot be supported or secured to the T-bar grid or from the wire supporting the T-bar grid.

3. Trapeze, split ring, band or clevis hanger may be installed as permitted by the NEC. Trapeze hangers shall be structural metal channels, angle irons or preformed metal channel shapes with the conduit and EMT runs held on specific center by U bolts, clips or clamps. Do not support conduit from ceiling suspension wire or from other conduit.
4. Chain, wire or perforated strap supports will not be acceptable. Nor are they acceptable as a means of securing the conduit.
5. Fasten the clamps and other supports as follows:

    a. For new masonry or concrete structures, install threaded metal inserts prior to pouring the concrete.
    b. For existing solid masonry or reinforced concrete structures:

        1. Install expansion anchors and bolts or approved power-set fasteners.
        2. Expansion anchors and bolts shall be not less that 1/4 inch diameter and shall extend not less than 3 inches into the concrete or masonry.
        3. Power-set fasteners shall be not less than 1/4-inch diameter and shall extend not less than 1-1/4-inch into the concrete.

    c. For hollow masonry install toggle bolts. Bolts supported only by plaster will not be accepted.
    d. For metal structures install machine screws.
    e. Attachments to wood plug, rawl plug, soft metal insert or wood blocking will not be permitted.

R. For vertical runs of conduit of EMT:
1. Install supports for conduit, EMT, cables and wires at intervals as required by the NEC and as indicated on the drawings.
2. Conduit and EMT supports shall be supported by framing for the floors.

S. Conduits and EMT shall be kept 6" away from parallel runs of steam or hot water pipes.

T. Clogged raceways shall be entirely free of obstructions or shall be replaced.

U. Rigid steel conduit installed underground and in concrete shall be wrapped with Scotchwrap #50 corrosion protection tape.

V. All empty conduits shall have nylon pull cord installed to provide for installation of cables, conductors or wiring. All empty conduits stubbed out below grade shall have be capped and provided with a concrete marker. All spare conduits stubbed up through slab shall have a cap installed to prevent debris from entering conduit.

W. Do not combine conduit homeruns. Each homerun shall be separately routed directly to panel unless specifically noted otherwise.

X. Install service conduit (TV, electrical, and telephone) as follows:

1. All underground entrances shall have metallic sleeves through building foundation walls and extend to undisturbed ground to avoid shear, and shall be full weight, threaded hot-dipped galvanized rigid steel conduit.
2. All 90 degree bends to be rigid metallic conduit, with a radius of not less than 10 times the diameter of the conduit.
3. Maintain a minimum cover of 24 inches below final grade for conduits.

Y. Telephone conduits:

1. Where telephone conduit runs are longer than 100'-0" or have more than two 90° bends (or equivalent) or have a reverse bend, pull boxes shall be provided.

Z. Do not install conduit in cavity between concrete block and brick. Conduit shall not be stubbed up into this cavity or routed horizontally in cavity.

AA. All underground conduit installed outside of the building shall have yellow, 4” wide, warning tape, reading “CAUTION-ELECTRICAL LINES BELOW” installed in trench above conduit. Install warning tape 12” below grade.

BB. For exterior locations provide 304 stainless steel channel, conduit clamps, threaded rod and hardware of equivalent dimensions identified for exterior locations. For interior locations all parts and hardware shall be zinc-coated or have equivalent corrosion protection.

END OF SECTION

SECTION 260030
LOW-VOLTAGE ELECTRICAL POWER CONDUCTORS AND CABLES

PART 1 - GENERAL

1.1 SUMMARY

A. Section Includes:

1. Copper building wire rated 600 V or less.
2. Connectors, splices, and terminations rated 600 V and less.

1.2 ACTION SUBMITTALS

A. Product Data: For each type of product.

B. Field quality-control reports.

PART 2 - PRODUCTS

2.1 Manufacturers: Subject to compliance with requirements, provide products by one of the following:

1. Alpha Wire Company.
2. Cerro Wire LLC.
3. Encore Wire Corporation.
4. General Cable; General Cable Corporation.
5. Senator Wire & Cable Company.
6. Southwire Company.

2.2 COPPER BUILDING WIRE

A. Description: Flexible, insulated and uninsulated, drawn copper current-carrying conductor with an overall insulation layer or jacket, or both, rated 600 V or less.

B. Standards:

1. Listed and labeled as defined in NFPA 70, by a qualified testing agency, and marked for intended location and use.
2. RoHS compliant.

3. Conductor and Cable Marking: Comply with wire and cable marking according to UL's "Wire and Cable Marking and Application Guide."

C. Conductors: Copper, complying with ASTM B 3 for bare annealed copper and with ASTM B 8 for stranded conductors.

D. Conductor Insulation:

1. Type THHN and Type THWN-2: Comply with UL 83.
2. Type THW and Type THW-2: Comply with NEMA WC-70/ICEA S-95-658 and UL 83.
3. Type XHHW-2: Comply with UL 44.

2.3 CONNECTORS AND SPLICES

A. Description: Factory-fabricated connectors, splices, and lugs of size, ampacity rating, material, type, and class for application and service indicated; listed and labeled as defined in NFPA 70, by a qualified testing agency, and marked for intended location and use.

B. Lugs: One piece, seamless, designed to terminate conductors specified in this Section.

1. Material: Copper.
2. Type: Two hole with long barrels.
3. Termination: Compression.

PART 3 - EXECUTION

3.1 CONDUCTOR MATERIAL APPLICATIONS

A. Feeders: Type THHN/THWN-2, single conductors in raceway.

B. Branch Circuits: Type THHN/THWN-2, single conductors in raceway.

3.2 INSTALLATION OF CONDUCTORS AND CABLES

A. Conceal cables in finished walls, ceilings, and floors unless otherwise indicated.

B. Complete raceway installation between conductor and cable termination points according to Section 26 05 33 "Raceways and Boxes for Electrical Systems" prior to pulling conductors and cables.

C. Use manufacturer-approved pulling compound or lubricant where necessary; compound used must not deteriorate conductor or insulation. Do not exceed manufacturer's recommended maximum pulling tensions and sidewall pressure values.

D. Use pulling means, including fish tape, cable, rope, and basket-weave wire/cable grips, that will not damage cables or raceway.

E. Install exposed cables parallel and perpendicular to surfaces of exposed structural members, and follow surface contours where possible.

F. Support cables according to Section 26 05 29 "Hangers and Supports for Electrical Systems."

3.3 CONNECTIONS

A. Tighten electrical connectors and terminals according to manufacturer's published torque-tightening values. If manufacturer's torque values are not indicated, use those specified in UL 486A-486B.

B. Make splices, terminations, and taps that are compatible with conductor material and that possess equivalent or better mechanical strength and insulation ratings than unspliced conductors.

3.4 IDENTIFICATION

A. Identify and color-code conductors and cables according to Section 26 05 53 "Identification for Electrical Systems."

B. Identify each spare conductor at each end with identity number and location of other end of conductor, and identify as spare conductor.

3.5 SLEEVE AND SLEEVE-SEAL INSTALLATION FOR ELECTRICAL PENETRATIONS

A. Install sleeves and sleeve seals at penetrations of exterior floor and wall assemblies. Comply with requirements in Section 26 05 44 "Sleeves and Sleeve Seals for Electrical Raceways and Cabling."

3.6 FIRESTOPPING

A. Apply firestopping to electrical penetrations of fire-rated floor and wall assemblies to restore original fire-resistance rating of assembly according to Section 07 84 13 "Penetration Firestopping."

3.7 FIELD QUALITY CONTROL

A. Perform the following tests and inspections:

1. After installing conductors and cables and before electrical circuitry has been energized, test service entrance and feeder conductors and conductors feeding the following critical equipment and services for compliance with requirements.
2. Perform each of the following visual and electrical tests:

    a. Inspect exposed sections of conductor and cable for physical damage and correct connection according to the single-line diagram.
    b. Test bolted connections for high resistance using one of the following:

        1) A low-resistance ohmmeter.
        2) Calibrated torque wrench.
        3) Thermographic survey.

    c. Inspect compression applied connectors for correct cable match and indentation.
    d. Inspect for correct identification.
    e. Inspect cable jacket and condition.
    f. Insulation-resistance test on each conductor with respect to ground and adjacent conductors. Apply a potential of 500-V dc for 300-V rated cable and 1000-V dc for 600-V rated cable for a one-minute duration.
    g. Continuity test on each conductor and cable.
    h. Uniform resistance of parallel conductors.

B. Test and Inspection Reports: Prepare a written report to record the following:

1. Procedures used.
2. Results that comply with requirements.
3. Results that do not comply with requirements and corrective action taken to achieve compliance with requirements.

C. Cables will be considered defective if they do not pass tests and inspections.

END OF SECTION

SECTION 260040
OUTLETS

1.01 SUBMITTALS

A. Shop drawings shall be submitted and shall consist of manufacturer's published literature.

1.02 MANUFACTURERS

A. Acceptable manufacturers are:

1. Raco
2. Steel City
3. Appleton
4. Hubbell

1.03 MATERIALS

A. Boxes shall be galvanized pressed sheet steel for all concealed work, unless otherwise specified or indicated on the drawings.

B. Where conduit runs are exposed, outlet shall be of the cast metal type, unless located in a highly corrosive area.

C. For concealed work each box shall be provided with a square cornered plaster ring.

D. Each surface lighting fixture, receptacle and switch shall be provided with flush mounted outlet box. All outlets installed in panels and other architectural features shall be centered. The location of any outlet may be moved as much as 10'-0" by the Engineer before the outlet is placed without incurring any extra cost. All dimensions refer to the finished floor line. Outlet boxes shall be pressed sheet steel and shall be galvanized for all concealed work. Where conduit runs are exposed outlets shall be of the cast metal type, unless located in a highly corrosive area.

E. Boxes shall be for the service and the type of outlet and shall not be less than 4" square and 1-1/2" deep except where otherwise specified. Boxes installed in walls shall be provided with a square cornered 1-1/2" plaster ring installed flush with surface of wall. Coordinate depth of plaster ring

required for particular wall construction. Each outlet box above ceiling shall be supported from a structural member of the building either directly or by using a substantial and approved metal support. Conduit is not an approved means of support. Boxes installed in wall shall be supported either directly to a stud or between studs utilizing an approved bar hanger. In no case shall switch box support and clips used for mounting boxes in old work be used unless specifically called for. Top of outlet box shall be level.

F. All ceiling or wall recessed outlet boxes or their associated plaster rings shall be flush with the finished surface. Using coverplate to secure wiring devices or shimming the device is not acceptable. Contractor shall exercise due care when cutting opening in walls or ceilings for outlet boxes so that opening size will permit the proper installation of boxes and devices. Fixture studs in ceilings and bracket outlets shall be bolted with stove bolts or shall be locking type of stud mounting.

G. In addition to boxes indicated, install enough boxes to prevent damage to cables and wires during pulling-in operations.

H. Remove only knockouts as required and plug unused openings. Use threaded plugs for cast metal boxes and snap-in metal covers for sheet metal boxes.

I. "There shall be no outlets installed back to back. A minimum of 4" shall separate each outlet."

J. Where the volume allowed per conductor exceeds that allowed in Table 370-6(b) of the NEC for the minimum size outlet specified, a larger size outlet box shall be used and shall be sized in accordance with the table noted above.

K. Outlet boxes shall be clean and free from dust, paint, dirt, plaster ready mix joint compound and /or any other debris.

1.04 LABELING AND IDENTIFICATION

A. All junction box cover plates shall be labeled identifying the system it contains. The label shall be neatly hand written with a wide tip permanent non-removable marker and be easily identified. Junction boxes containing line voltage wiring shall include panel and circuit designation (ex. HA - 1,3,5 or LA – 2,4,6). Junction boxes utilized for low

voltage system shall be labeled in accordance with the system (ex. FA for Fire Alarm System).

END OF SECTION

SECTION 260050
WIRING DEVICES AND DEVICE PLATE

1.01 SUBMITTALS

A. Submit product data under provisions of Section 260000, GENERAL.

B. Provide product data showing configurations, finishes, dimensions, and manufacturer's instructions.

1.02 REFERENCES

A. FS W-C-596 - Electrical Power Connector, Plug, Receptacle, and Cable Outlet.

B. FS W-S-896 - Switch, Toggle.

C. NEMA WD 1 - General-Purpose Wiring Devices.

D. NEMA WD 5 - Specific-Purpose Wiring Devices.

1.03 MANUFACTURERS

A. For the purpose of selecting quality and type of device, equipment manufactured by Hubbell has been specified. The following manufacturers meeting this specification are acceptable:

1. Pass and Seymour
2. Cooper
3. Leviton

1.04 PRODUCTS

A. Switches: All wall switches shall be rated 20 ampere, 120/277 volts, have self grounding provisions, side wiring only and shall be of the silent type.

1. Single pole: HBL 1221.
2. Double pole single throw: HBL 1222.
3. Three way: HBL 1223.
4. Four way: HBL 1224.

5. Key switch single pole HBL 1221l, three-way: HBL 1223L, four-way: HBL 1234L. Three way and four way key switches shall be keyed alike.
6. Single pole, pilot light, red handle (lit in “on” position): HBL 1297.
7. Despard single pole switches installed in mullions. Pass & Seymour ACD 201.

B. Receptacle: All receptacles shall be of the grounding type, tamper resistant (TR) rated, of the configuration shown on the drawings and shall be flush wall mounting type.

1. Standard duplex receptacle: 20 ampere, 125 volt, NEMA type 5-20 R, 2 pole, 3 wire, straight blade, U-grounding slot. HBL 5362. (TR)

2. Power, receptacle with matching plug: 20 ampere, 125/250 volt, NEMA type 14-20, 3 pole 4 wire grounded, straight blade type. HBL 8410.

3. Power receptacle with matching plug: 20 ampere, 250 volt, NEMA type 6-20R 2-pole, 3 wire grounded, straight blade type. HBL 5462.

4. Power receptacle with matching plug: 30 ampere, 250 volt, NEMA type 6-30R 2-pole, 3 wire, u-grounded slot, straight blade type. HBL 9330.

5. Power receptacle with matching plug: 50 ampere, 125/250 volt, NEMA type 14-50R, 3-pole, 4 wire grounded, straight blade type. HBL 9450A.

6. Ground fault interrupter receptacle: Specification Grade, tamper resistant (TR) rated, 20 ampere, 125 volts, NEMA type 5-20R, 2-pole, 3-wire with grounded U slot. GF 5262. (TR)

C. Device plates: Plates shall be furnished for all devices and outlets indicated on the drawings (telephone, computer, TV, etc.). All plates on masonry walls shall be oversized jumbo type.

1. Flush mounted plates: Beveled type with smooth rolled outer edge, stainless steel type 302 with brushed finish.

2. Surface box plates, beveled, galvanized steel, pressure formed for smooth edge to fit box, unless located in a highly corrosive area.

3. Die cast weatherproof cover. Lockable hasp vertical mounting. Intermatic #WP1010MC.

1.05 INSTALLATION

A. Switches:

1. Switches shall be connected to the live side of the circuit and shall control only the outlets indicated.

2. Conductors shall be looped around the terminal screw.

3. Where more than one switch is indicated in the same location switches shall be gang mounted under a common plate.

4. Where multi-wire switching (360 volt potential) occurs, a barrier shall be provided between switches.

5. Center line of switches in general, shall be set 3'-6" above the floor (off position down) and shall clear the door trim or corner by 4" or center the space occupied.

6. Architectural plans shall be consulted before placing switches so they will in every case be located on the strike side of the door and clear door, chair, window, and baseboard moldings.

7. Switches shall be screwed tight to the boxes and shall not depend on the cover plate to pull them tight.

B. Receptacles:

1. Conductors shall be looped around the terminal screws, "DO NOT BACK WIRE DEVICES."

2. Receptacles shall be grounded by the green wire bond and shall be pigtailed as shown on the drawings.

3. Receptacles shall be screwed tight to the plaster ring or outlet box and shall not depend on the device plate to pull them tight.

4. Center line of general use receptacles shall be in general, set 18" above the floor with receptacle mounted in the vertical position and with grounding pole at the bottom.

5. Coordinate receptacle height with Architectural drawings and locate so that bottom of receptacle plate shall be 1" above counter or back splash and clear all moldings.

6. Center line of receptacles located adjacent to lavatories in toilets shall be set 3'-6" above floor.

7. Receptacles serving water coolers shall be located within cooler housing or as close to bottom of housing as possible. Cord serving unit shall be as short as possible. In no case shall cord or receptacle be seen from normal viewing angle.

8. All receptacles installed in bathrooms, toilets, within 6 feet of lavatories or sinks or on building exterior shall be ground fault circuit interrupter type.

9. All receptacles installed outdoors shall be GFCI type.

C. Plates:

1. Plates shall be level and all edges shall be in full contact with wall.

2. Plates shall be furnished for all devices and other outlets indicated on the drawings.

3. Install plates on outlet boxes and junction boxes in unfinished areas above ceilings and on surface mounted outlets.

4. Plates shall not be used to keep devices secure.

5. Plates shall be clean and free from dust, plaster or paint and spots.

6. Plate shall cover openings around outlets.

END OF SECTION

SECTION 260060
LED INTERIOR LIGHTING

PART 1 - GENERAL

1.1 RELATED DOCUMENTS

A. Drawings and general provisions of the Contract, including General and Supplementary Conditions and Division 01 Specification Sections, apply to this Section.

1.2 SUMMARY

A. Section Includes:

1. Interior solid-state luminaires that use LED technology.
2. Lighting fixture supports.

1.3 DEFINITIONS

A. CCT: Correlated color temperature.

B. CRI: Color Rendering Index.

C. Fixture: See "Luminaire."

D. IP: International Protection or Ingress Protection Rating.

E. LED: Light-emitting diode.

F. Lumen: Measured output of lamp and luminaire, or both.

G. Luminaire: Complete lighting unit, including lamp, reflector, and housing.

1.4 SUBMITTALS

A. Product Data: For each type of product.

1. Arrange in order of luminaire designation.
2. Include data on features, accessories, and finishes.
3. Include physical description and dimensions of luminaires.
4. Include emergency lighting units, including batteries and chargers.

5. Include life, output (lumens, CCT, and CRI), and energy efficiency data.
6. Photometric data and adjustment factors based on laboratory tests[, complying with IESNA Lighting Measurements Testing and Calculation Guides, of each lighting fixture type.

    a. Manufacturers' Certified Data: Photometric data certified by manufacturer's laboratory with a current accreditation under the National Voluntary Laboratory Accreditation Program for Energy Efficient Lighting Products.
    b. Testing Agency Certified Data: For indicated luminaires, photometric data certified by a qualified independent testing agency. Photometric data for remaining luminaires shall be certified by manufacturer.

B. Shop Drawings: For nonstandard or custom luminaires.

1. Include plans, elevations, sections, and mounting and attachment details.
2. Include details of luminaire assemblies. Indicate dimensions, weights, loads, required clearances, method of field assembly, components, and location and size of each field connection.
3. Include diagrams for power, signal, and control wiring.

C. Samples: For each luminaire and for each color and texture with standard factory-applied finish.

D. Product Schedule: For luminaires and lamps.

1.5 CLOSEOUT SUBMITTALS

A. Operation and Maintenance Data: For luminaires and lighting systems to include in operation and maintenance manuals.

1. Provide a list of all fixture/lamp types used on Project; use ANSI and manufacturers' codes.

1.6 QUALITY ASSURANCE

A. Luminaire Photometric Data Testing Laboratory Qualifications: Luminaire manufacturer's laboratory that is accredited under the NVLAP for Energy Efficient Lighting Products.

B. Provide luminaires from a single manufacturer for each luminaire type.

C. Each luminaire type shall be binned within a three-step MacAdam Ellipse to ensure color consistency among luminaires.

1.7 DELIVERY, STORAGE, AND HANDLING

A. Protect finishes of exposed surfaces by applying a strippable, temporary protective covering before shipping.

1.8 WARRANTY

A. Warranty: Manufacturer and Installer agree to repair or replace components of luminaires that fail in materials or workmanship within specified warranty period.

B. Warranty Period: Five year(s) from date of Substantial Completion.

PART 2 - PRODUCTS

2.1 LUMINAIRE REQUIMENTS

A. Electrical Components, Devices, and Accessories: Listed and labeled as defined in NFPA 70, by a qualified testing agency, and marked for intended location and application.

B. NRTL Compliance: Luminaires for hazardous locations shall be listed and labeled for indicated class and division of hazard by an NRTL.

C. Recessed Fixtures: Comply with NEMA LE 4.

D. Bulb shape complying with ANSI C79.1.

E. Lamp base complying with ANSI C81.61 or IEC 60061-1.

F. CRI of 80. CCT of 4000 K.

G. Rated lamp life of 50,000 hours.

H. Lamps dimmable from 100 percent to 0 percent of maximum light output.

I. Internal driver.

J. Nominal Operating Voltage: 120 V ac or 277 V ac.

1. Lens Thickness: At least 0.125 inch minimum unless otherwise indicated.

K. Housings:

1. Extruded-aluminum housing and heat sink.
2. Clear powder-coat finish.

2.2 MATERIALS

A. Metal Parts:

1. Free of burrs and sharp corners and edges.
2. Sheet metal components shall be steel unless otherwise indicated.
3. Form and support to prevent warping and sagging.

B. Doors, Frames, and Other Internal Access: Smooth operating, free of light leakage under operating conditions, and designed to permit relamping without use of tools. Designed to prevent doors, frames, lenses, diffusers, and other components from falling accidentally during relamping and when secured in operating position.

C. Diffusers and Globes:

1. Acrylic Diffusers: One hundred percent virgin acrylic plastic, with high resistance to yellowing and other changes due to aging, exposure to heat, and UV radiation.
2. Glass: Annealed crystal glass unless otherwise indicated.
3. Lens Thickness: At least 0.125 inch minimum unless otherwise indicated.

D. Housings:

1. Extruded-aluminum housing and heat sink.
2. Clear powder-coat painted finish.

E. Factory-Applied Labels: Comply with UL 1598. Include recommended lamps. Locate labels where they will be readily visible to service personnel, but not seen from normal viewing angles when lamps are in place.

1. Label shall include the following lamp characteristics:

a. "USE ONLY" and include specific lamp type.
b. Lamp diameter, shape, size, wattage, and coating.
c. CCT and CRI for all luminaires.

2.3 METAL FINISHES

A. Variations in finishes are unacceptable in the same piece. Variations in finishes of adjoining components are acceptable if they are within the range of approved Samples and if they can be and are assembled or installed to minimize contrast.

2.4 LUMINAIRE FIXTURE SUPPORT COMPONENTS

A. Single-Stem Hangers: 1/2-inch steel tubing with swivel ball fittings and ceiling canopy. Finish same as luminaire.

B. Wires: ASTM A 641/A 641 M, Class 3, soft temper, zinc-coated steel, 14 gage.

C. Rod Hangers: 3/16-inch (5-mm) minimum diameter, cadmium-plated, threaded steel rod.

D. Hook Hangers: Integrated assembly matched to luminaire, line voltage, and equipment with threaded attachment, cord, and locking-type plug.

PART 3 - EXECUTION

3.1 EXAMINATION

A. Examine substrates, areas, and conditions, with Installer present, for compliance with requirements for installation tolerances and other conditions affecting performance of the Work.

B. Examine roughing-in for luminaire to verify actual locations of luminaire and electrical connections before fixture installation. Proceed with installation only after unsatisfactory conditions have been corrected.

3.2 TEMPORARY LIGHTING

A. If approved by the Engineer, use selected permanent luminaires for temporary lighting. When construction is sufficiently complete, clean luminaires used for temporary lighting and install new lamps.

3.3 INSTALLATION

A. Comply with NECA 1.

B. Install luminaires level, plumb, and square with ceilings and walls unless otherwise indicated.

C. Install lamps in each luminaire.

D. Supports:

1. Sized and rated for luminaire weight.
2. Able to maintain luminaire position after cleaning and relamping.
3. Provide support for luminaire without causing deflection of ceiling or wall.
4. Luminaire mounting devices shall be capable of supporting a horizontal force of 100 percent of luminaire weight and vertical force of 400 percent of luminaire weight.

E. Flush-Mounted Luminaire Support:

1. Secured to outlet box.
2. Attached to ceiling structural members at four points equally spaced around circumference of luminaire.
3. Trim ring flush with finished surface.

F. Wall-Mounted Luminaire Support:

1. Attached to structural members in walls.

2. Do not attach luminaires directly to gypsum board.

G. Ceiling-Mounted Luminaire Support:

1. Ceiling mount with two 5/32-inch- diameter aircraft cable supports adjustable to 120 inches in length.
2. Ceiling mount with pendant mount with 5/32-inch diameter aircraft cable supports adjustable to 120 inches in length.
3. Ceiling mount with hook mount.

H. Suspended Luminaire Support:

1. Pendants and Rods: Where longer than 48 inches, brace to limit swinging.
2. Stem-Mounted, Single-Unit Luminaires: Suspend with twin-stem hangers. Support with approved outlet box and accessories that hold stem and provide damping of luminaire oscillations. Support outlet box vertically to building structure using approved devices.

3. Continuous Rows of Luminaires: Use tubing or stem for wiring at one point and tubing, rod or wire support for suspension for each unit length of luminaire chassis, including one at each end.
4. Do not use ceiling grid as support for pendant luminaires. Connect support wires or rods to building structure.

I. Ceiling-Grid-Mounted Luminaires:

1. Secure to any required outlet box.
2. Secure luminaire to the luminaire opening using approved fasteners in a minimum of two (2) locations, at opposite corners of luminaire.
3. Use approved devices and support components to connect luminaire to ceiling grid and to building structure in a minimum of two (2) locations, spaced at opposite diagonal corners of luminaire.

J. Flexible conduit and wiring from outlet box to fixture shall be minimum 3/8"C., and minimum #18 THHN conductors. Factory supplied whips of smaller ratings are not acceptable. Where 0-10 volt dimming is utilized, use #18 (TJP), grey/purple jacketed conductor integral to flex.

3.4 IDENTIFICATION

A. Identify system components, wiring, cabling, and terminals. Comply with requirements for identification specified in Section 260120 “ Equipment Identification."

3.5 FIELD QUALITY CONTROL

A. Perform the following tests and inspections:

1. Operational Test: After installing luminaires, switches, and accessories, and after electrical circuitry has been energized, test units to confirm proper operation.
2. Test for Emergency Lighting: Interrupt power supply to demonstrate proper operation. Verify transfer from normal power to battery power and retransfer to normal.

B. Luminaire will be considered defective if it does not pass operation tests and inspections.

C. Prepare test and inspection reports.

END OF SECTION

SECTION 260070
DISCONNECT SWITCHES

1.01 SUBMITTALS

A. Shop drawings shall be submitted and shall consist of manufacturer's published literature.

1.02 MANUFACTURERS

A. Acceptable manufacturers are:
   1. Square "D" Company
   2. G. E.
   3. Siemens
   4. Eaton

1.03 EQUIPMENT

A. Disconnect switches shall be provided for all motors and strip heaters located out of sight of motor controller, and where specifically indicated on the drawings. Disconnect switches shall disconnect all ungrounded conductors. When exposed to weather, enclosure shall be NEMA – 4X. Switches shall be installed to be fully accessible in accordance with Article 110-26 of the National Electrical Code.

B. All disconnects shall be heavy duty type and shall be equipped with factory installed equipment ground kit bonded to the can for grounding purposes.

C. For single phase motors, a single - or double-pole toggle switch, rated only for alternating current, will be acceptable for capacities less than 30 amperes, provided the ampere rating of the switch is at least 125 percent of the motor rating. Enclosed safety switches shall be horsepower rated in conformance with Table III of Fed. Spec. W-D-865. Switches shall disconnect all ungrounded conductors.

D. Each disconnect serving ground mounted exterior A/C units shall be equipped with a padlock (Master 3206) all keyed alike.

E. All disconnects shall be equipped with provisions to lock the handle in the OFF position.

F. All disconnects shall be fusible type, fused in accordance with the name plate data on the unit. Disconnects serving water heaters or resistance heat strips shall be fused at 125% of the full load amps of the unit.

G. Install fuses so that ampere rating can be read without having to remove fuses.

H. All fuses shall be as noted in Section 26 00 15.

I. Disconnects shall be identified as required under Section 26 01 20.

J. Maintain 3'-0" clearance in front of disconnect having voltage rating of 250 volts and 4'-0" clearance in front of disconnect having voltage rating of 480 volts. Do not locate disconnect over other electrical equipment (i.e.: transformers). See 26 00 00-1.14-I.

END OF SECTION

SECTION 260100
PULL BOXES AND JUNCTION BOXES AND FITTINGS

1.01 PULL BOXES AND JUNCTION BOXES AND FITTINGS

A. Boxes shall be provided in the raceway systems wherever required for the pulling of wires and the making of connections.

B. Pull boxes of not less than the minimum size required by the National Electrical Code Article 370 shall be constructed of code-gauge galvanized sheet steel. Boxes shall be furnished with screw-fastened covers. Covers on flush wall mounted boxes in well appointed areas (offices, reception, classrooms, media center, etc) shall be minimum 1/16 302 stainless steel. Boxes located on the exterior of the building shall be watertight. Covers shall be secured with tamper proof screws.

C. Boxes shall be securely and rigidly fastened to the surface of which they are mounted or shall be supported from structural member of the building either directly or by using a substantial and approved metal rod or brace.

D. All boxes shall be so installed that the wiring contained in them can be rendered accessible without removing part of the building.

E. Where several circuits pass through a common pull box, the circuits shall be tagged to indicate clearly their electrical characteristics, circuit number and designation.

F. All junction boxes larger than 4" x 4" flush mounted in wall shall have overlapping cover plate to cover rough-in openings.

END OF SECTION

SECTION 260110
GROUNDING

PART 1 GENERAL:

1.01 RELATED DOCUMENTS

A. Drawings and general provisions of the Contract documents including General and Supplementary Conditions and Division 1 Specification Sections, apply to the Section.

1.02 SUMMARY

A. The work required under this section of the specifications consists of furnishing, installation and connections of the building secondary grounding systems. Exterior branch circuit wiring and feeder conductors extended beyond the building are included. The building electrical system shall be a 3 phase, 4 wire grounded wye delta system supplemented with equipment grounding system. Equipment grounding system shall be established with equipment grounding conductors; the use of metallic raceways for equipment grounding is not acceptable.

1.03 QUALITY ASSURANCE

A. Industry Referenced Standards: The following specifications and standards are incorporated into and become a part of this Specification by Reference.

1. Underwriters' Laboratories, Inc. (UL) Publications:

No.44 Rubber-Insulated Wire & Cables
No.83 Thermoplastic-Insulated Wires
No.467 Electrical Grounding & Bonding Equipment
No.493 Thermoplastic-Insulated Underground Feeder & Branch Circuit Cables
No.486 Wire Connectors and Soldering Lugs

2. National Electrical Manufacturers' Standards (NEMA):

WC-5 Thermoplastic Insulated Wire & Cable
WC-7 Cross-Linked-Thermosetting Polyethylene Insulated Wire

3. National Fire Protection Association Publication (NFPA):

No.70 National Electrical Code (NEC)

B. Acceptable Manufacturers: Products produced by the following manufacturer which conform to this specification are acceptable.

1. Hydraulically applied conductor terminations:

a. Square D
b. Burndy
c. Ilsco
d. Scotch (3M)
e. Thomas and Betts (T&B)
f. Anderson

2. Mechanically applied (crimp) conductor terminations:

a. Scotch (3M)
b. Ideal
c. Thomas and Betts (T&B)
d. Burndy

PART 2 PRODUCTS:

2.01 GENERAL MATERIALS REQUIREMENTS

A. Provide all materials under this section of the specifications. All materials shall be new.

B. All materials shall be UL listed and bear a UL label.

C. Refer to the specific specification section for the description and requirements of materials mentioned herein for installation.

2.02 GROUNDING CONDUCTORS

A. Grounding electrode conductor shall be bare or green insulated copper conductor sized as indicated on the drawings.

B. Equipment grounding conductors shall be green insulated type THHN conductors sized as indicated on the drawings. Where size is not

indicated on the drawings, conductor size shall be determined from the National Electrical Code table of sizes of equipment grounding conductors.

C. Bonding jumpers shall be flexible copper bonding jumpers sized in accordance with the National Electrical Code table on sizes of equipment grounding electrode conductors.

2.03 MOTOR CONTROLLERS

A. Provide a conductor termination grounding lug bonded to the enclosure of each motor controller.

B. Provide an equipment ground bar with bonding screw in each disconnect for grounding purposes.

2.04 DEVICES

A. Each receptacle and switch device shall be furnished with a grounding screw connected to the metallic device frame. Bond equipment grounding conductor to each outlet box. For isolated ground receptacles, bond equipment grounding conductor to box, and isolated ground conductor to device grounding screw.

2.05 GROUND RODS

A. Ground rods shall be 3/4" x 10'-0" copper clad steel. Connection to all ground rods shall be by exothermic weld.

PART 3 EXECUTION

3.01 INSTALLATION

A. Ground all non-current carrying parts of the electrical system, i.e., wireways, equipment enclosures and frames, junction and outlet boxes, machine frames and other conductive items in close proximity with electrical circuits, to provide a low impedance path for potential grounded faults.

B. Service entrance and separately derived electrical systems, grounding electrode system.

1. The neutral conductor of the electrical service serving the premises wiring system shall be grounded to the ground bus bar in the service equipment which shall be grounded to the cold water system, the ground rod system, and other grounding electrodes specified herein or indicated on the drawings. Grounding electrode conductors shall be installed in rigid, non-metallic conduit to point of ground connection, unless subject to physical damage in which case they shall be installed in galvanized rigid steel. Where metallic conduit is permitted, bond conduit at both ends to grounding electrode conductor with a UL bonding bushing.

2. Make connection to main water line, fire sprinkler piping, and gas piping entering the building. Make connections ahead of any valve or fittings whose removal may interrupt ground continuity. Install a bonding jumper of the same size as the grounding conductor around the water meter.

3. Bond together the following systems to form the grounding electrode system. All system connections shall be made as close as possible to the service entrance equipment and each connected at the service entrance equipment ground bus. Do not connect electrode systems together except at ground bus.

    a. Cold water piping system
    b. Ground rod system
    c. Structural steel metal building frame, see detail on drawings
    d. Main re-bar in a foundation footing
    e. Fire sprinkler piping

4. Ground the neutral of all dry type transformers as indicated on the drawings.

5. Grounding electrode connections to structural steel, reinforcing bars, ground rods, or where indicated on the drawings shall be with chemical exothermic weld connection devices recommended for the particular connection type. Connections to piping shall be with UL listed mechanical ground clamps.

6. Bonding shall be in accordance with the National Electrical Code.

7. Install ground rods where indicated on the drawings with the top of the ground rods 12" below finished grade.

C. Equipment Grounding Conductor

1. Grounding conductors shall be provided in all branch circuit raceways and cables. Grounding conductors shall be the same AWG size as branch circuit conductors.

2. Grounding conductors for feeders are typically indicated on the drawings and the raceway is sized to accommodate grounding conductor shown. Where grounding conductor size is not indicated on the drawings, conductor shall be in accordance with the equipment grounding conductor table of the National Electrical Code.

3. A grounding conductor shall be installed in all flexible conduit installations. For branch circuits, grounding conductor shall be sized to match branch circuit conductors.

4. A feeder serving several panelboards shall have a continuous grounding conductor which shall be connected to each related cabinet grounding bar.

5. The equipment grounding conductor shall be attached to equipment with bolt or sheet metal screw used for no other purpose. Where grounding conductor is stranded, attachment shall be made with lug attached to grounding conductor with crimping tools.

6. Ground all motors by drilling and tapping the bottom of the motor junction box with a round head bolt used for no other purpose. Conductor attachment shall be through the use of a lug attached to conductor with a crimping tool.

7. Equipment grounding conductors shall terminate on panelboard, switchboard, or motor control center grounding bus only. Do not terminate on neutral bus. Provide a single terminals lug for each conductor. Conductor shall terminate the same section as the phase conductors originate. Do not terminate neutral conductors on the ground bus.

C. Other Grounding Requirements

1. Each telephone backboard and data network rack shall be provided with a No.6 grounding conductor. Ground conductor shall be routed to ground bar in nearest panel. Terminate conductor by stapling to backboard. Provide 6' slack conductor. If conductor is routed in a metal conduit, provide a grounding bushing at conduit end and bond to lug on ground bushing.
2. Lighting fixtures shall be grounded with a green insulated ground wire secured to the fixture with a UL listed bond lug, screw, or clip specifically made for such use.

3.02 TESTING

A. Upon completion of the ground rod installation, grounding resistance reading shall be taken before connection is made to the building cold water piping system. Ground resistance readings shall not be taken within forty-eight hours of rainfall. Results of ground resistance readings shall be forwarded, in writing, immediately to the Architect and Owner.

END OF SECTION

SECTION 260120
EQUIPMENT IDENTIFICATION

1.01 SUBMITTALS

A. Submit sample of laminated plastic identification plate with lettering.

1.02 MATERIALS

A. Laminated plastic plates with 3/16" high white letter etched on black background.

B. Plates shall be permanently mounted utilizing pop rivets or a permanent mastic/epoxy.

C. Painted, stenciled or indented tape identification is not acceptable.

1.03 ITEM IDENTIFICATION

A. All electrical apparatus such as wiring troughs, panelboards, individual circuit breakers, transformers and disconnect switches shall have laminated plastic identification plates. Identification shall match labeling shown on plans.

B. A "steel" circuit directory frame permanently attached at factory (not glued), and a directory card with a plastic covering shall be provided on the inside of each panel door. The directory shall be typed to identify the load fed by each circuit and the areas served. Spaces or room numbers shown on the drawings are not necessarily the final numbers to be assigned to these areas. The Contractors shall before completion of the project obtain from the Architect final space or room numbers so that it can be typed onto directory.

C. Circuit breakers and disconnects shall identify the equipment served and circuit and panel from which it is served.

D. On all panelboards the exterior identification plate shall match that on the drawings and the panel and circuit number serving the panel shall be designated within the panel.

1.04 LABELING AND IDENTIFICATION

A. All junction box cover plates shall be labeled identifying the system it contains. The label shall be neatly hand written with a wide tip

permanent non-removable marker and be easily identified. Junction boxes containing line voltage wiring shall include panel and circuit designation (ex. HA - 1,3,5 or LA – 2,4,6). Junction boxes utilized for low voltage system shall be labeled in accordance with the system (ex. FA for Fire Alarm System).

END OF SECTION

SECTION 260130
DATA OR VOICE CONDUIT AND OUTLET SYSTEM

1.01 CONDUIT SYSTEM

A. Provide a complete system of conduits and outlet boxes for data and voice wiring. Each data or voice outlet shall have a 1" conduit routed from the flushed recessed outlet box up to the accessible ceiling space above. Turn conduit out above ceiling with a 90° horizontal elbow and terminate with an insulated bushing. Where ceiling finish is exposed structure (i.e. no acoustical tile ceiling), extend conduit to an area with an accessible gypboard/acoustical ceiling. Provide nylon pull string in conduit.

B. All conduit and outlet boxes shall be for data and voice cable only. Joint use with sound systems, fire, telephone, etc. it is not acceptable.

C. Location of outlets shall be as shown on the drawings.

D. Height of wall outlets shall be as noted on the drawings. All wall outlet boxes in new construction shall be two gang type, 4" x 4" x 2 1/8" deep, with single gang plaster rings. Plaster rings shall be flush with finish of wall. Coordinate depth of plaster ring required with type of wall construction.

E. Install a quaduplex receptacle at the telephone backboard and serve with a dedicated 20 ampere 120 volt circuit. The telephone shall consist of one - 3/4" x 4' x 8' plywood. Paint all sides and edges to match room finish. Install a #6 ground conductor from the nearest ground bar in panel, provide 8'-0" of coiled slack at board. Plywood shall be fire rated. Paint shall be fire retardant.

F. See site plan for routing of telephone service conduit. Prior to routing of conduit, coordinate an on-site meeting with local utility company to determine exact location. Provide a 200 pound minimum pull strength nylon cord in the service conduit. Cap off any conduit not utilized.

G. Each data network rack shall be grounded with a #6 copper routed in ½" conduit to the ground bar in the nearest panel. If conduit is metal, provide grounding bushings at each end of conduit. Provide a quadruplex receptacle at each data network rack and serve from a dedicated 20 amp, 120 volt circuit.

H. Conduit and its installation shall be as covered under Section 26 00 20 of these specifications.

I. Outlets and their installation shall be covered under Section 26 00 40 of these specifications.

J. All conduit shall be concealed unless otherwise noted.

K. Provide 302 jumbo stainless steel blank wall plates for all outlets not cabled.

END OF SECTION

SECTION 260160
SURGE PROTECTION FOR LOW-VOLTAGE ELECTRICAL POWER CIRCUITS

PART 1 - GENERAL

1.1 SUMMARY

A. Section includes field-mounted SPDs for low-voltage (120 to 600 V) power distribution and control equipment.

1.2 DEFINITIONS

A. Inominal: Nominal discharge current.

B. MCOV: Maximum continuous operating voltage.

C. Mode(s), also Modes of Protection: The pair of electrical connections where the VPR applies.

D. MOV: Metal-oxide varistor; an electronic component with a significant non-ohmic current-voltage characteristic.

E. OCPD: Overcurrent protective device.

F. SCCR: Short-circuit current rating.

G. SPD: Surge protective device.

H. VPR: Voltage protection rating.

1.3 ACTION SUBMITTALS

A. Product Data: For each type of product.

1. Include rated capacities, operating characteristics, electrical characteristics, and furnished specialties and accessories.
2. Copy of UL Category Code VZCA certification, as a minimum, listing the tested values for VPRs, Inominal ratings, MCOVs, type designations, OCPD requirements, model numbers, system voltages, and modes of protection.

1.4 INFORMATIONAL SUBMITTALS

A. Field quality-control reports.

B. Sample Warranty: For manufacturer's special warranty.

1.5 CLOSEOUT SUBMITTALS

A. Maintenance Data: For SPDs to include in maintenance manuals.

1.6 WARRANTY

A. Manufacturer's Warranty: Manufacturer agrees to replace or replace SPDs that fail in materials or workmanship within specified warranty period.

1. Warranty Period: Five years from date of Substantial Completion.

PART 2 - PRODUCTS

2.1 GENERAL SPD REQUIREMENTS

A. SPD with Accessories: Listed and labeled as defined in NFPA 70, by a qualified testing agency, and marked for intended location and application.

B. Comply with NFPA 70.

C. Comply with UL 1449.

D. MCOV of the SPD shall be the nominal system voltage.

2.2 SERVICE ENTRANCE SUPPRESSOR

A. Manufacturers: Subject to compliance with requirements, provide products by one of the following:

1. Eaton Corporation.
2. Emerson Electric Co.
3. GE Zenith Controls.
4. PowerLogics, Inc.
5. Schneider Electric Industries SAS.

B. SPDs: Comply with UL 1449, Type 2.

1. SPDs with the following features and accessories:

a. Internal thermal protection that disconnects the SPD before damaging internal suppressor components.
b. Indicator light display for protection status.
c. Form-C contacts rated at 2 A and 24-V ac, one normally open and one normally closed, for remote monitoring of protection status. Contacts shall reverse on failure of any surge diversion module or on opening of any current-limiting device. Coordinate with building power monitoring and control system.
d. Surge counter.

C. Comply with UL 1283.

D. Peak Surge Current Rating: The minimum single-pulse surge current withstand rating per phase shall not be less than 480 kA. The peak surge current rating shall be the arithmetic sum of the ratings of the individual MOVs in a given mode.

E. Protection modes and UL 1449 VPR for grounded wye circuits with 480Y/277 V 208Y/120 V, three-phase, four-wire circuits shall not exceed the following:

1. Line to Neutral: 1200 V for 480Y/277 V.
2. Line to Ground: 1200 V for 480Y/277 V.
3. Line to Line: 2000 V for 480Y/277 V.

F. Protection modes and UL 1449 VPR for 240/120 V, single-phase, three-wire circuits shall not exceed the following:

1. Line to Neutral: 700 V.
2. Line to Ground: 700 V.
3. Line to Line: 1000 V.

G. SCCR: Equal or exceed 200 kA.

H. Inominal Rating: 20 kA.

2.3 PANEL SUPPRESSORS

A. Manufacturers: Subject to compliance with requirements, provide products by one of the following:

1. Eaton Corporation.
2. Emerson Electric Co.
3. GE Zenith Controls.
4. LEA International; Protection Technology Group.
5. Schneider Electric Industries SAS.

B. SPDs: Comply with UL 1449, Type 2.

1. Include LED indicator lights for power and protection status.
2. Internal thermal protection that disconnects the SPD before damaging internal suppressor components.
3. Include Form-C contacts rated at 5 A and 250-V ac, one normally open and one normally closed, for remote monitoring of protection status. Contacts shall reverse on failure of any surge diversion module or on opening of any current-limiting device. Coordinate with building power monitoring and control system.

C. Peak Surge Current Rating: The minimum single-pulse surge current withstand rating per phase shall not be less than 100 kA. The peak surge current rating shall be the arithmetic sum of the ratings of the individual MOVs in a given mode.

D. Comply with UL 1283.

E. Protection modes and UL 1449 VPR for grounded wye circuits with 480Y/277 V 208Y/120 V, three-phase, four-wire circuits shall not exceed the following:

1. Line to Neutral: 1200 V for 480Y/277 V - 700 V for 208Y/120 V.
2. Line to Ground: 1200 V for 480Y/277 V - 700 V for 208Y/120 V.
3. Neutral to Ground: 1200 V for 480Y/277 V - 700 V for 208Y/120 V.
4. Line to Line: 2000 V for 480Y/277 V - 1200 V for 208Y/120 V

F. Protection modes and UL 1449 VPR for 240/120-V, single-phase, three-wire circuits shall not exceed the following:

1. Line to Neutral: 700 V.
2. Line to Ground: 700 V.
3. Neutral to Ground: 700 V.
4. Line to Line: 1200 V.

G. SCCR: Equal or exceed 200 kA.

H. Inominal Rating: 20 kA.

2.4 ENCLOSURES

A. Indoor Enclosures: NEMA 250, Type 1.

B. Outdoor Enclosures: NEMA 250, Type 4X.

2.5 CONDUCTORS AND CABLES

A. Power Wiring: Same size as SPD leads, complying with Section 26 05 19 "Low-Voltage Electrical Power Conductors and Cables."

B. Class 2 Control Cables: Multiconductor cable with copper conductors not smaller than No. 18 AWG, complying with Section 26 05 19 "Low-Voltage Electrical Power Conductors and Cables."

C. Class 1 Control Cables: Multiconductor cable with copper conductors not smaller than No. 14 AWG, complying with Section 26 05 19 "Low-Voltage Electrical Power Conductors and Cables."

PART 3 - EXECUTION

3.1 INSTALLATION

A. Comply with NECA 1.

B. Install an OCPD or disconnect as required to comply with the UL listing of the SPD.

C. Install SPDs with conductors between suppressor and points of attachment as short and straight as possible, and adjust circuit-breaker positions to achieve shortest and straightest leads. Do not splice and extend SPD leads unless specifically permitted by manufacturer. Do not exceed manufacturer's recommended lead length. Do not bond neutral and ground.

D. Use crimped connectors and splices only. Wire nuts are unacceptable.

E. Wiring:

1. Power Wiring: Comply with wiring methods in Section 26 00 30 "Low-Voltage Electrical Power Conductors and Cables."
2. Controls: Comply with wiring methods in Section 26 00 30 "Low-Voltage Electrical Power Conductors and Cables."

3.2 FIELD QUALITY CONTROL

A. Perform the following tests and inspections with the assistance of a factory-authorized service representative.

1. Compare equipment nameplate data for compliance with Drawings and Specifications.
2. Inspect anchorage, alignment, grounding, and clearances.
3. Verify that electrical wiring installation complies with manufacturer's written installation requirements.

B. An SPD will be considered defective if it does not pass tests and inspections.

C. Prepare test and inspection reports.

3.3 STARTUP SERVICE

A. Complete startup checks according to manufacturer's written instructions.

B. Do not perform insulation-resistance tests of the distribution wiring equipment with SPDs installed. Disconnect SPDs before conducting insulation-resistance tests, and reconnect them immediately after the testing is over.

C. Energize SPDs after power system has been energized, stabilized, and tested.

3.4 DEMONSTRATION

A. Train Owner's maintenance personnel to operate and maintain SPDs.

END OF SECTION

SECTION 260175
FIRESTOPPING

1.01 RELATED DOCUMENTS

A. The requirements of the general conditions, supplementary conditions, and division 1, general requirements, apply to Work in this Section.

1.02 DESCRIPTION

A. This Section describes the requirements for furnishing and installing firestopping for fire-rated construction. This includes:

1. All openings in fire-rated floors and wall assemblies, both blank (empty) and those accommodating penetrating items such as cables, conduits, etc.

1.03 REFERENCES

A. ASTM E 814: "Standard Method of Fire Tests of Through-Penetration Firestops"
B. UL 1479, UBC 7-5: (both are same as A above)
C. ASTM E 119: "Standard Method of Fire Tests of Building Construction and Materials"
D. UL263, UBC 7-1: (both are same as C above)
E. UL 2079: "Standard for Tests for the Fire Resistance of Building Joint Systems"
F. Published Through-Penetration Systems by recognized independent testing agencies.
   1. UL Fire Resistance Directory.
   2. Warnock Hersey Certification Listings, current year.

1.04 QUALITY ASSURANCE

A. Firestopping materials shall conform to Flame (F) and Temperature (T) ratings as required by local building code and as tested by nationally accepted test agencies per ASTM 814, UL 1479 or UL 2079. The F rating must be a minimum of one (1) hour but not less than the fire resistance rating of the assembly being penetrated. T rating, when required by code authority, shall be based on the measurement of the temperature rise on the penetrating item(s). The fire test pressure differential of a minimum 0.01 inches of water column is required.

B. Fire stopping products shall be asbestos free, free of any PCBs and free of any lead.
C. Do not use any product containing solvents, or that require hazardous waste disposal.

1.05 SUBMITTALS

A. Submit manufacturer's product literature for each type of Firestop material to be installed. Literature shall indicate product characteristics, typical uses, performance, limitation criteria and test data.

B. Submit manufacturer's Warranty.
C. Material Safety Data Sheets: Submit MSDS for each firestop product.
D. Shop Drawings: Show typical installation details for methods of installation. Indicate which firestop materials will be used where and thickness for different hourly ratings.

1.06 PRODUCT DELIVERY, STORAGE AND HANDLING

A. Deliver materials in the manufacturers' original, unopened containers or packages with manufacturers' name, product identification, lot number, UL or Warnock Hersey labels, and mixing and installation instructions, as applicable.
B. Store materials in the original, unopened containers or packages, and under conditions recommended by manufacturer.
C. All firestop materials shall be installed prior to expiration of shelf life.

1.07 PROJECT CONDITIONS

A. Verify existing conditions and substrates before starting work.
B. Do not use materials that are based on organic solvents.
C. During installation, provide masking and drop cloths to prevent firestopping products from contaminating any adjacent surfaces.
D. Conform to ventilation requirements by manufacturer's installation instructions or Material Safety Data Sheet.
E. Weather Conditions: Do not proceed with installation of firestop products when temperatures are in excess of or below the manufacturer's recommendations.
F. Schedule installation of firestop products after completion of penetration item installation but prior to covering or concealing of openings.
G. Coordinate this work with work of other trades.

PART 2 - PRODUCTS

2.01 ACCEPTABLE MANUFACTURERS

A. Subject to compliance with requirements, provide products of one of the following manufacturers as shown below and further defined by the materials listed in Part 2.02 of this section.

1. The RectorSeal Corporation. Products as listed are a standard of generic types.
2. International Protective Coatings
3. 3M Company
4. Hilti

2.02 MATERIALS

A. Firestop Mortars:

1. Metacaulk Fire Rated Mortar by The RectorSeal Corporation
2. HILTI CP637 Firestop Mortar
3. 3M Firestop Mortar

B. Firestop Sealants and Caulks:

1. Metacaulk 950 by The RectorSeal Corporation
2. Metacaulk 835 by The RectorSeal Corporation
3. Metacaulk 805 by The RectorSeal Corporation
4. Metacaulk 1000 by The RectorSeal Corporation
5. CP 25WB+Caulk by 3M
6. Flame-Safe FS900 Series by International Protective Coatings.
7. HILTI FS-One Intumescent Firestop Sealant

C. Firestop Putty:

1. Metacaulk Fire Rated Putty by The RectorSeal Corporation
2. Metacaulk Fire Rated Putty pads by The RectorSeal Corporation
3. MPS-2 Moldable Putty Stix by 3M
4. MPP-4S Moldable Putty Pads by 3M
5. HILTI CP618 Firestop Putty

D. Firestop Sleeves:

1. Metacaulk Pipe Collars by The RectorSeal Corporation
2. Plastic Pipe Devices by 3M
3. HILTI CP6421643 Firestop Collar

E. Intumescent Wrap Strips:

1. Metacaulk Wrap Strip by The RectorSeal Corporation
2. FS-195 Wrap Strip by 3M
3. HILTI

F. Firestop Mastic:

1. Metacaulk 1100 by The RectorSeal Corporation
2. HILTI
3. 3M

G. Accessories:

1. Forming/Damming Materials: Mineral Fiberboard or other type recommended by manufacturer.
2. Primer, sealant and solvent cleaner: As recommended by firestop manufacturer.

H. Where subject to movement, firestop products used shall remain flexible to allow for such normal movement of building structure and penetrating item(s) without affecting the integrity of the firestop system.

PART 3 - EXECUTION

3.01 EXAMINATION

A. Examine the areas and conditions where firestops are to be installed and notify the Architect of conditions detrimental to proper and timely completion of the work.
B. Verify the penetrating item(s) are permanently installed and construction of fire rated assemblies are completed prior to firestop installation.
C. Prior to installation of firestop systems, clean surfaces of penetrating item(s) that will be in contact with firestop materials. Do not use any cleaning material that will either attack penetrating item(s) or firestop product to be installed.

3.02 CONDITIONS REQUIRING FIRESTOPPING

A. General:

1. Provide fire stopping for conditions specified whether or not firestopping is indicated, and, if indicated, whether such material is designated as insulation, safing or otherwise.
2. Insulation types specified in other Sections shall not be installed in lieu of firestopping material specified herein.

B. Penetrations:

1. Penetrations include conduit, cable, wire, or other elements which pass through one or both outer surfaces of a fire rated floor, wall, or partition.
2. Except for floors on grade, where a penetration occurs through a structural floor or roof and a space would otherwise remain open between the surfaces of the penetration and the edge of the adjoining structural floor or roof, provide firestopping to fill such spaces in accordance with ASTM E 814 (UL 1479).
3. These requirements for penetrations shall apply whether or not sleeves have been provided. Firestop the annular space between sleeve and surrounding surfaces.

C. Provide firestopping to fill miscellaneous voids and openings in fire rated construction in a manner essentially the same as specified herein before.

D. All junction boxes larger than 4' x 4" located in a rated wall shall be protected on sides and back of box with firestop putty pads as required to maintain integrity of rated wall.

3.03 INSTALLATION

A. Regulatory requirements: Install firestop products in accordance with fire rated test assemblies as published by either UL or Warnock Hersey or accordance with manufacturer engineer drawings.

B. Manufacturer's Instructions: Comply with manufacturer's instructions for installation of through-penetration firestop systems.

1. Firestop all holes or voids made in fire resistive assemblies, made by penetrations, to ensure against the passage of flames, smoke, and toxic gases.

2. Protect materials from damage on surface subjected to traffic and install cover plate as required on any installed firestop system that will or may be subject to traffic.
3. Tool surfaces of firestop products to provide a smooth and clean appearance.

3.04 FIELD QUALITY CONTROL

A. Follow safety procedures recommended in Material Safety Data Sheets.

B. Examine penetration firestopped areas to ensure proper installation before concealing or enclosing areas.

C. Keep areas of work accessible until inspection by Architect.

3.05 ADJUSTING AND CLEANING

A. Remove equipment, materials and debris, leaving areas in undamaged and clean conditions.

B. Neatly cut and trim materials.

END OF SECTION

SECTION 260190
ENGINE GENERATOR SET

1.01 GENERAL

A. Requirements contained in this Specification shall apply to and govern the work under this Section.

1.02 WORK INCLUDED

A. Provide labor and material necessary to install a standby diesel engine-generator set of the latest commercial type and design as specified herein.

1.03 SUBMITTALS

A. The Contractor shall furnish information showing manufacturers' model number, dimensions, and weights for the engine, generator, and major auxiliary equipment.

1.04 MANUFACTURERS

A. The following manufacturers meeting these specifications are acceptable:

1. Onan
2. Caterpillar/Olympian
3. Detroit Diesel/Williams
4. Kohler
5. Generac

1.05 SUBSTITUTIONS

A. Proposed deviations from the specifications shall be treated as follows:

1. Request for substitutions shall be made a minimum of ten (10) days prior to bid date. Manufacturers catalog data shall accompany each request and authorized acceptance shall be by addenda only.

2. Under no circumstances will assemblers of units be acceptable. To qualify as a manufacturer, the engine or alternator must be the

item manufactured and the completed engine generator set supplied by that manufacturer's authorized dealer only.

3. The Contractor shall submit copies of pertinent drawings and schematic diagrams for approval and shall include the following:

   a. Engine generator set including plans and elevations or riser views clearly indicating entrance points for each of the interconnections required.

   b. Engine generator/exciter control cubicle.

   c. Fuel consumption rate curves at various loads, ventilation and combustion CFM requirements.

   d. Exhaust mufflers and vibration isolators.

   e. Battery Charger, battery, and battery racks.

   f. Automatic load transfer switch.

   g. Actual electrical diagrams including schematic diagrams and interconnection wiring diagrams for all equipment to be provided.

   h. Legends for all devices on all diagrams.

   i. Sequence of operation explanations for all portions of all schematic wiring diagrams.

4. The specified standby KW shall be for continuous electrical service during interruption of the normal utility source and shall be certified to this effect by the manufacturer for the actual unit supplied.

5. These ratings must be substantiated by manufacturer's standard published curves. Special ratings or maximum ratings are not acceptable.

1.06 MATERIALS

A. Engine: The engine shall be 1800 RPM, water-cooled in line or Vee type four-stroke cycle compression ignition diesel. It shall meet specifications when operating on Number 2 domestic burner oil. Engines requiring premium fuels will not be considered. The engine shall be equipped with fuel, lube oil, and intake air filters, lube oil cooler, fuel transfer pump, fuel priming pump, engine driven water pump, and unit mounted instruments, water temperature gauge, lubrication oil pressure gauge, and battery charging ammeter.

1. Governor - A gear driven hydraulic governor shall maintain frequency regulation not to exceed 3% (1.8 hertz) from no load to full rated load.

2. Mounting - The units shall be mounted on a structural steel sub-base and shall be provided with suitable spring-type isolators.

3. Safety Devices - Safety shut-off for high water temperature, low oil pressure, over-speed, and engine over-crank shall be provided.

4. Guards - Guards shall be provided over all exposed moving parts as required by OSHA.

B. Generator:

1. The generator shall be rated for continuous stand-by service at 130 KW, 162 KVA at 0.8 power factor, 480/277 volts, three phase, four wire, 60 hertz, 1800 RPM.

2. The generator shall be a three phase, 60 hertz, single bearing, rotating field, synchronous type built to NEMA standards. A voltage regulator shall be provided to match the characteristics of the generator and engine. Voltage regulation shall be + - 2% from no load to full rated load. Readily accessible voltage drop, voltage level and voltage gain controls shall be provided. Voltage level adjustments shall be a minimum of + - 5%. Generator and exciter shall be inherently capable of parallel operation with other power sources of equivalent electrical characteristics, and stator shall include a twelve lead, re-connectable buss bar system for easy load connection.

C. Cooling System:

1. Radiator - A radiator with blower type fan shall be sized to maintain safe operation 110 degrees F ambient temperature. Air flow restriction from the radiator shall not exceed 0.5" HO.

2. The engine cooling system shall be pre-treated by the system supplier for the inhibition of internal corrosion, and freezing.

D. Fuel System:

1. An in-base fuel tank shall be supplied and installed by the manufacturer of the power system. The tank capacity shall be sized to operate generator at full rated load for 72 hours. Tank shall be constructed of "I" beams with a 3/16" floor plates and 10 gauge tank bottom. Tank shall incorporate 1/2" drain plugs on each end, 2" fill cap with locking provisions, level indicator, supply pipe and return pipe. Tank shall have access plate for mounting of fuel level alarm and tank inspections. Tank shall be dual wall construction provided with leak detection. Leak detection alarm status shall be shown on remote annunciator. At job completion, fuel tank shall be topped off and left full.

2. Tank shall be mounted to the skids of engine generator. Isolator pads shall be installed between pad and skid tank.

E. Weather Proof Housing and Exhaust Muffler;

1. Housing shall consist of a weather proof enclosure to completely enclose the engine generator and accessories. Housing shall protect the engine generator from the environment, yet be conductive to easy maintenance. Housing shall have removable swing out doors on each side and lockable rear door for access to meters and controls. Side doors shall have a means to pad lock. Construction of housing shall be aluminum and painted manufacturers standard color.

2. Exhaust muffler shall be mounted on top of housing. The exhaust muffler shall be a critical grade muffler. Muffler shall be factory installed so that its weight is not supported by the engine. A flexible exhaust fitting shall be supplied and installed between the muffler and exhaust manifold. All accessories shall be factory installed. This includes flanges, muffler, tail pipe and rain cap.

F. Automatic Starting System:

1. Starting Motor - A DC electric starting system with positive engagement shall be furnished. The motor voltage shall be as recommended by the engine manufacturer.

2. Automatic Control - fully automatic generator set start-stop controls in the generator control panel shall be provided. Controls shall provide shutdown for low oil pressure, high water temperature, over speed, over crank. Controls shall include a 30 second single cranking cycle limit with lockout.

3. Jacket Water Heater - A unit mounted thermal circulation type water heater incorporating a thermostatic switch shall be furnished to maintain engine jacket water to 70 degrees F. the heater shall be 120 volt, single phase, 60 hertz. Provide pressure switch actuated by oil pressure to shut down heater when oil pressure reaches running pressure.

4. Battery Charging Alternator - A belt driven battery charging alternator rated 24 volts, 35 amp DC shall be provided with transistorized voltage regulator.

5. Batteries - A lead - acid storage battery set of the heavy duty diesel starting type shall be provided. Battery voltage shall be compatible with the starting system. The battery set shall be rated no less than 220 amp-hours. Necessary cables and clamps shall be provided.

6. Battery Racks - Battery racks shall be provided for each battery and shall conform to NEC 480 - 7 (a) (1). They shall be constructed of metal and so treated as to be resistant to deteriorating action by battery electrolyte. Further, construction shall be such that non-conducting insulation material directly supports the cells.

7. Battery Charger - A current limiting battery charger shall be furnished to automatically recharge batteries. Chargers shall float at 2.17 volts per cell. It shall include overload protection, silicon diode full wave rectifiers, voltage surge suppressor, DC ammeter, DC volt- meter, and fused AC input. AC input voltage shall be 120

volts, single phase. Amperage output shall be no less than 6 amperes.

G. Generator Control Panel:

1. Type - A generator mounted NEMA 3R type vibration isolated aluminum control panel shall be provided. Panel shall contain, but not be limited to, the following equipment:

a. Frequency meter, 3 ½ inch, dial type.
b. Voltmeter, 3 ½ inch, 2% accuracy.
c. Ammeter, 3 ½ inch, 2 % accuracy.
d. Ammeter - Voltmeter phase selector switch.
e. Automatic starting controls as specified.
f. Voltage level adjustment rheostat.
g. Dry contacts for remote alarm wired to terminal strips.
h. Individual fault indicator lights for low oil pressure, high water temperature, over speed, and over crank.
i. Three position function switch marked, RUN-STOP and REMOTE.
j. Running time meter, oil pressure, battery charging ammeter, and water temperature gauges.

H. Main Line Circuit Breaker:

1. Type A main line, molded case circuit breaker mounted upon and sized to the output of the generator shall be installed as a load circuit interrupting and protection device. It shall operate both manually for normal switching functions and automatically during overload and short circuit conditions.

2. The trip unit for each pole shall have elements providing inverse time delay during overload conditions and instantaneous magnetic tripping for short circuit protection. The circuit breaker shall meet standards established by Underwriters Laboratories National Electric Manufacturer's Association, and National Electrical Code.

I. Automatic Load Transfer Switch:

1. The amperage rating of the automatic load transfer switch shall be 225 amps. Transfer switches shall be Nema 4X wall mounted.

2. Automatic transfer switch shall be mechanically held on both the emergency and the normal side, and rated for continuous duty in an unventilated enclosure. The switches shall be double throw with the main contacts rigidly and mechanically interlocked to insure only two possible positions: Normal or Emergency. A manual operator must be provided to enable manual operation.

3. Rating and Performance: The automatic load transfer control shall be rated for continuous duty when enclosed in a non-ventilated NEMA 4X enclosure. It shall be rated for all classes of load including inductive and non-inductive at 600 volts and tungsten lamp load at 250 volts. The transfer switch portion of the control shall be designed, built, and tested to close on an inrush current up to and including twenty (20) times the continuous rating of the switch without welding or excessive burning of the contacts. The transfer switch shall be capable of switching load up to and including fifteen (15) times the continuous rating of the switch and capable of enduring six thousand (6000) cycles of operation, at rated current, at a rate of six (6) cycles per minute, without failure. One cycle shall consist of one complete opening and closure of both sets of contacts on an inrush current of ten (10) times the continuous rating of the switch.

4. Transfer switch shall be listed under U.L. 1008, and approved by Canadian Standards Association. Switches utilizing reversing contactor mechanisms as a means to transfer load are disallowed and will not be considered.

5. Accessories to transfer switches; All automatic load transfer switches shall include the following accessories:

    a. Engine starting contacts to provide for generator starting from each unit independent of the other.

    b. Full phase protection. Three phase relays shall be field adjustable, close differential type with 92-95% pickup and 82-85% drop out. Relays are to be connected across live lines.

    c. Test switch, to simulate a power outage.

d. Adjustable time delay on engine starting to over-ride momentary outages and nuisance voltage dips.

e. Adjustable time delay on transfer of load to emergency source. Adjustable time delay to open transfer switch contact to allow motor loads to decay.

f. Adjustable time delay on retransfer to load to normal with 5 minute cool-down timer wherein the generator set runs unloaded after transfer to line.

g. Plant exerciser to start and run the generator set with or without load each 168 hours for a 30 minute interval. Selector switch will be provided for with load or without load testing.

h. One auxiliary contact closed on emergency and one auxiliary contact open on emergency.

i. Pilot lights to indicate the normal and emergency position of the transfer switch.

j. Isolated (ungrounded neutral bar).

k. Disconnect plug.

l. Time delay neutral, programmed transition, or in phase monitor.

J. Annunciator Panel: A flush recessed panel shall be provided for remote mounting as shown on the drawings to give audible and visual warning of fault or alarm conditions in the generator set. Wiring and conduit shall be as required by the system manufacturer. The panel shall conform with the requirements of the National Electrical Code, Section 700-12, and the National Fire Protection Associates publication, NFPA No. 110-3-5.5.1, Level One. Fuel tank leak detection status shall be indicated on the annunciator.

K. Transient voltage surge protection shall be provided protecting all low voltage circuits serving the transfer switch and the annunciator. EDCO or equal.

L. Provide one (1) remote emergency power off button. Provide Nema 4X enclosure for outdoor locations. Contractor to connect such to generator.

1.07 MANUFACTURING

A. The engine, including engine block, oil pan, and cylinder heads, generator and all major items of auxiliary equipment shall be manufactured in the U. S. by manufacturers currently engaged in the production of such equipment.

B. The unit shall be shipped to the job site by the manufacturer's authorized dealer having a parts and service facility within a 75 mile radius of the job site. In addition, and in order not to penalize the owner for unnecessary or prolonged periods of time for service or repairs to the emergency system, the bidding generator set supplier must have no less than eighty percent (80%) of all engine replacement parts in his stock at all times. Certified proof of this requirement shall be available from the dealer.

1.08 TESTING

A. Prior to acceptance of the installation, equipment shall be tested to show it is free of any defects and will start automatically and be subjected to full load test through the use of existing loads and, dry type load banks supplied for this purpose at the job site by the generator set supplier.

B. Load bank testing shall be done in the presence of the Owner's engineer or his appointed representative only after the unit is permanently installed in accordance with the plans and specifications. If testing is completed without benefit of Engineers presence, testing shall be done again in his presence. Testing shall be for a period of four (4) hours under full load.

C. Contractor shall supply all fuel necessary for load bank testing and shall before final acceptance of generator unit top off tank leaving it full.

1.09 CERTIFICATE TEST REPORTS, MANUALS AND INSTRUCTIONS

A. Prior to the final inspection, deliver 4 copies of the following items to the Engineer:

1. A certificate by the manufacturer of the engine-generator set that the auxiliary electrical power system has been properly installed, adjusted and tested.

2. Certified copies of all of the factory and construction site test data sheets and reports for the engine-generator set and major auxiliaries.

3. Complete operating and maintenance manuals for the engine-generator set and auxiliaries including wiring diagrams, technical data sheets and information for ordering replaceable parts:

   a. Include complete interconnection diagrams which indicate all components of the system.

   b. Include complete diagrams of the internal wiring for each of the items of equipment.

   c. The diagrams shall have their terminals identified to facilitate installation, operation and maintenance.

B. Laminate or mount under plexiglas a set of operating instructions for the system and install it under a neat frame, adjacent to transfer switch.

C. Provide signage, in accordance with section 26120, at main electrical service entrance equipment to indicate type and location of on-site emergency generator per N.E.C. 700.8(a).

D. Furnish the services of a competent, factory-trained engineer or technician for instructing operating and maintenance personnel on the proper operation and maintenance of the system at the time of testing.

1.10 SYSTEM SERVICE CONTRACT

A. The supplier of the standby power system shall provide a copy of and make available to the owner his standard service contract which, at the owner's option, may be accepted or refused. This contract will accompany any documents, drawings, catalog cuts, specification sheets,

wiring, or outline drawings, etc. Submitted for approval to the designing engineer. The contract shall be for the complete power system.

1.11 WARRANTY

A. The complete standby electrical system furnished under this Section shall be guaranteed against defective parts and workmanship under terms of the manufacturer's and dealer's standard warranty. But, in no event shall it be for a period of less than five (5) years or 3000 hours from date of final testing and acceptance of the system and shall include labor, parts and travel time for necessary repairs at the job site. Warranty information shall be submitted along with construction site test data sheets. This information shall list starting and ending dates and who is to be contacted for warranty service.

END OF SECTION

SECTION 260220
CONSTRUCTION REVIEWS INSPECTION AND TESTING

1.01 GENERAL

A. Comply with Division 1 - General Requirements.

1.02 CONSTRUCTION REVIEWS

A. The Engineer or his representative shall observe and review the installation of all electrical systems shown on the drawings and as specified herein.

B. Before covering or concealing any conduit below grade or slab, in wall or above ceiling, the contractor shall notify the Architect so that he can review the installation.

1.03 CONTRACTOR'S FINAL INSPECTION

A. At the time of the Contractor's final inspection, all systems shall be checked and tested for proper installation and operation by the Contractor in the presence of the Engineer or his representative.

B. The Contractor shall furnish the personnel, tools and equipment required to inspect and test all systems.

C. Following is a list of items that the contractor must demonstrate to the Architect or his representative as complying with the plans and specifications. Please note that this list does not necessarily represent all items to be covered in the final inspection, but should give the Contractor an idea of what is to be reviewed.

1. Service ground, show connection to ground rod and cold water main.

2. Demonstrate that main service equipment is properly bonded.

3. Demonstrate that all panels have breakers as specified, ground bar, copper bus, typed directory for circuit identification and that they are free of trash.

4. Demonstrate that all conduits are supported as required by the National Electrical Code.

5. Demonstrate that all outlet boxes above or on the ceiling are supported as required by the National Electrical Code.

6. Demonstrate that outlet boxes in wall or ceilings of combustible materials are flush with surface of wall or ceiling, and that outlet boxes in walls or ceilings of non-combustible materials are so installed that the front edge of the box or plaster ring is not set back more than 1/4".

7. Demonstrate that outlet boxes in wall are secure.

8. Demonstrate that all devices are properly secured to boxes, that device plates are properly aligned and are not being used to secure device.

9. Utilizing a Woodhead No. 1750 testing device, demonstrate that all 125 volt receptacles are properly connected.

10. Demonstrate that all fixtures have specified lamps, ballast and lens, and that they are supported as required by the National Electrical Code or as called for on the drawings or in the specifications.

11. Demonstrate that all disconnects requiring fuses are fused with the proper size and type, and that all disconnects are properly identified.

12. Demonstrate that Engine Generator Set is in proper working order and meeting all requirements outlined in specification.

13. Demonstrate that the Data/Voice Network Cabling System and SCADA/Controls System is in proper working order and meeting all requirements outlined in the specifications.

END OF SECTION

SECTION 260529
HANGERS AND SUPPORTS FOR ELECTRICAL SYSTEMS

PART 1 - GENERAL

1.1 SUMMARY

A. This Section includes the following:

1. Hangers and supports for electrical equipment and systems.
2. Construction requirements for concrete bases.

1.2 PERFORMANCE REQUIREMENTS

A. Design supports for multiple raceways capable of supporting combined weight of supported systems and its contents.

B. Design equipment supports capable of supporting combined operating weight of supported equipment and connected systems and components.

1.3 SUBMITTALS

A. Product Data: For each type of product including but not limited to:

1. Trapeze hangers. Include Product Data for components.
2. Steel slotted channel systems. Include Product Data for components.
3. Equipment supports.
4. Clamps.
5. Hangers.
6. Fasteners.
7. Anchors.
8. Brackets.

1.4 QUALITY ASSURANCE

A. Comply with NFPA 70.

1.5 COORDINATION

A. Coordinate size and location of concrete bases. Cast anchor-bolt inserts into bases. Concrete, reinforcement, and formwork requirements are specified in Division 3.

B. Coordinate installation of roof curbs, equipment supports, and roof penetrations.

PART 2 - PRODUCTS

2.1 SUPPORT, ANCHORAGE, AND ATTACHMENT COMPONENTS

A. Steel Slotted Support Systems: Comply with MFMA-4, factory-fabricated components for field assembly.

1. Manufacturers: Subject to compliance with requirements, provide products by one of the following:

a. Allied Tube & Conduit.
b. Cooper B-Line, Inc.; a division of Cooper Industries.
c. ERICO International Corporation.
d. GS Metals Corp.
e. Thomas & Betts Corporation.
f. Unistrut; Tyco International, Ltd.
g. Wesanco, Inc.

2. Painted Coatings: Manufacturer standard painted coating applied according to MFMA-4.
3. Channel Dimensions: Selected for applicable load criteria.

B. Raceway and Cable Supports: As described in NECA 1 and NECA 101.

C. Conduit and Cable Support Devices: Hangers, clamps, and associated fittings, designed for types and sizes of raceway or cable to be supported.

D. Support for Conductors in Vertical Conduit: Factory-fabricated assembly consisting of threaded body and insulating wedging plug or plugs for non-armored electrical conductors or cables in riser conduits. Plugs shall have number, size, and shape of conductor gripping pieces as required to suit individual conductors or cables supported. Body shall be malleable iron.

E. Structural Steel for Fabricated Supports and Restraints: ASTM A 36/A 36M, steel plates, shapes, and bars; black and galvanized.

F. Mounting, Anchoring, and Attachment Components: Items for fastening electrical items or their supports to building surfaces include the following:

1. Mechanical-Expansion Anchors: Insert-wedge-type, zinc-coated steel, for use in hardened portland cement concrete with tension, shear, and pullout capacities appropriate for supported loads and building materials in which used.

a. Manufacturers: Subject to compliance with requirements, provide products by one of the following:

1) Cooper B-Line, Inc.; a division of Cooper Industries.
2) Empire Tool and Manufacturing Co., Inc.
3) Hilti Inc.
4) ITW Ramset/Red Head; a division of Illinois Tool Works, Inc.
5) MKT Fastening, LLC.

2. Concrete Inserts: Steel or malleable-iron, slotted support system units similar to MSS Type 18; complying with MFMA-4 or MSS SP-58.
3. Clamps for Attachment to Steel Structural Elements: MSS SP-58, type suitable for attached structural element.
4. Through Bolts: Structural type, hex head, and high strength. Comply with ASTM A 325.
5. Toggle Bolts: All-steel springhead type.
6. Hanger Rods: Threaded steel.

2.2 FABRICATED METAL EQUIPMENT SUPPORT ASSEMBLIES

A. Description: Welded or bolted, structural-steel shapes, shop or field fabricated to fit dimensions of supported equipment.

B. Materials: Comply with requirements in Division 5 Section "Metal Fabrications" for steel shapes and plates.

PART 3 - EXECUTION

3.1 APPLICATION

A. Comply with NECA 1 and NECA 101 for application of hangers and supports for electrical equipment and systems except if requirements in this Section are stricter.

B. Maximum Support Spacing and Minimum Hanger Rod Size for Raceway: Space supports for EMT, and RMC as required by NFPA 70. Minimum rod size shall be 1/4 inch in diameter.

C. All hanger and support materials shall be suitable for the environment in which installed.

D. Multiple Raceways or Cables: Install trapeze-type supports fabricated with steel slotted support system, sized so capacity can be increased by at least 25 percent in future without exceeding specified design load limits.

1. Secure raceways and cables to these supports with single-bolt conduit clamps.

3.2 SUPPORT INSTALLATION

A. Comply with NECA 1 and NECA 101 for installation requirements except as specified in this Article.

B. Raceway Support Methods: In addition to methods described in NECA 1, EMT and RMC may be supported by openings through structure members, as permitted in NFPA 70.

C. Strength of Support Assemblies: Where not indicated, select sizes of components so strength will be adequate to carry present and future static loads within specified loading limits. Minimum static design load used for strength determination shall be weight of supported components plus 200 lb

D. Mounting and Anchorage of Surface-Mounted Equipment and Components: Anchor and fasten electrical items and their supports to building structural elements by the following methods unless otherwise indicated by code:

1. To Wood: Fasten with lag screws or through bolts.
2. To New Concrete: Bolt to concrete inserts.
3. To Masonry: Approved toggle-type bolts on hollow masonry units and expansion anchor fasteners on solid masonry units.
4. To Existing Concrete: Expansion anchor fasteners.
5. To Steel: Beam clamps (MSS Type 19, 21, 23, 25, or 27) complying with MSS SP-69 .
6. To Light Steel: Sheet metal screws.
7. Items Mounted on Hollow Walls and Nonstructural Building Surfaces: Mount cabinets, panelboards, disconnect switches, control enclosures, pull and junction boxes, transformers, and other devices on slotted-channel racks attached to substrate by means that meet anchorage requirements.

E. Drill holes for expansion anchors in concrete at locations and to depths that avoid reinforcing bars.

3.3 INSTALLATION OF FABRICATED METAL SUPPORTS

A. Comply with installation requirements in Division 5 Section "Metal Fabrications" for site-fabricated metal supports.

B. Cut, fit, and place miscellaneous metal supports accurately in location, alignment, and elevation to support and anchor electrical materials and equipment.

C. Field Welding: Comply with AWS D1.1/D1.1M.

3.4 CONCRETE BASES

A. Construct concrete bases of dimensions indicated but not less than 6 inches larger in both directions than supported unit, and so anchors will be a minimum of 10 bolt diameters from edge of the base.

B. Use 3000-psi 28-day compressive-strength concrete.

C. Anchor equipment to concrete base.

1. Place and secure anchorage devices. Use supported equipment manufacturer's setting drawings, templates, diagrams, instructions, and directions furnished with items to be embedded.
2. Install anchor bolts to elevations required for proper attachment to supported equipment.
3. Install anchor bolts according to anchor-bolt manufacturer's written instructions.

3.5 PAINTING

A. Touchup: Clean field welds and abraded areas of shop paint. Paint exposed areas immediately after erecting hangers and supports. Use same materials as used for shop painting. Comply with SSPC-PA 1 requirements for touching up field-painted surfaces.

1. Apply paint by brush or spray to provide minimum dry film thickness of 2.0 mils

END OF SECTION

SECTION 260544
SLEEVES AND SLEEVE SEALS FOR ELECTRICAL RACEWAYS AND CABLING

PART 1 - GENERAL

1.1 SUMMARY

A. Section Includes:

1. Sleeves for raceway and cable penetration of non-fire-rated construction walls and floors.
2. Grout.

B. Related Requirements:

1. Division 7 Section "Through-Penetration Firestop Systems" for penetration firestopping installed in fire-resistance-rated walls, horizontal assemblies, and smoke barriers, with and without penetrating items.

PART 2 - PRODUCTS

2.1 SLEEVES

A. Wall Sleeves:

1. Steel Pipe Sleeves: ASTM A 53/A 53M, Type E, Grade B, Schedule 40, zinc coated, plain ends.
2. Cast-Iron Pipe Sleeves: Cast or fabricated "wall pipe," equivalent to ductile-iron pressure pipe, with plain ends and integral waterstop unless otherwise indicated.

B. Sleeves for Conduits Penetrating Non-Fire-Rated Gypsum Board Assemblies: Galvanized-steel sheet; 0.0239-inch minimum thickness; round tube closed with welded longitudinal joint, with tabs for screw-fastening the sleeve to the board.

C. Sleeves for Rectangular Openings:

1. Material: Galvanized sheet steel.
2. Minimum Metal Thickness:

a. For sleeve cross-section rectangle perimeter less than 50 inches and with no side larger than 16 inches, thickness shall be 0.052 inch.

b. For sleeve cross-section rectangle perimeter 50 inches or more and one or more sides larger than 16 inches, thickness shall be 0.138 inch.

2.2 GROUT

A. Description: Nonshrink; recommended for interior and exterior sealing openings in non-fire-rated walls or floors.

B. Standard: ASTM C 1107/C 1107M, Grade B, post-hardening and volume-adjusting, dry, hydraulic-cement grout.

C. Design Mix: 5000-psi, 28-day compressive strength.

D. Packaging: Premixed and factory packaged.

PART 3 - EXECUTION

3.1 SLEEVE INSTALLATION FOR NON-FIRE-RATED ELECTRICAL PENETRATIONS

A. Comply with NECA 1.

B. Comply with NEMA VE 2 for cable tray and cable penetrations.

C. Sleeves for Conduits Penetrating Above-Grade Non-Fire-Rated Concrete and Masonry-Unit Floors and Walls:

1. Interior Penetrations of Non-Fire-Rated Walls and Floors:

a. Seal annular space between sleeve and raceway or cable, using joint sealant appropriate for size, depth, and location of joint. Comply with requirements in Division 7 Section "Joint Sealants."
b. Seal space outside of sleeves with mortar or grout. Pack sealing material solidly between sleeve and wall so no voids remain. Tool exposed surfaces smooth; protect material while curing.

2. Use pipe sleeves unless penetration arrangement requires rectangular sleeved opening.
3. Size pipe sleeves to provide 1/4-inch annular clear space between sleeve and raceway or cable unless sleeve seal is to be installed.
4. Install sleeves for wall penetrations unless core-drilled holes or formed openings are used. Install sleeves during erection of walls. Cut sleeves to length for mounting flush with both surfaces of walls. Deburr after cutting.

D. Sleeves for Conduits Penetrating Non-Fire-Rated Gypsum Board Assemblies:

1. Use circular metal sleeves unless penetration arrangement requires rectangular sleeved opening.
2. Seal space outside of sleeves with approved joint compound for gypsum board assemblies.

E. Roof-Penetration Sleeves: Seal penetration of individual raceways and cables with flexible boot-type flashing units applied in coordination with roofing work.

F. Aboveground, Exterior-Wall Penetrations: Seal penetrations using pipe sleeves and mechanical sleeve seals. Select sleeve size to allow for 1-inch annular clear space between pipe and sleeve for installing mechanical sleeve seals.

G. Underground, Exterior-Wall and Floor Penetrations: Install cast-iron pipe sleeves. Size sleeves to allow for 1-inch annular clear space between raceway or cable and sleeve for installing sleeve-seal system.

END OF SECTION

SECTION 260573
OVERCURRENT PROTECTIVE DEVICE COORDINATION STUDY

PART 1 - GENERAL

1.1 SUMMARY

A. Section includes computer-based, overcurrent protective device coordination studies to determine overcurrent protective devices and to determine overcurrent protective device settings for selective tripping.

1. Study results shall be used to determine coordination of series-rated devices.

1.2 ACTION SUBMITTALS

A. Product Data: For computer software program to be used for studies.

B. Other Action Submittals: Submit the following after the approval of system protective devices submittals.

1. Coordination-study input data, including completed computer program input data sheets.
2. Study and equipment evaluation reports.
3. Overcurrent protective device coordination study report; signed, dated, and sealed by a qualified professional engineer.

a. Submit study report for action prior to receiving final approval of the distribution equipment submittals. If formal completion of studies will cause delay in equipment manufacturing, obtain approval from Architect for preliminary submittal of sufficient study data to ensure that the selection of devices and associated characteristics is satisfactory.

1.3 INFORMATIONAL SUBMITTALS

A. Qualification Data: For Coordination Study Software Developer and Coordination Study Specialist.

B. Product Certificates: For overcurrent protective device coordination study software, certifying compliance with IEEE 399.

1.4 CLOSEOUT SUBMITTALS

A. Operation and Maintenance Data: For the overcurrent protective devices to include in emergency, operation, and maintenance manuals.

1. In addition to items specified in Section "Operation and Maintenance Data," include the following:

a. The following parts from the Protective Device Coordination Study Report:

1) One-line diagram.
2) Protective device coordination study.
3) Time-current coordination curves.

b. Power system data.

1.5 QUALITY ASSURANCE

A. Studies shall use computer programs that are distributed nationally and are in wide use. Software algorithms shall comply with requirements of standards and guides specified in this Section. Manual calculations are unacceptable.

B. Coordination Study Software Developer Qualifications: An entity that owns and markets computer software used for studies, having performed successful studies of similar magnitude on electrical distribution systems using similar devices.

1. The computer program shall be developed under the charge of a licensed professional engineer who holds IEEE Computer Society's Certified Software Development Professional certification.

C. Coordination Study Specialist Qualifications: Professional engineer in charge of performing the study and documenting recommendations, licensed in the state where Project is located. All elements of the study shall be performed under the direct supervision and control of this professional engineer.

D. Field Adjusting Agency Qualifications: An independent agency, with the experience and capability to adjust overcurrent devices and to conduct the testing indicated, that is a member company of the InterNational Electrical Testing Association or is a nationally recognized testing laboratory (NRTL) as defined by OSHA in 29 CFR 1910.7, and that is acceptable to authorities having jurisdiction.

PART 2 - PRODUCTS

2.1 COMPUTER SOFTWARE DEVELOPERS

A. Software Developers: Subject to compliance with requirements, available software developers offering software that may be used for the Work include, but are not limited to, the following:
   1. ETAP
   2. SKM Systems Analysis, Inc.

B. Comply with IEEE 242 and IEEE 399.

C. Analytical features of device coordination study computer software program shall have the capability to calculate "mandatory," "very desirable," and "desirable" features as listed in IEEE 399.

D. Computer software program shall be capable of plotting and diagramming time-current-characteristic curves as part of its output. Computer software program shall report device settings and ratings of all overcurrent protective devices and shall demonstrate selective coordination by computer-generated, time-current coordination plots.

   1. Optional Features:

      a. Arcing faults.
      b. Simultaneous faults.
      c. Explicit negative sequence.
      d. Mutual coupling in zero sequence.

2.2 PROTECTIVE DEVICE COORDINATION STUDY REPORT CONTENTS

A. Executive summary.

B. Study descriptions, purpose, basis and scope. Include case descriptions, definition of terms and guide for interpretation of the computer printout.

C. One-line diagram, showing the following:

   1. Protective device designations and ampere ratings.
   2. Cable size and lengths.
   3. Transformer kilovolt ampere (kVA) and voltage ratings.
   4. Motor and generator designations and kVA ratings.

5. Switchgear, switchboard, motor-control center, and panelboard designations.

D. Study Input Data: As described in "Power System Data" Article.

E. Short-Circuit Study:

1. Low-Voltage Fault Report: Three-phase and unbalanced fault calculations, showing the following for each overcurrent device location:

a. Voltage.
b. Calculated fault-current magnitude and angle.
c. Fault-point X/R ratio.
d. Equivalent impedance.

2. Momentary Duty Report: Three-phase and unbalanced fault calculations, showing the following for each overcurrent device location:

a. Voltage.
b. Calculated symmetrical fault-current magnitude and angle.
c. Fault-point X/R ratio.
d. Calculated asymmetrical fault currents:

1) Based on fault-point X/R ratio.
2) Based on calculated symmetrical value multiplied by 1.6.
3) Based on calculated symmetrical value multiplied by 2.7.

3. Interrupting Duty Report: Three-phase and unbalanced fault calculations, showing the following for each overcurrent device location:

a. Voltage.
b. Calculated symmetrical fault-current magnitude and angle.
c. Fault-point X/R ratio.
d. No AC Decrement (NACD) ratio.
e. Equivalent impedance.
f. Multiplying factors for 2-, 3-, 5-, and 8-cycle circuit breakers rated on a symmetrical basis.
g. Multiplying factors for 2-, 3-, 5-, and 8-cycle circuit breakers rated on a total basis.

F. Protective Device Coordination Study:

1. Report recommended settings of protective devices, ready to be applied in the field. Use manufacturer's data sheets for recording the recommended setting of overcurrent protective devices when available.

a. Phase and Ground Relays:

1) Device tag.
2) Relay current transformer ratio and tap, time dial, and instantaneous pickup value.
3) Recommendations on improved relaying systems, if applicable.

b. Circuit Breakers:

1) Adjustable pickups and time delays (long time, short time, ground).
2) Adjustable time-current characteristic.
3) Adjustable instantaneous pickup.
4) Recommendations on improved trip systems, if applicable.

c. Fuses: Show current rating, voltage, and class.

G. Time-Current Coordination Curves: Determine settings of overcurrent protective devices to achieve selective coordination. Graphically illustrate that adequate time separation exists between devices installed in series, including power utility company's upstream devices. Prepare separate sets of curves for the switching schemes and for emergency periods where the power source is local generation. Show the following information:

1. Device tag and title, one-line diagram with legend identifying the portion of the system covered.
2. Terminate device characteristic curves at a point reflecting maximum symmetrical or asymmetrical fault current to which the device is exposed.
3. Identify the device associated with each curve by manufacturer type, function, and, if applicable, tap, time delay, and instantaneous settings recommended.
4. Plot the following listed characteristic curves, as applicable:

a. Power utility's overcurrent protective device.
b. Medium-voltage equipment overcurrent relays.
c. Medium- and low-voltage fuses including manufacturer's minimum melt, total clearing, tolerance, and damage bands.
d. Low-voltage equipment circuit-breaker trip devices, including manufacturer's tolerance bands.
e. Transformer full-load current, magnetizing inrush current, and ANSI through-fault protection curves.
f. Cables and conductors damage curves.
g. Ground-fault protective devices.
h. Motor-starting characteristics and motor damage points.
i. Generator short-circuit decrement curve and generator damage point.

j. The largest feeder circuit breaker in each motor-control center and panelboard.

5. Series rating on equipment allows the application of two series interrupting devices for a condition where the available fault current is greater than the interrupting rating of the downstream equipment. Both devices share in the interruption of the fault and selectivity is sacrificed at high fault levels. Maintain selectivity for tripping currents caused by overloads.
6. Provide adequate time margins between device characteristics such that selective operation is achieved.
7. Comments and recommendations for system improvements.

PART 3 - EXECUTION

3.1 EXAMINATION

A. Examine Project overcurrent protective device submittals for compliance with electrical distribution system coordination requirements and other conditions affecting performance. Devices to be coordinated are indicated on Drawings.

1. Proceed with coordination study only after relevant equipment submittals have been assembled. Overcurrent protective devices that have not been submitted and approved prior to coordination study may not be used in study.

3.2 PROTECTIVE DEVICE COORDINATION STUDY

A. Comply with IEEE 242 for calculating short-circuit currents and determining coordination time intervals.

B. Comply with IEEE 399 for general study procedures.

C. The study shall be based on the device characteristics supplied by device manufacturer.

D. The extent of the electrical power system to be studied is indicated on Drawings.

E. Begin analysis at the service, extending down to the system overcurrent protective devices as follows:

1. To normal system low-voltage load buses where fault current is 10 kA or less.
2. Exclude equipment rated 240-V ac or less when supplied by a single transformer rated less than 125 kVA.

F. Study electrical distribution system from normal and alternate power sources throughout electrical distribution system for Project. Study all cases of system-switching configurations and alternate operations that could result in maximum fault conditions.

G. Transformer Primary Overcurrent Protective Devices:

1. Device shall not operate in response to the following:

a. Inrush current when first energized.
b. Self-cooled, full-load current or forced-air-cooled, full-load current, whichever is specified for that transformer.
c. Permissible transformer overloads according to IEEE C57.96 if required by unusual loading or emergency conditions.

2. Device settings shall protect transformers according to IEEE C57.12.00, for fault currents.

H. Motor Protection:

1. Select protection for low-voltage motors according to IEEE 242 and NFPA 70.
2. Select protection for motors served at voltages more than 600 V according to IEEE 620.

I. Conductor Protection: Protect cables against damage from fault currents according to ICEA P-32-382, ICEA P-45-482, and protection recommendations in IEEE 242. Demonstrate that equipment withstands the maximum short-circuit current for a time equivalent to the tripping time of the primary relay protection or total clearing time of the fuse. To determine temperatures that damage insulation, use curves from cable manufacturers or from listed standards indicating conductor size and short-circuit current.

J. Generator Protection: Select protection according to manufacturer's written recommendations and to IEEE 242.

K. The calculations shall include the ac fault-current decay from induction motors, synchronous motors, and asynchronous generators and shall apply to low- and medium-voltage, three-phase ac systems. The calculations shall also account for the fault-current dc decrement, to address the asymmetrical requirements of the interrupting equipment.

1. For grounded systems, provide a bolted line-to-ground fault-current study for areas as defined for the three-phase bolted fault short-circuit study.

L. Calculate short-circuit momentary and interrupting duties for a three-phase bolted fault and single line-to-ground fault at each of the following:

1. Electric utility's supply termination point.
2. Switchgear.
3. Unit substation primary and secondary terminals.
4. Low-voltage switchgear.
5. Motor-control centers.
6. Standby generators and automatic transfer switches.
7. Branch circuit panelboards.

M. Protective Device Evaluation:

1. Evaluate equipment and protective devices and compare to short-circuit ratings.
2. Adequacy of switchgear, motor-control centers, and panelboard bus bars to withstand short-circuit stresses.
3. Any application of series-rated devices shall be recertified, complying with requirements in NFPA 70.

3.3 LOAD-FLOW AND VOLTAGE-DROP STUDY

A. Perform a load-flow and voltage-drop study to determine the steady-state loading profile of the system. Analyze power system performance two times as follows:

1. Determine load-flow and voltage drop based on full-load currents obtained in "Power System Data" Article.
2. Determine load-flow and voltage drop based on 80 percent of the design capacity of the load buses.
3. Prepare the load-flow and voltage-drop analysis and report to show power system components that are overloaded, or might become overloaded; show bus voltages that are less than as prescribed by NFPA 70.

3.4 MOTOR-STARTING STUDY

A. Perform a motor-starting study to analyze the transient effect of the system's voltage profile during motor starting. Calculate significant motor-starting voltage profiles and analyze the effects of the motor starting on the power system stability.

B. Prepare the motor-starting study report, noting light flicker for limits proposed by IEEE 141, and voltage sags so as not to affect the operation of other utilization equipment on the system supplying the motor.

3.5 POWER SYSTEM DATA

A. Obtain all data necessary for the conduct of the overcurrent protective device study.

1. Verify completeness of data supplied in the one-line diagram on Drawings. Call discrepancies to the attention of Architect.
2. For new equipment, use characteristics submitted under the provisions of action submittals and information submittals for this Project.
3. For existing equipment, whether or not relocated obtain required electrical distribution system data by field investigation and surveys, conducted by qualified technicians and engineers. The qualifications of technicians and engineers shall be qualified as defined by NFPA 70E.

B. Gather and tabulate the following input data to support coordination study. The list below is a guide. Comply with recommendations in IEEE 241 and IEEE 551 for the amount of detail required to be acquired in the field. Field data gathering shall be under the direct supervision and control of the engineer in charge of performing the study, and shall be by the engineer or its representative who holds NETA ETT Level III certification or NICET Electrical Power Testing Level III certification.

1. Product Data for overcurrent protective devices specified in other Sections and involved in overcurrent protective device coordination studies. Use equipment designation tags that are consistent with electrical distribution system diagrams, overcurrent protective device submittals, input and output data, and recommended device settings.
2. Electrical power utility impedance at the service.
3. Power sources and ties.
4. Short-circuit current at each system bus, three phase and line-to-ground.
5. Full-load current of all loads.
6. Voltage level at each bus.
7. For transformers, include kVA, primary and secondary voltages, connection type, impedance, X/R ratio, taps measured in percent, and phase shift.
8. For reactors, provide manufacturer and model designation, voltage rating, and impedance.
9. For circuit breakers and fuses, provide manufacturer and model designation. List type of breaker, type of trip and available range of settings, SCCR, current rating, and breaker settings.
10. Generator short-circuit current contribution data, including short-circuit reactance, rated kVA, rated voltage, and X/R ratio.
11. For relays, provide manufacturer and model designation, current transformer ratios, potential transformer ratios, and relay settings.
12. Maximum demands from service meters.

13. Busway manufacturer and model designation, current rating, impedance, lengths, and conductor material.
14. Motor horsepower and NEMA MG 1 code letter designation.
15. Low-voltage cable sizes, lengths, number, conductor material, and conduit material (magnetic or nonmagnetic).
16. Medium-voltage cable sizes, lengths, conductor material, and cable construction and metallic shield performance parameters.
17. Data sheets to supplement electrical distribution system diagram, cross-referenced with tag numbers on diagram, showing the following:

    a. Special load considerations, including starting inrush currents and frequent starting and stopping.
    b. Transformer characteristics, including primary protective device, magnetic inrush current, and overload capability.
    c. Motor full-load current, locked rotor current, service factor, starting time, type of start, and thermal-damage curve.
    d. Generator thermal-damage curve.
    e. Ratings, types, and settings of utility company's overcurrent protective devices.
    f. Special overcurrent protective device settings or types stipulated by utility company.
    g. Time-current-characteristic curves of devices indicated to be coordinated.
    h. Manufacturer, frame size, interrupting rating in amperes rms symmetrical, ampere or current sensor rating, long-time adjustment range, short-time adjustment range, and instantaneous adjustment range for circuit breakers.
    i. Manufacturer and type, ampere-tap adjustment range, time-delay adjustment range, instantaneous attachment adjustment range, and current transformer ratio for overcurrent relays.
    j. Panelboards, switchboards, motor-control center ampacity, and SCCR in amperes rms symmetrical.
    k. Identify series-rated interrupting devices for a condition where the available fault current is greater than the interrupting rating of the downstream equipment. Obtain device data details to allow verification that series application of these devices complies with NFPA 70 and UL 489 requirements.

3.6 FIELD ADJUSTING

A. Adjust relay and protective device settings according to the recommended settings provided by the coordination study. Field adjustments shall be completed by the engineering service division of the equipment manufacturer under the Startup and Acceptance Testing contract portion.

B. Make minor modifications to equipment as required to accomplish compliance with short-circuit and protective device coordination studies.

C. Testing and adjusting shall be by a full-time employee of the Field Adjusting Agency, who holds NETA ETT Level III certification or NICET Electrical Power Testing Level III certification.

1. Perform each visual and mechanical inspection and electrical test stated in NETA Acceptance Testing Specification. Certify compliance with test parameters. Perform NETA tests and inspections for all adjustable overcurrent protective devices.

3.7 DEMONSTRATION

A. Engage the Coordination Study Specialist to train Owner's maintenance personnel in the following:

1. Acquaint personnel in the fundamentals of operating the power system in normal and emergency modes.
2. Hand-out and explain the objectives of the coordination study, study descriptions, purpose, basis, and scope. Include case descriptions, definition of terms, and guide for interpreting the time-current coordination curves.
3. Adjust, operate, and maintain overcurrent protective device settings.

END OF SECTION

SECTION 262213
LOW-VOLTAGE DISTRIBUTION TRANSFORMERS

PART 1 - GENERAL

1.1 SUMMARY

A. Section Includes:

1. Distribution, dry-type transformers with nominal primary and secondary rating of 600 V and less, with capacities up to 1500 kVA.

1.2 ACTION SUBMITTALS

A. Product Data:

1. For each type of product.

a. Include construction details, material descriptions, dimensions of individual components and profiles, and finishes for each type and size of transformer.
b. Include rated nameplate data, capacities, weights, dimensions, minimum clearances, installed devices and features, and performance for each type and size of transformer.

B. Shop Drawings:

1. Detail equipment assemblies and indicate dimensions, weights, loads, required clearances, method of field assembly, components, and location and size of field connections.
2. Vibration Isolation Base Details: Detail fabrication including anchorages and attachments to structure and to supported equipment.
3. Include diagrams for power, signal, and control wiring.

C. Field Quality-Control Submittals:

1. Field quality-control reports.

1.3 DELIVERY, STORAGE, AND HANDLING

A. Inspection: On receipt, inspect for and note shipping damage to packaging and transformer.

1. If manufacturer packaging is removed for inspection, and transformer will be stored after inspection, re-package transformer using original or new packaging materials that provide protection equivalent to manufacturer's packaging.

B. Storage: Store in warm, dry, and temperature-stable location in original shipping packaging.

C. Temporary Heating: Apply temporary heat in accordance with manufacturer's published instructions within enclosure of ventilated-type units, throughout periods during which equipment is not energized and when transformer is not in space that is continuously under normal control of temperature and humidity.

D. Handling: Follow manufacturer's instructions for lifting and transporting transformers.

PART 2 - PRODUCTS

2.1 MANUFACTURERS

A. Manufacturers: Subject to compliance with requirements, provide products by the following:
1. Square D; Schneider Electric USA.

B. Source Limitations: Obtain each type of transformer from single source from single manufacturer.

2.2 GENERAL TRANSFORMER REQUIREMENTS

A. Description: Factory-assembled and -tested, air-cooled units for 60 Hz service.

B. Electrical Components, Devices, and Accessories: Listed and labeled in accordance with NFPA 70, by qualified electrical testing laboratory recognized by authorities having jurisdiction, and marked for intended location and application.

C. Transformers Rated 15 kVA and Larger:

1. Comply with 10 CFR 431 (DOE 2016) efficiency levels.

2. Marked as compliant with DOE 2016 efficiency levels by qualified electrical testing laboratory recognized by authorities having jurisdiction.

2.3 DISTRIBUTION TRANSFORMERS

A. Comply with NFPA 70, and list and label as complying with UL 1561.

B. Cores: Electrical grade, non-aging silicon steel with high permeability and low hysteresis losses.

1. One leg per phase.
2. Core volume must allow efficient transformer operation at 10 percent above nominal tap voltage.
3. Grounded to enclosure.

C. Coils: Continuous windings without splices except for taps.

1. Coil Material: Aluminum.
2. Internal Coil Connections: Brazed or pressure type.
3. Terminal Connections: Bolted.

D. Encapsulation: Transformers smaller than 30 kVA must have core and coils completely resin encapsulated.

E. Enclosure: Ventilated.

1. Core and coil must be encapsulated within resin compound using vacuum-pressure impregnation process to seal out moisture and air.
2. KVA Ratings: Based on convection cooling only and not relying on auxiliary fans.
3. Wiring Compartment: Sized for conduit entry and wiring installation.
4. Environmental Protection:

    a. Indoor: UL 50E, Type 2.
    b. Outdoor: UL 50E, Type 3R.

5. Finish Color: Gray weather-resistant enamel.

F. Taps for Transformers 3 kVA and Smaller: None.

G. Taps for Transformers 7.5 to 24 kVA: One 5 percent tap above and one 5 percent tap below normal full capacity.

H. Taps for Transformers 25 kVA and Larger: Two 2.5 percent taps above and two 2.5 percent taps below normal full capacity.

I. Insulation Class, Smaller Than 30 kVA: 180 deg C, UL-component-recognized insulation system with maximum of 115 deg C rise above 40 deg C ambient temperature.

J. Insulation Class, 30 kVA and Larger: 220 deg C, UL-component-recognized insulation system with maximum of 150 deg C rise above 40 deg C ambient temperature.

K. Grounding: Provide ground-bar kit or ground bar installed on inside of transformer enclosure.

L. K-Factor Rating: Transformers indicated to be K-factor rated must comply with UL 1561 requirements for nonsinusoidal load current-handling capability to degree defined by designated K-factor.

1. Unit may not overheat when carrying full-load current with harmonic distortion corresponding to designated K-factor, without exceeding indicated insulation class in 40 deg C maximum ambient and 24-hour average ambient of 30 deg C.
2. Indicate value of K-factor on transformer nameplate.
3. Unit must comply with requirements of DOE 2016 efficiency levels when tested in accordance with NEMA TP 2 with K-factor equal to one.

M. Electrostatic Shielding: Windings must have independent, single, full-width copper electrostatic shield arranged to minimize interwinding capacitance.

1. Arrange coil leads and terminal strips to minimize capacitive coupling between input and output terminals.
2. Include special terminal for grounding shield.

N. Neutral: Rated 200 percent of full load current for K-factor-rated transformers.

O. Wall Brackets: Manufacturer's standard brackets.

P. Low-Sound-Level Requirements: Maximum sound levels when factory tested in accordance with IEEE C57.12.91, as follows:

1. 9.00 kVA and Less: 40 dB(A-weighted).
2. 9.01 to 30.00 kVA: 45 dB(A-weighted).
3. 30.01 to 50.00 kVA: 45 dB(A-weighted) for K-factors of 1, 4, and 9.
4. 50.01 to 150.00 kVA: 50 dB(A-weighted) for K-factors of 1, 4, and 9.

2.4 IDENTIFICATION

A. Nameplates:

1. Engraved, laminated-acrylic or melamine plastic signs for distribution transformers, mounted with corrosion-resistant screws. Nameplates and label products are specified in Section 26 05 53 "Identification for Electrical Systems."

2.5 SOURCE QUALITY CONTROL

A. Testing Administrant: Engage qualified electrical testing agency to evaluate transformer.

B. Factory Tests and Inspections: Test and inspect assembled system, by, or under supervision of, qualified electrical testing laboratory recognized by authorities having jurisdiction, in accordance with IEEE C57.12.01 and IEEE C57.12.91 before delivering to site. Affix label with name and date of manufacturer's certification of system compliance on control units.

1. Resistance measurements of windings at rated voltage connections and at tap connections.
2. Ratio tests at rated voltage connections and at tap connections.
3. Phase relation and polarity tests at rated voltage connections.
4. No load losses, and excitation current and rated voltage at rated voltage connections.
5. Impedance and load losses at rated current and rated frequency at rated voltage connections.
6. Applied and induced tensile tests.
7. Regulation and efficiency at rated load and voltage.
8. Insulation-Resistance Tests:
    a. Line-side to ground.
    b. Load-side to ground.
    c. Line-side to load-side.
9. Temperature tests.
10. Factory Sound-Level Tests: Conduct sound-level tests on equipment for this Project.

C. Nonconforming Work:

1. System equipment that does not pass tests and inspections will be considered defective.

D. Prepare test and inspection reports.

PART 3 - EXECUTION

3.1 EXAMINATION

A. Examine conditions for compliance with enclosure- and ambient-temperature requirements for transformers.

B. Verify that field measurements are as needed to maintain working clearances required by NFPA 70 and manufacturer's published instructions.

C. Examine walls, floors, roofs, and concrete bases for suitable mounting conditions where transformers will be installed.

D. Verify that ground connections are in place and requirements in Section 26 05 26 "Grounding and Bonding for Electrical Systems" have been met. Maximum ground resistance must be 5 Ω at location of transformer.

E. Environment: Enclosures must be rated for environment in which they are located. Covers for UL 50E, Type 4X enclosures may not cause accessibility problems.

F. Proceed with installation only after unsatisfactory conditions have been corrected.

3.2 INSTALLATION

A. Install wall-mounted transformers level and plumb with wall brackets fabricated by transformer manufacturer.

1. Coordinate installation of wall-mounted and structure-hanging supports with actual transformer provided.

B. Construct concrete bases and anchor floor-mounted transformers in accordance with manufacturer's published instructions and requirements in Section 26 05 29 "Hangers and Supports for Electrical Systems."

1. Coordinate size and location of concrete bases with actual transformer provided. Cast anchor-bolt inserts into bases. Concrete, reinforcement, and formwork requirements are specified with concrete.

C. Secure transformer to concrete base in accordance with manufacturer's published instructions.

D. Secure covers to enclosure and tighten bolts to manufacturer-recommended torques to reduce noise generation.

E. Remove shipping bolts, blocking, and wedges.

3.3 CONNECTIONS

A. Ground equipment in accordance with Section 26 05 26 "Grounding and Bonding for Electrical Systems."

B. Connect wiring in accordance with Section 26 05 19 "Low-Voltage Electrical Power Conductors and Cables."

C. Tighten electrical connectors and terminals in accordance with manufacturer's published torque-tightening values. If manufacturer's torque values are not indicated, use those specified in UL 486A-486B.

D. Provide flexible connections at conduit and conductor terminations and supports to eliminate sound and vibration transmission to building structure.

3.4 FIELD QUALITY CONTROL

A. Field tests and inspections must be witnessed by Architect .

B. Tests and Inspections:

1. Small (Up to 167 kVA Single-Phase or 500 kVA Three-Phase) Dry-Type Transformer Field Tests:

a. Visual and Mechanical Inspection.

1) Inspect physical and mechanical condition.
2) Inspect anchorage, alignment, and grounding.
3) Verify that resilient mounts are free and that shipping brackets have been removed.
4) Verify that unit is clean.
5) Perform specific inspections and mechanical tests recommended by manufacturer.
6) Verify that as-left tap connections are as specified.
7) Verify presence of surge arresters and that their ratings are as specified.

b. Electrical Tests:

1) Measure resistance at windings, taps, and bolted connections.

2) Perform insulation-resistance tests winding-to-winding and windings-to-ground. Apply voltage in accordance with manufacturer's published data. In absence of manufacturer's published data, comply with NETA ATS, Table 100.5. Calculate polarization index: value of index may not be less than 1.0.
3) Perform turns-ratio tests at tap positions. Test results may not deviate by more than one-half percent from either adjacent coils or calculated ratio. If test fails, replace transformer.
4) Verify correct secondary voltage, phase-to-phase and phase-to-neutral, after energization and prior to loading.

C. Test Labeling: On completion of satisfactory testing of units, attach dated and signed "Satisfactory Test" label to tested components.

D. Nonconforming Work:

1. Transformer will be considered defective if it does not pass tests and inspections.
2. Remove and replace units that do not pass tests or inspections and retest as specified above.

E. Assemble and submit test and inspection reports.

F. Manufacturer Services:

1. Engage factory-authorized service representative to support field tests and inspections.

3.5 ADJUSTING

A. Record transformer secondary voltage at unit for at least 48 hours of typical occupancy period. Adjust transformer taps to provide optimum voltage conditions at secondary terminals. Optimum is defined as not exceeding nameplate voltage plus 5 percent and not being lower than nameplate voltage minus 3 percent at maximum load conditions. Submit recording and tap settings as test results.

B. Output Settings Report: Prepare written report recording output voltages and tap settings.

3.6 CLEANING

A. Vacuum dirt and debris; do not use compressed air to assist in cleaning.

3.7 MAINTENANCE

A. Infrared Scanning: Two months after Substantial Completion, perform infrared scan of transformer connections.

1. Use infrared-scanning device designed to measure temperature or detect significant deviations from normal values. Provide documentation of device calibration.
2. Perform two follow-up infrared scans of transformers, one at four months and another at 11 months after Substantial Completion.
3. Prepare certified report identifying transformer checked and describing results of scanning. Include notation of deficiencies detected, remedial actions taken, and scanning observations after remedial action.

END OF SECTION

*DISTURBED AREA CALCULATIONS:

PROJECT SITE: 2.14 AC
TOTAL DISTURBED AREA: 1.06 AC

DISTURBED AREA (OFF SITE): 0.14 AC
DISTURBED AREA (ON SITE): 0.92 AC
DISTURBED AREA = 0.92 AC / 2.14 AC = 43% OF PROJECT SITE
< 50% GOOD

IMPERVIOUS AREA = 1400 SF -> 0.032 AC / 1.06 AC = 3.0%

<50% GOOD
<15% GOOD

PR. DIG PIT
EX. 6" PVC WATER LINE (OWNED BY CITY OF GAINESVILLE)
CUT, CAP, & ABANDON EX. 2" WATER LINE IN PLACE GDOT APPROVAL #U-139-012970-1
STATE ROUTE 13 (100' RIGHT-OF-WAY)
PR. LAUNCHING PIT
EX. 2" PVC WATER LINE (OWNED BY CITY OF FLOWERY BRANCH)
CONNECT TO EX. LINE W/ 2" TAPPING SLEEVE, 2"x4" RJ DI REDUCER, 4" RJ DI BENDS, & 4" GATE VALVE W/ BOX & COVER
4" RJ DIP WATER MAIN INSTALLED VIA HORIZONTAL DIRECTIONAL DRILL GDOT APPROVAL #U-139-012970-1
STATE ROUTE 13 (100' RIGHT-OF-WAY)
EX. 6" HIGH PRESSURE STL. GAS MAIN
8" RJ DI 90° BEND
OPEN CUT PAVEMENT (SEE PAVEMENT PATCH DETAIL ON SHEET 9.0)
POTHOLE AND VERIFY IF EX. WATER LINE IS ACTIVE
MATCHLINE - SEE SHEET 4.1
EX. 10" RECLAIM WATER
RAILROAD AVENUE
4" RJ DI 45° BEND
PR. RECEIVING PIT
PR. FIRE HYDRANT ASSEMBLY (INCL. 8"x6" RJ DI TEE, 6" RJ GATE VALVE, & 6" RJ DI LEAD PIPE)
EX. FIBER OPTIC LINE
EX. 1.25" GAS LINE
10' LANDSCAPING BUFFER
COORDINATE WITH GA POWER TO RELOCATE EX. GUY WIRES
CONTRACTOR SHALL RUN/STUB-OUT 2.5" PVC CONDUIT FROM EX. POWER POLE TO PR. METERING POINT AT BLDG.
EX. 2" WATER
PR. DIG PIT
8" RJ DI 45° BEND
PR. 4" DIP
HENDERSON WELL
PR. DIESEL GENERATOR ON CONC. SLAB PER DETAIL (SEE SHEET C9.4)
PR. 8" RJ DI TEE W/ 8"x4" RJ DI REDUCER
PR. 8" RJ GATE VALVE W/ BOX & COVER
POTHOLE AND VERIFY IF EX. WATER LINE IS ACTIVE
SEE BUILDING PIPING PLAN FOR CONTINUATION
PR. 4" WATER
EX. ABANDONED WELL
WATERSTONE WELL
CO-1 RIM:1121.37 INV:1110.50
PR. 8" DIP
72.33' of 4" @ 4.15%
CO-2 RIM:1122.01 INV:1113.50
8" RJ DI 45° BEND
PR. 8" WATER
61.88' of 4" @ 4.31%
PR. 8" RJ DI TEE
UNDG. POWER TO WELLS (TYP.)
10' BUILDING SETBACK
AREA 2.141 ACRES
PARCEL ID: 08098 001001, 08098 001002 08098 001003, 08098 001004
CITY OF FLOWERY BRANCH GEORGIA
DEED BOOK 9253, PAGE 463
PLAT BOOK 876, PAGE 1
*LIMITS OF DISTURBANCE
0.92 AC (ON-SITE)
0.14 AC (OFF-SITE)
±1.06 AC (TOTAL)
75' IMPERVIOUS BUFFER
Ø48" ISOLATED MANHOLE FOR CHEMICAL SPILL CONTAINMENT - ANY SPILLS TO BE REMOVED BY VACUUM TRUCK. THIS MH IS NOT CONNECTED TO THE SANITARY SEWER SYSTEM.
PR. 8" WATER
8" RJ DI 45° BEND
PR. RECEIVING PIT
EXISTING SS MH RIM:1113.61
INV IN: 1106.75 4"
INV IN: 1104.00 12"
INV OUT: 1103.93 12"
50' STREAM BUFFER
25' STREAM BUFFER
EX. 20' SEWER EASEMENT
EX. WETLANDS (APPROX.)
EX. 12" SAN. SEWER
EX. WETLANDS (APPROX.)
EX. STREAM CENTERLINE
30' BUILDING SETBACK
PR. HORIZONTAL DIRECTIONAL DRILL ±130 LF 8" HDPE DR-11 (DIPS) WATER MAIN. PROVIDE RESTRAINED HDPExMJ TRANSITION COUPLINGS ON EITHER END TO CONTINUE PIPE MATERIAL AS DUCTILE.
PERMANENT UTILITY EASEMENT
CONTRACTOR SHALL REMOVE EX. EVERGREEN SHRUBS, VEGETATION, AND CREPE MYRTLE TREE & PROVIDE REPLACEMENT OF ALL LANDSCAPING TO MATCH EXISTING.
PR. CONNECTION TO EX. WATER MAIN W/ 8"x6" RJ DI REDUCER, RJ DI BENDS, AND 6" TAPPING SLEEVE & VALVE
PR. LAUNCHING PIT
8" RJ DI 90° BEND
EX. FIRE HYDRANT
TEMPORARY CONSTRUCTION EASEMENT
PARCEL ID: 08098A000206
WATER STONE CROSSING COMMUNITY ASSOC INC
DEED BOOK 4312, PAGE 80
PLAT BOOK 816, PAGE 154A
EX. 6" WATER LINE
PARCEL ID: 08098 A000206
WATER STONE CROSSING COMMUNITY ASSOCIATION
4611 BEACON RIDGE LANE
FLOWERY BRANCH, GA 30542
15.52 ACRES
PARCEL ID: 08098 01009
KOSWIRE INC.
4600 CANTRELL ROAD
FLOWERY BRANCH, GA 30542
26.72 ACRES
EX. UNDG. POWER
EX. FIBER OPTIC LINE
EX. IRRIGATION WATER LINE
EX. STONE FENCE POST (TYP.)
VIREO DR
10' BUILDING SETBACK
10' LANDSCAPING BUFFER
EX. 10" RECLAIM WATER
18" RCP IE:1118.84
18" RCP IE:1111.93
15" RCP IE:1117.34
15" RCP IE:1118.06
96" CMP IE:1107.85
96" CMP IE:1107.73
96" CMP IE:1108.39
96" CMP IE:1108.52
18" CMP IE:1116.56
SSMH TOP: 1117.09 IE: 1106.33 8" PVC IE: 1104.93 12" PVC IE: 1104.92 12" PVC
SSMH TOP: 1120.41 IE: 1105.24 12" PVC IE: 1105.20 12" PVC
SSMH TOP: 1116.13 IE: 1103.71 12" PVC IE: 1103.35 12" PVC
SWCB TOP: 1122.40 IE: 1116.80 18" CMP
SSMH TOP: 1122.27 IE: 1107.85 8" PVC
DWCB TOP: 1119.00 IE: 1114.12 18" RCP
DWCB TOP: 1119.29 IE: 1113.91 18" RCP IE: 1113.85 18" CMP
DWCB TOP: 1119.37
1" PIF W/ 1/2" RB CAP
1" PIF (6.25' S OF PK)
1/2" RB W/ CAP

KEYED NOTE:

① PIPE INSTALLED BEYOND BACKFLOW VAULT TO BE PAID FOR VIA LINEAR FOOT LINE ITEMS - NOT TO BE INCLUDED UNDER LUMP SUM WELL SITE IMPROVEMENTS ITEM.

UTILITY NOTES:

1. THE CONTRACTOR SHALL PROVIDE 72 HOUR NOTICE TO THE UTILITIES PROTECTION CENTER PRIOR TO CONSTRUCTION COMMENCEMENT OR EXCAVATION. THE CONTRACTOR SHALL PROVIDE ADEQUATE PROTECTION FOR ALL EXISTING UTILITIES WITHIN THE CONSTRUCTION AREA AND REPAIR ANY UTILITIES DAMAGED DURING CONSTRUCTION AT NO COST TO THE OWNER.
2. THE CONTRACTOR SHALL FIELD VERIFY LOCATION AND SIZE OF ALL EXISTING UTILITIES WITHIN THE PROJECT AREA. THE CONTRACTOR SHALL COORDINATE WITH UTILITY OWNERS ON ALL CONFLICTS.
3. THE CONTRACTOR SHALL VERIFY ALL DIMENSIONS AND LOCATIONS OF PROPOSED UTILITIES AND COORDINATE WITH ALL APPLICABLE PLANS FOR THE PROJECT. THE CONTRACTOR SHALL BE RESPONSIBLE FOR PROPER PLACEMENT AND FIT OF ALL PROPOSED UTILITIES. IF ANY DISCREPANCIES ARE DISCOVERED, NOTIFY THE ENGINEER IN WRITING WITHIN 24 HOURS.
4. TEN (10') FOOT HORIZONTAL & EIGHTEEN (18") INCH VERTICAL SEPARATION SHALL BE MAINTAINED BETWEEN ALL PROPOSED POTABLE WATER MAINS AND SANITARY SEWER MAINS.
5. FOUR (4') FOOT MINIMUM COVER SHALL BE MAINTAINED ABOVE ALL PROPOSED WATER MAINS AND SERVICE CONNECTIONS.
6. ALL SANITARY SEWER CONSTRUCTION SHALL COMPLY WITH ALL LOCAL STANDARDS AND SPECIFICATIONS.
7. THE CONTRACTOR SHALL ADJUST THE TOPS OF ALL EXISTING AND PROPOSED UTILITY STRUCTURES TO MATCH FINAL GRADE ELEVATIONS.
8. SEE MEP DESIGN SHEETS FOR EXACT PLACEMENT OF SPECIFIED UTILITIES.
9. ALL PROPOSED WATER MAIN PIPE & FITTINGS SHALL HAVE RESTRAINED JOINTS AND HAVE CONC. THRUST BLOCKING INSTALLED.

GRAPHIC SCALE 1" = 20'

GEORGIA811 www.Georgia811.com

ESG ENGINEERING
6400 Peake Rd
Macon, GA 31210
Ph: (478) 474-4996
Fax: (478) 474-5045

GROUNDWATER WELLS #4 & #5

FOR THE CITY OF FLOWERY BRANCH

REVISIONS

NO.	DESCRIPTION	DATE
1	ESPC SHEETS	11-7-25
2	BID SET OF PLANS	12-1-25
3	REVISED WITH CITY COMMENTS	12-5-25
4	ADDENDUM #1	12-8-25
5	ADDENDUM #2	12-11-25

BID SET

GEORGIA REGISTERED No. PE046341 PROFESSIONAL ENGINEER ANDREW D SWICEGOOD

DRAWN BY: DSC
CHECKED BY: ADS
DATE: OCT 2025
SCALE: SEE SCALE

CONTENT:

CIVIL:
UTILITY PLAN

SHEET NO: 2 3 5

C4.0

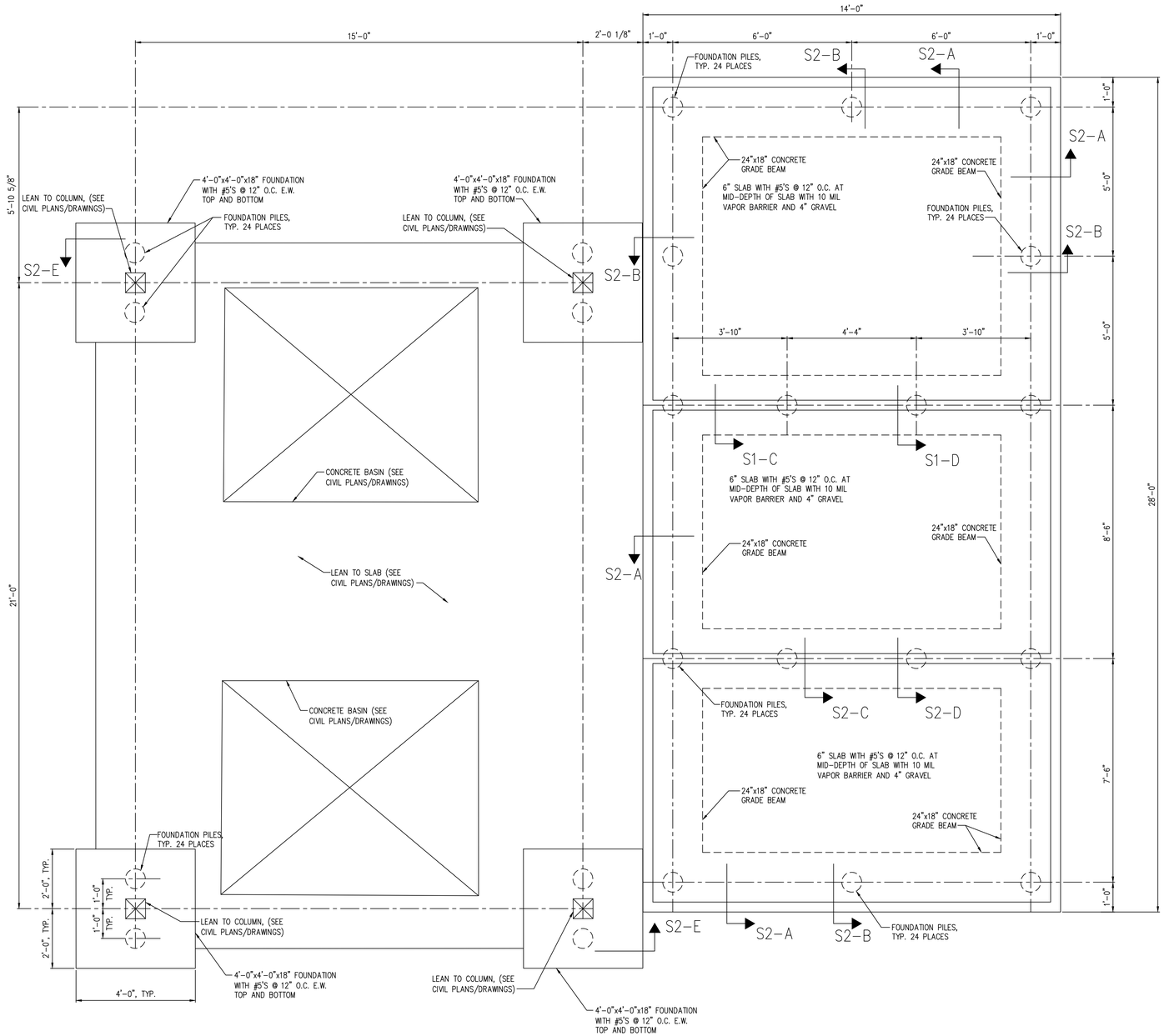

FOUNDATION PLAN

NO SCALE

NOTE: COORDINATE BUILDING ANCHORAGE REQUIREMENTS WITH MANUFACTURER'S DRAWINGS

REINFORCED CONCRETE GENERAL NOTES

1. ALL CONCRETE WORK SHALL CONFORM TO ACI 301, "SPECIFICATIONS FOR STRUCTURAL CONCRETE FOR BUILDINGS". DESIGN IS BASED ON ACI 318, "BUILDING CODE REQUIREMENTS FOR STRUCTURAL CONCRETE."
2. CONCRETE SHALL BE NORMAL WEIGHT (150 PCF) AND SHALL DEVELOP A MINIMUM COMPRESSIVE STRENGTH OF 4500 PSI AT 28 DAYS.
3. SUBMIT CONCRETE MIX DESIGNS FOR REVIEW, IN ACCORDANCE WITH ACI 318 TO THE EOR AND TESTING AGENCY.
4. THE PROPOSED MATERIALS AND MIX DESIGN SHALL BE FULLY DOCUMENTED AND REVIEWED. RESPONSIBILITY FOR OBTAINING THE REQUIRED DESIGN STRENGTH IS THE CONTRACTOR'S.
5. USE OF CALCIUM CHLORIDE, CHLORIDE IONS, OR OTHER SALTS IN CONCRETE IS NOT PERMITTED.
6. THE AIR CONTENT AT THE POINT OF PLACEMENT SHALL BE PER ACI 318 TABLE 4.2.1 FOR MODERATE EXPOSURE.
7. THE TESTING AGENCY SHALL SAMPLE AND TEST EACH 100 CU. YARDS OR FRACTION THEREOF OF EACH CLASS OF CONCRETE PLACED EACH DAY. SAMPLE CONCRETE IN ACCORDANCE WITH ASTM C172. PERFORM THE FOLLOWING TESTS IN ACCORDANCE WITH THE INDICATED STANDARD:

   SLUMP: ASTM C143

   AIR CONTENT: ASTM C231 (NORMAL WEIGHT CONCRETE) ASTM C173 (LIGHT WEIGHT CONCRETE)

   COMPRESSIVE STRENGTH: ASTM C39, WITH ONE CYLINDER AT 7 DAYS, 2 CYLINDERS AT 28 DAYS, AND ONE SPECIMEN HELD IN RESERVE.

   CONCRETE TEMPERATURE: ASTM C1064

   UNIT WEIGHT: ASTM C567
8. MOIST CURE CONCRETE WITH MOISTURE PROTECTIVE COVER FOR A MINIMUM OF 7 DAYS. CURING COMPOUNDS PERMITTED IF COMPATIBLE WITH ANY PLANNED FLOOR FINISHES
9. REINFORCING STEEL SHALL CONFORM TO ASTM A615, GRADE 60, UNLESS NOTED OTHERWISE.
10. TIE ALL REINFORCING STEEL AND EMBEDMENTS SECURELY IN PLACE PRIOR TO PLACING CONCRETE. PROVIDE SUFFICIENT SUPPORTS TO MAINTAIN THE POSITION OF REINFORCEMENT WITHIN SPECIFIED TOLERANCES DURING ALL CONSTRUCTION ACTIVITIES. "STICKING" DOWELS INTO WET CONCRETE IS NOT PERMITTED.
11. REINFORCING STEEL SHALL HAVE THE FOLLOWING CONCRETE COVER UNLESS NOTED OTHERWISE:

    CONCRETE CAST AGAINST EARTH (NOT FORMED): 3"

    FORMED CONCRETE EXPOSED TO EARTH OR WEATHER
    #6 BARS THROUGH #12 BARS 2"
    #5 BARS AND SMALLER 2"

    CONCRETE NOT EXPOSED TO EARTH OR WEATHER
    SLABS AND WALLS 1"
12. DO NOT WELD OR TACK WELD REINFORCING STEEL UNLESS APPROVED OR DIRECTED BY THE STRUCTURAL ENGINEER.

SOIL PARAMETERS

1. SOIL PARAMETERS
   A. SHALLOW FOUNDATIONS WERE ASSUMED TO BE INSUFFICIENT TO SUPPORT BUILDING DUE TO POOR SOIL CONDITIONS. DEEP FOUNDATION ELEMENTS ARE REQUIRED TO SUPPORT THE BUILDING.
   B. RECOMMENDATION IS BASED ON THE FOLLOWING SOILS REPORT:
      DRINKING WATER SITE
      GEOTECHNICAL ENGINEERING REPORT
      TERRACON PROJECT NO. HN255025
      DATED APRIL 3, 2025
2. IF SITE CONDITIONS DIFFER FROM THOSE INDICATED, THE DESIGN PROFESSIONAL SHALL BE NOTIFIED IMMEDIATELY.
3. ALL FOUNDATION WORK SHALL BE DONE 'IN THE DRY'.

GENERAL NOTES

1. DESIGN LOADS
   A. BUILDING LOAD ..... 120,000 LBS.
   B. SLAB LIVE LOAD ..... 100 PSF
   C. ROOF LIVE LOAD ..... 20 PSF
2. CODES:
   A. INTERNATIONAL BUILDING CODE, 2018 ED. WITH LATEST GEORGIA AMENDMENTS.
   B. REINFORCED CONCRETE: ACI 318-14.
3. FOUNDATION DESIGN ASSUMES ALL INTERIOR WALLS ARE LOAD BEARING AND BUILDING WEIGHT IS UNIFORMLY DISTRIBUTED TO FOUNDATION.
4. SHOP DRAWINGS GENERAL NOTES: THE PLANS, SECTIONS, AND DETAILS PROVIDED AS PART OF THE CONTRACT DOCUMENTS SHALL NOT BE USED IN A REPRODUCIBLE FORM AS PART OF THE SHOP DRAWINGS. ALL FABRICATORS & SUPPLIERS SHALL ANTICIPATE THAT REVISIONS TO SUBMITTALS MAY BE REQUIRED. THIS INCLUDES MODIFICATIONS TO DETAILS THAT ARE CHANGED FOR COORDINATION PURPOSES. NO ADDITIONAL FEES ARE PERMITTED FOR REVISING SUBMITTALS FOR WORK DESCRIBED IN THE CONTRACT DOCUMENTS.
5. CONTRACTOR TO FIELD VERIFY ALL DIMENSIONS AND ELEVATIONS BEFORE BEGINNING CONSTRUCTION.
6. SEE ESG DRAWINGS AND SPECIFICATIONS FOR REQUIREMENTS ON FLOOR AND WALL COATINGS

FOUNDATION PILE NOTES (PER UNIT)

1. IT IS THE INTENT OF THIS CONTRACT REQUIREMENT TO PROVIDE:
   A. VERTICAL FOUNDATION PILES (24 TOTAL) OF SIZE AND DETAIL THAT WILL ACHIEVE NOT LESS THAN 50,000 POUNDS ULTIMATE (25,000 POUNDS WORKING) COMPRESSION CAPACITY, AND 10,000 POUNDS ULTIMATE (5,000 POUNDS WORKING) TENSION CAPACITY, BEFORE FAILURE.
2. INSTALLATION OF PILES IS TO BE PERFORMED BY A PILE CONTRACTOR APPROVED BY THE OWNER.
3. MINIMUM VERTICAL PILE LENGTH SHALL BE 28 FEET REGARDLESS OF FIELD DETERMINED EXCESS CAPABILITY, EXCEPT THAT, IF DURING CONSTRUCTION PROGRESS, IT IS DETERMINED THAT ANY EXCESSIVE CAPACITY ACHIEVED DURING INSTALLATION IS CAUSING DELAYS OR UNDUE HARDSHIP, THE OWNER RESERVES THE RIGHT TO WAIVE THIS REQUIREMENT (BUT NOT BELOW SPECIFIED ULTIMATE CAPACITY) WITH APPROPRIATE CONTRACT AND CONTRACT PRICE CHANGES AGREED UPON BY OWNER AND CONTRACTOR.
4. PILE CONTRACTOR SHALL HAVE ALL REASONABLE ACCESS TO THE SITE, BOTH BEFORE AND AFTER SUCCESSFUL BIDDING, BUT SCHEDULING SHALL BE COORDINATED WITH THE EOR/OWNER. ALL INSURANCE, SAFETY, LEGAL, AND OTHER AGREED UPON REQUIREMENTS SHALL BE MET BY THE PILE CONTRACTOR BEFORE PERFORMING ANY WORK. IT SHALL BE THE RESPONSIBILITY OF THE PILE CONTRACTOR TO REVIEW THE SITE TO THEIR SATISFACTION PRIOR TO BIDDING. NO CONTRACT CHANGES ARE PERMISSIBLE BECAUSE OF LACK OF KNOWLEDGE OF REASONABLY ACCESSIBLE FEATURES ON THE SITE.
5. SOIL TEST REPORTS ARE INCLUDED IN THE BID PACKAGE. ANY INFERENCE DRAWN FROM THE REPORT, EXCEPT WHERE THE REPORT MIGHT BE FOUND ERRONEOUS, SHALL BE THE RESPONSIBILITY OF THE PILE CONTRACTOR.
6. DESIGN OF ALL PILE COMPONENTS TO MEET REQUIREMENTS SHALL BE PERFORMED BY A PROFESSIONAL ENGINEER REGISTERED IN THE STATE OF GEORGIA, EITHER EMPLOYED BY, OR RETAINED BY THE CONTRACTOR, WHO IS QUALIFIED AND EXPERIENCED IN THE EVALUATION OF THE PILE SYSTEM. SIGNED AND SEALED CALCULATIONS SHALL BE PROVIDED TO THE EOR/OWNER FOR REVIEW. CALCULATIONS SHALL INCLUDE AN ANALYSIS OF THE PILE FOR BUCKLING.
7. PILE CONTRACTOR SHALL PROVIDE WITH THEIR BID A RESUME OF JOBS OF SIMILAR DETAIL AND QUANTITY THAT THEY HAVE PERFORMED.
8. WORK SHALL BE PERFORMED IN AN ORDERLY AND WORKMANLIKE FASHION. SCHEDULING SHALL BE MAINTAINED. PILES SHALL BE LOCATED WITHIN APPROXIMATELY 3" OF THEIR SHOWN LOCATION, AND SHALL BE BATTERED AS SHOWN. PILE CONTRACTOR SHALL PROVIDE ALL LABOR AND MATERIALS AS REQUIRED AND SHALL HAVE A FULL-TIME SUPERINTENDENT ON SITE FOR THE DURATION OF CONSTRUCTION. DAILY RECORDS SHALL BE MADE AND MAINTAINED ON SITE. RECORDS SHALL BE MADE AVAILABLE TO EOR UPON REQUEST. RECORDS SHALL INCLUDE PILE DEPTH TORQUE LOG AND ESTIMATED CAPACITY.
9. AT THE END OF EACH WORK DAY, THE AREA AROUND THE FOUNDATION SITE SHALL BE LEFT IN A CONDITION THAT WILL NOT INTERFERE WITH OTHER TRADES OR THAT WILL NOT POSE A DANGER TO OTHERS ON SITE.
10. CONTRACTOR SHALL PROPOSE AN ALTERNATIVE ADDITIVE TEST PILE PROGRAM AT THE BEGINNING OF THE PROJECT. THE PROGRAM SHALL CONFIRM THE PILE DESIGN MEETS THE REQUIRED COMPRESSION AND TENSION CAPACITY. TESTING SHALL BE OBSERVED BY THE OWNER AND/OR THE OWNER'S REPRESENTATIVE.

NO.	DESCRIPTION	DATE	BY
1	LEAN TO ADDITION	12.10.25	MNE
0	ISSUED FOR CONSTRUCTION	12.4.25	MNE

GEORGIA REGISTERED No. PEF003052 STRUCTURAL MATTHEW N. ELLIS ENGINEER

12.4.25
Pi-Tech, Inc. COA#PEF003000
COA Expiration: 6.30.2026

DRAWN BY: PEJ
CHECKED BY: MNE
DATE: 12.4.2025
SCALE: AS SHOWN

PI-TECH, INC.
115 FOREST HILL RD
MACON, GA 31210
478.743.5600
www.pi-techinc.com

FLOWERY BRANCH CHEM. BUILDING
FOR
ESG ENGINEERING
MACON, GA

SHEET NO. S1
SHEET 1 OF 2

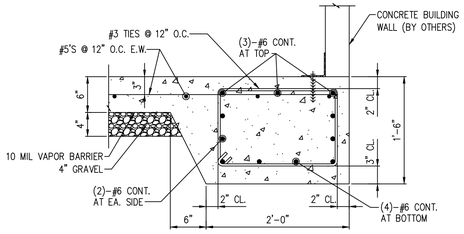

S2-A

NO SCALE

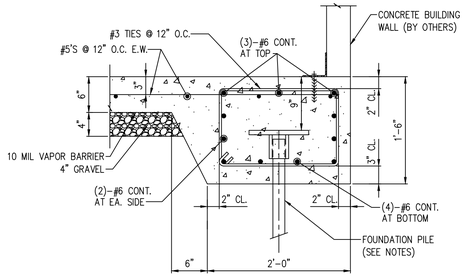

S2-B

NO SCALE

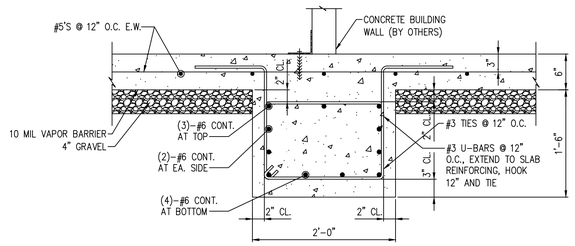

S2-C

NO SCALE

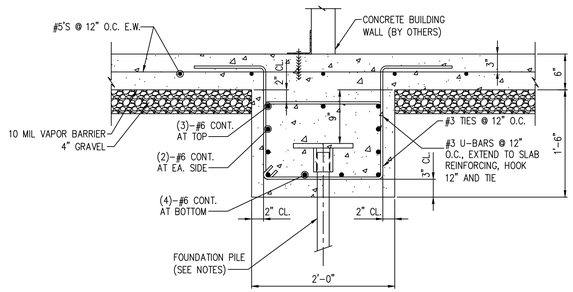

S2-D

NO SCALE

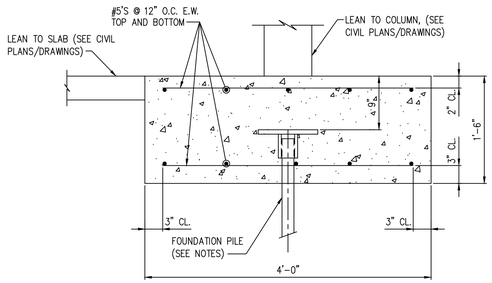

S2-E

NO SCALE

NO.	DESCRIPTION	DATE	BY
1	LEAN TO ADDITION	12.10.25	MNE
0	ISSUED FOR CONSTRUCTION	12.4.25	MNE

GEORGIA REGISTERED No. SE000062 STRUCTURAL ENGINEER MATTHEW N. ELLIS
12.4.25
Pi-Tech, Inc. COA#PEF003000
COA Expiration: 6.30.2026

DRAWN BY: PEJ
CHECKED BY: MNE
DATE: 12.4.2025
SCALE: AS SHOWN

PI-TECH, INC.
115 FOREST HILL RD
MACON, GA 31210
478.743.5600
www.pi-techinc.com

FLOWERY BRANCH CHEM. BUILDING
FOR
ESG ENGINEERING
MACON, GA

SHEET NO. S2
SHEET 2 OF 2

MECHANICAL SPECIFICATIONS

1) Provide all heating, ventilation and air conditioning items indicated on the drawings, described in this specification or required for a complete and proper installation.

2) Comply with all pertinent codes, ordinances and regulations. Refer to website for Dept. of Community Affairs for current Codes Editions.

3) The contractor shall not attempt to precisely scale dimensions from these drawings to obtain construction dimensions and clearances. The contractor shall verify all actual dimensions and clearances. Although these plans are diagrammatic in nature, they shall be followed as closely as site conditions, new construction, and work by other trades shall permit. Deviations from these drawings, which are required to conform to the available space or the actual building construction, shall be made at no additional cost to the owner.

4) Furnish without extra charge, any additional material and labor required to comply with the above codes and standards, even though the work may not be described in the contract documents. Where the requirements of the contract documents exceed the requirements of the above codes and standards, the contract documents shall take precedence.

5) All equipment and material shall be new and of first quality. Equipment and material shall be the same or equal to the basis of design listed on these drawings and shall be UL listed.

6) Cooperate and coordinate with other trades in order that all systems in the work may be installed in the best arrangement.

7) Examine the areas and conditions under which work of this section will be installed. Correct conditions detrimental to the proper and timely completion of the work. Notify Architect of any discrepancies. Do not proceed until unsatisfactory conditions have been corrected.

8) Avoid interference with structure, and with work of other trades. Install all equipment per manufacturer's instructions. Install accessible parts, including equipment, coils, valves, dampers, controls, and filters with adequate clearance for inspection, adjustments, repair and replacement.

9) All other materials not specifically described but required for a complete and proper installation shall be as selected by the contractor subject to acceptance by the Engineer.

10) All ductwork shall be fabricated from galvanized sheet metal duct and conform to SMACNA "HVAC Duct Construction Standards–Metal and Flexible. Seal all joints in ductwork with mastic sealant.

11) Refrigerant piping shall conform to manufacturer's recommendations and installation instructions. Refrigerant piping shall be ASTM B280 Type ACR or ASTM B88 Type L drawn copper tubing with wrought copper fittings. Insulate suction line with ½" thick flexible foamed plastic cellular foam (Armaflex or equivalent). All piping shall be adequately supported. Insulation installed outdoors shall be painted with two coats of Armacell WB coating or equivalent. Refrigerant pipes shall be installed in accordance with ASHRAE standard 15–2022 section 9.12 and shall be tested in accordance with ASHRAE standard 15–2022 section 9.13. Contractor shall issue a letter to design team stating that refrigerant pipes has been installed and tested under the referenced sections. Contractor shall refer to ASHRAE standard 15–2022 sections 9.10 and 9.11 for additional information regarding refrigerant piping. Penetration of refrigerant pipes shall be protected with a through penetration protection means. The through penetration protection shall be the same or higher rating than the assembly.

12) Thermostats: Provide 24 volt, programmable 24–hour, 7–day thermostat to control heating stages in sequence with delay between stages and supply fan to maintain temperature setting. For Heat Pumps include system selection switch heat–off–cool and fan control switch (auto–on), emergency heat switch (auxiliary/emergency heat indicator lights).

13) Provide fire and smoke rated flexible connections between fans and ducts. Material shall comply with NFPA 90A requirements for material in supply air stream.

14) Install all equipment in accordance with manufacturer's instructions and recommendations including clearances recommended for proper operation or service. All filters and serviceable parts shall be readily accessible.

15) Do not cut into or reduce the size of any structural member without the permission of the Architect.

16) Provide weather–proof flashing at all duct and pipe penetrations through the building walls and roof. As a minimum, flashings shall be designed and installed in accordance with SMACNA standards. Flashings shall be guaranteed weatherproof.

17) Support all HVAC units, ductwork, piping and other appurtenances from structure, provide vibration isolation at all fans which are not internally isolated. Provide hanger rod with built in rubber–in–shear isolator. Between drain pan and unit provide 4 each rubber–in–shear isolator. Do not attach vibration isolator to drain pan. Do not screw or drive fasteners into non–structural components such as roof decks or non–load bearing walls.

18) Thoroughly clean all components and remove all dirt, scale, oil, and other foreign substances. Provide clean air filters for all equipment.

19) Perform all tests necessary to demonstrate the integrity of the complete installation to the approval of the Engineer and all other authorities having jurisdiction. Make all adjustments necessary and balance the completed system in accordance with the data shown. Balance the systems in accordance with NEBB or AABC standards. Acceptable tolerances shall be minus ten percent to plus five percent of all measurements. Balancing shall be done by an independent licensed (by NEBB or AABC) TAB contractor. Make the following tests and submit reports to the Architect:
   a) Airflow rate at each supply, return and exhaust outlet or inlet.
   b) Total airflow rate and total static pressure for each supply and exhaust fan. Test exhaust fans with room doors closed.
   c) Motor speed, for multiple speed fans (e.g. high, medium, low).
   d) For direct drive fans, provide speed settings and actual rpm, including ECM motor driven fans
   e) Provide fan and motor rpm for belt driven fans. Provide sheave sizes.
   f) Outside airflow rate to each HVAC unit and supply fan.
   g) Motor current (and compare with nameplate data) at all motors.
   h) Entering and leaving air dry–bulb and wet–bulb conditions at all cooling coils.
   i) Heat output capacity for unit heaters, heating devices and coils (kW or MBH).
   j) Manufacturer, model and serial number for each piece of HVAC equipment scheduled on drawings.
   k) Calibrate thermostats to be within one degree of actual temperature at thermostat.
   l) Verify that all HVAC devices operate as scheduled or indicated (i.e. ON–OFF, 2–stage, variable output (SCR heaters), etc.

20) The entire system shall be warranted for a period of one (1) year beginning with Owner's acceptance of the work. Compressors shall include a minimum of five (5) year parts only warranty from the manufacturer. All labor and materials necessary to repair or replace the system or portions thereof, during that time shall be warranted for a period of one (1) year from the repair of replacement.

21) Up Blast fan (direct drive): Side wall mounted exhaust fans shall be upblast centrifugal direct drive type. The fan wheel shall be centrifugal backward inclined, constructed of aluminum and shall include a wheel cone carefully matched to the inlet cone for precise running tolerances. Wheels shall be statically and dynamically balanced. The fan housing shall be constructed of heave gauge aluminum with a rigid internal support structure. Wind bands shall have a rolled bead for added strength and shall be joined to curb caps with a leak–proof, continuously welded seam. Motors shall be mounted out of the airstream on vibration isolators. Fresh air for motor cooling shall be drawn into the motor compartment from an area free of discharge contaminants. Motors shall be readily accessible for maintenance. A disconnect switch shall be factory installed and wired from the fan motor to a junction box within the motor compartment. A conduit chase shall be provided through the curb cap to the motor compartment for ease of electrical wiring. All fans shall bear the AMCA Certified Ratings Seal for sound and air performance. Each fan shall bear a permanently affixed manufacturer's nameplate containing the model number and individual serial number for future identification. Refer to schedule for further requirement.

22) Louvers: 4" deep, 12 gauge (0.081) etched and 30–minute clear anodized extruded aluminum, drainable blades and frame; back mounted 1/2" mesh 19–gauge screen; flange frame. Louver shall be rated for no water carry–through at 900 face velocity, 0.15" maximum pressure drop for 4–foot square sample tested according to AMCA Standard 500, 1973.

23) SUBMITTALS AND SUBMITTAL PROCEDURES:
   a. Contractor shall review the submittal data and check for the purpose of compliance with safety requirements, verification of dimensions, contract documents and methods and means prior to submitting to design professional. Contractor shall indicate approval by indicating such on the submittal.
   b. Transmit each submittal electronically in PDF format.
   c. Sequentially number submittal files and transmittal form. Revise submittals with original number and a sequential alphabetic suffix. File names shall describe item included in file.
   d. Identify Project, the Contractor, Subcontractor or supplier; pertinent drawing and detail number, and specification section number, as appropriate on each copy. Each file shall include an index of items included in file.
   e. Apply the Contractor's stamp, signed or initialed certifying that review, approval, verification of Products required, field dimensions, adjacent construction Work, and coordination of information is in accordance with the requirements of the Work and Contract Documents.
   f. Submittal data for all items in project shall be submitted at one time. Submittal shall be divided into groups with file sizes not exceeding 6 MB. If there is unavailable data such as control submittal, etc., these may be submitted later if not doing so would delay project progress. Data shall include capacities, complete installation instructions, dimensional data and electrical data, BHP, motor HP, operating weights and load distribution at mounting points.
   g. Deliver submittals electronically to the Design Professional.
   h. Schedule submittals to expedite the Project, and coordinate submission of related items.
   i. For each submittal for review, allow 15 days excluding delivery time to and from the Contractor.
   j. Identify variations from Contract Documents and Product or system limitations that may be detrimental to successful performance of the completed Work.
   k. Provide space for the Contractor and the Architect/ review stamps.
   l. When revised for resubmission, identify all changes made since previous submission.
   m. Distribute copies of reviewed submittals as appropriate. Instruct parties to promptly report any inability to comply with requirements.
   n. Submittals not requested will not be recognized or processed.
   o. Provide files containing only related items (such as piping, equipment, air distribution, etc.)

24) Instruct Owner's representative in the operation of the systems, using the operation and maintenance manual as a teaching aid.

25) Provide an operation and maintenance manual. As a minimum, the manual shall contain:
   a. A complete list of all equipment and appurtenances with equipment designations (per Drawings), manufacturers, and catalog numbers.
   b. Copies of manufacturers' brochures and instructions for operation and maintenance of all mechanical equipment, including replacement parts lists.
   c. Typed system operation and maintenance instructions, including inspection, lubrication, and service instructions and schedules.
   d. List of names, addresses and phone numbers of distributors of all equipment and appurtenances.
   e. Manufacturers' warranties.

26) Indoor, direct–expansion, wall–mounted fan coil unit (ACU). Unit shall be complete with cooling/heating coil, fan, fan motor, piping connectors, electrical controls, microprocessor control system, and integral temperature sensing. Unit shall be furnished with integral wall mounting bracket and mounting hardware. Cabinet discharge and inlet grilles shall be attractively styled, high–impact polystyrene. Cabinet shall be fully insulated for improved thermal and acoustic performance. Fan shall be tangential direct–drive blower type with air intake at the top of the unit and discharge at the bottom front. Automatic, motor–driven vertical air sweep shall be provided standard. Air sweep operation shall be user selectable. The vertical sweep may be adjusted (using the remote control) and the horizontal air direction may be set manually. Coil shall be copper tube with aluminum fins and galvanized steel tube sheets. Fins shall be bonded to the tubes by mechanical expansion and golden hydrophilic pre–coated. A drip pan under the coil shall have a drain connection for hose attachment to remove condensate. Condensate pan shall have internal trap. Motors shall be open drip–proof, permanently lubricated ball bearing with inherent overload protection. Fan motors shall be 4–speed. Controls shall consist of a microprocessor–based control system which shall control space temperature, determine optimum fan speed, and run self–diagnostics. The temperature control range shall be from 62F to 86F (17C to 30C) in increments of 1F or 1C, and have 46F Heating Mode (Heating Setback). The wireless or wired remote controller shall have the ability to act as the temperature sensing location for room comfort. Refer to schedule for preference on wired or wireless thermostat. The unit shall have the following functions as a minimum: An automatic restart after power failure at the same operating conditions as at failure. A timer functions to provide a minimum 24–hour timer cycle for system Auto Start/Stop. Temperature–sensing controls shall sense return air temperature. Indoor coil freeze protection. Wireless infrared remote control and/or wired remote control as scheduled to enter set points and operating conditions. Automatic air sweep control to provide on or off activation of air sweep louvers. Dehumidification mode shall provide increased latent removal capability by modulating system operation and set point temperature. Fan–only operation to provide room air circulation when no cooling is required. Diagnostics shall provide continuous checks of unit operation and warn of possible malfunctions. Error messages shall be displayed at the unit. Fan speed control shall be user–selectable: high, medium, low, or microprocessor controlled automatic operation during all operating modes. Automatic heating–to–cooling changeover in heat pump mode. Control shall include deadband to prevent rapid mode cycling between heating and cooling. Indoor coil high temperature protection shall be provided to detect excessive indoor discharge temperature when unit is in heat pump mode. Unit shall have filter track with factory–supplied cleanable filters. Indoor fan motor to operate on 115V on model size 12 and on 208–230V on model sizes 09–36, as specified. Power is supplied from the outdoor unit. All units should have refrigerant lines that can be oriented to connect from the left, right or back of unit. Both refrigerant lines need to be insulated. The condensate pump shall remove condensate from the drain pan when gravity drainage cannot be used. Pump shall be designed for quiet operation. Pump shall consist of two parts: an internal reservoir/sensor assembly, and a remote sound–shielded pump assembly. A liquid level sensor in the reservoir shall stop cooling operation if the liquid level in the reservoir is unacceptable. Refer to schedule for providing condensate pump. Only provide condensate pump were indicated on schedule.

27) Small Split Condensing unit: Casing (HPU): House components in welded steel frame with galvanized steel panels with weather resistant, baked enamel finish. Mount contactors and controls in weatherproof panel provided with full opening access doors. Provide removable access doors or panels with quick fasteners. Compressor: Hermetically sealed, 3600 rpm maximum, resiliently mounted with positive lubrication and internal motor protection. Compressor: Hermetic reciprocating type or Hermetic scroll type. Condenser Coils: Aluminum fins mechanically bonded to seamless copper tubing or all aluminum fins and tube. Air test under water to 425 psig, and vacuum dehydrate. Seal with holding charge of refrigerant. Coil Guard: Louvered or PVC coat steel wire. Fans and motors: Direct driven propeller type condenser fans with fan guard on discharge. Weatherproof motors suitable for outdoor use, single phase permanent split capacitor with permanent lubricated ball bearings and built in thermal overload protection. Fan Guard: PVC coat steel wire. Refrigerant circuit: For each refrigerant circuit, provide: Filter dryer liquid line. Suction accumulator. Suction and liquid line service valves and gage ports. Charging valve. Condenser pressure relief mechanism. Factory wired with single point power connection. Factory wired controls shall include contactor, high– and low–pressure cutouts, internal winding thermostat for compressor, control circuit transformer, non–cycling reset relay. Provide a surge capacitor and lightning arrestor in unit cabinet for protection from power surges due to lightning and switching transients. Provide controls to permit operation down to 0 degrees F ambient temperature were scheduled to include: Crankcase heater with thermostat. Head pressure switch to cycle fan motors in response to refrigerant condensing pressure. Solid state control to vary speed of one condenser fan motor in response to refrigerant condensing pressure. Refer to Schedule on Drawings for additional specifications.

28) Corrosion Resistance Coating (ACU–1 & 2): Evaporator coil serving the fluoride and sodium hypochlorite chemical room shall be factory–coated or field–coated with a corrosion–resistant HVAC coil coating (Heresite P–413, Blygold PolurAl XT, or equal). Coil shall be cleaned, dried, and protected prior to coating. Apply two thin, even coats to all exposed coil surfaces, copper tubing, headers, and U–bends. Coating shall be compatible with chlorine and fluoride vapors and rated for severe chemical environments. Refrigerant piping associated with this system shall be fully coated for corrosion protection and installed within a concealed guard or protective enclosure to prevent chemical exposure and mechanical damage. Contractor shall protect all electrical components during coating and restore system operation after curing.

29) Basic motor requirements: basic requirements apply to mechanical equipment motors, unless otherwise indicated. Motors 1/2 hp and larger: Polyphase, unless otherwise scheduled. Motors smaller than 1/2 hp: single phase. Frequency rating: 60 Hz. Service factor: according to NEMA MG 1, general purpose continuous duty, design type "B." Enclosure: open drip–proof, unless otherwise indicated. Efficiency: motors shall have a higher efficiency rating than industry standard average motor as delineated in IEEE Standard 112, test method 13. Thermal protection: where indicated or required, internal protection automatically opens power supply circuit to motor when winding temperature exceeds a safe value calibrated to temperature rating of motor insulation. Thermal protection device automatically resets when motor temperature returns to normal range, unless otherwise indicated.

30) Hangers and supports: Building attachments: concrete inserts or structural–steel fasteners appropriate for building materials, and beam clamps. Hanger materials: galvanized, sheet steel or round, threaded steel rod. Hangers installed in corrosive atmospheres: electrogalvanized, all–thread rod or galvanized rods with threads painted after installation. Straps and rod sizes: comply with SMACNA's "HVAC Duct Construction Standards––Metal and Flexible" for sheet steel width and thickness and for steel rod diameters. Duct attachments: sheet metal screws, blind rivets, or self–tapping metal screws; compatible with duct materials. Trapeze and riser support galvanized steel shapes and plates: steel shapes complying with ASTM A 36/A 36M.

31) Sealant materials: joint and seam sealants, general: the term "sealant" is not limited to materials of adhesive or mastic nature but includes tapes and combinations of open–weave fabric strips and mastics. Joint and seam tape: 2 inches wide; glass–fiber fabric reinforced. Joint and seam sealant: one–part, nonsag, solvent–release–curing, polymerized butyl sealant, formulated with a minimum of 75 percent solids. Flanged joint mastics: one–part, acid–curing, silicone, elastomeric joint sealants, complying with ASTM C 920, type S, grade NS, class 25, use O.

32) All HVAC equipment such as AH, CU, EF, AC, HP, and RTU shall have visible nameplates with their associated marks on them.

33) Acceptable Manufacturers are:

Small Split Units:	Mitsubishi, Daikin, Hitachi, Toshiba
Grilles, Registers & Diffusers:	Titus, Nailor, Price, Tuttle & Bailey, Kruger, Metal Aire (Color selection submitted to Architect)
Fans:	Twin–City, Cook, Greenheck, Penn Barry, Acme, American Cool Air, Captive Air, Solar & Palau
Louvers/Dampers/Fire Dampers:	United Enertech, Greenheck, Ruskin, Arrow United, Lloyd Industries, Air Balance (Color selection submitted to Architect)
Controls–provided with unit:	Provide thermostats by same manufacturer as equipment

TOTAL ENGINEERS
169 New Street, Macon, GA 31201
(478)741-4632 - T.E. project # 25-101
www.totalengineers.com
GA COA NO # PEF009195 EXP: 06/30/2026

ESG ENGINEERING

GROUNDWATER WELLS #4 & #5
FOR THE
CITY OF FLOWERY BRANCH

REVISIONS

NO.	DESCRIPTION	DATE
2	ADDENDUM 2	

GEORGIA REGISTERED PROFESSIONAL ENGINEER
No. PE009664
KRUNAL M PATEL

DRAWN BY: KMP
CHECKED BY: KMP
DATE:
SCALE:

CONTENT:

MECHANICAL SPECIFICATIONS

SHEET NO:

M0.1

Last Saved By: Owner
Drawing Path: Z:\2025\101 Well Project Chem Feed Building Flowery Branch, GA\DRAWINGS\TE25-101 HVAC.dwg
Plotted: 12/11/2025 10:58 AM

FAN SCHEDULE

MARK	CFM	EXT. SP IN W.G.	DRIVE TYPE	MOTOR HP/W	MAX. FAN (RPM)	MAX TIP SPEED FPM	POWER/ PHASE	LAY-OUT BASIS: GREENHECK	NOTES
EF-1	350	0.20	DIRECT	1/10 HP	1425	4055	115/1	CUE-080-VG	1; 2; 3; 4; 5
EF-2	350	0.20	DIRECT	1/10 HP	1425	4055	115/1	CUE-080-VG	1; 2; 3; 4; 5
EF-3	600	0.20	DIRECT	1/10 HP	1590	4525	115/1	CUE-090-VG	1; 2; 3; 4; 5

1. VERIFY ELECTRIC POWER REQUIREMENTS WITH ELECTRICAL PLANS, WHICH TAKE PRECEDENCE OVER THIS INFORMATION. BOTTOM OF FAN AT 8' AFF. COORDINATE EXACT ELEVATION WITH ARCHITECT.
2. CENTRIFUGAL WALL MOUNT FAN. PROVIDE WALL MOUNTING BRACKET, GRAVITY SHUTTER WITH BUG SCREEN, EC MOTOR, AND SPEED CONTROLLER. ALL PARTS SHALL BE INTERNALLY AND EXTERNALLY COATED(INCLUDING WHEEL AND ALL SURFACES IN AIR STREAM)
3. PROVIDE ALL INTERNALLY AND EXTERNALLY COATED(INCLUDING WHEEL AND ALL SURFACES IN AIR STREAM) SUITABLE FOR SEVERELY CORROSIVE ATMOSPHERES(POTASSIUM PERMANGANATE & SODA ASH). COATING SHALL BE FACTORY APPLIED HI-PRO POLYESTER COATING.
4. POLYSTER COATING SHALL BE GREENHECK HI-PRO POLYSTER OR EQUAL. PROVIDE MANUFACTURER'S WALL GRILL.
5. FAN SHALL BE CONTROLLED BY WALL SWITCH TO ENERGIZE THE FAN PRIOR TO ENTERING ROOM. WALL SWITCH SHALL BE PROVIDED BY ELECTRICAL.

LOUVER SCHEDULE

MARK	SIZE W X H (INCHES)	MIN. FREE AREA (SQ. FT.)	MAXIMUM PRESS. DROP (IN. W.G.)	FINISH (COLOR BY ARCHITECT)	MOTOR OPERATOR	INTERLOCK TO OPEN WITH	LAY-OUT BASIS: GREENHECK	NOTES
L-1	18"X18"	0.73	0.08	ENAMEL	YES	EF-1	GREENHECK ECD-401	1; 2
L-2	18"X18"	0.73	0.08	ENAMEL	YES	EF-2	GREENHECK ECD-401	1; 3
L-3	24"X18"	1.02	0.08	ENAMEL	YES	EF-3	GREENHECK ECD-401	1; 3

1. STATIONARY EXTRUDED ALUMINUM LOUVER. PROVIDE CORROSION RESISTANCE KYNER FINISH. PROVIDE BIRD AND INSECT SCREEN. COORDINATE COLOR WITH ARCHITECT (PROVIDE COLOR SAMPLES WITH SUBMITTAL).
2. BOTTOM OF LOUVER AT 24-INCHES AFF.

MINI SPLIT & COOLING ONLY FAN COIL SYSTEM SCHEDULE

OUTDOOR UNIT MARK	INDOOR UNIT MARK	MIN COOLING MBH	MIN HEATING MBH	SUPPLY AIR CFM HI-LO	POWER VAC/PH	CARRIER MODEL #		NOTES
						OUTDOOR	INDOOR	
HPU-1	ACU-1	18.0	18.0	380-840	208/1	37MARAQ18AA3	45MAHAQ18XA3	1; 2; 3; 4; 5; 6; 7; 8
HPU-2	ACU-2	18.0	18.0	380-840	208/1	37MARAQ18AA3	45MAHAQ18XA3	1; 2; 3; 4; 5; 6; 7; 8
HPU-3	ACU-3	36.0	36.0	380-840	208/1	37MARAQ36AA3	45MAHAQ36XA3	1; 2; 3; 4; 5; 6; 7

1. VERIFY ELECTRICAL POWER REQUIREMENTS WITH ELECTRICAL PLANS WHICH TAKES PRECEDENCE OVER THIS INFORMATION.
2. MINI SPLIT SYSTEM MOUNTED ON WALL (SEE PLANS). PROVIDE MANUFACTURER'S WIERED THERMOSTAT
3. ROUTE CONDENSATE TO OUTSIDE. REFER TO DRAWING FOR FURTHER INFORMATION. PROVIDE RECTOR SEAL COIL MOUNTED(CLIPPED TO COIL) SATE-T-SWITCH SS610E.
4. WIRE SWITCH TO SHUT UNIT DOWN IN CASE OF CONDENSATE OVERFLOW. PROVIDE SELF CLEANING IONIZATION SYSTEM FOR UNIT. REFER TO SCHEDULE FOR FURTHER INFORMATION.
5. PROVIDE DISCONNECT AND ELECTRICAL CONNTECTION TO OUTDOOR UNIT PER MANUFACTURER'S INSTRUCTIONS.
6. COOLING RANGE SHALL BE BETWEEN -22 F TO 122F. HEATING RANGE SHALL BE -22F TO 86F.
7. PROVIDE CONDENSATE PUMP LOCATED WITHIN ACU CABINET TO PUMP CONDENSATE TO DRAIN OUTSIDE WHERE REQUIRED. OMIT PUMP WHERE GRAVITY DRAIN IS POSSIBLE.
8. PROVIDE CORROSION RESISTANCE COATING FOR THE UNIT AND ITS ACCESSORIES. REFER TO SPECIFICATIONS FOR FURTHER INFORMATION.

SELF-CLEANING IONIZATION SYSTEM SCHEDULE

AIRFLOW CAPACITY MIN-MAX CFM	BASIS OF DESIGN GLOBAL PLASMA SOLUTIONS	NOTES
0-1200	GPS-FC	1; 2; 3; 4; 5

1. ONE SELF CLEANING IONIZATION SYSTEM SHALL BE INSTALLED PER SYSTEM.
2. ONE SELF CLEANING IONIZATION SYSTEM SHALL BE INSTALLED PER DUCTLESS MINI SPLIT UNIT.
3. SYSTEM SHALL BE USE FOR DUCTLESS MINI SPLITS.
4. SYSTEM SHALL BE EQUIPPED WITH CARBON FIBER BRUSHES AND LED OPERATION STATUS.
5. INTERLOCK IONIZATION SYSTEM TO RUN WITH EVAPORATOR FAN.

MECHANICAL SYMBOLS & ABBREVIATIONS LEGEND

	NEW PIPE, DUCTWORK OR EQUIPMENT
24x12 24x12	DUCT SIZE: FIRST DIMENSION IS SIDE DRAWN
	FLEXIBLE ROUND DUCTWORK
F SCD SD	FIRE DAMPER, SMOKE DAMPER, SMOKE DETECTOR
	CEILING SUPPLY DIFFUSER
	CEILING RETURN OR EXHAUST AIR
	S.A DUCT OUT OF TU BOX WITH DUCT LINER FOR THR FIRST FIVE FEET OF DUCT OUT OF TU BOX
	SIDEWALL REGISTER OR GRILLE
	CHANGE IN PIPE OR DUCT SIZE OR SHAPE
R	REFRIGERANT PIPING
D	CONDENSATE OR OTHER DRAIN PIPING
	ELBOW TURNED DOWN OR TURNED UP IN PIPING
T	THERMOSTAT, ARROW SHOWS CONTROL WIRING PATH
TC	TIME CLOCK
ø	DIAMETER
U.C.	UNDER-CUT DOOR 3/4", UNLESS OTHER SIZE NOTED
701 E1A	INDICATES EQUIPMENT ON PLANS; TOP ITEM SHOWS TYPE OF EQUIPMENT AND BOTTOM ITEM SHOWS SPECIFIC MARK NUMBER
4 S1 8"ø 300	ITEM IN HEXAGON SHOWS AIR DEVICE MARK NUMBER, ITEM ABOVE LINE SHOWS NECK SIZE, ITEM BELOW LINE SHOWS AIR FLOW THROUGH DEVICE, AND NUMBER IN FRONT SHOWS QUANTITY IF MORE THAN ONE
AFF	ABOVE FINISHED FLOOR
AH	AIR HANDLING UNIT
BTUH, MBH	BRITISH THERMAL UNITS, THOUSAND BRITISH THERMAL UNITS
CAP	CAPACITY
CFM	CUBIC FEET PER MINUTE
CLG	CEILING
CU	CONDENSING UNIT
DB, WB	DRY BULB TEMPERATURE, WET BULB TEMPERATURE
EA, EG	EXHAUST AIR, EXHAUST GRILLE
EF	EXHAUST FAN
EXT SP	EXTERNAL STATIC PRESSURE (USUALLY EXPRESSED IN INCHES OF WATER IN GAGE)
HP	HEAT PUMP UNIT
MVD, VD	MANUAL VOLUME DAMPER
OA	OUTSIDE AIR
RA, RG	RETURN AIR, RETURN GRILLE
SA	SUPPLY AIR
VAC, PH	VOLTS ALTERNATING CURRENT, NUMBER OF PHASES
W, KW	WATTS, KILOWATTS
UH	UNIT HEATER

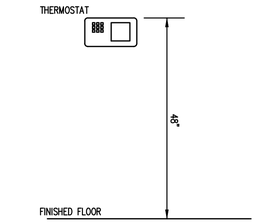

1 T-STAT DETAIL
SCALE: N.T.S.

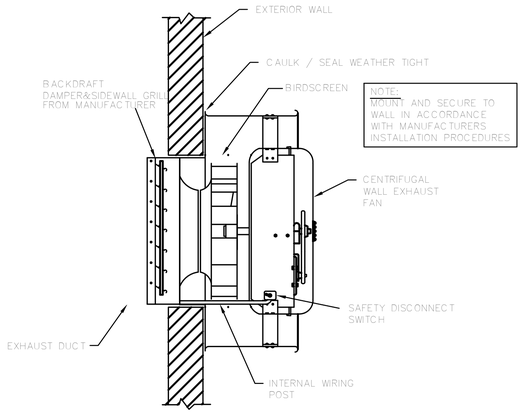

2 SIDEWALL CENTRIFUGAL EXHAUST FAN MOUNTING-DETAIL
SCALE: NTS

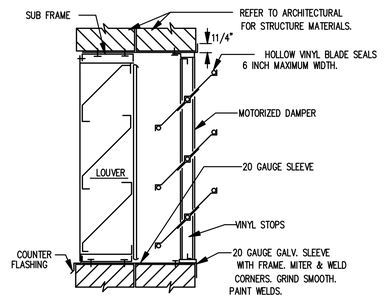

3 WALL MOUNTED LOUVER WITH DAMPER IN MASONRY WALL
SCALE: N.T.S.

TOTAL ENGINEERS
169 New Street, Macon, GA 31201
(478)741-4632 - T.E. project # 25-101
www.totalengineers.com
GA COA NO # PEF009195 EXP: 06/30/2026

ESG ENGINEERING

GROUNDWATER WELLS #4 & #5

FOR THE
CITY OF FLOWERY BRANCH

REVISIONS

NO.	DESCRIPTION	DATE
2	ADDENDUM 2	

GEORGIA REGISTERED PROFESSIONAL ENGINEER KRUNAL M PATEL

DRAWN BY: KMP
CHECKED BY: KMP
DATE:
SCALE:

CONTENT:

MECHANICAL SCHEDULES

SHEET NO:

M0.2

Last Saved By: Owner
Plotted: 12/11/2025 10:58 AM
Drawing Path: Z:\2025\101 Well Project Chem Feed Building Flowery Branch, GA\DRAWINGS\TE\25-101 HVAC.dwg

KEY NOTES(THIS SHEET ONLY):

1. ROUTE CONDENSATE DRAIN TO OUTSIDE 12-INCHES AFF. PROVIDE 45-DEGREE ELBOW AT END OF PIPE TO GUIDE CONDENSATE AWAY FROM EXTERIOR WALL. PROVIDE SPLASH BLOCK AT DISCHARGE.
2. ROUTE CONDENSATE TO MOP SINK.
3. LOUVER SHALL BE 4-INCH DEEP AT MAXIMUM.

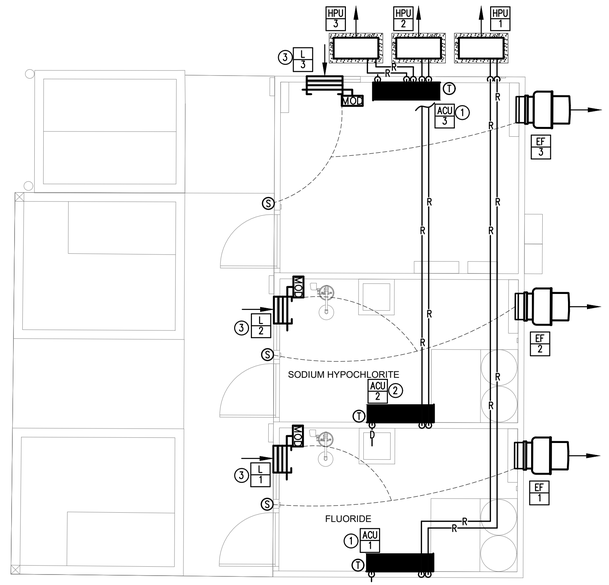

1 MECHANICAL PLAN
SCALE: 1/4"=1'-0"

TOTAL ENGINEERS
169 New Street, Macon, GA 31201
(478)741-4632 - T.E. project # 25-101
www.totalengineers.com
GA COA NO # PEF009195 EXP: 06/30/2026

ESG ENGINEERING

GROUNDWATER WELLS #4 & #5
FOR THE
CITY OF FLOWERY BRANCH

REVISIONS

NO.	DESCRIPTION	DATE
2	ADDENDUM 2	

GEORGIA REGISTERED PROFESSIONAL ENGINEER
KRUNAL M PATEL

DRAWN BY: KMP
CHECKED BY: KMP
DATE:
SCALE:

CONTENT:

MECHANICAL PLAN

SHEET NO:

M1.0

Last Saved By: Owner
Plotted: 12/11/2025 10:58 AM
Drawing Path: Z:\2025\101 Well Project Chem Feed Building Flowery Branch, GA\DRAWINGS\TE\25-101 HVAC.dwg

LEGEND

	LIGHTING AND POWER
	CONDUIT RUN CONCEALED ABOVE CEILING OR IN WALL CONTAINING 3 NUMBER 12 CONDUCTORS UNLESS SHOWN OTHERWISE. HASH MARKS, IF SHOWN, INDICATE QUANTITY OF NUMBER 12 CONDUCTORS. WHERE DRAWING SPACE PROHIBITS HASH MARKS BEING SHOWN REFER TO CIRCUIT NUMBERS AND PROVIDE REQUIRED NUMBER OF CONDUCTORS PER CIRCUIT TYPE.
	CONDUIT RUN CONCEALED IN OR BELOW FLOOR SLAB, OR UNDERGROUND.
A-2,4,6	HOMERUN TO PANELBOARD, LETTER OR LETTERS INDICATE PANELBOARDS, NUMBERS INDICATE CIRCUIT NUMBERS.
	L.E.D. FIXTURE, SURFACE OR STEM MOUNTED.
	L.E.D. LIGHTING FIXTURE, SURFACE WALL BRACKET MOUNTED. MOUNTING HEIGHT AS NOTED.
J	JUNCTION BOX LOCATED ABOVE CEILING OR BELOW GRADE.
	DUPLEX CONVENIENCE OUTLET MOUNTED ABOVE COUNTER, AT +48" TO CENTERLINE OF OUTLET.
	DUPLEX CONVENIENCE OUTLET, GFI TYPE. +18" TO CENTER LINE UNLESS OTHERWISE NOTED. "WP" WHERE SHOWN INDICATES WEATHER-RESISTENT DEVICE WITH METAL IN-USE WEATHERPROOF COVER.
	DUPLEX CONVENIENCE OUTLET, GFI TYPE. MOUNTED ABOVE COUNTER AT +46" TO CENTERLINE OF RECEPTACLE UNLESS NOTED OTHERWISE, "WP" WHERE SHOWN INDICATES WEATHER-RESISTENT DEVICE WITH METAL IN-USE WEATHERPROOF COVER.
	SINGLE POLE TOGGLE SWITCH, +46" TO CENTER LINE MOUNTING HEIGHT.
	PANELBOARD, SEE SCHEDULE.
	DISCONNECT SWITCH, SIZE AS NOTED ON DRAWINGS. FUSED PER MANUFACTURER'S NAME PLATE DATA OF EQUIPMENT SERVED.
GA	GENERATOR REMOTE ANNUNCIATOR. FLUSH RECESSED MOUNTED.

GENERAL NOTES:

1. DO NOT SCALE DRAWINGS TO LOCATE EQUIPMENT OR OUTLETS.
2. MOUNTING HEIGHTS AS INDICATED ON THE DRAWINGS SHALL BE FROM THE FINISHED FLOOR TO THE CENTER LINE OF THE OUTLET BOX.
3. THE ELECTRICAL DRAWINGS ARE ONLY A PART OF THE CONTRACT DOCUMENTS. ALL OF THE DRAWINGS AND SPECIFICATIONS MUST BE REVIEWED FOR THEIR INTERRELATIONSHIP AND REQUIRED COORDINATION BETWEEN DISCIPLINES.
4. ALL CONDUIT ROUTED FROM DISCONNECT TO EXTERIOR HVAC UNITS SHALL BE ROUTED UNDERGROUND. TURN UP ADJACENT TO UNIT AND MAKE TRANSITION TO SEALTITE TO SERVE UNIT. CONDUIT SHALL BE. ROUTED CONCEALED IN WALL.
5. ALL FLUSH RECESSED OUTLET BOXES SHALL BE INSTALLED SUCH THAT FRONT EDGE OF BOX WILL NOT BE SET BACK OF THE FINISHED SURFACE MORE THAN 1/4" IN ORDER TO COMPLY WITH N.E.C. 314-20. SUPPORT OF OUTLET BOX BY RECEPTACLE AND COVERPLATE IS NOT ACCEPTABLE.
6. ALL CONDUIT, OUTLET BOXES, AND LOW VOLTAGE CABLING SHALL BE APPROPRIATELY SUPPORTED THROUGHOUT THE PROJECT. SUPPORT OF THESE ITEMS BY CEILING GRID OR GRID SUPPORT WIRES IS NOT ACCEPTABLE.
7. ALL RECEPTACLES LOCATED WITHIN 6'-0"TO THE EDGE SINK OR OTHER WATER SOURCE SHALL BE GFCI TYPE DEVICE IN ACCORDANCE WITH N.E.C 210-8.A.7. COORDINATE LOCATIONS WITH ARCHITECTURAL AND PLUMBING DRAWINGS PRIOR TO ROUGH-IN.
8. COORDINATE EXACT LOCATION OF ALL MECHANICAL AND PLUMBING EQUIPMENT WITH DIVISION 23 PRIOR TO ROUGH IN. ADJUST LOCATION OF DISCONNECTING MEANS AND BRANCH CIRCUITRY AS REQUIRED.
9. ALL UNISTRUT MATERIAL SHALL BE MADE OF GRADE 304 OR 316 STAINLESS STEEL.
10. ALL FASTENERS USED IN THE CONSTRUCTION OF CHEMICAL FEED SYSTEM SHALL BE 304 OR 316 STAINLESS STEEL (INSTALLED WITH ANTI-GALLING COMPOUND ON FASTENERS 5/6 OR 8MM AND LARGER).
11. ALL FIELD DEVICES WITH A VISIBLE DISPLAY SHALL BE MOUNTED IN A NEMA 4X LOCKABLE ENCLOSURE.
12. ALL FIELD ENCLOSURES AND JUNCTION BOXES SHALL BE SEALED WITH GROMMET TYPE REUSABLE SEALS.
13. ALL EXTERIOR JUNCTION BOXES SHALL BE NEMA 4X RATED.
14. ALL EXTERIOR ELECTRICAL PANELBOARDS, TRANSFORMERS, DISCONNECTS, RECEPTACLES, AND SWITCHES SHALL BE NEMA 4X RATED.
15. CONTRACTOR SHALL PROVIDE CONDUIT AND BACKBOXES FOR ALL DEVICES AND WIRING. COORDINATE ALL CONTROL CABLING CONNECTIONS AND REQUIREMENTS WITH CONTROLS INSTALLER PRIOR TO ROUGH IN.
16. ALL EXPOSED EXTERIOR CONDUIT, RACEWAYS, AND SUPPORTS MEMBERS SHALL BE ALUMINUM.
17. COORDINATE EXACT LOCATION OF ALL DEVICES THAT REQUIRE CONTROL CABLING WITH MANUFACTURER PRIOR TO INSTALLATION.
18. ENSURE CONDUIT CONNECTIONS TO JUNCTION BOXES ARE MADE IN SUCH A WAY AS TO MAINTAIN THE 4X RATING OF THE JUNCTION BOX.
19. CONTRACTOR SHALL REFER TO DETAIL SHEETS FOR ALL MOUNTING REQUIREMENTS FOR ALL DEVICES AND EQUIPMENT. ALL EQUIPMENT LOCATED OUTDOORS SHALL BE PROVIDED WITH STAINLESS STEEL RACK AND ALL OTHER REQUIRED MOUNTING HARDWARE AS OUTLINED IN DETAILS AS REQUIRED FOR MOUNTING OF EQUIPMENT AND DEVICES.

LIGHTING FIXTURE SCHEDULE

TYPE	DESCRIPTION	WATTS	LUMENS	COLOR TEMP	MANUFACTURERS	NOTES
A	LED 4' STRIP LIGHT FIXTURE SURFACE MOUNTED WITH RIBBED FROSTED ACRYLIC ENCLOSED AND GASKETED LENS, NEMA 4X HOUSING AND WHITE FINISH.	34 W	3900	4000 K	COLUMBIA "LXEM" SERIES OR EQUAL	
B	L.E.D. WALL MOUNTED FIXTURE, DIE-CAST WALL PACK, GLASS REFRACTOR. TYPE III DISTRIBUTION.	30 W	4370	4000 K	HUBBELL"WGH2" SERIES OR EQUAL	
C	LED SURFACED MOUNTED FLOOD LIGHT WITH TWO DIE-CAST ALUMINUM HEADS, TEMPER GLASS LENSES, AND WHITE FINISH.	27 W	2100	4000 K	HUBBELL "MARSHAL" SERIES OR EQUAL	

GENERAL NOTES:

A. ALL LUMENS LISTED ARE DELIVERED LUMENS. ALL EQUALS TO SPECIFIED SHALL NOT BE ANY LOWER THAN 5% OF SPECIFIED LUMENS NOR WATTAGE BE HIGHER THAN 15% OF SPECIFIED WATTAGE.

B. LISTING OF MANUFACTURERS DOES NOT EQUAL AUTOMATIC APPROVAL. ALL CHARACTERISTICS NOTED IN DESCRIPTION SECTION MUST BE MET IN ORDER TO BE APPROVED. WHERE VENDOR / REP DOES NOT HAVE ONE OF MANUFACTURERS LISTED, PRIOR APPROVAL IS REQUIRED TO BE SUBMITTED TO ENGINEER TEN (10) DAYS PRIOR TO BID.

C. ALL FIXTURE VOLTAGES SHALL BE MULTIVOLT TYPE UNLESS OTHERWISE NOTED.

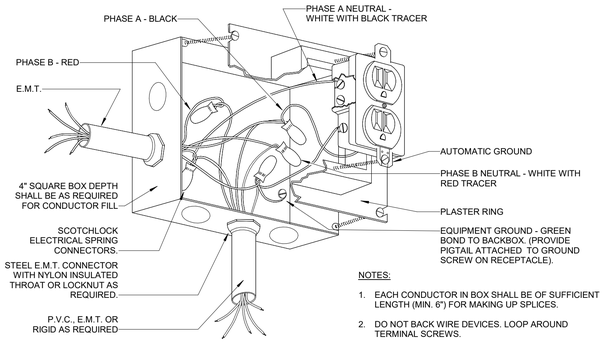

NOTES:

1. EACH CONDUCTOR IN BOX SHALL BE OF SUFFICIENT LENGTH (MIN. 6") FOR MAKING UP SPLICES.
2. DO NOT BACK WIRE DEVICES. LOOP AROUND TERMINAL SCREWS.
3. FACE OF PLASTER RING SHALL BE FLUSH WITH WALL.

1 / E1.0 DETAIL - RECEPTACLE CONNECTION
NO SCALE

PANELBOARD: MDP

LOCATION:
MOUNTING: SURFACE NEMA 1
MAIN DEVICE: 225.0 A MAIN CB
BUS AMPS: 225 AMPS
VOLTAGE: 480Y/277 V. 3 ø 4 W.
A.I.C. RATING: 42,000 AMPS SYMMETRICAL
SPECIAL:
FED FROM: ATS-MDP

LOAD NAME	NOTE	BKR	P	CKT	A	B	C	CKT	P	BKR	NOTE	LOAD NAME
SPARE		20 A	1	1	0.0 0.5			2	1	20 A		LIGHTING
SPARE		20 A	1	3	0.0 0.0			4	1	20 A		SPARE
SPARE		20 A	1	5		0.0 0.0		6	1	20 A		SPARE
SPARE		20 A	1	7	0.0 0.0			8	1	20 A		SPARE
SPARE		20 A	1	9	0.0 0.0			10	1	20 A		SPARE
SPARE		20 A	1	11		0.0 0.0		12	1	20 A		SPARE
TRANSFORMER T-LA		30 A	3	13	5.4 0.0			14				
				15		6.1 0.0		16	3	50 A		SPARE
				17			6.2 0.0	18				
WW CONTROL PANEL		30 A	3	19	3.0 9.5			20				
				21		3.0 9.5		22	3	50 A		HW CONTROL PANEL
				23			3.0 9.5	24				
IWH-1		125 A	3	25	22.5 0.0			26				
				27		22.5 0.0		28	3	40 A		SPD
				29			22.5 0.0	30				
		TOTAL LOAD:			40 kVA	40 kVA	40 kVA					
		TOTAL AMPS:			144 A	145.9 A	146 A					

LOAD CLASSIFICATION	CONNECTED	DEMAND	ESTIMATED	PANEL TOTALS	
HVAC	41779 VA	100.00%	41779 VA		
RECEPTACLES	4320 VA	100.00%	4320 VA	CONNECTED LOAD:	120750 VA
MTR	77174 VA	121.96%	94118 VA	ESTIMATED DEMAND:	137575 VA
LITES	474 VA	125.00%	592 VA	CONNECTED CURRENT:	145.2 A
				EST. DEMAND CURRENT:	165.5 A

NOTES:

PANELBOARD: LA

LOCATION:
MOUNTING: SURFACE NEMA 1
MAIN DEVICE: 100.0 A MAIN CB
BUS AMPS: 100 AMPS
VOLTAGE: 208Y/120 V. 3 ø 4 W.
A.I.C. RATING: 10,000 AMPS SYMMETRICAL
SPECIAL:
FED FROM: T-LA

LOAD NAME	NOTE	BKR	P	CKT	A	B	C	CKT	P	BKR	NOTE	LOAD NAME
SCADA PANEL		20 A	1	1	0.0 1.7			2				
RECEPTACLES		20 A	1	3		0.5 1.7		4	2	25 A		HPU/ACU-1
SH-(1-4)		20 A	1	5			0.8 1.7	6				
EF-(1-3)		15 A	1	7	0.5 1.7			8	2	25 A		HPU/ACU-2
FL-(1-4)		20 A	1	9		0.8 3.0		10				
RECEPTACLES		20 A	1	11			0.4 3.0	12	2	40 A		HPU/ACU-3
RECEPTACLES		20 A	1	13	0.4 0.1			14				
BATTERY CHARGER		20 A	1	15		0.0 0.1		16	2	30 A		DATA RECEPTACLE
BLOCK HEATER		30 A	1	17			0.0 0.4	18	1	20 A		CF-CP
SPARE		20 A	1	19	0.0 0.0			20	1	20 A		SPARE
SPARE		20 A	2	21		0.0 0.0		22	1	20 A		SPARE
				23			0.0 0.0	24	1	20 A		SPARE
SPARE		30 A	3	25	0.0 0.0			26				
				27		0.0 0.0		28	3	40 A		SPD
				29			0.0 0.0	30				
		TOTAL LOAD:			4 kVA	6 kVA	6 kVA					
		TOTAL AMPS:			37 A	52.9 A	54 A					

LOAD CLASSIFICATION	CONNECTED	DEMAND	ESTIMATED	PANEL TOTALS	
HVAC	13179 VA	100.00%	13179 VA		
RECEPTACLES	3240 VA	100.00%	3240 VA	CONNECTED LOAD:	16659 VA
MTR	504 VA	108.33%	546 VA	ESTIMATED DEMAND:	16701 VA
				CONNECTED CURRENT:	46.2 A
				EST. DEMAND CURRENT:	46.4 A

NOTES:

ESG ENGINEERING
6400 Peake Rd
Macon, GA 31210
Ph: (478) 474-4600
Fax: (478) 474-5045

GROUNDWATER WELLS #4 & #5
FOR THE
CITY OF FLOWERY BRANCH

REVISIONS

NO.	DESCRIPTION	DATE
3	REV 3	12-10-25

PERMIT SET

GEORGIA REGISTERED NO. 038816 PROFESSIONAL ENGINEER BRIAN W. NEWLAND

DRAWN BY: CT
CHECKED BY: BN
DATE: OCT 2025
SCALE: AS SHOWN

CONTENT:
LEGEND, NOTES, DETAILS, AND FIXTURE SCHEDULE

SHEET NO:
E1.0

EDC
ELECTRICAL DESIGN CONSULTANTS
ELECTRICAL ENGINEERS
AUGUSTA OFFICE - PROJECT #: 25173
edc1973.com

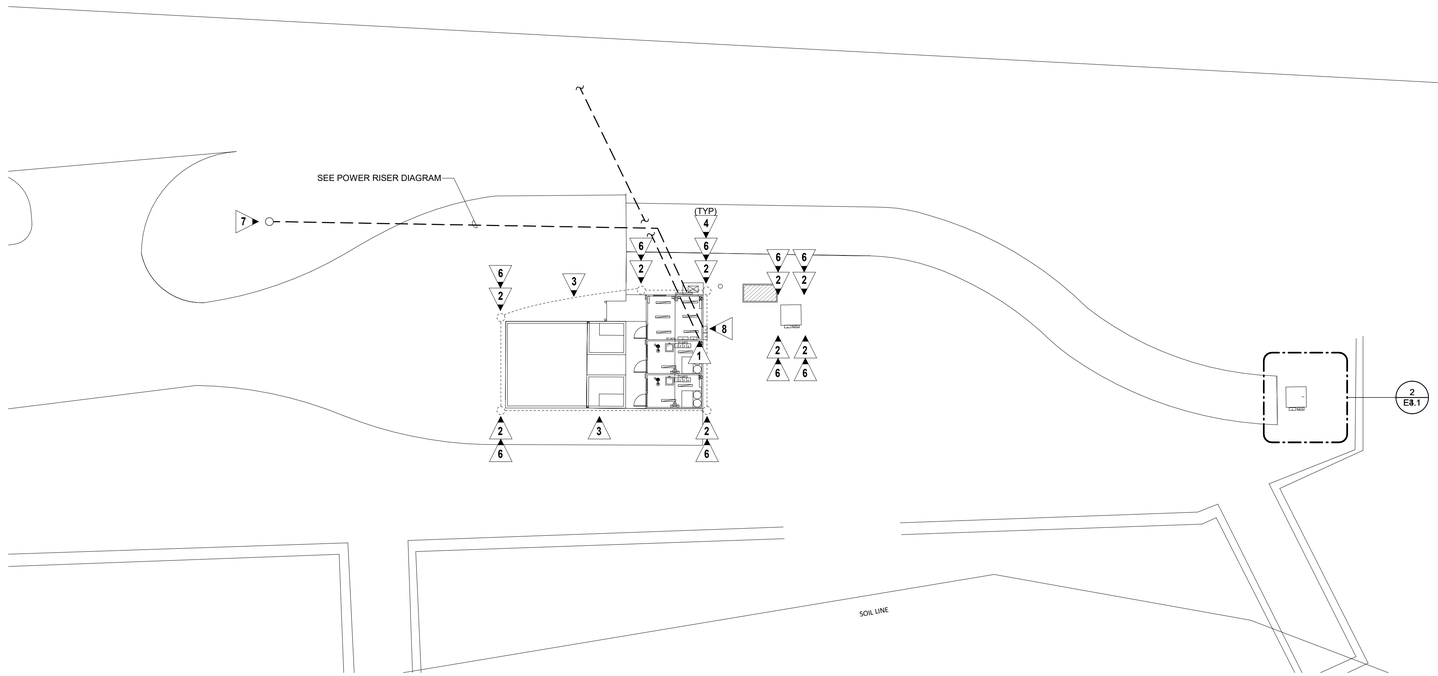

1 E1.1 ELECTRICAL SITE PLAN
SCALE: 1/16" = 1'-0"

GENERAL NOTES:

1. DIVISION 26 TO COORDINATE EXACT LOCATION OF UTILITY TRANSFORMER WITH POWER COMPANY PRIOR TO BID. DIVISION 26 SHALL COORDINATE EXACT ROUTING OF UNDERGROUND PRIMARY CONDUCTORS WITH POWER COMPANY PRIOR TO BID. NO ADDITIONAL COST SHALL BE INCURRED BY THE OWNER DUE TO THE LACK OF COORDINATION BY THE CONTRACTOR.
2. PROVIDE MARKING TAPE OVER ALL CONDUITS OUTSIDE OF BUILDING FOOTPRINT.
3. SURVEY AND SITE INFORMATION PROVIDED BY OTHERS. VERIFY ALL CONDITIONS ON SITE AND WITH OFFICIAL SURVEYS AND OTHERS TRADE.
4. CALL UNDERGROUND UTILITY CENTER AND VERIFY ALL UNDERGROUND UTILITIES.
5. UNDERGROUND CONDUIT SHALL BE SCHEDULE 40 PVC, UNLESS NOTED OTHERWISE.
6. CONTRACTOR SHALL STAKE-OFF ALL EXISTING UTILITIES PRIOR TO ROUGH-IN. ALL NEW INSTALLATION SHALL BE COORDINATION WITH EXISTING UTILITY LOCATIONS.
7. PROVIDE HANDHOLES AS REQUIRED BY NEC.

KEYED NOTES:

1. STUB OUT (2) 2" EMPTY CONDUITS WITH PULL STRINGS FOR FIBER. COORDINATE EXACT LOCATION AND REQUIREMENTS WITH TELCO COMPANY.
2. PROVIDE GROUND ROD AT LOCATION SHOWN. CONNECT GROUND ROD TO BUILDING STEEL AT CORNER. NUMBER AS REQUIRED FOR TOTAL RESISTANCE OF 25 OHMS. GROUND RODS SHALL BE 3/4" X 10'-0" COPPER CLAD STEEL. CONNECTION TO ALL GROUND RODS SHALL BE BY EXOTHERMIC WELD.
3. PROVIDE GROUND RING 30" BELOW GRADE WITH WARNING TAPE LOCATE 12" BELOW GRADE. CONSTRUCT GROUND RING WITH 1/0 AWG BARE COPPER WIRE.
4. MAKE GROUNDING CONNECTION WITH 1/0 AWG COPPER WIRE TO EQUIPMENT AS SHOWN. TYPICAL FOR ALL GROUNDING CONNECTIONS SHOWN.
5. COORDINATE EXACT GROUND RING BURIAL PATHING WITH CIVIL.
6. PROVIDE GROUND ROD ENCLOSURE WITH REMOVABLE CAP.
7. APPROXIMATE LOCATION OF GEORGIA POWER POLE MOUNTED TRANSFORMER. COORDINATE EXACT LOCATION WITH CIVIL PLANS.
8. APPROXIMATE LOCATION OF ELECTRICAL SERVICE DISCONNECT. SEE SHEET E3.1 FOR EXACT LOCATION AND SHEET E5.1 FOR CONDUIT AND CONDUCTOR REQUIREMENTS. COORDINATE EXACT ROUTING WITH CIVIL PLANS PRIOR TO ROUGH IN.

ESG ENGINEERING
6400 Peake Rd
Macon, GA 31210
Ph.: (478) 474-4496
Fax: (478) 474-5045

GROUNDWATER WELLS #4 & #5

FOR THE
CITY OF FLOWERY BRANCH

REVISIONS

NO.	DESCRIPTION	DATE
3	REV 3	12-10-25

PERMIT SET

GEORGIA REGISTERED NO. 038816 PROFESSIONAL ENGINEER BRIAN W. NEWLAND

DRAWN BY: CT
CHECKED BY: BN
DATE: OCT 2025
SCALE: AS SHOWN

CONTENT:
ELECTRICAL SITE PLAN

SHEET NO:
E1.1

EDC ELECTRICAL DESIGN CONSULTANTS
ELECTRICAL ENGINEERS
AUGUSTA OFFICE - PROJECT #: 25173
edc1973.com

GENERAL NOTES:

1. ALL EQUIPMENT/RACEWAYS SHALL BE SUITABLE FOR THE ENVIRONMENT IN WHICH IT IS INSTALLED.

KEYED NOTES:

1 ▶ PROVIDE DIE-CAST WEATHERPROOF JUNCTION BOX WITH LIGHT SWITCH AND WEATHERPROOF COVER TO CONTROL DESIGNATED LIGHT FIXTURE.

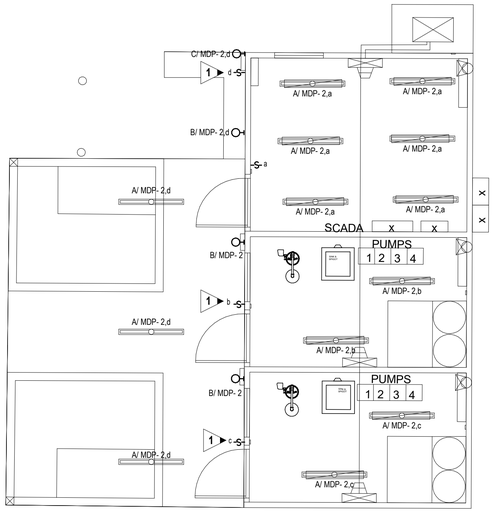

1 / E2.1 LIGHTING PLAN
SCALE: 1/4" = 1'-0"

LIGHT FIXTURE DESIGNATION DESCRIPTION

EXAMPLE: B/HA1-1,b

- PANEL DESIGNATION:
- FIXTURE TYPE: TYPE "A" IF NO CAPITAL LETTER SHOWN
- CIRCUIT NUMBER:
- SWITCH LEG DESIGNATION WHEN MULTIPLE SWITCHES ARE IN SAME SPARE/AREA

B/ HA1 -1, b

EDC
ELECTRICAL DESIGN CONSULTANTS
ELECTRICAL ENGINEERS
AUGUSTA OFFICE - PROJECT #: 25173
edc1973.com

ESG ENGINEERING
6400 Peake Rd
Macon, GA 31210
Ph: (478) 474-4995
Fax: (478) 474-5045

GROUNDWATER WELLS #4 & #5

FOR THE
CITY OF FLOWERY BRANCH

REVISIONS

NO.	DESCRIPTION	DATE
3	REV 3	12-10-25

PERMIT SET

GEORGIA REGISTERED NO. 038816 PROFESSIONAL ENGINEER BRYAN W. NEWLAND

DRAWN BY: CT
CHECKED BY: BN
DATE: OCT 2025
SCALE: AS SHOWN

CONTENT:
LIGHTING PLAN

SHEET NO:
E2.1

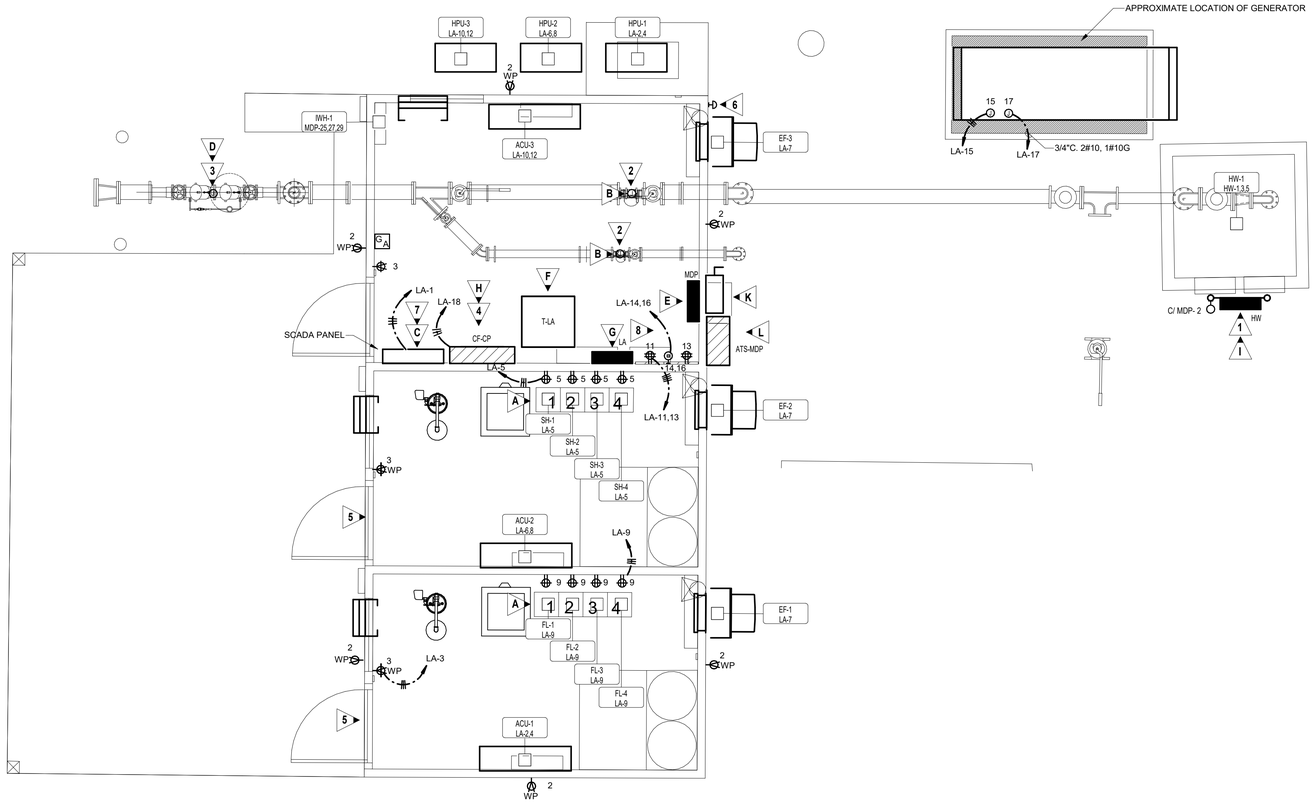

1 POWER PLAN
E3.1 SCALE: 3/8" = 1'-0"

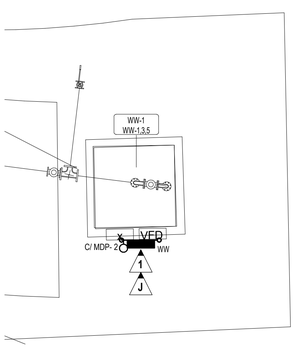

2 ELECTRICAL SITE PLAN - WATERSTONE WELL
E3.1 NO SCALE

MECHANICAL EQUIPMENT TAG DESCRIPTION

EXAMPLE: RAC-1 HR-7,9,11

EQUIPMENT ID:

PANEL - CIRCUIT NUMBER:

MECHANICAL/ PLUMBING EQUIPMENT

RAC-1 HR-7,9,11

NOTE: REFER TO MECHANICAL CONNECTION SCHEDULES FOR CIRCUITING INFORMATION

MECHANICAL CONNECTION SCHEDULE

ID	EQUIPMENT INFORMATION VOLT	PH	MCA	MOCP	CIRCUIT INFORMATION PANEL	NO.	APPARENT LOAD	CONDUIT & WIRE SIZE	NOTES	DISC TYPE	REMARKS
FANS											
EF-1	120 V	1	1.8 A	20.0 A	LA	7	168 VA	3/4"C,2#12,1#12G	A	MRS	-
EF-2	120 V	1	1.8 A	20.0 A	LA	7	168 VA	3/4"C,2#12,1#12G	A	MRS	-
EF-3	120 V	1	1.8 A	20.0 A	LA	7	168 VA	3/4"C,2#12,1#12G	A	MRS	-
HENDERSON WELL PUMP											
HW-1	480 V	3	43.0 A	45.0 A	HW	1,3,5	28600 VA	1"C,3#6,1#10G		CP	-
SPLIT SYSTEM OUTDOOR AIR UNITS											
HPU-1	208 V	1	21.0 A	25.0 A	LA	2,4	3494 VA	3/4"C,2#10,1#10G		FS	30/2/4X
HPU-2	208 V	1	21.0 A	25.0 A	LA	6,8	3494 VA	3/4"C,2#10,1#10G		FS	30/2/4X
HPU-3	208 V	1	36.0 A	40.0 A	LA	10,12	5990 VA	3/4"C,2#8,1#10G		FS	60/2/4X
SPLIT SYSTEMS INDOOR UNITS											
ACU-1	208 V	1	0.0 A	0.0 A	LA	2,4	0 VA		B	MRS	-
ACU-2	208 V	1	0.0 A	0.0 A	LA	6,8	0 VA		B	MRS	-
ACU-3	208 V	1	0.0 A	0.0 A	LA	10,12	0 VA		B	MRS	-
WATER HEATER											
IWH-1	480 V	3	101.6 A	125.0 A	MDP	25,27,29	67575 VA	1 1/2"C,3#1,1#6G		FS	200/3/3R
WATERSTONE WELL PUMP											
WW-1	480 V	3	13.8 A	20.0 A	WW	1,3,5	9145 VA	3/4"C,3#12,1#12G		CP	-

SCHEDULE NOTES:

A. INTERLOCK WITH WALL SWITCH (PROVIDED BY DIVISION 26). LOUVER SHALL FULLY OPEN PRIOR TO UNIT BEING ENERGIZED COORDINATE WITH DIVISION 23. COORDINATE ASSOCIATED LOUVERS WITH MECHANICAL PLANS PRIOR TO ROUGH IN. PROVIDE ALL RACEWAY AND CONDUCTORS FOR A COMPLETE AND OPERATIONAL SYSTEM.

B. "ACU" UNIT IS POWERED FROM "HPU" UNIT. PROVIDE 3/4"C., WITH PULLSTRING FROM "HPU" UNIT TO "ACU" UNIT FOR CONTROLS CABLING. PROVIDE MOTOR RATED SWITCH AT "ACU" UNIT IF POWERED AT 208VAC. IF POWERED AT 24VDC, MOTOR RATED SWITCH IS NOT REQUIRED. COORDINATE WITH MECHANICAL CONTRACTOR PRIOR TO ROUGH IN.

GENERAL NOTES:

1. ALL NEW CONDUIT, BOXES, AND SUPPORTS SHALL BE SCHEDULE 40 PVC, UNLESS NOTED OTHERWISE.
2. ALL FEEDER CONDUCTORS ARE BASED ON COPPER UNLESS OTHERWISE NOTED. CONTRACTOR SHALL BE RESPONSIBLE FOR PROVIDING LUGS ON ALL PANELS, BREAKERS, TRANSFORMERS, ETC. TO ACCOMMODATE CONDUCTOR SIZE SHOWN.
3. ALL EQUIPMENT/RACEWAYS SHALL BE SUITABLE FOR THE ENVIRONMENT IN WHICH IT IS INSTALLED.
4. PROVIDE CONTROLS TO ACTIVATE BOOSTER AND FLUORIDE PUMP WHEN WELL PUMP IS STARTED.
5. PRIOR TO PURCHASE COORDINATE CONTROLS WITH CITY OF FLOWERY BRANCH.

KEYED NOTES:

1. PROVIDE NEMA 4X CONTROL PANEL ON STAINLESS STEEL UNISTRUT RACK AS SHOWN. COORDINATE EXACT RACK REQUIREMENTS WITH CONTROL PANEL MANUFACTURER. REFER TO DETAIL 6/E5.1 FOR TYPICAL CONTROL PANEL RACK MOUNTING DETAIL.
2. PROVIDE (2) SHIELDED TWISTED PAIR CABLE IN 1/2"C. TO CONTROL PANEL FOR ULTRASONIC FLOW METER, EQUAL TO BELDEN 3043A OR AS PER CONTROL PANEL MANUFACTURER INSTALLATION DRAWINGS AND DETAILS.
3. PROVIDE (2) SHIELDED TWISTED PAIR CABLE IN 1/2"C. TO CONTROL/SCADA PANEL FOR DETECTOR ASSEMBLY, EQUAL TO BELDEN 3043A OR AS PER CONTROL/SCADA PANEL MANUFACTURER INSTALLATION DRAWINGS AND DETAILS.
4. SEE RISER DIAGRAM 2/E5.1 FOR CONNECTION REQUIREMENTS.
5. ALL CONDUIT, BOXES, AND SUPPORTS IN THIS SPACE SHALL BE SCHEDULE 40 PVC. SEAL ALL CONDUITS ENTERING THIS SPACE AGAINST MIGRATION OF ALL GAS WITH ELECTRICAL DUCT SEAL.
6. EMERGENCY SHUT OFF PUSH BUTTON FOR GENERATOR. PROVIDE NEMA 4X ENCLOSURE.
7. SCADA PANEL SHALL HAVE THE CAPABILITY TO COMMUNICATE WITH MAIN WATER PLANT VIA RADIO SIGNAL. COORDINATE EXACT SCADA REQUIREMENTS WITH THE CITY OF FLOWERY BRANCH STANDARDS.
8. PROVIDE 3/4"C. 2#10, 1#10G. FOR CIRCUIT

EQUIPMENT LIST:

- A CHEMICAL INJECTOR PUMPS
- B ULTRASONIC FLOW METER
- C SCADA PANEL
- D DETECTOR ASSEMBLY
- E PANEL MDP
- F TRANSFORMER T-LA
- G PANEL LA
- H CHEMICAL INJECTOR CONTROL PANEL
- I HENDERSON WELL CONTROL PANEL
- J WATERSTONE WELL CONTROL PANEL
- K SERVICE DISCONNECT
- L ATS-MDP

DISCONNECT TYPES

TYPE	FURNISH	DESCRIPTION
CP	-	CONTROL PANEL
CB	DIV. 26	DIV. 26 - CIRCUIT BREAKER
FS	DIV. 26	DIV. 26 - FUSED SWITCH
MRS	DIV. 26	DIV. 26 - MOTOR RATED SWITCH
NFS	DIV. 26	DIV. 26 - NON-FUSED SWITCH
NFS (M)	MANUF.	MANUF - NON-FUSED SWITCH

EDC ELECTRICAL DESIGN CONSULTANTS
ELECTRICAL ENGINEERS
AUGUSTA OFFICE - PROJECT #: 25173
edc1973.com

ESG ENGINEERING
6400 Peake Rd
Macon, GA 31210
Ph.: (478) 474-4406
Fax: (478) 474-5045

GROUNDWATER WELLS #4 & #5

FOR THE
CITY OF FLOWERY BRANCH

REVISIONS

NO.	DESCRIPTION	DATE
3	REV. 3	12-10-25

PERMIT SET

GEORGIA REGISTERED NO. 038816 PROFESSIONAL ENGINEER BRIAN W. NEWMAN

DRAWN BY: CT
CHECKED BY: BN
DATE: OCT 2025
SCALE: AS SHOWN

CONTENT:
POWER PLAN

SHEET NO:
E3.1

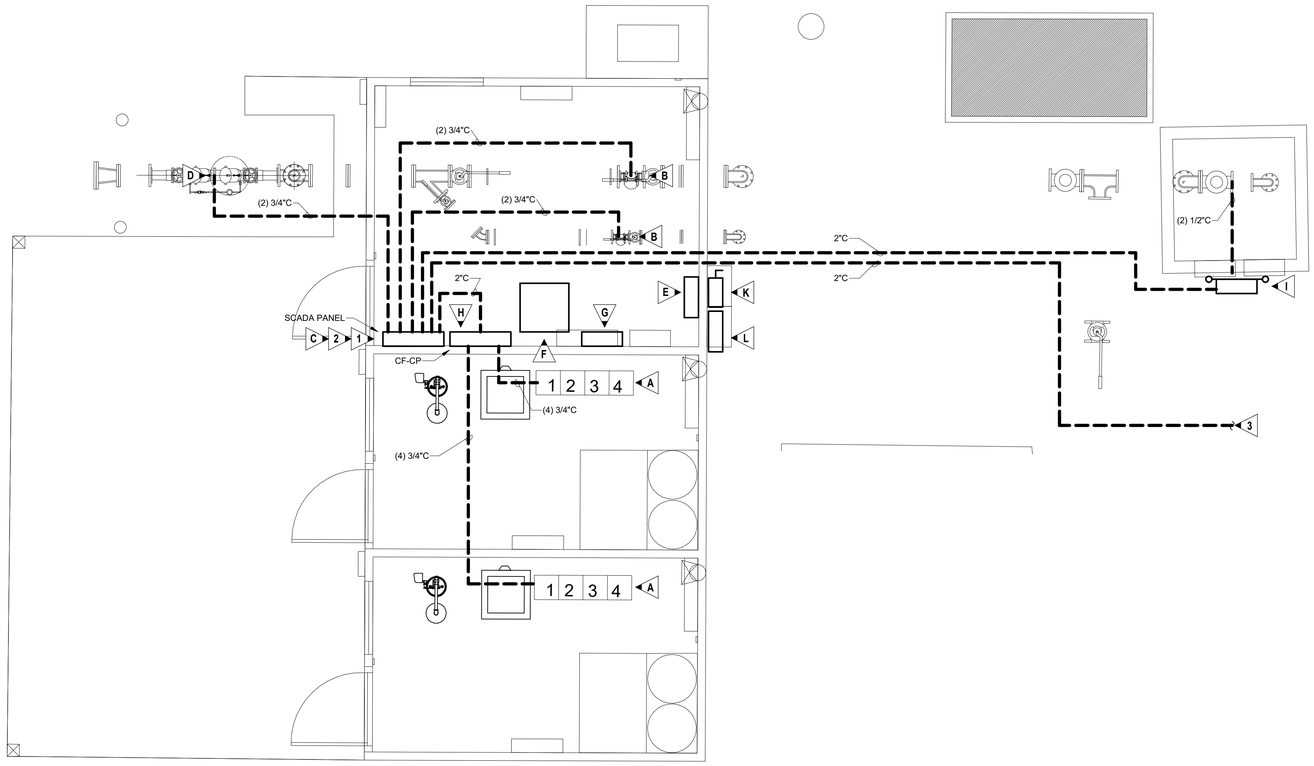

1 E4.1 SYSTEMS PLAN
SCALE: 3/8" = 1'-0"

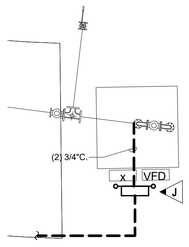

2 E4.1 SYSTEMS PLAN - WATERSTONE WELL
NO SCALE

GENERAL NOTES:

1. ALL EQUIPMENT/RACEWAYS SHALL BE SUITABLE FOR THE ENVIRONMENT IN WHICH IT IS INSTALLED.
2. PROVIDE CONTROLS TO ACTIVATE BOOSTER AND FLUORIDE PUMP WHEN WELL PUMP IS STARTED.
3. PRIOR TO PURCHASE COORDINATE CONTROLS WITH CITY OF FLOWERY BRANCH.

KEYED NOTES:

1. ALL CONDUIT ROUTINGS SHOWN ARE FOR DIAGRAMMATIC PURPOSES ONLY. COORDINATE EXACT ROUTING WITH CIVIL PLAN PRIOR TO ROUGH IN.
2. ROUTING SHOWN ARE TO PROVIDE CONDUIT SIZES AND CONNECTION POINTS ONLY. REFER TO RISER DIAGRAM ON SHEET E5.1 FOR CONDUCTOR/CABLING REQUIREMENTS FOR EACH CONDUIT.
3. CONDUIT TO CONTINUE TO WATERSTONE WELL. REFER TO 2/E4.1 FOR WELL LOCATION.

SCADA/CONTROLS NOTE:

CONTRACTOR SHALL EMPLOY THE SERVICES OF AN EXPERIENCED CONTROL SYSTEMS INTEGRATOR (CSI) TO PROVIDE SCADA IMPROVEMENTS AT THE NEW WELL SITE PLC AND WITHIN THE EXISTING CITY SCADA SYSTEM (AT THE WASTEWATER TREATMENT PLANT) AND IN THE EXISTING RTU/PANEL AT THE EXISTING/OFFSITE BOOSTER STATION. THE CITY'S CURRENT BOOSTER PUMPS RUN OFF A SCADA-READ, PRESSURE GAUGE SIGNAL TRANSMITTED VIA RADIO THAT IS CORRELATED TO ELEVATED TANK LEVEL (BOOSTER PUMPS TURN ON WHEN TANK LEVEL = 7' BELOW FULL AND TURN OFF WHEN TANK LEVEL = 1' BELOW FULL). AT THE NEW WELL SITE PLC, CONTRACTOR SHALL PROVIDE A PROGRAMMABLE LOGIC CONTROLLER (PLC) CAPABLE OF RECEIVING I/O'S AND RELAYS FROM THE NEW SUBMERSIBLE WELL PUMPS, NEW FLOW METERS, AND FROM THE OFFSITE PRESSURE GAUGE SIGNAL (RADIO). THE NEW SYSTEM SHALL BE CAPABLE OF STARTING THE NEW WELL PUMPS AT AN OPERATOR-SPECIFIED TANK LEVEL (SUCH AS 6' BELOW FULL), AND THE PUMPS SHALL RUN FOR EITHER A SET DURATION OR UNTIL A TOTALIZED FLOW HAS BEEN ACCUMULATED (SUCH AS 50,000 GPD, PER THE PROPOSED FLOW METERS). THE NEW WELL PUMPS SHALL ALTERNATE OPERATIONS SUCH THAT BOTH THE WATERSTONE AND HENDERSON PUMPS DO RUN CONCURRENTLY, AND THE NEW WELL PUMPS SHALL NOT RUN WHILE THE EXISTING OFFSITE BOOSTER PUMPS ARE RUNNING. CONTRACTOR/CSI SHALL INCORPORATE NEW RELAYS FROM THE NEW WELL PUMPS, NEW FLOW METERS, AND NEW RELAYS FROM THE EXISTING BOOSTER STATION INTO THE CITY'S EXISTING SCADA SYSTEM. PROVIDE ALL EQUIPMENT, CABLING, DEVICES, ETC. FOR A COMPLETE AND OPERATIONAL SCADA SYSTEM.

EQUIPMENT LIST:

- A ▶ CHEMICAL INJECTOR PUMPS
- B ▶ ULTRASONIC FLOW METER
- C ▶ SCADA PANEL
- D ▶ DETECTOR ASSEMBLY
- E ▶ PANEL MDP
- F ▶ TRANSFORMER T-LA
- G ▶ PANEL LA
- H ▶ CHEMICAL INJECTOR CONTROL PANEL
- I ▶ HENDERSON WELL CONTROL PANEL
- J ▶ WATERSTONE WELL CONTROL PANEL
- K ▶ SERVICE DISCONNECT
- L ▶ ATS-MDP

ESG ENGINEERING
6400 Peake Rd
Macon, GA 31210
Ph: (478) 474-4495
Fax: (478) 474-5045

GROUNDWATER WELLS #4 & #5

FOR THE
CITY OF FLOWERY BRANCH

REVISIONS

NO.	DESCRIPTION	DATE
3	REV 3	12-10-25

PERMIT SET

GEORGIA REGISTERED NO. 038816 PROFESSIONAL ENGINEER BRIAN W. NEWLAND

DRAWN BY: CT
CHECKED BY: BN
DATE: OCT 2025
SCALE: AS SHOWN

CONTENT:
SYSTEMS PLAN

SHEET NO:
E4.1

EDC ELECTRICAL DESIGN CONSULTANTS
ELECTRICAL ENGINEERS
AUGUSTA OFFICE - PROJECT #: 25173
edc1973.com

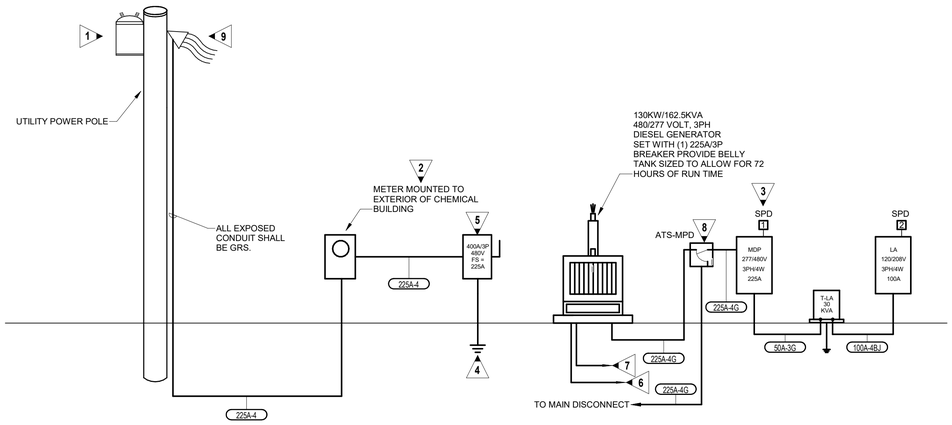

1 POWER RISER DIAGRAM
E5.1 NO SCALE

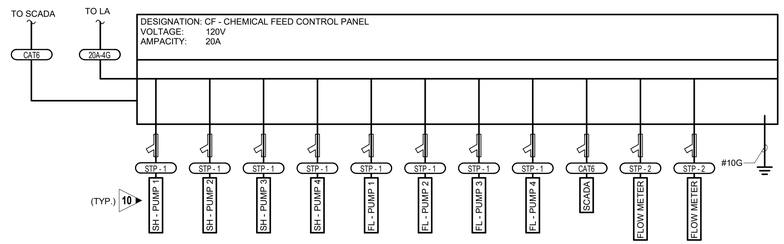

2 POWER RISER DIAGRAM - CF CONTROL PANEL
E5.1 NO SCALE

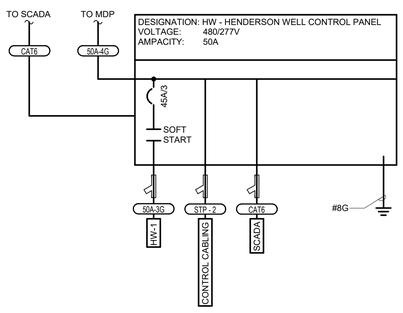

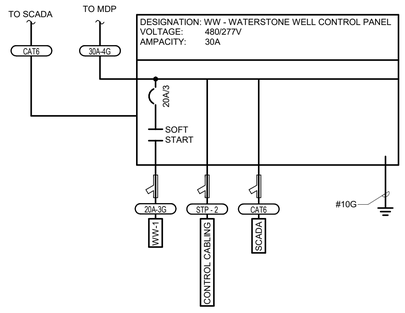

3 POWER RISER DIAGRAM - CONTROL PANEL
E5.1 NO SCALE

KEYED NOTES:

1. NEW UTILITY POLE MOUNTED TRANSFORMERS TO BE PROVIDED AND INSTALLED BY UTILITY COMPANY.
2. METER BY UTILITY COMPANY, INSTALLED BY CONTRACTOR.
3. CONTRACTOR SHALL FIELD MARK SERVICE EQUIPMENT IN ACCORDANCE WITH NEC 110.24 IN REGARD TO MAXIMUM AVAILABLE FAULT CURRENT. MARKING SHALL CLEARLY DENOTE MAXIMUM AVAILABLE FAULT CURRENT AND INCLUDE THE DATE THE FAULT CURRENT CALCULATION WAS PERFORMED. DIVISION 26 SHALL BE RESPONSIBLE FOR OBTAINING AVAILABLE FAULT CURRENT AT TRANSFORMER FROM LOCAL UTILITY. PERFORM CALCULATIONS BASED ON SUCH.
4. SEE DETAIL 1/E6.0 FOR SERVICE GROUNDING AND BONDING PLATE DETAIL.
5. 400A, 3 POLE SERVICE ENTRANCE RATED DISCONNECT FUSED DOWN TO 225A. DISCONNECT SHALL BE NEMA 4X RATED. PROVIDE WITH NEUTRAL BAR AND EQUIPMENT GROUND BAR. INSTALL BONDING JUMPER AT DISCONNECT.
6. 1 1/4"C., TO REMOTE GENERATOR ANNUNCIATOR SEE MANUFACTURER'S PUBLISHED DATA FOR NUMBER OF CONDUCTORS REQUIRED. SEE SHEET E3.1 FOR LOCATION OF ANNUNCIATOR.
7. 2-1"C., TO AUTOMATIC TRANSFER SWITCH FOR CONTROL WIRES
8. 225A, 3 POLE, NEMA 4X, SOLID NEUTRAL TIME DELAYED AUTOMATIC TRANSFER SWITCH.
9. NEW WEATHERHEAD TO BE PROVIDED AND INSTALLED BY DIVISION 26. 10' OF SLACK CONDUCTORS SHALL BE PROVIDED FOR UTILITY COMPANY TO CONNECT TO POLE MOUNTED UTILITY TRANSFORMER.
10. CHEMICAL INJECTOR PUMP TO BE POWERED BY 120V RECEPTACLE. SEE SHEET E3.1 FOR CONNECTION REQUIREMENTS. TYPICAL FOR ALL PUMPS CONNECTED TO CONTROL PANEL.

SPD SCHEDULE

TYPE	DESCRIPTION	NOTES
1	MAIN DISTRIBUTION PANEL (277/480 VOLTS, 3 PHASE) - 300,000 AMP RATED	1
2	DISTRIBUTION PANEL (120/208 VOLTS, 3 PHASE) - 80,000 AMP RATED	1

SCHEDULE NOTES:

1. SEE SPECIFICATIONS FOR DETAILS.

FEEDER SCHEDULE

DESIGNATION	CONDUIT & CONDUCTORS
20A-3G	3/4" C - 2#12, 1#12G
20A-4G	3/4" C - 3#12, 1#12G
30A-4G	1" C - 4#10, 1#10G
50A-3G	1" C - 3#8, 1#10G
50A-4G	1" C - 4#8, 1#10G
100A-4BJ	2" C - 4#2, 1#8G
225A-4	2.5" C - 4#4/0
225A-4G	2.5" C - 4#4/0, 1#4G
CAT6	2" C - CAT6 CABLE
STP - 1	3/4" C -SHIELDED TWISTED PAIR
STP - 2	[2] 3/4" C -SHIELDED TWISTED PAIR

200A - 4 G - N FEEDER DESIGNATION

- (N) - INDICATES 200% NEUTRAL CONDUCTOR
- GROUND CONDUCTORS:
  - (0) - NO GROUND
  - (G) - EQUIPMENT OR ISOLATED GND
  - (BJ) - GROUNDING ELECTRODE
  - (BJIG) - GROUNDING ELECTRODE AND ISOLATED GND
- SYSTEM DESCRIPTION:
  - (3) - 1Ø 3W OR 3Ø 3W
  - (4) - 3Ø, 4W
- CONDUCTOR AMPACITY:
  - (AL) - INDICATES ALUMINUM CONDUCTORS

EDC
ELECTRICAL DESIGN CONSULTANTS
ELECTRICAL ENGINEERS
AUGUSTA OFFICE - PROJECT #: 25173
edc1973.com

ESG ENGINEERING
6400 Peake Rd
Macon, GA 31210
Ph.: (478) 474-4696
Fax: (478) 474-5045

GROUNDWATER WELLS #4 & #5

FOR THE
CITY OF FLOWERY BRANCH

REVISIONS

NO.	DESCRIPTION	DATE
3	REV 3	12-10-25

PERMIT SET

GEORGIA REGISTERED NO. 038816 PROFESSIONAL ENGINEER JONATHAN W. NEWLIN

DRAWN BY: CT
CHECKED BY: BN
DATE: OCT 2025
SCALE: AS SHOWN

CONTENT:
POWER RISER DIAGRAM

SHEET NO:
E5.1

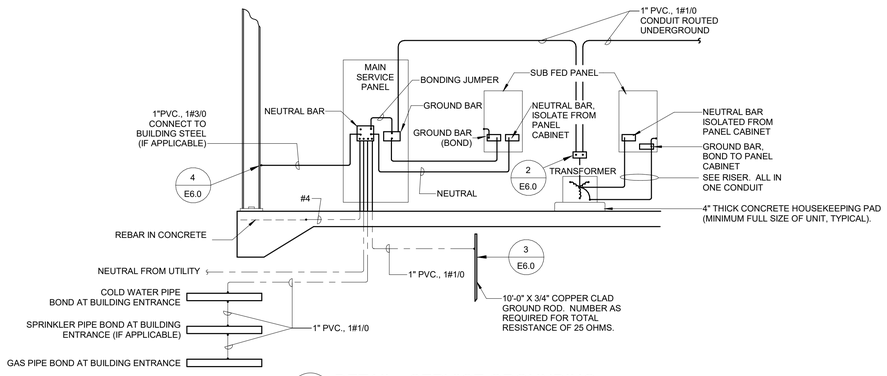

1 E6.0 DETAIL - SERVICE GROUNDING
NO SCALE

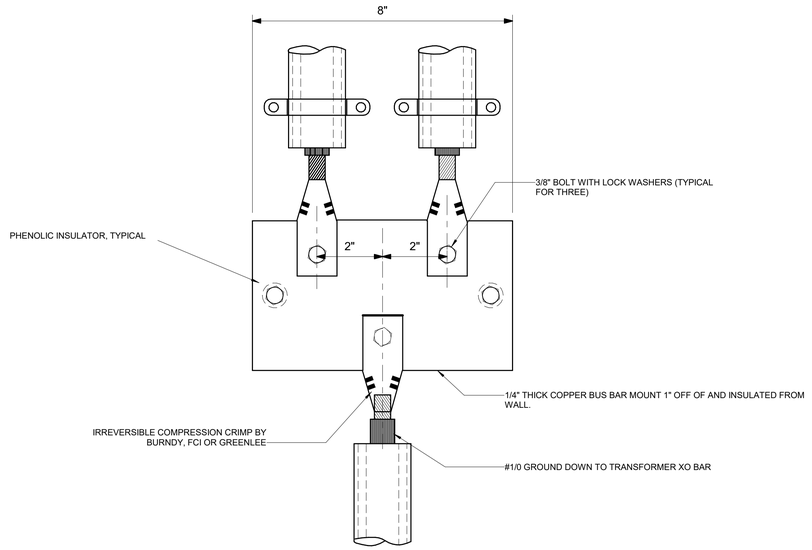

2 E6.0 DETAIL - GROUND CABLE TO BUS BAR
NO SCALE

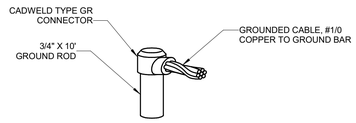

3 E6.0 DETAIL - CABLE CONNECTION TO GROUND ROD
NO SCALE

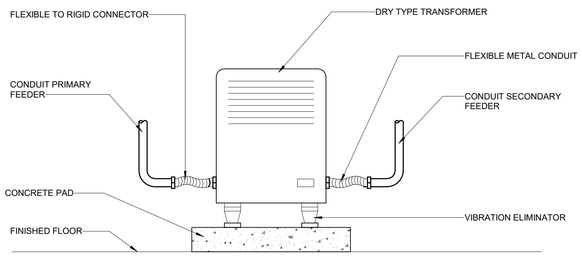

5 E6.0 DETAIL - FLOOR MOUNTED TRANSFORMER
NO SCALE

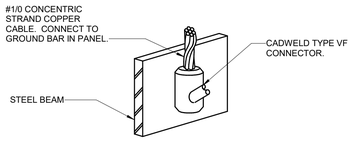

4 E6.0 DETAIL - CABLE CONNECTION TO STEEL BEAM
NO SCALE

ESG ENGINEERING
6400 Peake Rd
Macon, GA 31210
Ph.: (478) 474-4996
Fax: (478) 474-5045

GROUNDWATER WELLS #4 & #5

FOR THE
CITY OF FLOWERY BRANCH

REVISIONS

NO.	DESCRIPTION	DATE
3	REV 3	12-10-25

PERMIT SET

GEORGIA REGISTERED NO. 038816 PROFESSIONAL ENGINEER BRYAN W. NEWLAND

DRAWN BY: CT
CHECKED BY: BN
DATE: OCT 2025
SCALE: AS SHOWN

CONTENT:
ELECTRICAL DETAILS

SHEET NO:
E6.0

EDC
ELECTRICAL DESIGN CONSULTANTS
ELECTRICAL ENGINEERS
AUGUSTA OFFICE - PROJECT #: 25173
edc1973.com

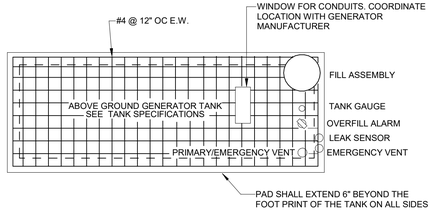

1 E6.1 DETAIL - GENERATOR CONCRETE PAD AND FUEL TANK - PLAN VIEW
NO SCALE

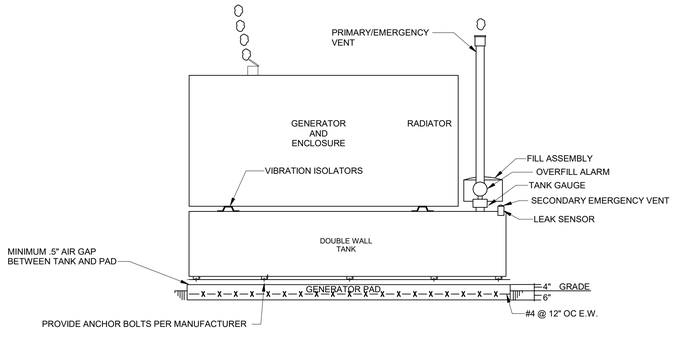

TANK SPECIFICATIONS

PRIMARY TANK SHALL BE MINIMUM 10 GAUGE STEEL, UL142 LABEL AND HAVE THE FOLLOWING:

- FUEL SUPPLY AND FUEL RETURN OPENINGS (1" NPT MINIMUM EACH)
- *NORMAL (PRIMARY) TANK VENT OPENING ON PRIMARY TANK (2" NPT MINIMUM)
- *EMERGENCY PRESSURE RELIEF (SECONDARY) VENT OPENING SIZED PER NFPA 30
- OPENING FOR LOW LEVEL AND HIGH LEVEL FUEL ALARM SWITCHES (2"NPT MINIMUM)
- MECHANICAL FUEL GAUGE OPENING (1.5" NPT MINIMUM)
- STICK PORT OPENING (1.5" NPT MINIMUM)
- TANK FILL BUNG (2" NPT MINIMUM)

SECONDARY TANK SHALL HAVE THE FOLLOWING:

- MONITORING PORT ON INTERSTICE OF SECONDARY TANK (2" NPT MINIMUM)
- *EMERGENCY PRESSURE RELIEF (SECONDARY) VENT OPENING SIZED PER NFPA 30

* PRIMARY AND EMERGENCY SECONDARY TANK VENTS SHALL BE EXTENDED OUTSIDE OF THE GENERATOR ENCLOSURE AND TERMINATE AT A MINIMUM HEIGHT OF (12) FEET ABOVE GRADE

FILL ASSEMBLY:

- TANK FILL CONNECTION SHALL BE A CAM LOCK STYLE TIGHT FILL WITH AN OVERFILL PREVENTION VALVE (CLAY & BAILEY MINO #1228 OR APPROVED ALTERNATE) SET TO STOP FLOW OF FUEL WHEN THE TANK REACHES 95% OF TANK CAPACITY. THE FILL SHALL ALSO INCLUDE A SPILL CONTAINMENT BUCKET (EBW MODEL # 706-420-01) AND SHALL BE LOCATED SUCH THAT THE DELIVERY OPERATOR HAS DIRECT ACCESS TO THE TANK GAUGE

TANK GAUGING:

- A MECHANICAL DIRECT READING TYPE OF FUEL LEVEL GAUGE INDICATOR SHALL BE PROVIDED IN ADDITION TO ANY ELECTRONIC MONITORING SYSTEM. THE FUEL LEVEL INDICATOR SHALL BE A ROCHESTER GAUGES SERIES 6500 SENIOR GAUGE OR APPROVED ALTERNATE AND SHALL BE MOUNTED SO THAT THE DELIVERY OPERATOR HAS DIRECT ACCESS TO IT

LEAK AND OVERFILL ALARMS:

- A LIQUID SENSOR SHALL BE MOUNTED INSIDE THE SECONDARY TANK AND WIRED TO THE GENERATOR CONTROL PANEL. SENSOR SHALL BE INCON TSP-ULS OR APPROVED ALTERNATE
- A REMOTE OVERFILL BATTERY OPERATED ALARM HORN (MORRISON BROTHERS 918TCP OR APPROVED ALTERNATE) SHALL BE PROVIDED AND ALARM WHEN TANK REACHES 90% CAPACITY AND SHALL BE MOUNTED SO THAT THE DELIVERY OPERATOR HAS DIRECT ACCESS TO IT

SIGNAGE:

- TANK SHALL BE LABELED WITH FUEL TYPE AND CAPACITY. LABEL SHALL BE 2" WHITE LETTERS ON BLACK BACKGROUND AND ATTACHED TO THE TANK WITH ADHESIVE

ACCESSORIES:

- EMERGENCY VENT SHALL BE OPW 202 OR EQUAL SIZED BY TANK MANUFACTURER PER NFPA 30
- DIELECTRIC COUPLINGS AND/OR FLANGED KITS SHALL BE PROVIDED AT ALL COPPER TO STEEL CONNECTIONS AND AS REQUIRED TO ISOLATE THE PIPING FROM THE TANK.

2 E6.1 DETAIL - GENERATOR CONCRETE PAD - SIDE VIEW
NO SCALE

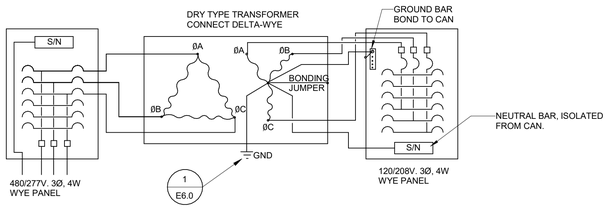

4 E6.1 DETAIL - DRY TYPE TRANSFORMER CONNECTION
NO SCALE

FOR 120/208V PANELS:

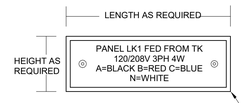

NOTE: DESIGNATIONS ARE FOR REFERENCE ONLY. LABELING SHALL BE OF EQUIPMENT BEING SERVED.

FOR 277/480V PANELS:

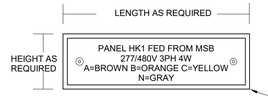

FOR TRANSFORMERS:

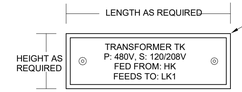

FOR DISCONNECTS:

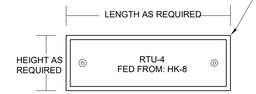

POWER LABEL SHALL BE: BLACK PHENOLIC PLATE WITH ENGRAVED WHITE LETTERING, POP RIVETED TO EQUIPMENT

3 E6.1 IDENTIFICATION TAG DETAIL
NO SCALE

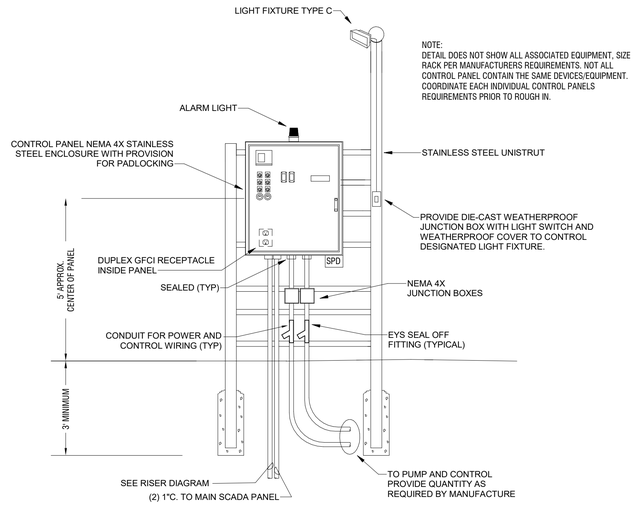

5 E6.1 DETAIL - TYPICAL CONTROL PANEL RACK DETAIL
NO SCALE

EDC
ELECTRICAL DESIGN CONSULTANTS
ELECTRICAL ENGINEERS
AUGUSTA OFFICE - PROJECT #: 25173
edc1973.com

ESG ENGINEERING
6400 Peake Rd
Macon, GA 31210
Ph: (478) 474-4995
Fax: (478) 474-5045

GROUNDWATER WELLS #4 & #5

FOR THE
CITY OF FLOWERY BRANCH

REVISIONS

NO.	DESCRIPTION	DATE
3	REV 3	12-10-25

PERMIT SET

GEORGIA REGISTERED NO. 038816 PROFESSIONAL ENGINEER BRYAN W. NEWLAND

DRAWN BY: CT
CHECKED BY: BN
DATE: OCT 2025
SCALE: AS SHOWN

CONTENT:
ELECTRICAL DETAILS

SHEET NO:
E6.1

PLUMBING SPECIFICATIONS

Provide all plumbing items indicated on the drawings, described herein or otherwise required for a complete and proper installation, including:
A. Plumbing fixtures, fittings and equipment.
B. Hot and cold water systems.
C. Drain waste and vent piping systems.
D. Indirect waste piping, including all valves, traps, piping and accessories for all equipment. Size per equipment requirements.

Comply with all applicable codes, standards and ordinances, including requirements of the Georgia State Minimum Standard Plumbing Code (2018 International Plumbing Code with all Georgia State Amendments), Georgia State Minimum Standard Gas Code (2018 International Gas Code with all Georgia State Amendments), Georgia State Minimum Standard Energy Code (2015 International Energy Conservation Code with all Georgia State supplements and Amendments), and the DOJ 2010 ADA Standards for Accessible Design with Georgia Amendments of Rule 120-3-20.

The contractor should not attempt to precisely scale dimensions from these drawings to obtain construction dimensions and clearance. The contractor shall verify all actual dimensions and clearances. Although these plans are diagrammatic in nature, they shall be followed as closely as site conditions, new construction, and work by other trades shall permit. Deviations from these drawings, which are required to conform to the available space or to actual building construction, shall be made at no additional cost to the owner.

The submission of a bid or proposal will be construed as evidence that the contractor has familiarized himself with the plans and building site. Claims made subsequent to the proposal for materials and/or labor due to difficulties encountered will not be recognized unless these difficulties could not have been foreseen, even though proper examination had been made.

Fabrication or ordering of any material or equipment prior to verification of site conditions shall be done at the contractor's risk.

All equipment and material shall be new and of first quality. Equipment and material shall be the same or equal to the basis of design listed on these drawings.

Coordinate with all trades and verify all equipment rough-in items and locations with the equipment supplier or contractor. All re-work and corrections required due to lack of coordination shall be the contractor's responsibility, and done at no cost to the owner.

Submit shop drawings and material data submittals to the engineer for approval before installation. No substitutions shall be allowed without prior approval by the engineer. Product data for piping, insulation, valves, specialties and all fixtures and equipment scheduled and specified here. For each submittal for review, allow 15 days excluding delivery time to and from the Contractor.

All equipment and flue materials shall be U.L. listed.

Installation shall comply with manufacturer requirements including all clearances recommended for proper operation of service. All serviceable parts shall be readily accessible.

Sanitary drain, roof drainage and vent piping shall be ASTM D2665 schedule 40 PVC with PVC Socket Fittings (ASTM D 2665, made to ASTM D 3311, drain, waste, and vent patterns and to fit Schedule 40 pipe). Slope pipe sizes 6" and under at 1/8 inch per foot continuously toward public sewer. Slope pipe sizes 8" and larger at 1/16 inch per foot continuously toward public sewer. All aboveground piping shall be adequately supported. Install underground, PVC plastic drainage piping according to ASTM D2321. Install aboveground PVC piping according to ASTM D 2665. Cellular Core PVC (Foam Core PVC) not acceptable. Provide PVC IPEX type 1 expansion joints on alternating floors on horizontal sewer, storm, and vent risers over 30 feet tall.

Insulate aboveground floor drains, traps, and sanitary drain piping within 10 feet of drain receiving condensate and equipment drain water below 60° with 1" thick type i performed glass-fiber pipe insulation, 1-1/2" cellular glass, or 1" flexible elestomeric.

All above ground domestic water distribution piping shall be ASTM D 2846, SDR11, schedule 40 CPVC with socket fittings. All piping shall be adequately supported. Disinfect all domestic water piping after installation. All underground domestic water distribution piping 1" and smaller shall be ASTM D 876 & ASTM F 877 PEX with no fittings underground. All underground domestic water distribution piping 1-1/4" and larger shall be ASTM D 1785 schedule 40 PVC with ASTM D 2466 PVC socket fittings. Wrap piping larger than 2" in return air plenums with fire barrier plenum rated wrap.

Chemical waste piping shall be Charlotte pipe Chemdrain CPVC chemical waste schedule 40 drainage dipe and fittings.

DOMESTIC WATER PIPING CLEANING

A. Clean and disinfect potable domestic water piping as follows:
   1. Purge new piping and parts of existing piping that have been altered, extended, or repaired before using.
   2. Use purging and disinfecting procedures prescribed by authorities having jurisdiction; if methods are not prescribed, use procedures described in either AWWA C651 or AWWA C652 or follow procedures described below:
      a. Flush piping system with clean, potable water until dirty water does not appear at outlets.
      b. Fill and isolate system according to either of the following:
         1) Fill system or part thereof with water/chlorine solution with at least 50 ppm (50 mg/L) of chlorine. Isolate with valves and allow to stand for 24 hours.
         2) Fill system or part thereof with water/chlorine solution with at least 200 ppm (200 mg/L) of chlorine. Isolate and allow to stand for three hours.
      c. Flush system with clean, potable water until no chlorine is in water coming from system after the standing time.
      d. Repeat procedures if biological examination shows contamination.
      e. Submit water samples in sterile bottles to authorities having jurisdiction.
B. Prepare and submit reports of purging and disinfecting activities. Include copies of water-sample approvals from authorities having jurisdiction.
C. Clean interior of domestic water piping system. Remove dirt and debris as work progresses.

Domestic water piping shall be insulated with Owens Corning type ASJ/SSL-II heavy density fiber glass with all service jacket. Insulation shall have a flame spread rating not to exceed 25 and a smoke density not to exceed 50 when tested in accordance with U.B.C. standard 42-1. Provide mastic on all joints and exposed ends of insulation. Insulate domestic Cold water piping in unconditioned spaces such as exterior corridors, attic, basements, etc with 1/2" thick insulation for piping 1-1/4" & smaller and 1" thick insulation for piping 1-1/2" & larger. Insulate all domestic Hot water supply and return piping with 1" thick insulation for piping 1-1/4" & smaller and 1-1/2" thick insulation for piping 1-1/2" & larger.

HW & CW Valves: Use pipe size valves, as shown below:
A. Ball: Spears CPVC True Union.
B. Check: Spears CPVC True Union.

Lavatory/ Sink supply fittings: NSF Standard: Comply with NSF/ANSI 61 Annex G, "Drinking Water System Components – Health Effects," for supply-fitting materials that will be in contact with potable water. Standard: ASME A112.18.1/CSA B125.1. Supply Stops: Chrome-plated-brass, one-quarter-turn, ball-type valve with inlet connection matching supply piping. Wheel handle operation. Risers: Chrome-plated, soft-copper flexible tube for exposed applications and ASME A112.18.6, braided- or corrugated-stainless-steel, flexible hose for conceal behind cabinet applications.

Provide ADA Supply and Drain Protective Shielding Guards on ADA fixtures that piping is exposed. Supply and Drain Protective Shielding Guards shall comply with ICC A117.1 and Americans with Disabilities Act (ADA) requirements. Manufactured plastic wraps shall cover hot and cold water supplies, trap, and drain piping.

All pipe hangers, clamps and channels shall be adequately sized to carry pipe loads and prevent sagging.

All other materials not specifically described but required for a complete and proper installation of work of this section, shall be new, first quality of their respective kinds, and as selected by the contractor subject to acceptance by the engineer.

Lay out the plumbing system in careful coordination with the drawings, determining proper elevations for all components of the system and using only the minimum number of bends to produce a satisfactorily functioning system. Follow the general layout shown on the drawings in all cases except where other work may interfere. Unless shown otherwise, lay out all pipes to fall within partition, wall floor, or roof cavities, and to not require furring other than as shown on the drawings.

Do not cut into or reduce the size of any load-carrying member without the prior approval of the architect. Install all pipes to clear all beams and obstructions.

Extend all plumbing vents above roof to parapet height.

Permanently close and make weatherproof any openings or penetrations of the building envelope made for plumbing systems. All wall and floor penetrations shall be sleeved. All exterior wall or foundation wall penetrations shall use a mechanical seal.

Coordinate all roof penetrations with architectural plans and building and roofing trades.

Provide shut-off balls valves and unions at all water connections to equipment and appliances.

Isolate all dissimilar metals with "EPCO" dielectric unions, except for brass or bronze valves with steel pipe.

Protect the potable water supply against backflow and siphonage from equipment, fixtures, etc., using approved backflow and anti-siphon devices.

Thoroughly clean all piping and equipment. Removing all dirt, rust, oil, and plaster.

Test Sanitary and storm drainage piping by plugging all openings and filling with water to a height equal to a 10 foot head. Allow to stand one hour or longer as required. Repair leaking joints and then re-test.

No work shall be covered until it has been inspected and accepted by the local authority.

Domestic water piping tests: Fill domestic water piping. Check components to determine that they are not air bound and that piping is full of water. Test for leaks and defects in new piping and parts of existing piping that have been altered, extended, or repaired. Leave new, altered, extended, or replaced domestic water piping uncovered and unconcealed until it has been tested and approved. Expose work that was covered or concealed before it was tested. Cap and subject piping to static water pressure of 50 psig (345 kPa) above operating pressure, without exceeding pressure rating of piping system materials. Isolate test source and allow it to stand for four hours. Leaks and loss in test pressure constitute defects that must be repaired. Repair leaks and defects with new materials, and retest piping or portion thereof until satisfactory results are obtained.

The entire system shall be warranted for a period of one (1) year beginning with Owner's acceptance of the work. All labor and materials necessary to repair or replace the system, or portions thereof, during that time shall be warranted for a period of one (1) year from the repair or replacement.

Install piping in concealed locations, unless otherwise indicated and except in equipment rooms, and service areas. Install piping indicated to be exposed and piping in equipment rooms and service areas at right angles or parallel to building walls. Diagonal runs are prohibited unless specifically indicated otherwise. Install piping above accessible ceilings to allow sufficient space for ceiling panel removal. Install piping to permit valve servicing. Install piping at indicated slopes. Install piping free of sags and bends. Install fittings for changes in direction and branch connections. Install piping to allow application of insulation. Select system components with pressure rating equal to or greater than system operating pressure. Install escutcheons for penetrations of walls, ceilings, and floors. Verify final equipment locations for roughing-in.

Confirm that millwork is constructed with adequate provision for the installation of counter top lavatories and sinks.

Seal fixtures to wall and floor surfaces with sealant, color to match fixture.

All vents thru roof (VTR) shall be offset a minimum of 10'-0" from all outside air intakes.

Provide Plastic Pipe Markers on all aboveground plumbing piping that Comply with ASME A13.1. Minimum information indicating flow direction arrow and identification of fluid being conveyed. Install labeling on pipe at intervals of not more than 20 feet and at least once in each room.

Provide a complete through penetration fire stopping assembly for fire resistance rated wall assemblies. The through penetration assembly must be listed by an approved third-party test agency (UL), and include the entire listed assembly with all notations. Refer to architectural drawings for fire wall locations.

Approved manufactures: (Items submitted shall be approved by architect and engineer. Architect and engineer reserve the right to reject any item substituted for basis of design item for any reason.)

Supplies & Traps: Engineered Brass CO., Mcguire, Charlotte Pipe, Brasscraft, IPS, Watts, Zurn
Floor Drains & Cleanouts: Zurn, Jay R Smith, Proset, Watts, Mifab, Wade, Josam, Sioux Chief, Oatey
Tankless Electric Water Heaters: A.O. Smith, Rheem, EEmax, Chronomite
Wall Hydrants/ Hose Bibbs: MIFAB, Jay R. Smith, Wade, Watts, Woodford, Zurn
CPVC Valves: American, NIBCO, Spears
Mop Sinks: Stern Williams, Acorn, Fiat
Wash Fountains: Acorn, Willoughby, Bradley
Eyewash: Stingray, Guardian, Acorn, Bradley, Haws, Speakman

FIXTURE AND EQUIPMENT SCHEDULE

#	FIXTURE TYPE	WASTE		WATER SUPPLY		WATER FIX. CONN.		MODEL NUMBER
		BELOW FLOOR	FIXTURE CONN.	COLD	HOT	COLD	HOT	
ESS	COMBINATION DRENCH SHOWER AND EYE/FACE WASH				1-1/4"		1-1/4"	ULINE H-10735
NFWH	BACKFLOW PROTECTED AUTOMATIC DRAINING FREEZELESS HOSE BIBB			3/4"		3/4"		PRIER C-634
RPZ	REDUCED PRESSURE ZONE ASSEMBLIES			SEE DWGS.		SEE DWGS.		WATTS LF009.
FD	FLOOR DRAIN WITH WATERLESS TRAP PRIMER	SEE DWGS	SEE DWGS					ZURN Z730
GCO	GRADE CLEANOUT	SEE DWGS	SEE DWGS					WATTS CO-200-RX-4-60.
MOP	MOLDED HIGH-DENSITY COMPOSITE BASIN							PFMB2424

CONTRACTOR SHALL COORDINATE WITH CIVIL SHEET C9.2 & C9.1 AND ARCHITECT BEFORE ORDERING FIXTURES

WATER HEATER SCHEDULE

MARK	MANUFACTURER	MODEL NUMBER	TYPE	TURN ON (GPM)	KW	PHASE	VOLTAGE
WH	EEMAX	PRO SERIES XTP054480	TANKLESS ELECTRIC	0.5	54.0	3	480

NOTE: PROVIDE CORROSION RESISTANCE N4X6 CABINET

LEGEND

	BALL VALVE		COLD WATER
	CHECK VALVE		HOT WATER
	PIPE UP		SEWER
	PIPE DOWN	CW	COLD WATER
F.F.E.	FINISHED FLOOR ELEVATION	HW	HOT WATER
(TYP)	TYPICAL		STRAINER
N.T.S.	NOT TO SCALE	PDI-B (H)	PDI UNIT WATER HAMMER ARRESTOR

ESG ENGINEERING

GROUNDWATER WELLS #4 & #5
FOR THE
CITY OF FLOWERY BRANCH

REVISIONS

NO.	DESCRIPTION	DATE
2	ADDENDUM 2	

GEORGIA REGISTERED PROFESSIONAL ENGINEER KRUNAL M PATEL

DRAWN BY: KMP
CHECKED BY: KMP
DATE:
SCALE:

CONTENT:

PLUMBING SCHEDULES & SPECIFICATIONS

SHEET NO:

P0.1

TOTAL ENGINEERS
169 New Street, Macon, GA 31201
(478)741-4632 - T.E. project # 25-101
www.totalengineers.com
GA COA NO # PEF009195 EXP: 06/30/2026

Last Saved By: Owner
Plotted: 12/11/2025 10:53 AM
Drawing Path: Z:\2025\101 Well Project Chem Feed Building Flowery Branch, GA\DRAWINGS\TE\25-101 PLUMBING.dwg

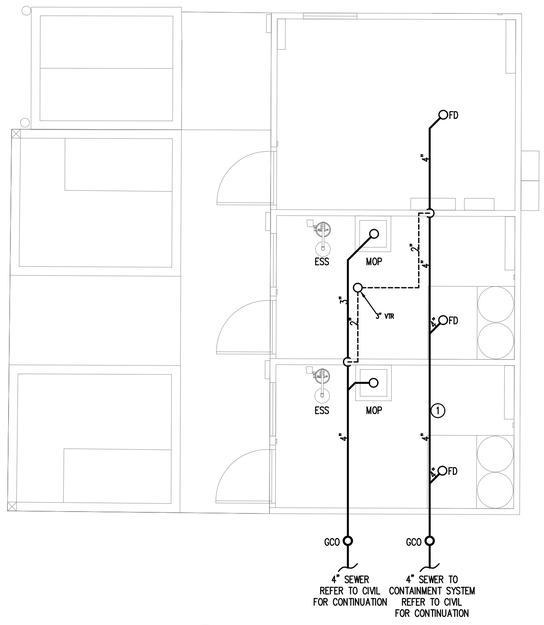

1 PLUMBING PLAN - SEWER
SCALE: 1/4"=1'-0"

KEY NOTES(THIS SHEET ONLY):

1. CONTRACTOR SHALL AVOID ALL HELICAL PILES AND FOOTERS FOR UNDERGROUND PLUMBING. TYPICAL FOR ALL UNDERGROUND PLUMBING.
2. DOMESTIC WATER LINES SHALL BE AFFIXED TO WALL OR HUNG FROM CEILING. TYPICAL FOR ALL PLUMBING PIPES.

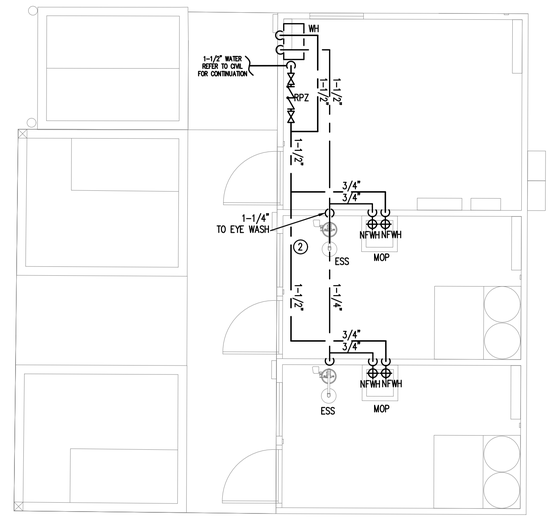

2 PLUMBING PLAN - WATER
SCALE: 1/4"=1'-0"

TOTAL ENGINEERS
169 New Street, Macon, GA 31201
(478)741-4632 - T.E. project # 25-101
www.totalengineers.com
GA COA NO # PEF009195 EXP: 06/30/2026

ESG ENGINEERING

GROUNDWATER WELLS #4 & #5

FOR THE
CITY OF FLOWERY BRANCH

REVISIONS

NO.	DESCRIPTION	DATE
2	ADDENDUM 2	

GEORGIA REGISTERED PROFESSIONAL ENGINEER KRUNAL M PATEL

DRAWN BY: KMP
CHECKED BY: KMP
DATE:
SCALE:

CONTENT:

PLUMBING PLANS

SHEET NO:

P1.0

Last Saved By: Owner
Plotted: 12/11/2025 10:53 AM
Drawing Path: Z:\2025\101 Well Project Chem Feed Building Flowery Branch, GA\DRAWINGS\TE\25-101 PLUMBING.dwg

ADDENDUM #3
December 15, 2025

PROJECT: ***Groundwater Wells #4 & #5***

OWNER: City of Flowery Branch

BID DATE: Original Bid Date – Thursday, December 18, 2025 at 2:00 P.M.
Revised Bid Date (Per Addendum #3) – Thursday, January 15, 2026 at 2:00 PM ET

The Bidder is hereby provided the following information:

1. **MISCELLANOUS INFORMATION**

   a. The Bid date has been moved to Thursday, January 15, 2026 at 2:00 PM ET.

   b. Contractor shall include in their Bid the cost to engage the services of a controls system integrator to complete the work as shown and described below:

      i. Contractor shall employ the services of an experienced control systems integrator (CSI) to provide SCADA improvements at the new well site PLC and within the existing City Telemetry SCADA system (at the wastewater treatment plant) and in the existing RTU/panel at the existing/offsite booster station.

      ii. The City's current booster pumps run off a SCADA-read, pressure gauge signal transmitted via radio that is correlated to elevated tank level (booster pumps turn on when tank level = 7' below full and turn off when tank level = 1' below full).

      iii. At the new well site the Contractor shall utilize Southern Flow Inc. from Alpharetta, GA to provide a new Remote Telemetry Unit with a Programmable Logic Controller (PLC) capable of receiving I/O's and relays from the new submersible well pumps, new flow meters, and from the offsite pressure gauge signal (radio). The new system shall be capable of starting the new well pumps at an operator-specified tank level (such as 6' below full), and the pumps shall run for either a set duration, time of day, or until a totalized flow has been accumulated (such as 50,000 gpd, per the proposed flow meters). The new well pumps shall alternate operations such that both the Waterstone and Henderson pumps do not run concurrently, and the new well pumps shall not run while the existing offsite booster pumps are running. Contractor/CSI shall incorporate new

relays from the new well pumps, new flow meters, and new relays from the existing booster station into the City's existing SCADA system.

iv. The new RTU shall be based on Modicon M340 and communicate via cellular to the Wastewater Treatment Plant. The RTU shall be comprised of the following:

Remote Telemetry Unit (RTU)
Enclosure:
Nema 12 Painted Carbon Steel Enclosure
Enclosure Subpanel
Custom Shelf for Cellular Modem
PLC:
Modicon M340 CPU 24 VDC supply Ethernet port
24 VDC Power Supply
6-slot rack (recommended for expansion)
8-channel Analog Input
4-channel Analog Output
16-Channel Discrete Input
16-Channel Discrete Output
Power Supply and UPS:
24VDC Panel Power Supply and UPS shall be provided.
Communication Equipment:
Sierra Wireless Cellular Modem XR60 Modem Provisioning including Modem Setup with Carrier Activation, Testing and Labeling
Misc:
Isolation Relays & Sockets (on all Discrete Inputs and on 6 Discrete Outputs)
Surge Board Arrestors for all Analog Signals
Fuse Blocks with Indicators
Circuit Breakers
Wire Terminals
Wire Duct
Intrusion Switch

v. **Existing Booster Pump Station Modifications:**

At the existing Booster Pump Station (Roberts Dr ground storage tank site), the System Integrator shall modify the Programming and physical I/O if necessary to incorporate the required interlocks described above to prevent the different well sites from operating at the same time as described above.

vi. **Existing SCADA System Modifications at the Wastewater Treatment Plant**

The System Integrator shall provide and install a Sierra Wireless Cellular Modem at the Wastewater Treatment Plant, as well as any other antennas and accessories necessary to communicate to the new Well site RTU. The existing Wonderware HMI shall be modified to include the well site and the functionality above including the interlocks and the pressure transmitter at the existing BPS.

vii. **Compatibility**

The System Integrator shall ensure the new cellular based RTU is compatible with the existing radio based telemetry system and existing SCADA HMI to provide reliable control and operator interface for the City of Flowery Branch.

Contractor shall include all associated costs for the above-described work, including labor, materials, tools, testing, equipment, hauling/freight, transportation, coordination, overhead/profit, etc. under the line item in the Bid Form for SCADA & Controls Integration Work Complete. SCADA system integrator contact information: Jim Bercik (Southern Flow Inc.), 470-443-9660, (jbercik@southernflowinc.com).

c. Both the Henderson & Waterstone submersible well pumps will be controlled via soft starters, **not** variable frequency drives (VFD). See electrical plan sheets for detailed layout of conduit/wiring, equipment, and control panels.

d. Chemical feed building Finished Floor Elevation (FFE) is to be 1122.20.

e. Concrete support pads for HVAC equipment shall be constructed per the detail on Sheet C9.4 and be sized and placed according to the mechanical & electrical plans. Approximate dimensions for each of the three (3) pads: 3’x2’x6”.

2. CONTRACT DOCUMENTS, SECTION 00410 – BID FORM

a. A new Section 00410 – Bid Form has been issued – see attached.

3. TECHNICAL SPECIFICATIONS, SECTION 01025 – MEASUREMENT & PAYMENT

a. A new Section 01025 – Measurement & Payment has been issued – see attached.

4. CONSTRUCTION PLANS

a. See attached revised Construction Plan sheets:

- Construction detail sheet C9.3
- Plumbing plan sheet P0.1 & P1.0

All bidders shall acknowledge receipt of all addenda issued where indicated on the bid sheets. (Section 00410 – Bid Form, Page 2)

ATTENTION

ALL BIDDERS SHALL ACKNOWLEDGE RECEIPT OF ALL ADDENDA ISSUED WHERE INDICATED ON THE BID SHEETS. (SECTION 00410 – BID FORM, PAGE 2)

BIDDERS ARE MADE AWARE THAT IT IS THEIR RESPONSIBILITY TO VERIFY THAT ANY AND ALL ADDENDA HAVE BEEN RECEIVED PRIOR TO THE SUBMISSION OF THEIR BID. IN THE EVENT ANY BIDDER FAILS TO ACKNOWLEDGE RECEIPT OF ANY SUCH ADDENDA IN THE SPACE PROVIDED ON THE BID FORM, THEIR BID WILL BE CONSIDERED NONRESPONSIVE.

END ADDENDUM

SECTION 00410
BID FORM

PROJECT IDENTIFICATION:

Groundwater Wells #4 & #5

CONTRACT IDENTIFICATION AND NUMBER:

F0002.018

THIS BID IS SUBMITTED TO:

City of Flowery Branch
5410 Pine Street
Flowery Branch, GA 30542

THIS BID IS SUBMITTED FROM:

Bidder: _____

Address: _____

_____

Phone: _____

State of Georgia Business License No.: _____

1. The undersigned Bidder proposes and agrees, if this Bid is accepted, to enter into an agreement with Owner in the form included in the Contract Documents to perform and furnish all Work as specified or indicated in the Contract Documents for the Contract Price and within the Contract Time indicated in this Bid and in accordance with the other terms and conditions of the Contract Documents.

2. Bidder accepts all of the terms and conditions of the Advertisement or Invitation to Bid and Instructions to Bidders, including without limitation those dealing with the disposition of Bid security. This Bid will remain subject to acceptance for 60 days after the day of Bid opening. Bidder will sign and submit the Agreement with the Bonds and other documents required by the Bidding Requirements within fifteen days after the date of Owner's Notice of Award.

3. In submitting this Bid, Bidder represents, as more fully set forth in the Agreement, that:

(a) Bidder has examined copies of all the Bidding Documents and of the following Addenda (receipt of all which is hereby acknowledged):

Date	Addendum Number

(b) Bidder has familiarized itself with the nature and extent of the Contract Documents, Work, site, locality, and all local conditions and Laws and Regulations that in any manner may affect cost, progress, performance or furnishing of the Work.

(c) Bidder has studied carefully all reports and drawings of subsurface conditions and drawings of physical conditions which are identified in the Supplementary Conditions as provided in Paragraph 4.2 of the General Conditions, and accepts the determination set forth in Paragraph 4.2.1 of the Supplementary Conditions of the extent of the technical data contained in such reports and drawings upon which Bidder is entitled to rely.

(d) Bidder has obtained and carefully studied (or assumes responsibility for obtaining and carefully studying) all such examinations, investigations, explorations, tests and studies (in addition to or to supplement those referred to in (c) above) which pertain to the subsurface or physical conditions at the site or otherwise may affect the cost, progress, performance or furnishing of the Work as Bidder considers necessary for the performance or furnishing of the Work at the Contract Price, within the Contract Time and in accordance with the other terms and conditions of the Contract Documents, including specifically the provisions of Paragraph 4.2 of the General Conditions; and no additional examinations, investigations, explorations, tests, reports or similar information or data are or will be required by Bidder for such purposes.

(e) Bidder has reviewed and checked all information and data shown or indicated on the Contract Documents with respect to existing Underground Facilities at or contiguous to the site and assumes responsibility for the accurate location of

said Underground Facilities. No additional examinations, investigations, explorations, tests, reports or similar information or data in respect of said Underground Facilities are or will be required by Bidder in order to perform and furnish the Work at the Contract Price, within the Contract Time and in accordance with the other terms and conditions of the Contract Documents, including specifically the provisions of Paragraph 4.3 of the General Conditions.

(f) Bidder has correlated the results of all such observations, examinations, investigations, explorations, tests, reports and studies with the terms and conditions of the Contract Documents.

Bidder has given Engineer written notice of all conflicts, errors or discrepancies that it has discovered in the Contract Documents and the written resolution thereof by Engineer is acceptable to Bidder.

(g) This Bid is genuine and not made in the interest of or on behalf of any undisclosed person, firm or corporation and is not submitted in conformity with an agreement or rules of any group, association, organization or corporation; Bidder has not directly or indirectly induced or solicited any other corporation to refrain from bidding; and Bidder has not sought by collusion to obtain for itself any advantage over any other Bidder or over Owner.

(h) Bidder agrees to commence work under this Agreement on or before a date to be specified in a written "Notice to Proceed" of the Owner.

(i) Bidder accepts the provisions of the Agreement as to liquidated damages in the event of failure to complete the Work on time.

4. Bidder will complete the Work in accordance with the Contract Documents for the following price(s):

The Contractor is directed to Section 01025 “Measurement and Payment” for the methods and limits for payment to the Contractor for the pay items listed below:

(A) BASE BID: Groundwater Wells #4 & #5

BID FORM BEGINS ON PAGE 4

BID FORM					
ITEM NO	QTY	UNIT	DESCRIPTION	UNIT PRICE	TOTAL PRICE
1	80	CY	Rock Removal - Base	$ 75.00	$ 6,000.00
2	80	CY	Rock Removal - Premium		
3	1	LS	Clearing & Grubbing		
4	1	LS	Demolition		
5	1	LS	Groundwater Wells #4 & #5 Improvements Complete (see Section 01025 for limits and extents of payment under this line item)		
6	1	LS	SCADA & Controls Integration Work Complete		
7	1	LS	Diesel Generator Installation		
8	1	EA	3-Way Fire Hydrant Assembly		
9	1	EA	4” Gate Valve w/ Box & Cover		
10	1	EA	8” Gate Valve w/ Box & Cover		
11	50	LF	4" RJ DIP Water Main - Open Cut		
12	70	LF	4" RJ DIP Water Main - Horizontal Directional Drill		
13	1,580	LF	8" RJ DIP Water Main - Open Cut Cross-Country		
14	45	LF	8" RJ DIP Water Main - Open Cut Roads		
15	145	LF	8" DR-11 (DIPS) HDPE Water Main - Horizontal Directional Drill		
16	1	EA	2" Tapping Sleeve & Valve (incl. Valve Box & Cover)		
17	1	EA	6" Tapping Sleeve & Valve (incl. Valve Box & Cover)		
18	1	EA	Cut, Cap, & Abandon Ex. 2" Water Line		
19	5	EA	Longside Water Service Transfer		
20	1	LS	Traffic Control		

21	1	LS	Erosion & Sediment Control Complete		
22	1	LS	Landscaping Complete		
23	1	LS	Groundwater Wells #4 & #5 Rehabilitation Allowance	$ 115,000.00	$ 115,000.00
24	1	LS	Supplemental Work Allowance (SWA)	$ 100,000.00	$ 100,000.00
			TOTAL BASE BID AMOUNT:		

Bidder agrees to furnish all labor, materials, and equipment necessary to construct the **Groundwater Wells #4 & #5** for the City of Flowery Branch for the sum of

_____Dollars

($_____).

6. Bidder agrees that the Work will be substantially complete and ready for final payment in accordance with the completion time/dates provided in the Contract and any Addenda.

7. Bidder accepts the provisions of the Agreement as to liquidated damages in the event of failure to complete the Work within the times specified in the Agreement.

8. The following documents are attached to and made a condition of this Bid:
   a. Required Bid Security in the form of 5% of the Bid Total Price.

9. The undersigned further agrees that in case of failure on his part to execute the said contract and the Bond within fifteen (15) consecutive calendar days after written notice being given of the award of the contract, the check or bid bond accompanying this bid, and the monies payable thereon shall be paid into the funds of the Owner as liquidated damages for such failure, otherwise, the check or bid bond accompanying this proposal shall be returned to the undersigned.

10. Communications concerning this Bid shall be addressed to:
    ESG Engineering, LLC
    6400 Peake Rd
    Macon, GA 31210
    Attn: Rachael Crowell
    rcrowell@esgengineering.com

11. Terms used in this Bid which are defined in the General Conditions or Instructions to Bidders will have the meanings indicated in the General Conditions or Instructions to Bidders.

SUBMITTED on _____, 20____.

BIDDER: _____

BY: _____

TITLE: _____

STATE CONTRACTOR
LICENSE NO. _____

ADDRESS: _____

_____

_____

PHONE: _____

Seal: (if bid by a Corporation)

END OF SECTION

SECTION 01025
MEASUREMENT AND PAYMENT

PART 1 – GENERAL

1.01 SCOPE OF WORK

A. This Section describes the methods by which measurement will be made of the quantities for which payment will be made for the Project.

B. The Bid lists each item of the Project for which payment will be made. No payment will be made for any items other than those listed in the Bid.

C. Required items of work and incidentals necessary for the satisfactory completion of the work which are not specifically listed in the Bid, and which are not specified in this Section to be measured or to be included in one of the items listed in the Bid, shall be considered as incidental to the work and whose cost shall be included in the item of the Bidder's choice. All costs thereof, including Contractor's overhead costs and profit, shall be considered as included in the lump sum or unit prices bid for the various Bid items. The Contractor shall prepare the Bid accordingly.

D. Work includes furnishing all labor, equipment, tools and materials, which are not furnished by the Owner and performing all operations required to complete the work satisfactorily, in place, as specified and as indicated on the Drawings.

1.02 MEASUREMENT OF WORK

A. Measurement methods delineated in the individual specification sections complement the criteria of this section. In the event of conflict, the requirements of the individual specification section govern.

B. Work shall be measured by the Engineer or his representative with assistance from the Contractor prior to preparation of a payment request by the Contractor.

C. Unit quantities that are measured in place shall be measured as they are placed. The Contractor shall give the Engineer a minimum of two days' notice for making all required measurements.

D. Materials that must be measured as delivered shall be measured at the time of delivery by the Engineer or his representative; the Contractor shall provide sufficient advance notice so that such measurements can be made.

E. Work necessary for a complete and operational job, such as relocation of mailboxes

or fences, removal of trees, relocation of utilities, graveling / maintaining driveways and driving lanes, field engineering, clearing and grubbing, traffic control, etc., not specifically identified as a pay item shall be included in the unit price bid of the Bidder's choosing. No additional payments will be made for such activities.

1.03 ESTIMATED QUANTITIES

All estimated quantities for unit price items, stipulated in the BID FORM, or other Contract Documents, are approximate and are to be used as a basis for comparing the bids submitted for the Project. The actual amounts of work done and materials furnished under unit price items may differ from the estimated quantities. The basis of payment for work and materials will be the actual amount of work done and materials furnished. The Contractor agrees to make no claim for damages, anticipated profits or otherwise on account of any difference between the amounts of work actually furnished and the estimated amounts included in the BID FORM. The Contractor will not be paid for any work which exceeds the quantity set forth in the BID FORM without a change order issued before the work is performed unless specifically ordered in writing by the Engineer. The Contractor will provide assistance to the Engineer to check quantities and elevations when so requested.

1.04 MEASUREMENT OF QUANTITIES

A. Measurement by Weight – Concrete reinforcing steel, rolled or formed steel or other metal shapes will be measured by handbook weights. Welded assemblies will be measured by handbook or scale weight.

B. Measurement by Volume – Measured by cubic dimension using mean length, width and height or thickness.

C. Measurement by Area – Measured by square dimension using mean length and width or radius.

D. Linear Measurement – Measured by linear dimension, at the item centerline or mean chord.

E. Stipulated Sum/Price Measurement – Items measured by weight, volume, area, or linear means or combination, as appropriate, as a completed item or unit of the Work.

1.05 PROGRESS PAYMENTS

A. Progress payments shall be based on percentage of work complete for lump sum pay items and units installed for unit price pay items.

B. All items of Work not specifically listed in the Bid Schedule shall be considered incidental to the construction, and the cost of all such work and material shall be

included in the item of the Contractors choice.

C. All items listed for measurement and payment shall include all materials, labor, and equipment necessary to successfully and satisfactorily complete Work specified.

D. Payment – The Contractor will receive payment only for the items listed in the Bid Schedule of his contract, and no separate payments will be made for the work under any section of the Contract Documents except as provided for in the Bid Form. Where measurements are required to be made by the Engineer, for the payment of a pay item, the failure of the Contractor to give the adequate notification or failure of the Contractor to give the engineer assistance for the measurement shall result in the forfeiture of payment for the work or item which was not measured.

PART 2 – PRODUCTS

2.01 STORED MATERIALS

A. Partial payment shall be made for approved materials stored at the project site, provided invoices for said materials are furnished in accordance with payment request submittal and shop drawings for said materials have been approved.

PART 3 – EXECUTION

3.01 CLEARING & GRUBBING

A. Measurement: Measurement for Clearing & Grubbing shall be on a lump sum basis and shall include all clearing & grubbing required for the project site, including the wells site & along the proposed water main alignment.

B. Payment: Payment for Clearing & Grubbing shall be on the basis of the lump sum price provided in the BID FORM and includes clearing and grubbing for all areas shown in the plans where the proposed work conflicts with existing vegetation/trees, and includes all trimming, tree removal, clearing, grubbing, root raking, hauling, disposal, and all labor, materials, tools, and equipment required.

3.02 DEMOLITION

A. Measurement: Measurement for Demolition shall be on a lump sum basis.

B. Payment: Payment for Demolition shall be on the basis of the lump sum price provided in the BID FORM and includes the demolition/removal of all existing site features in conflict with the proposed improvements as shown on the Plans, and includes hauling, disposal, and all labor, materials, tools, and equipment required.

3.03 GROUNDWATER WELLS #4 & #5 IMPROVEMENTS COMPLETE

A. Measurement: Measurement for Groundwater Wells #4 & #5 Improvements

Complete shall be on a lump sum basis.

B. Payment: Payment for Groundwater Wells #4 & #5 Improvements Complete shall be on the basis of the lump sum price provided in the BID FORM. Payment shall include all ancillary labor, materials, tools, testing, hauling/transportation, mobilization, and equipment required for a complete and functional project, including but limited to:

- Site grading, including all import fill material and removal, hauling, and disposal of excess materials
- Landscaping
- Gravel access drive & well site pad (incl. Tensar geogrid & GAB)
- Concrete sidewalk/walking areas and external chemical storage areas
- Protective bollards
- Yard hydrant installation (incl. all valves, fittings, etc.)
- Asphalt parking area (incl. Tensar geogrid & GAB)
- Chain link security fencing & gates
- Two (2) Groundwater Wells construction
    - Grundfos submersible pumps
    - Cables, supports, brackets, centralizers, hardware, etc.
    - Electrical & controls improvements
    - Discharge piping, fittings, transitions/connections, valves, & well casing pipe
    - Pressure gauges
    - Well pump enclosures
    - Support slabs (incl. reinforcement, concrete, Tensar geogrid, & crushed stone)
    - All other ancillary and miscellaneous work required to install the groundwater wells in accordance with the Construction Plans and Spec. Sections 432133 & 02514
- Chemical feed building
    - Building foundation
        - Foundation installation per Structural plan
        - Pile design & stamped drawing per helical pile engineer
        - Helical pile installation
    - Prefabricated concrete structure installed per drawings
    - Interior & exterior wall and floor coating system per construction drawings
    - All Mechanical/HVAC improvements shown on the mechanical plan
    - All Electrical improvements (incl. wiring, conduits, equipment, etc.)
    - All interior/exterior lighting improvements
    - Domestic water service tap w/ meter, backflow preventer, & box

    - All plumbing fixtures/appurtenances/piping/fittings as shown in the plumbing plans
    - Discharge piping pressure gauge
    - Chemical feed system for fluoride & chlorine
        - Eight (8) Grundfos chemical feed pumps per Spec. Section 70001
        - Feed line tubing/piping, valves, fittings, saddle taps, injection quills, hardware, etc. per Section 70001
        - Raceway/chase box installation
    - Building sewer lines, cleanouts, and connection to existing san. sewer main
    - Chemical containment pallets & ramps
    - Ultrasonic flow meters
    - Flanged DI piping, fittings, & valves
    - Pipe supports
    - All pipe/conduit cores/penetrations (incl. coring, link seals, & grouting)
    - Gutters & downspouts
    - All other ancillary and miscellaneous work required to install the chemical feed building in accordance with Spec. Section 02513 & the applicable drawings
- Covered steel structure
    - Stamped engineering design plans and applicable fees
    - Foundation/footers per detail & note on Sheet C9.4
    - Steel structure/shelter installed per detail drawings
    - Gutters & downspouts
    - All other ancillary and miscellaneous work required to install the steel structure in accordance with Section 90001 and the applicable drawings (provided by Renegade)
- Isolated chemical spill containment system (incl. floor drains, piping, fittings, precast structures, and coatings/linings)
- All restrained joint & flanged ductile iron yard piping, fittings, & valves located up to and including the 8”x6” reducer located outside of the backflow vault (see Sheets C4.0 & C4.1)
- Riser blowoff/sampling piping
    - Tapping saddle, spigot, fittings/adaptors, etc.
    - Insulated enclosure
    - Crusher run bedding
- Exterior pipe insulation system
- All pipe coating/lining and painting
- Backflow installation
    - Double Check Detector Assembly (DCDA)
    - Pressure gauge

    - Pipe supports & blocking
    - Precast concrete vault
    - Access hatch
    - Ladder
    - Stone bedding & Tensar geogrid
    - Pipe, fittings, and valves (incl. coring, link seals, & grouting)
    - Drainage piping
- All electrical & controls materials, workmanship, equipment, coordination, implementation, testing, and ancillary items not furnished & installed by the utility provider (GA Power)
- All other ancillary and miscellaneous items required to provide a complete and functional project as shown and described in the Construction Plans, Details, and Specifications.

3.04 DIESEL GENERATOR INSTALLATION

A. Measurement: Measurement for Diesel Generator Installation shall be on a lump sum basis.

B. Payment: Payment for Diesel Generator Installation shall be on the basis of the lump sum price provided in the BID FORM and shall include the cost of the generator, concrete support slab, steel reinforcement, Tensar geogrid, crushed stone, grading of local area, all required electrical work/connections, transfer switch integration and all labor, materials, tools, testing, and hauling/freight required for a complete and functional installation.

3.05 SCADA & CONTROLS INTEGRATION WORK COMPLETE

A. Measurement: Measurement for SCADA & Controls Integration Work Complete shall be on a lump sum basis.

B. Payment: Payment for SCADA & Controls Integration Work Complete shall be on the basis of the lump sum price provided in the BID FORM and shall include the cost of all equipment, materials, and work shown and described in the SCADA/CSI Scope of Work, and all required off-site controls work integration/connections to the existing system(s), and all labor, materials, tools, testing, and hauling/freight required for a complete and functional SCADA system installation.

3.06 FIRE HYDRANT ASSEMBLY

A. Measurement: Measurement for Fire Hydrant Assembly shall be based on the number of fire hydrants that are installed.

B. Payment: Payment for Fire Hydrant Assembly shall be on the basis of the unit price

provided in the BID FORM and shall include the cost of excavation, bedding, backfill, restrained hydrant tee, restrained hydrant lead pipe, 3-way fire hydrant, fittings/couplings, restraint/blocking, and all labor, materials, tools, testing, and hauling/freight required for a complete and functional installation.

3.07 GATE VALVE

A. Measurement: Measurement for Gate Valve shall be based on the number of valves that are installed.

B. Payment: Payment for Gate Valve shall be on the basis of the unit price provided in the BID FORM for valves of various sizes and shall include the cost of the gate valve, box, stem, cover, and all labor, materials, tools, testing, freight/hauling, and equipment required to install the gate valves where shown in the plans.

3.08 WATER MAIN – OPEN CUT

A. Measurement: Measurement for Water Main – Open Cut shall be on a per linear foot basis.

B. Payment: Payment for Water Main – Open Cut shall be on the basis of the unit price provided in the BID FORM and shall include the cost of pipe of various materials and sizes, excavation, bedding, & backfill, all adaptors/transitions/couplings, thrust blocking, restrained joint glands/gaskets, fittings (bends, tees, crosses, reducers, etc.), **connecting to existing water lines (where applicable)**, pipe cutting, and all freight/hauling, labor, materials, tools, testing, and equipment required.

3.09 WATER MAIN – HORIZONTAL DIRECTIONAL DRILL

A. Measurement: Measurement for Water Main – Horizontal Directional Drill shall be on a per linear foot basis.

B. Payment: Payment for Water Main – Horizontal Directional Drill shall be on the basis of the unit price provided in the BID FORM and shall include the cost of various sizes and materials of pipe, excavation, bedding, & backfill, pipe cutting, fusing/welding, directional drill operation, drilling fluid, excavation of launching & receiving pits, and all freight/hauling, labor, materials, tools, testing, and equipment required.

3.10 WATER MAIN – OPEN CUT ROADS

A. Measurement: Measurement for Water Main – Open Cut Roads shall be on a per linear foot basis.

B. Payment: Payment for Water Main – Open Cut Roads shall be on the basis of the unit price provided in the BID FORM and shall include the cost of pipe of various

materials and sizes, excavation, bedding, & backfill, Class “A” concrete, asphalt surface course, all adaptors/transitions/couplings, thrust blocking, restrained joint glands/gaskets, fittings (bends, tees, crosses, reducers, etc.), connecting to existing water lines, pipe cutting, and all freight/hauling, labor, materials, tools, testing, and equipment required.

3.11 TAPPING SLEEVE & VALVE INSTALLATION

A. Measurement: Measurement for Tapping Sleeve & Valve Installation shall be based on the number of hot-tap connections made to existing water lines/mains.

B. Payment: Payment for Tapping Sleeve & Valve Installation shall be on the basis of the unit price provided in the BID FORM and shall include the cost of the tapping sleeve & valve assembly of various sizes, tapping/connecting to existing water mains, valve riser & box/cover, and all freight/hauling, labor, materials, tools, testing, and equipment required.

3.12 CUT, CAP, & ABANDON WATER LINES

A. Measurement: Measurement for Cut, Cap, & Abandon Water Lines shall be on a per each basis.

B. Payment: Payment for Cut, Cap, & Abandon Water Lines shall be on the basis of the unit price provided in the BID FORM and shall include the cost of all excavations, isolating lines, pipe cutting, installation of two (2) ductile iron caps, backfill, and all freight/hauling, labor, materials, tools, testing, and equipment required.

3.13 WATER SERVICE TRANSFER

A. Measurement: Measurement for Water Service Transfer shall be on a per each basis.

B. Payment: Payment for Water Service Transfer shall be on the basis of the unit price provided in the BID FORM and shall include the cost of disconnecting the existing pipe, tapping saddle, corporation stop, installing new piping/tubing to match existing size, directional drill operation (if required), couplings/adapters, and all labor, materials, tools, testing, freight/hauling, and equipment required to transfer existing water service lines to the new main.

3.14 TRAFFIC CONTROL

A. Measurement: Measurement for Traffic Control shall be on a lump sum basis for the entire project, including the wells site and along the proposed water main alignment shown in the BID FORM.

B. Payment: Payment for Traffic Control shall be at the lump sum price provided in the BID FORM and shall include all traffic control operations, labor, materials, signage, procedures, devices, and equipment required to adhere to the latest MUTCD, GDOT, and local standards and recommendations throughout construction.

3.15 EROSION CONTROL

A. Measurement: Measurement for Erosion Control shall be on a lump sum basis for the entire project, including at the wells site and along the proposed water main alignment.

B. Payment: Payment for Erosion Control shall be on the basis of the lump sum price provided in the BID FORM and shall include all NPDES permitting, NOI filing, inspection, sampling, record keeping, reporting, ES&PC signage, silt fence, check dams, temporary & permanent grassing, NOT filing, and all labor, materials, tools, testing, freight/hauling, and equipment required.

3.16 LANDSCAPING COMPLETE

A. Measurement: Measurement for Landscaping Complete shall be on a lump sum basis.

B. Payment: Payment for Landscaping Complete shall be on the basis of the lump sum price provided in the BID FORM and shall include the cost of providing and installing landscaping trees/shrubbery in accordance with the landscaping plan, as well as replacing/relocating any disturbed landscaping and landscaping features for the entire project site, including fencing, shrubbery, trees, planter beds, irrigation systems, specific grassing, planter beds, and all labor, materials, tools, testing, freight/hauling, and equipment required.

END OF SECTION

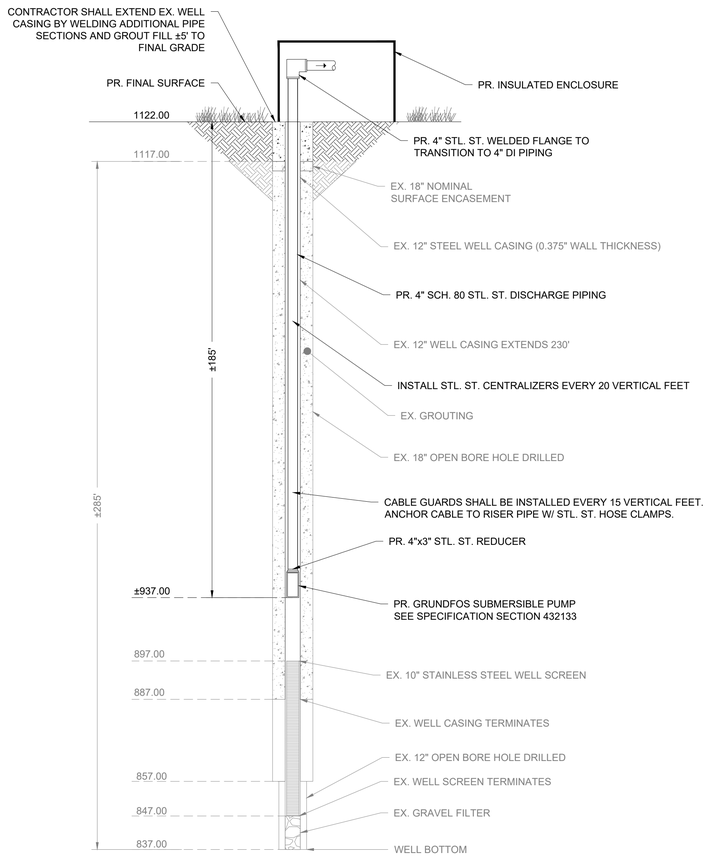

HENDERSON WELL SECTION
NOT TO SCALE

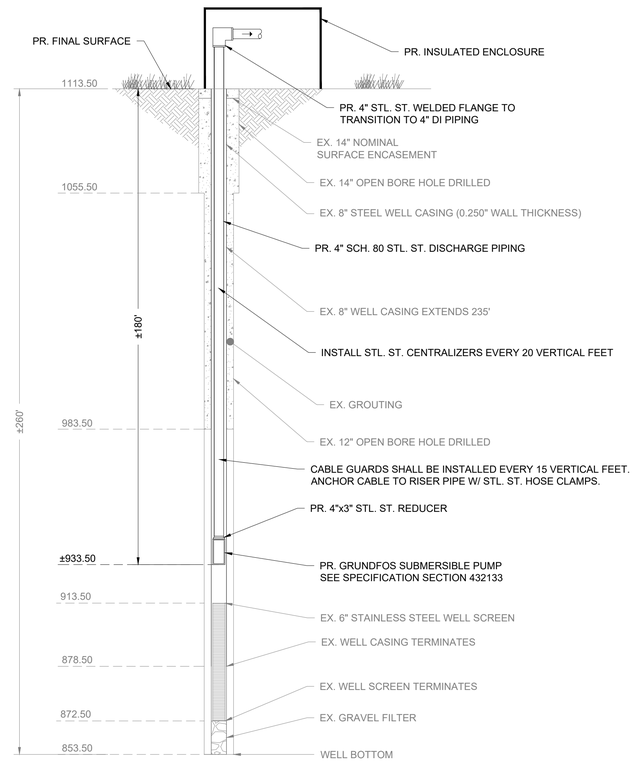

WATERSTONE WELL SECTION
NOT TO SCALE

NOTES:

1. PRECAST CONCRETE VAULT SHALL BE BY TINDALL OR APPROVED EQUIVALENT.
2. VAULT SHALL NOT BE LOCATED IN AREA SUBJECT TO GROUND WATER RUNOFF, STORM DRAIN COLLECTION AND DISCHARGE, OR AREAS PRONE TO CONSTANT WATER INFILTRATION. VAULT SHALL BE ABLE TO DRAIN BY GRAVITY OR BY ALTERNATE MEANS.
3. HATCH DOOR TO BE LOCATED OVER METER ASSEMBLY FOR EASE OF REMOVAL.
4. CONTRACTOR TO SEAL ALL OPENINGS IN VAULT WITH LS-200 LINK SEAL & NON-SHRINK GROUT.
5. FOR FINAL APPROVAL, ASSEMBLY MUST BE SET IN VAULT AS SPECIFIED. UNDER NO CONDITION WILL ANY CONNECTION BE ALLOWED BETWEEN THE SERVICE METER AND BACKFLOW PREVENTER USED FOR SYSTEM CONTAINMENT. BACKFLOW PREVENTER SHALL BE INSTALLED DOWNSTREAM OF ALL METERS.
6. ALL BACKFLOW PREVENTION DEVICES MUST BE SUCCESSFULLY TESTED PRIOR TO FINAL ACCEPTANCE BY THE ENGINEER.

MATERIALS		
ITEM	QTY	DESCRIPTION
1	1	6'x8' PRECAST CONCRETE VAULT
2	1	ALUMINUM HATCH W/ LOCKING HASP
3	1	WALL-MOUNTED STEEL LADDER
4	1	6" 709DCDA DOUBLE CHECK DETECTOR ASSEMBLY
5	1	#57 STONE BEDDING
6	3	STANDON S-89 FLANGED PIPE SUPPORT
7	2	6" FLxRJ DUCTILE IRON PIPE SPOOL PIECE
8	2	6" MECHANICAL JOINT W/ MEGALUG (OR EQUIVALENT)
9	2	LS-200 LINK SEAL
10	1	3" PVC DRAIN PIPING W/ FILTER FABRIC
11	1	1.5" DOMESTIC WATER LINE
12	1	CURB STOP / ISOLATION VALVE
13	1	WATER METER
14	1	BACKFLOW PREVENTER
15	1	METER BOX

BACKFLOW VAULT NOTES
NOT-TO-SCALE

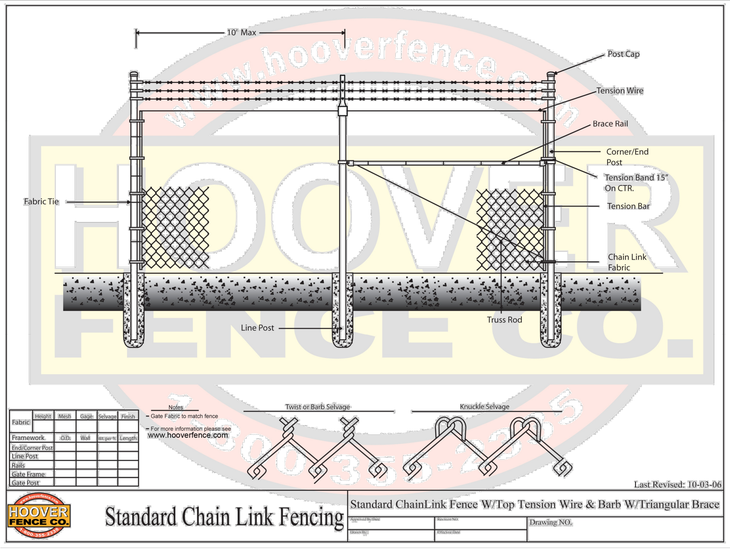

*OTHER EQUAL ALTERNATIVES MAY BE UTILIZED

CHAIN LINK FENCE
NOT TO SCALE

INSULATED FIBERGLASS ENCLOSURE SIZING GRID



MODEL #	OUTSIDE TOP A—B	LOWER COVER C—D	BOTTOM AT UPPER BASE E—F	OUSIDE BASE FLANGE G—H	COVER HEIGHT I	OVERALL HEIGHT J
D-103	20.75 x 6.00	27.25 x 12.25	30.25 x 14.75	33.75 x 18.25	21.5	23.25
D-104	31.75 x 5.75	38.25 x 12.25	41.25 x 15	44.25 x 18	20.75	23.5
D-102	22.25 x 15.75	26.5 x 20	29 x 22.25	33 x 26.25	25.75	28.5
D-102-39	22.25 x 15.75	25.75 x 19.25	31 x 25	34 x 27.75	25.75	39
D-105	41.25 x 17.50	47 x 22.75	49 x 25	53.5 x 29.5	23.5	25.5
D-105-36	41.25 x 17.50	47 x 22.75	52 x 28	55 x 31	23.5	36
D-100	30 x 20.75	41.5 x 32.5	44 x 35	48.5 x 39.75	34.75	37
D-106	39 x 31.25	49 x 40.5	50.75 x 42.5	54.75 x 46.5	40	43.5
D-207	48.75 x 32	55.5 x 37.5	59.5 x 40.5	65 x 46	35.5	37.25
D-207-48	48.75 x 32	55.5 x 37.5	63 x 44	65.5 x 47	35.5	48
D-108	64.5 x 31.5	68.5 x 34.5	70.5 x 36.5	74.5 x 40.5	44.25	46.25
D-301	74.63 x 46.5	82.5 x 54.5	86.5 x 59	90.5 x 63	26.75	33.75
D-303	74.63 x 46.5	82.5 x 54.5	86.5 x 59	90.5 x 63	46	53

GENERAL SPECIFICATIONS

The molded fiberglass enclosure shall be constructed with rigid thixotropic polyester resin and 30% chopped glass in 1-1/2 to 2-inch random patterns of 1/8 to 3/16 inch thick. The exterior finish shall be White isophthalic gel-coating .02 to .04 inches. The inside surface shall be insulated with 2 lb.-density sprayed-on polyurethane foam, producing an R-14 to R-19 composite value. The fiberglass base flange shall be hinged using 3-1/2-inch noncorrosive polycross link hinges or 3 x 4-inch stainless steel. A 30 lb. spring-loaded latch hooks to a 7-inch cast aluminum handle.

WELL HOUSE FIBERGLASS ENCLOSURE DETAIL
NOT-TO-SCALE

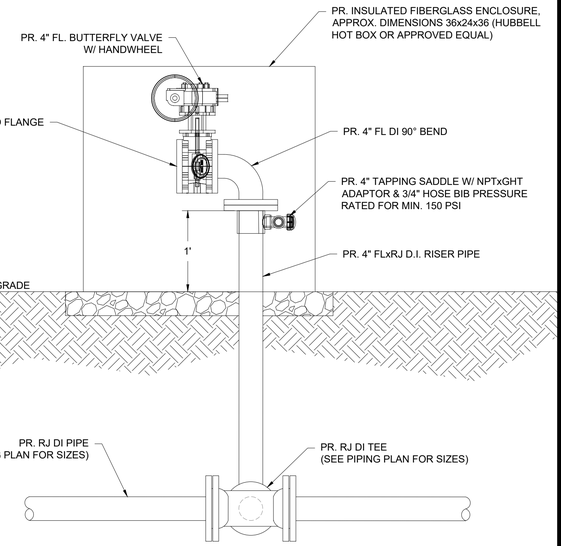

WELL BLOW-OFF VALVE DETAIL
NOT-TO-SCALE

ESG ENGINEERING
6400 Peake Rd
Macon, GA 31210
Ph: (478) 474-4996
Fax: (478) 474-5045

GROUNDWATER WELLS #4 & #5

FOR THE

CITY OF FLOWERY BRANCH

REVISIONS

NO.	DESCRIPTION	DATE
1	ESPC SHEETS	11-7-25
2	BID SET OF PLANS	12-1-25
3	REVISED WITH CITY COMMENTS	12-5-25
4	ADDENDUM #1	12-8-25
5	ADDENDUM #2	12-11-25
6	ADDENDUM #3	12-12-25

BID SET

GEORGIA REGISTERED No. PE046341 PROFESSIONAL ENGINEER ANDREW D SWICEGOOD

DRAWN BY: DSC
CHECKED BY: ADS
DATE: OCT 2025
SCALE: N.T.S.

CONTENT:

CONSTRUCTION DETAILS

SHEET NO: 36

C9.3

PLUMBING SPECIFICATIONS

Provide all plumbing items indicated on the drawings, described herein or otherwise required for a complete and proper installation, including:
A. Plumbing fixtures, fittings and equipment.
B. Hot and cold water systems.
C. Drain waste and vent piping systems.
D. Indirect waste piping, including all valves, traps, piping and accessories for all equipment. Size per equipment requirements.

Comply with all applicable codes, standards and ordinances, including requirements of the Georgia State Minimum Standard Plumbing Code (2018 International Plumbing Code with all Georgia State Amendments), Georgia State Minimum Standard Gas Code (2018 International Gas Code with all Georgia State Amendments), Georgia State Minimum Standard Energy Code (2015 International Energy Conservation Code with all Georgia State supplements and Amendments), and the DOJ 2010 ADA Standards for Accessible Design with Georgia Amendments of Rule 120-3-20.

The contractor should not attempt to precisely scale dimensions from these drawings to obtain construction dimensions and clearance. The contractor shall verify all actual dimensions and clearances. Although these plans are diagrammatic in nature, they shall be followed as closely as site conditions, new construction, and work by other trades shall permit. Deviations from these drawings, which are required to conform to the available space or to actual building construction, shall be made at no additional cost to the owner.

The submission of a bid or proposal will be construed as evidence that the contractor has familiarized himself with the plans and building site. Claims made subsequent to the proposal for materials and/or labor due to difficulties encountered will not be recognized unless these difficulties could not have been foreseen, even though proper examination had been made.

Fabrication or ordering of any material or equipment prior to verification of site conditions shall be done at the contractor's risk.

All equipment and material shall be new and of first quality. Equipment and material shall be the same or equal to the basis of design listed on these drawings.

Coordinate with all trades and verify all equipment rough-in items and locations with the equipment supplier or contractor. All re-work and corrections required due to lack of coordination shall be the contractor's responsibility, and done at no cost to the owner.

Submit shop drawings and material data submittals to the engineer for approval before installation. No substitutions shall be allowed without prior approval by the engineer. Product data for piping, insulation, valves, specialties and all fixtures and equipment scheduled and specified here. For each submittal for review, allow 15 days excluding delivery time to and from the Contractor.

All equipment and flue materials shall be U.L. listed.

Installation shall comply with manufacturer requirements including all clearances recommended for proper operation of service. All serviceable parts shall be readily accessible.

Sanitary drain, roof drainage and vent piping shall be ASTM D2665 schedule 40 PVC with PVC Socket Fittings (ASTM D 2665, made to ASTM D 3311, drain, waste, and vent patterns and to fit Schedule 40 pipe). Slope pipe sizes 6" and under at 1/8 inch per foot continuously toward public sewer. Slope pipe sizes 8" and larger at 1/16 inch per foot continuously toward public sewer. All aboveground piping shall be adequately supported. Install underground, PVC plastic drainage piping according to ASTM D2321. Install aboveground PVC piping according to ASTM D 2665. Cellular Core PVC (Foam Core PVC) not acceptable. Provide PVC IPEX type 1 expansion joints on alternating floors on horizontal sewer, storm, and vent risers over 30 feet tall.

Insulate aboveground floor drains, traps, and sanitary drain piping within 10 feet of drain receiving condensate and equipment drain water below 60° with 1" thick type i performed glass-fiber pipe insulation, 1-1/2" cellular glass, or 1" flexible elestomeric.

All above ground domestic water distribution piping shall be ASTM D 2846, SDR11, schedule 40 CPVC with socket fittings. All piping shall be adequately supported. Disinfect all domestic water piping after installation. All underground domestic water distribution piping 1" and smaller shall be ASTM D 876 & ASTM F 877 PEX with no fittings underground. All underground domestic water distribution piping 1-1/4" and larger shall be ASTM D 1785 schedule 40 PVC with ASTM D 2466 PVC socket fittings. Wrap piping larger than 2" in return air plenums with fire barrier plenum rated wrap.

Chemical waste piping shall be Charlotte pipe Chemdrain CPVC chemical waste schedule 40 drainage dipe and fittings.

DOMESTIC WATER PIPING CLEANING

A. Clean and disinfect potable domestic water piping as follows:
   1. Purge new piping and parts of existing piping that have been altered, extended, or repaired before using.
   2. Use purging and disinfecting procedures prescribed by authorities having jurisdiction; if methods are not prescribed, use procedures described in either AWWA C651 or AWWA C652 or follow procedures described below:
      a. Flush piping system with clean, potable water until dirty water does not appear at outlets.
      b. Fill and isolate system according to either of the following:
         1) Fill system or part thereof with water/chlorine solution with at least 50 ppm (50 mg/L) of chlorine. Isolate with valves and allow to stand for 24 hours.
         2) Fill system or part thereof with water/chlorine solution with at least 200 ppm (200 mg/L) of chlorine. Isolate and allow to stand for three hours.
      c. Flush system with clean, potable water until no chlorine is in water coming from system after the standing time.
      d. Repeat procedures if biological examination shows contamination.
      e. Submit water samples in sterile bottles to authorities having jurisdiction.
B. Prepare and submit reports of purging and disinfecting activities. Include copies of water-sample approvals from authorities having jurisdiction.
C. Clean interior of domestic water piping system. Remove dirt and debris as work progresses.

Domestic water piping shall be insulated with Owens Corning type ASJ/SSL-II heavy density fiber glass with all service jacket. Insulation shall have a flame spread rating not to exceed 25 and a smoke density not to exceed 50 when tested in accordance with U.B.C. standard 42-1. Provide mastic on all joints and exposed ends of insulation. Insulate domestic Cold water piping in unconditioned spaces such as exterior corridors, attic, basements, etc with 1/2" thick insulation for piping 1-1/4" & smaller and 1" thick insulation for piping 1-1/2" & larger. Insulate all domestic Hot water supply and return piping with 1" thick insulation for piping 1-1/4" & smaller and 1-1/2" thick insulation for piping 1-1/2" & larger.

HW & CW Valves: Use pipe size valves, as shown below:
A. Ball: Spears CPVC True Union.
B. Check: Spears CPVC True Union.

Lavatory/ Sink supply fittings: NSF Standard: Comply with NSF/ANSI 61 Annex G, "Drinking Water System Components – Health Effects," for supply-fitting materials that will be in contact with potable water. Standard: ASME A112.18.1/CSA B125.1. Supply Stops: Chrome-plated-brass, one-quarter-turn, ball-type valve with inlet connection matching supply piping. Wheel handle operation. Risers: Chrome-plated, soft-copper flexible tube for exposed applications and ASME A112.18.6, braided- or corrugated-stainless-steel, flexible hose for conceal behind cabinet applications.

Provide ADA Supply and Drain Protective Shielding Guards on ADA fixtures that piping is exposed. Supply and Drain Protective Shielding Guards shall comply with ICC A117.1 and Americans with Disabilities Act (ADA) requirements. Manufactured plastic wraps shall cover hot and cold water supplies, trap, and drain piping.

All pipe hangers, clamps and channels shall be adequately sized to carry pipe loads and prevent sagging.

All other materials not specifically described but required for a complete and proper installation of work of this section, shall be new, first quality of their respective kinds, and as selected by the contractor subject to acceptance by the engineer.

Lay out the plumbing system in careful coordination with the drawings, determining proper elevations for all components of the system and using only the minimum number of bends to produce a satisfactorily functioning system. Follow the general layout shown on the drawings in all cases except where other work may interfere. Unless shown otherwise, lay out all pipes to fall within partition, wall floor, or roof cavities, and to not require furring other than as shown on the drawings.

Do not cut into or reduce the size of any load-carrying member without the prior approval of the architect. Install all pipes to clear all beams and obstructions.

Extend all plumbing vents above roof to parapet height.

Permanently close and make weatherproof any openings or penetrations of the building envelope made for plumbing systems. All wall and floor penetrations shall be sleeved. All exterior wall or foundation wall penetrations shall use a mechanical seal.

Coordinate all roof penetrations with architectural plans and building and roofing trades.

Provide shut-off balls valves and unions at all water connections to equipment and appliances.

Isolate all dissimilar metals with "EPCO" dielectric unions, except for brass or bronze valves with steel pipe.

Protect the potable water supply against backflow and siphonage from equipment, fixtures, etc., using approved backflow and anti-siphon devices.

Thoroughly clean all piping and equipment. Removing all dirt, rust, oil, and plaster.

Test Sanitary and storm drainage piping by plugging all openings and filling with water to a height equal to a 10 foot head. Allow to stand one hour or longer as required. Repair leaking joints and then re-test.

No work shall be covered until it has been inspected and accepted by the local authority.

Domestic water piping tests: Fill domestic water piping. Check components to determine that they are not air bound and that piping is full of water. Test for leaks and defects in new piping and parts of existing piping that have been altered, extended, or repaired. Leave new, altered, extended, or replaced domestic water piping uncovered and unconcealed until it has been tested and approved. Expose work that was covered or concealed before it was tested. Cap and subject piping to static water pressure of 50 psig (345 kPa) above operating pressure, without exceeding pressure rating of piping system materials. Isolate test source and allow it to stand for four hours. Leaks and loss in test pressure constitute defects that must be repaired. Repair leaks and defects with new materials, and retest piping or portion thereof until satisfactory results are obtained.

The entire system shall be warranted for a period of one (1) year beginning with Owner's acceptance of the work. All labor and materials necessary to repair or replace the system, or portions thereof, during that time shall be warranted for a period of one (1) year from the repair or replacement.

Install piping in concealed locations, unless otherwise indicated and except in equipment rooms, and service areas. Install piping indicated to be exposed and piping in equipment rooms and service areas at right angles or parallel to building walls. Diagonal runs are prohibited unless specifically indicated otherwise. Install piping above accessible ceilings to allow sufficient space for ceiling panel removal. Install piping to permit valve servicing. Install piping at indicated slopes. Install piping free of sags and bends. Install fittings for changes in direction and branch connections. Install piping to allow application of insulation. Select system components with pressure rating equal to or greater than system operating pressure. Install escutcheons for penetrations of walls, ceilings, and floors. Verify final equipment locations for roughing-in.

Confirm that millwork is constructed with adequate provision for the installation of counter top lavatories and sinks.

Seal fixtures to wall and floor surfaces with sealant, color to match fixture.

All vents thru roof (VTR) shall be offset a minimum of 10'-0" from all outside air intakes.

Provide Plastic Pipe Markers on all aboveground plumbing piping that Comply with ASME A13.1. Minimum information indicating flow direction arrow and identification of fluid being conveyed. Install labeling on pipe at intervals of not more than 20 feet and at least once in each room.

Provide a complete through penetration fire stopping assembly for fire resistance rated wall assemblies. The through penetration assembly must be listed by an approved third-party test agency (UL), and include the entire listed assembly with all notations. Refer to architectural drawings for fire wall locations.

Approved manufactures: (Items submitted shall be approved by architect and engineer. Architect and engineer reserve the right to reject any item substituted for basis of design item for any reason.)

Supplies & Traps: Engineered Brass CO., Mcguire, Charlotte Pipe, Brasscraft, IPS, Watts, Zurn
Floor Drains & Cleanouts: Zurn, Jay R Smith, Proset, Watts, Mifab, Wade, Josam, Sioux Chief, Oatey
Tankless Electric Water Heaters: A.O. Smith, Rheem, EEmax, Chronomite
Wall Hydrants/ Hose Bibbs: MIFAB, Jay R. Smith, Wade, Watts, Woodford, Zurn
CPVC Valves: American, NIBCO, Spears
Mop Sinks: Stern Williams, Acorn, Fiat
Wash Fountains: Acorn, Willoughby, Bradley
Eyewash: Stingray, Guardian, Acorn, Bradley, Haws, Speakman

FIXTURE AND EQUIPMENT SCHEDULE

#	FIXTURE TYPE	WASTE		WATER SUPPLY		WATER FIX. CONN.		MODEL NUMBER
		BELOW FLOOR	FIXTURE CONN.	COLD	HOT	COLD	HOT	
ESS	COMBINATION DRENCH SHOWER AND EYE/FACE WASH				1-1/4"		1-1/4"	ULINE H-10735
NFWH1	BACKFLOW PROTECTED AUTOMATIC DRAINING FREEZELESS HOSE BIBB			3/4"		3/4"		PRIER C-634
NFWH2	BACKFLOW PROTECTED AUTOMATIC DRAINING FREEZELESS HOSE BIBB				3/4"		3/4"	PRIER C-634
RPZ	REDUCED PRESSURE ZONE ASSEMBLIES			SEE DWGS.		SEE DWGS.		WATTS LF009.
FD	FLOOR DRAIN WITH WATERLESS TRAP PRIMER	SEE DWGS	SEE DWGS					ZURN Z730
GCO	GRADE CLEANOUT	SEE DWGS	SEE DWGS					WATTS CO-200-RX-4-60.
MOP	MOLDED HIGH-DENSITY COMPOSITE BASIN							PFMB2424

CONTRACTOR SHALL COORDINATE WITH CIVIL SHEET C9.2 & C9.1 AND ARCHITECT BEFORE ORDERING FIXTURES

WATER HEATER SCHEDULE

MARK	MANUFACTURER	MODEL NUMBER	TYPE	TURN ON (GPM)	KW	PHASE	VOLTAGE
WH	EEMAX	PRO SERIES XTP054480	TANKLESS ELECTRIC	0.5	54.0	3	480

NOTE: PROVIDE CORROSION RESISTANCE N4X6 CABINET

LEGEND

—⋈—	BALL VALVE	— — —	COLD WATER
—⋈—	CHECK VALVE	— - — - —	HOT WATER
—○—	PIPE UP	———	SEWER
—⊖—	PIPE DOWN	CW	COLD WATER
F.F.E.	FINISHED FLOOR ELEVATION	HW	HOT WATER
(TYP)	TYPICAL	—▽—	STRAINER
N.T.S.	NOT TO SCALE	PDI-Ⓗ	PDI UNIT WATER HAMMER ARRESTOR

TOTAL ENGINEERS
169 New Street, Macon, GA 31201
(478)741-4632 - T.E. project # 25-101
www.totalengineers.com
GA COA NO # PEF009195 EXP: 06/30/2026

ESG ENGINEERING

GROUNDWATER WELLS #4 & #5

FOR THE
CITY OF FLOWERY BRANCH

REVISIONS

NO.	DESCRIPTION	DATE
2	ADDENDUM 2	

GEORGIA REGISTERED PROFESSIONAL ENGINEER KRUNAL M PATEL

DRAWN BY: KMP
CHECKED BY: KMP
DATE:
SCALE:

CONTENT:

PLUMBING SCHEDULES & SPECIFICATIONS

SHEET NO:

P0.1

Last Saved By: Owner
Plotted: 12/12/2025 10:41 AM
Drawing Path: Z:\2025\101 Well Project Chem Feed Building\Flowery Branch, GA\DRAWINGS\TE\25-101 PLUMBING.dwg

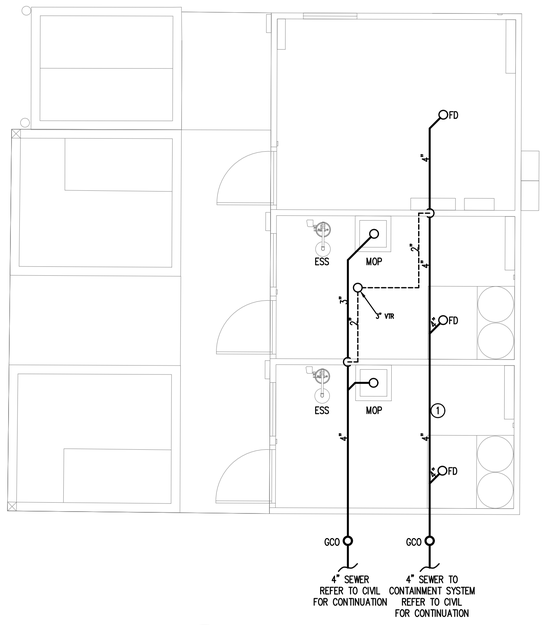

1 PLUMBING PLAN - SEWER
SCALE: 1/4"=1'-0"

KEY NOTES(THIS SHEET ONLY):

1. CONTRACTOR SHALL AVOID ALL HELICAL PILES AND FOOTERS FOR UNDERGROUND PLUMBING. TYPICAL FOR ALL UNDERGROUND PLUMBING.
2. DOMESTIC WATER LINES SHALL BE AFFIXED TO WALL OR HUNG FROM CEILING. TYPICAL FOR ALL PLUMBING PIPES.

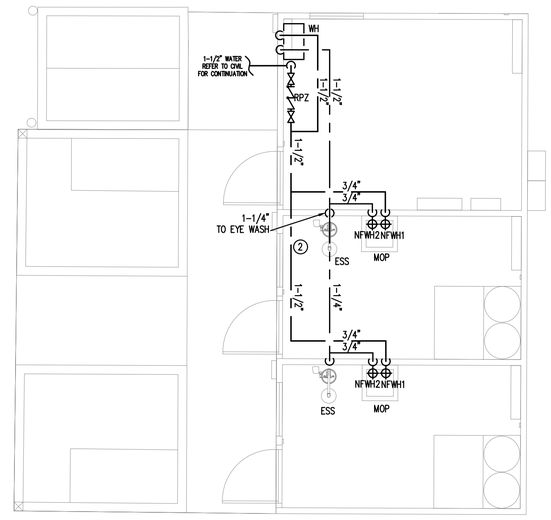

2 PLUMBING PLAN - WATER
SCALE: 1/4"=1'-0"

ESG ENGINEERING

GROUNDWATER WELLS #4 & #5

FOR THE

CITY OF FLOWERY BRANCH

REVISIONS

NO.	DESCRIPTION	DATE
2	ADDENDUM 2	

GEORGIA REGISTERED PROFESSIONAL ENGINEER KRUNAL M PATEL

DRAWN BY: KMP
CHECKED BY: KMP
DATE:
SCALE:

CONTENT:

PLUMBING PLANS

SHEET NO:

P1.0

TOTAL ENGINEERS
169 New Street, Macon, GA 31201
(478)741-4632 - T.E. project # 25-101
www.totalengineers.com
GA COA NO # PEF009195 EXP: 06/30/2026

Last Saved By: Owner
Plotted: 12/12/2025 10:41 AM
Drawing Path: Z:\2025\101 Well Project Chem Feed Building Flowery Branch, GA\DRAWINGS\TE\25-101 PLUMBING.dwg

SECTION 01025
MEASUREMENT AND PAYMENT

PART 1 – GENERAL

1.01 SCOPE OF WORK

A. This Section describes the methods by which measurement will be made of the quantities for which payment will be made for the Project.

B. The Bid lists each item of the Project for which payment will be made. No payment will be made for any items other than those listed in the Bid.

C. Required items of work and incidentals necessary for the satisfactory completion of the work which are not specifically listed in the Bid, and which are not specified in this Section to be measured or to be included in one of the items listed in the Bid, shall be considered as incidental to the work and whose cost shall be included in the item of the Bidder's choice. All costs thereof, including Contractor's overhead costs and profit, shall be considered as included in the lump sum or unit prices bid for the various Bid items. The Contractor shall prepare the Bid accordingly.

D. Work includes furnishing all labor, equipment, tools and materials, which are not furnished by the Owner and performing all operations required to complete the work satisfactorily, in place, as specified and as indicated on the Drawings.

1.02 MEASUREMENT OF WORK

A. Measurement methods delineated in the individual specification sections complement the criteria of this section. In the event of conflict, the requirements of the individual specification section govern.

B. Work shall be measured by the Engineer or his representative with assistance from the Contractor prior to preparation of a payment request by the Contractor.

C. Unit quantities that are measured in place shall be measured as they are placed. The Contractor shall give the Engineer a minimum of two days' notice for making all required measurements.

D. Materials that must be measured as delivered shall be measured at the time of delivery by the Engineer or his representative; the Contractor shall provide sufficient advance notice so that such measurements can be made.

E. Work necessary for a complete and operational job, such as relocation of mailboxes

or fences, removal of trees, relocation of utilities, graveling / maintaining driveways and driving lanes, field engineering, clearing and grubbing, traffic control, etc., not specifically identified as a pay item shall be included in the unit price bid of the Bidder's choosing. No additional payments will be made for such activities.

1.03 ESTIMATED QUANTITIES

All estimated quantities for unit price items, stipulated in the BID FORM, or other Contract Documents, are approximate and are to be used as a basis for comparing the bids submitted for the Project. The actual amounts of work done and materials furnished under unit price items may differ from the estimated quantities. The basis of payment for work and materials will be the actual amount of work done and materials furnished. The Contractor agrees to make no claim for damages, anticipated profits or otherwise on account of any difference between the amounts of work actually furnished and the estimated amounts included in the BID FORM. The Contractor will not be paid for any work which exceeds the quantity set forth in the BID FORM without a change order issued before the work is performed unless specifically ordered in writing by the Engineer. The Contractor will provide assistance to the Engineer to check quantities and elevations when so requested.

1.04 MEASUREMENT OF QUANTITIES

A. Measurement by Weight – Concrete reinforcing steel, rolled or formed steel or other metal shapes will be measured by handbook weights. Welded assemblies will be measured by handbook or scale weight.

B. Measurement by Volume – Measured by cubic dimension using mean length, width and height or thickness.

C. Measurement by Area – Measured by square dimension using mean length and width or radius.

D. Linear Measurement – Measured by linear dimension, at the item centerline or mean chord.

E. Stipulated Sum/Price Measurement – Items measured by weight, volume, area, or linear means or combination, as appropriate, as a completed item or unit of the Work.

1.05 PROGRESS PAYMENTS

A. Progress payments shall be based on percentage of work complete for lump sum pay items and units installed for unit price pay items.

B. All items of Work not specifically listed in the Bid Schedule shall be considered incidental to the construction, and the cost of all such work and material shall be

included in the item of the Contractors choice.

C. All items listed for measurement and payment shall include all materials, labor, and equipment necessary to successfully and satisfactorily complete Work specified.

D. Payment – The Contractor will receive payment only for the items listed in the Bid Schedule of his contract, and no separate payments will be made for the work under any section of the Contract Documents except as provided for in the Bid Form. Where measurements are required to be made by the Engineer, for the payment of a pay item, the failure of the Contractor to give the adequate notification or failure of the Contractor to give the engineer assistance for the measurement shall result in the forfeiture of payment for the work or item which was not measured.

PART 2 – PRODUCTS

2.01 STORED MATERIALS

A. Partial payment shall be made for approved materials stored at the project site, provided invoices for said materials are furnished in accordance with payment request submittal and shop drawings for said materials have been approved.

PART 3 – EXECUTION

3.01 CLEARING & GRUBBING

A. Measurement: Measurement for Clearing & Grubbing shall be on a lump sum basis and shall include all clearing & grubbing required for the project site, including the wells site & along the proposed water main alignment.

B. Payment: Payment for Clearing & Grubbing shall be on the basis of the lump sum price provided in the BID FORM and includes clearing and grubbing for all areas shown in the plans where the proposed work conflicts with existing vegetation/trees, and includes all trimming, tree removal, clearing, grubbing, root raking, hauling, disposal, and all labor, materials, tools, and equipment required.

3.02 DEMOLITION

A. Measurement: Measurement for Demolition shall be on a lump sum basis.

B. Payment: Payment for Demolition shall be on the basis of the lump sum price provided in the BID FORM and includes the demolition/removal of all existing site features in conflict with the proposed improvements as shown on the Plans, and includes hauling, disposal, and all labor, materials, tools, and equipment required.

3.03 GROUNDWATER WELLS #4 & #5 IMPROVEMENTS COMPLETE

A. Measurement: Measurement for Groundwater Wells #4 & #5 Improvements

Complete shall be on a lump sum basis.

B. Payment: Payment for Groundwater Wells #4 & #5 Improvements Complete shall be on the basis of the lump sum price provided in the BID FORM. Payment shall include all ancillary labor, materials, tools, testing, hauling/transportation, mobilization, and equipment required for a complete and functional project, including but limited to:

- Site grading, including all import fill material and removal, hauling, and disposal of excess materials
- Landscaping
- Gravel access drive & well site pad (incl. Tensar geogrid & GAB)
- Concrete sidewalk/walking areas and external chemical storage areas
- Protective bollards
- Yard hydrant installation (incl. all valves, fittings, etc.)
- Asphalt parking area (incl. Tensar geogrid & GAB)
- Chain link security fencing & gates
- Two (2) Groundwater Wells construction
    - Grundfos submersible pumps
    - Cables, supports, brackets, centralizers, hardware, etc.
    - Electrical & controls improvements
    - Discharge piping, fittings, transitions/connections, valves, & well casing pipe
    - Pressure gauges
    - Well pump enclosures
    - Support slabs (incl. reinforcement, concrete, Tensar geogrid, & crushed stone)
    - All other ancillary and miscellaneous work required to install the groundwater wells in accordance with the Construction Plans and Spec. Sections 432133 & 02514
- Ancillary Items for Chemical Feed Building
    - Building foundation
        - Foundation installation per Structural plan
        - Pile design & stamped drawing per helical pile engineer
        - Helical pile installation
    - Interior wall and floor coating system per construction drawings
    - All Mechanical/HVAC improvements shown on the mechanical plan
    - All Electrical improvements (incl. wiring, conduits, equipment, etc.)
    - All interior/exterior lighting improvements
    - Domestic water service tap w/ meter, backflow preventer, & box
    - All plumbing fixtures/appurtenances/piping/fittings as shown in the plumbing plans

    - Discharge piping pressure gauge
    - Chemical feed system for fluoride & chlorine
        - Eight (8) Grundfos chemical feed pumps per Spec. Section 70001
        - Feed line tubing/piping, valves, fittings, saddle taps, injection quills, hardware, etc. per Section 70001
        - Raceway/chase box installation
    - Building sewer lines, cleanouts, and connection to existing san. sewer main
    - Chemical containment pallets & ramps
    - Ultrasonic flow meters
    - Flanged DI piping, fittings, & valves
    - Pipe supports
    - All pipe/conduit cores/penetrations (incl. coring, link seals, & grouting)
    - Gutters & downspouts
    - All other ancillary and miscellaneous work required to install the chemical feed building in accordance with Spec. Section 02513 & the applicable drawings
- Covered steel structure
    - Stamped engineering design plans and applicable fees
    - Foundation/footers per detail & note on Sheet C9.4
    - Steel structure/shelter installed per detail drawings
    - Gutters & downspouts
    - All other ancillary and miscellaneous work required to install the steel structure in accordance with Section 90001 and the applicable drawings (provided by Renegade)
- Isolated chemical spill containment system (incl. floor drains, piping, fittings, precast structures, and coatings/linings)
- All restrained joint & flanged ductile iron yard piping, fittings, & valves located up to and including the 8”x6” reducer located outside of the backflow vault (see Sheets C4.0 & C4.1)
- Riser blowoff/sampling piping
    - Tapping saddle, spigot, fittings/adaptors, etc.
    - Insulated enclosure
    - Crusher run bedding
- Exterior pipe insulation system
- All pipe coating/lining and painting
- Backflow installation
    - Double Check Detector Assembly (DCDA)
    - Pressure gauge
    - Pipe supports & blocking
    - Precast concrete vault

    - Access hatch
    - Ladder
    - Stone bedding & Tensar geogrid
    - Pipe, fittings, and valves (incl. coring, link seals, & grouting)
    - Drainage piping
- All electrical & controls materials, workmanship, equipment, coordination, implementation, testing, and ancillary items not furnished & installed by the utility provider (GA Power)
- All other ancillary and miscellaneous items required to provide a complete and functional project as shown and described in the Construction Plans, Details, and Specifications.

3.04 PRE-FABRICATED CONCRETE BUILDING

A. Measurement: Measurement for Pre-fabricated Concrete Building shall be on a lump sum basis.

B. Payment: Payment for Pre-fabricated Concrete Building shall be on the basis of the lump sum price provided in the BID FORM and shall include the cost of providing and installing the manufactured concrete structure, including but not limited to factory provided cores, doors, windows, walls, roof, exterior painting/coating application, building/roof sealing and connections, and all labor, materials, tools, fees/taxes, coordination, and hauling/freight/shipping required.

3.05 SCADA & CONTROLS INTEGRATION WORK COMPLETE

A. Measurement: Measurement for SCADA & Controls Integration Work Complete shall be on a lump sum basis.

B. Payment: Payment for SCADA & Controls Integration Work Complete shall be on the basis of the lump sum price provided in the BID FORM and shall include the cost of all equipment, materials, and work shown and described in the SCADA/CSI Scope of Work, and all required off-site controls work integration/connections to the existing system(s), and all labor, materials, tools, testing, and hauling/freight required for a complete and functional SCADA system installation.

3.06 DIESEL GENERATOR INSTALLATION

A. Measurement: Measurement for Diesel Generator Installation shall be on a lump sum basis.

B. Payment: Payment for Diesel Generator Installation shall be on the basis of the lump sum price provided in the BID FORM and shall include the cost of the generator, concrete support slab, steel reinforcement, Tensar geogrid, crushed

stone, grading of local area, all required electrical work/connections, transfer switch integration and all labor, materials, tools, testing, and hauling/freight required for a complete and functional installation.

3.07 FIRE HYDRANT ASSEMBLY

A. Measurement: Measurement for Fire Hydrant Assembly shall be based on the number of fire hydrants that are installed.

B. Payment: Payment for Fire Hydrant Assembly shall be on the basis of the unit price provided in the BID FORM and shall include the cost of excavation, bedding, backfill, restrained hydrant tee, restrained hydrant lead pipe, 3-way fire hydrant, fittings/couplings, restraint/blocking, and all labor, materials, tools, testing, and hauling/freight required for a complete and functional installation.

3.08 GATE VALVE

A. Measurement: Measurement for Gate Valve shall be based on the number of valves that are installed.

B. Payment: Payment for Gate Valve shall be on the basis of the unit price provided in the BID FORM for valves of various sizes and shall include the cost of the gate valve, box, stem, cover, and all labor, materials, tools, testing, freight/hauling, and equipment required to install the gate valves where shown in the plans.

3.09 WATER MAIN – OPEN CUT

A. Measurement: Measurement for Water Main – Open Cut shall be on a per linear foot basis.

B. Payment: Payment for Water Main – Open Cut shall be on the basis of the unit price provided in the BID FORM and shall include the cost of pipe of various materials and sizes, excavation, bedding, & backfill, all adaptors/transitions/couplings, thrust blocking, restrained joint glands/gaskets, fittings (bends, tees, crosses, reducers, etc.), **connecting to existing water lines (where applicable)**, pipe cutting, and all freight/hauling, labor, materials, tools, testing, and equipment required.

3.10 WATER MAIN – HORIZONTAL DIRECTIONAL DRILL

A. Measurement: Measurement for Water Main – Horizontal Directional Drill shall be on a per linear foot basis.

B. Payment: Payment for Water Main – Horizontal Directional Drill shall be on the basis of the unit price provided in the BID FORM and shall include the cost of various sizes and materials of pipe, excavation, bedding, & backfill, pipe cutting,

fusing/welding, directional drill operation, drilling fluid, excavation of launching & receiving pits, and all freight/hauling, labor, materials, tools, testing, and equipment required.

3.11 WATER MAIN – OPEN CUT ROADS

A. Measurement: Measurement for Water Main – Open Cut Roads shall be on a per linear foot basis.

B. Payment: Payment for Water Main – Open Cut Roads shall be on the basis of the unit price provided in the BID FORM and shall include the cost of pipe of various materials and sizes, excavation, bedding, & backfill, Class "A" concrete, asphalt surface course, all adaptors/transitions/couplings, thrust blocking, restrained joint glands/gaskets, fittings (bends, tees, crosses, reducers, etc.), connecting to existing water lines, pipe cutting, and all freight/hauling, labor, materials, tools, testing, and equipment required.

3.12 TAPPING SLEEVE & VALVE INSTALLATION

A. Measurement: Measurement for Tapping Sleeve & Valve Installation shall be based on the number of hot-tap connections made to existing water lines/mains.

B. Payment: Payment for Tapping Sleeve & Valve Installation shall be on the basis of the unit price provided in the BID FORM and shall include the cost of the tapping sleeve & valve assembly of various sizes, tapping/connecting to existing water mains, valve riser & box/cover, and all freight/hauling, labor, materials, tools, testing, and equipment required.

3.13 CUT, CAP, & ABANDON WATER LINES

A. Measurement: Measurement for Cut, Cap, & Abandon Water Lines shall be on a per each basis.

B. Payment: Payment for Cut, Cap, & Abandon Water Lines shall be on the basis of the unit price provided in the BID FORM and shall include the cost of all excavations, isolating lines, pipe cutting, installation of two (2) ductile iron caps, backfill, and all freight/hauling, labor, materials, tools, testing, and equipment required.

3.14 WATER SERVICE TRANSFER

A. Measurement: Measurement for Water Service Transfer shall be on a per each basis.

B. Payment: Payment for Water Service Transfer shall be on the basis of the unit price provided in the BID FORM and shall include the cost of disconnecting the existing pipe, tapping saddle, corporation stop, installing new piping/tubing to match existing size, directional drill operation (if required), couplings/adapters,

and all labor, materials, tools, testing, freight/hauling, and equipment required to transfer existing water service lines to the new main.

3.15 TRAFFIC CONTROL

A. Measurement: Measurement for Traffic Control shall be on a lump sum basis for the entire project, including the wells site and along the proposed water main alignment shown in the BID FORM.

B. Payment: Payment for Traffic Control shall be at the lump sum price provided in the BID FORM and shall include all traffic control operations, labor, materials, signage, procedures, devices, and equipment required to adhere to the latest MUTCD, GDOT, and local standards and recommendations throughout construction.

3.16 EROSION CONTROL

A. Measurement: Measurement for Erosion Control shall be on a lump sum basis for the entire project, including at the wells site and along the proposed water main alignment.

B. Payment: Payment for Erosion Control shall be on the basis of the lump sum price provided in the BID FORM and shall include all NPDES permitting, NOI filing, inspection, sampling, record keeping, reporting, ES&PC signage, silt fence, check dams, temporary & permanent grassing, NOT filing, and all labor, materials, tools, testing, freight/hauling, and equipment required.

3.17 LANDSCAPING COMPLETE

A. Measurement: Measurement for Landscaping Complete shall be on a lump sum basis.

B. Payment: Payment for Landscaping Complete shall be on the basis of the lump sum price provided in the BID FORM and shall include the cost of providing and installing landscaping trees/shrubbery in accordance with the landscaping plan, as well as replacing/relocating any disturbed landscaping and landscaping features for the entire project site, including fencing, shrubbery, trees, planter beds, irrigation systems, specific grassing, planter beds, and all labor, materials, tools, testing, freight/hauling, and equipment required.

END OF SECTION

ADDENDUM #5
January 12, 2026

PROJECT: ***Groundwater Wells #4 & #5***

OWNER: City of Flowery Branch, GA

BID DATE: Original Bid Date – Thursday, December 18, 2025 at 2:00 P.M.
Revised Bid Date (Per Addendum #3) – Thursday, January 15, 2026 at 2:00 PM ET

The Bidder is hereby provided the following information:

1. **MISCELLANOUS INFORMATION**

   a. The Contract Time has been changed to 270 days.

   b. he Owner may consider issuing an Administrative Notice to Proceed authorizing the Contractor to issue purchase orders, submit and process submittals, and release equipment for fabrication while keeping the overall construction duration at 270 days.

All bidders shall acknowledge receipt of all addenda issued where indicated on the bid sheets. (Section 00410 – Bid Form, Page 2)

ATTENTION

ALL BIDDERS SHALL ACKNOWLEDGE RECEIPT OF ALL ADDENDA ISSUED WHERE INDICATED ON THE BID SHEETS. (SECTION 00410 – BID FORM, PAGE 2)

BIDDERS ARE MADE AWARE THAT IT IS THEIR RESPONSIBILITY TO VERIFY THAT ANY AND ALL ADDENDA HAVE BEEN RECEIVED PRIOR TO THE SUBMISSION OF THEIR BID. IN THE EVENT ANY BIDDER FAILS TO ACKNOWLEDGE RECEIPT OF ANY SUCH ADDENDA IN THE SPACE PROVIDED ON THE BID FORM, THEIR BID WILL BE CONSIDERED NONRESPONSIVE.

END ADDENDUM

ADDENDUM #6
January 14, 2026

PROJECT: ***Groundwater Wells #4 & #5***

OWNER: City of Flowery Branch, GA

BID DATE: Original Bid Date – Thursday, December 18, 2025 at 2:00 P.M.
Revised Bid Date (Per Addendum #3) – Thursday, January 15, 2026 at 2:00 PM
Revised Bid Date (Per Addendum #6) – Thursday, January 29, 2026 at 1:00 PM

The Bidder is hereby provided the following information:

1. **MISCELLANOUS INFORMATION**

   a. The Bid Date has been changed to Thursday, January 29, 2026 at 1:00 PM ET.

   b. Per Section 01025 – Measurement & Payment, the pre-engineered covered steel structure/shelter, footers, roof, gutter system, connections, etc. shall be the responsibility of the Contractor. See Section 90001 for the requirements of this structure. All costs shall be included under the line item in the Bid Form for "Groundwater Wells #4 & #5 Improvements Complete".

   c. A temporary sediment trap (Sd-4) will be required on site and is to be constructed in accordance with the GSWCC Field Manual for Erosion Control, latest edition. Final location to be coordinated with the Engineer. All costs shall be included under "Erosion & Sediment Control Complete".

All bidders shall acknowledge receipt of all addenda issued where indicated on the bid sheets. (Section 00410 – Bid Form, Page 2)

ATTENTION

ALL BIDDERS SHALL ACKNOWLEDGE RECEIPT OF ALL ADDENDA ISSUED WHERE INDICATED ON THE BID SHEETS. (SECTION 00410 – BID FORM, PAGE 2)

BIDDERS ARE MADE AWARE THAT IT IS THEIR RESPONSIBILITY TO VERIFY THAT ANY AND ALL ADDENDA HAVE BEEN RECEIVED PRIOR TO THE SUBMISSION OF THEIR BID. IN THE EVENT ANY BIDDER FAILS TO ACKNOWLEDGE RECEIPT OF ANY SUCH ADDENDA IN THE SPACE PROVIDED ON THE BID FORM, THEIR BID WILL BE CONSIDERED NONRESPONSIVE.

END ADDENDUM

FLOWERY BRANCH CITY COUNCIL

EXECUTIVE SUMMARY

SUBJECT: Consider amendments to Ordinances 239-N and 240-N to clarify the allowed uses at the Sterling on the Lake outparcels designated as commercial uses on the PUD master plan.

DATE: April 16th, 2026

BUDGET INFORMATION:
ANNUAL- N/A
CAPITAL- N/A

(X)RECOMMENDATION
( ) POLICY DISCUSSION
( ) STATUS REPORT
( ) OTHER

COUNCIL ACTION REQUESTED ON: First Read April 16th, 2026 and Second Read May 7th, 2026

PURPOSE: Adopt amendments to Ordinances 239-N & 240-N to clarify the allowed uses at the Sterling on the Lake outparcels designated as commercial uses on the PUD master plan.

HISTORY: Recently, the Department of Planning and Community Development attended meetings with developers interested in the development of the subject parcels that included convenient stores. Per the approved ordinances the parcels are limited to uses consistent with the Neighborhood Shopping (NS) zoning category.

FACTS AND ISSUES: The current Neighborhood Shopping (NS) zoning code prohibits convenience stores, with or without fuel pump stations; however, such uses were not prohibited at the time the PUD ordinances were adopted. These amendments clarify that convenience stores, with or without fuel pumps, are not permitted on the subject properties.

RECOMMENDED SAMPLE MOTION:
I move to advance the amendments to Ordinances 239-N and 240-N to the May 7th, 2026 Public Hearing

DEPARTMENT: Planning and Community Development

Prepared by: Chris McCrary

Public Hearing Published 04/08/2026 First Reading 04/16/2026
Public Hearing 05/07/2026 Second Reading 05/07/2026

ORDINANCE NO. 239-N & 240-N

AN ORDINANCE AMENDING THE ZONING AND CONCEPTUAL SITE PLAN FOR THE MASTER PLANNED COMMUNITY KNOWN AS "STERLING ON THE LAKE" SPECIFICALLY RELATING TO ORDINANCE NUMBERS 239 AND 240 AND ALL AMENDMENTS THERETO INCLUDING BUT NOT LIMITED TO ORDINANCE NUMBERS 239-D AND 240-D; TO CLARIFY THE PERMISSIBLE USES FOR COMMERICAL NODES WITHIN SAID COMMUNITY; PROVIDING FOR FINDINGS, SEVERABILITY, REPEALING CONFLICTING ORDINANCES, AND FOR ALL OTHER LAWFUL PURPOSES.

WHEREAS, the two commercial nodes within the Sterling on the Lake Community are identified by Tax Parcel Identification Nos. 15047 000885E and 15047 000885C and are shown on Exhibit "A"; and

WHEREAS, the specific uses allowed on those subject parcels are shown on attached exhibit "B"; and

WHEREAS, the City Council of the City of Flowery Branch has considered the standards set forth in Article 34 - Section 34.7 of Zoning Ordinance of the City of Flowery Branch, Georgia; and

WHEREAS, the City Council held a public hearing at the meeting of May 7, 2026 duly noticed as prescribed by law and published in the Gainesville Times, regarding, as shall be set forth in the minutes of said meeting.

NOW THEREFORE, THE COUNCIL OF THE CITY OF FLOWERY BRANCH DOES HEREBY ORDAIN AS FOLLOWS:

SECTION 1. FINDINGS.

The City Council finds that the proposed modified rezoning clarification of the current PUD (Planned Unit Development) is consistent with the adopted standards for governing the exercise of the zoning power consistent with O.C.G.A § 36-66-5 and requirements of the Zoning Ordinance as identified below.

l. The proposed clarification will permit a use that is suitable in view of the use and development of adjacent and nearby property.

2. The proposed clarification is not expected to adversely affect the existing use or usability of adjacent or nearby property.

3. The proposed clarification could be used in accordance with the existing regulations and has a reasonable economic use as currently zoned PUD.

4. This proposed clarification if approved is not expected to result in a use which will or could cause an excessive or burdensome use of existing streets, transportation facilities, utilities, or schools.

5. The proposed clarification is in conformity with the policy and intent of the comprehensive plan and the character area map and future land use plan map.

6. The proposed clarification is considered appropriate in view of existing use(s) and zoning of the subject property and nearby properties.

7. No determination has been made by staff with regard to the value differential between development under the current zoning as opposed to the modified PUD.

8. The proposed clarification will not be a deterrent to the value or improvement of development of adjacent property in accordance with existing regulations.

9. There are no known adverse effects that would result from the clarification in the zoning district map, or change in use, on the character of a zoning district.

10. The proposed clarification is not expected to impact on the environment, including but not limited to, drainage, soil erosion and sedimentation, flooding, air quality and water quality. Compliance with city subdivision and land development regulations will be required, which include but are not limited to soil erosion and sedimentation, stormwater, and flood damage prevention.

SECTION 2. CONDITIONS.

The zoning of the subject parcels, as shown and described on Exhibit "A", to a modified PUD (Planned Unit Development) are to be subject to use conditions as set forth in Exhibit "B". Said Exhibits are incorporated by reference as if fully set forth herein.

SECTION 3. AMENDMENT OF THE ZONING MAP.

This Ordinance is enacted as an amendment to the Zoning Map of Flowery Branch, Georgia. Accordingly, the Zoning Administrator is hereby authorized to update the Official Map consistent with Article 3 of the Zoning Ordinance.

SECTION 4. SEVERABILITY.

Should any section or provision of this Ordinance be declared invalid or unconstitutional by any court of competent jurisdiction, such declaration shall not affect the validity of this Ordinance as a whole or any part thereof which is not specifically declared to be invalid or unconstitutional.

SECTION 5. EFFECTIVE DATE.

The effective date of this Ordinance shall be upon adoption by the City Council of the City of Flowery Branch, Georgia.

Public Hearing Published 04/08/2026 First Reading 04/16/2026
Public Hearing 05/07/2026 Second Reading 05/07/2026

SECTION 6. REPEALER

All ordinances and parts of ordinances in conflict herewith are hereby repealed to the extent of the conflict.

Adopted this 7th day of May, 2026.

_____

Oliver McClellan, Mayor

_____

Shelia Cooper, City Clerk

APPROVED AS TO FORM:

_____

Ted Baggett, City Attorney

Exhibit A

Tax Parcel 15047 000885E consisting of more or less 7.86 acres and sitting at the intersection of Capitola Farm Road and Spout Springs Road.

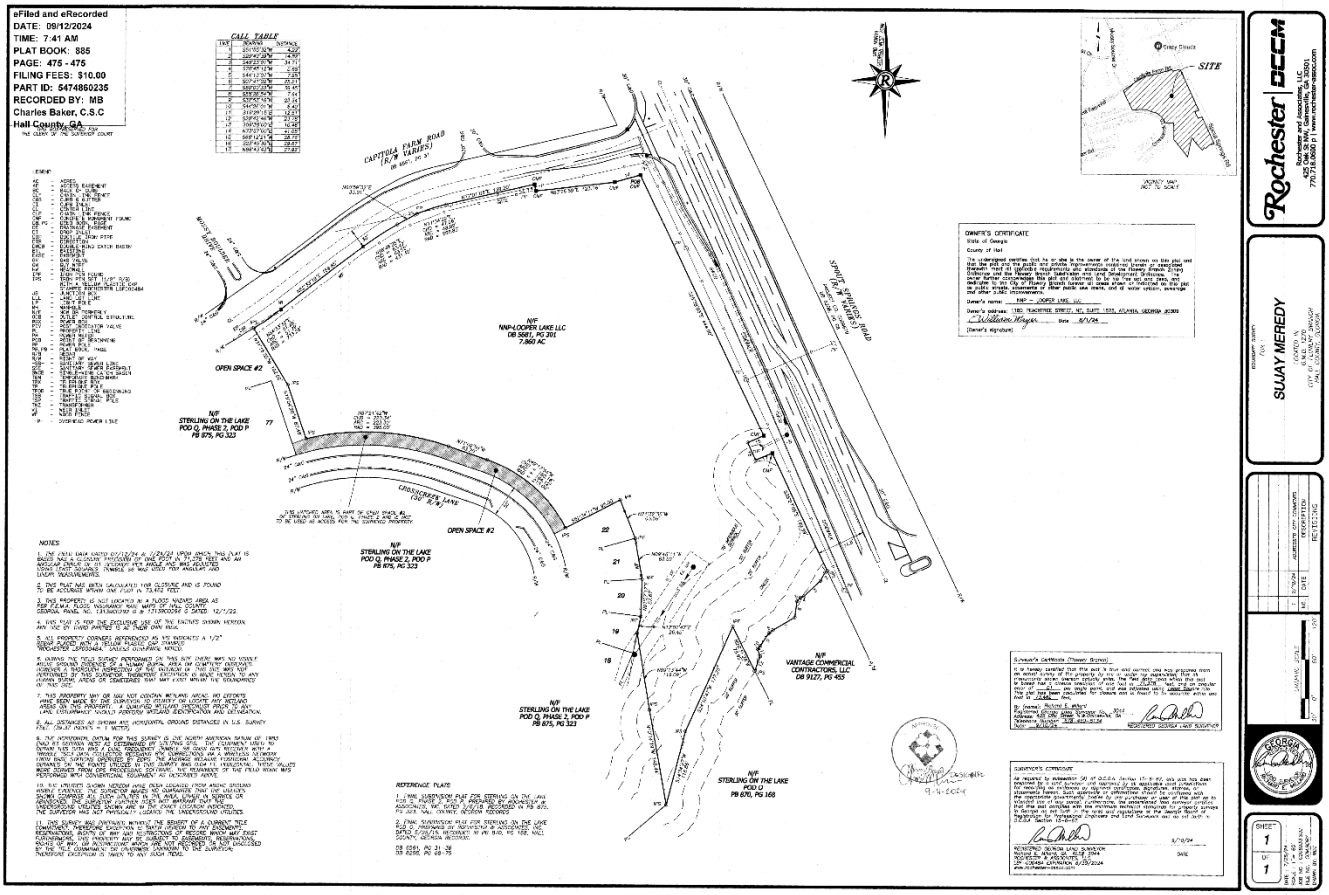

Hall County Tax Parcel 15047 000885C consisting of more or less 4.17 acres and sitting at the intersection of Spout Springs Road and Lake Stirling Boulevard.

Legal Description:

ALL THAT TRACT OR PARCEL OF LAND LYING AND BEING IN G.M.D. 1270, HALL COUNTY, GEORGIA AND BEING MORE PARTICULARLY DESCRIBED AS FOLLOWS:

TO FIND THE POINT OF BEGINNING, COMMENCE AT THE INTERSECTION OF THE SOUTHEASTERLY RIGHT-OF-WAY OF CAPITOLA FARM ROAD (VARIABLE RIGHT-OF-WAY) AND THE SOUTHWESTERLY RIGHT-OF-WAY OF SPOUT SPRINGS ROAD A DISTANCE OF 1050 FEET TO AN IRON PIN SET AND THE POINT OF BEGINNING; THENCE CONTINUING ALONG SAID RIGHT-OF-WAY OF SPROUT SPRINGS ROAD SOUTH 25 DEGREES 23 MINUTES 09 SECONDS EAST A DISTANCE OF 400.34 FEET; THENCE CONTINUING ALONG SAID RIGHT-OF-WAY SOUTH 25 DEGREES 44 MINUTES 31 SECONDS EAST A DISTANCE OF 339.29 FEET TO AN IRON PIN SET; THENCE LEAVING SAID RIGHT-OF-WAY ALONG THE NORTHWESTERLY RIGHT-OF-WAY OF LAKE STERLING BOULEVARD (VARIABLE PUBLIC RIGHT-OF-WAY) THENCE ALONG SAID NORTHWESTERLY RIGHT-OF-WAY OF LAKE STERLING BOULEVARD THE FOLLOWING COURSES AND DISTANCES:

SOUTH 63 DEGREES 52 MINUTES 21 SECONDS WEST A DISTANCE OF 42.94 FEET TO AN IRON PIN SET; THENCE

SOUTH 68 DEGREES 07 MINUTES 06 SECONDS WEST A DISTANCE OF 143.11 FEET TO AN IRON PIN SET; THENCE

SOUTH 57 DEGREES 02 MINUTES 09 SECONDS WEST A DISTANCE OF 226.31 FEET TO AN IRON PIN SET; THENCE

LEAVING SAID RIGHT-OF-WAY ALONG PROPERTY NOW OR FORMERLY STERLING ON THE LAKE COMMUNITY ASSOCIATION, DEED BOOK 7635, PAGE 870; THENCE ALONG SAID PROPERTY LINE THE FOLLOWING COURSES AND DISTANCES:

NORTH 32 DEGREES 57 MINUTES 51 SECONDS WEST A DISTANCE OF 208.12 FEET TO AN IRON PIN SET; THENCE
NORTH 68 DEGREES 36 MINUTES 37 SECONDS WEST A DISTANCE OF 12.84 FEET TO AN IRON PIN SET; THENCE
NORTH 00 DEGREES 01 MINUTES 25 SECONDS EAST A DISTANCE OF 27.90 FEET TO AN IRON PIN SET; THENCE
NORTH 63 DEGREES 24 MINUTES 31 SECONDS EAST A DISTANCE OF 225.90 FEET TO AN IRON PIN SET; THENCE
NORTH 20 DEGREES 34 MINUTES 53 SECONDS EAST A DISTANCE OF 66.83 FEET TO AN IRON PIN SET; THENCE
NORTH 26 DEGREES 31 MINUTES 26 SECONDS WEST A DISTANCE OF 417.16 FEET TO A POINT; THENCE
NORTH 20 DEGREES 42 MINUTES 46 SECONDS EAST A DISTANCE OF 23.78 FEET TO A POINT; THENCE
NORTH 19 DEGREES 29 MINUTES 15 SECONDS WEST A DISTANCE OF 12.51 FEET TO A POINT; THENCE
NORTH 44 DEGREES 26 MINUTES 01 SECONDS EAST A DISTANCE OF 6.40 FEET TO A POINT; THENCE
NORTH 32 DEGREES 53 MINUTES 16 SECONDS EAST A DISTANCE OF 23.54 FEET TO A POINT; THENCE
NORTH 07 DEGREES 41 MINUTES 02 SECONDS EAST A DISTANCE OF 25.21 FEET TO A POINT; THENCE
NORTH 44 DEGREES 13 MINUTES 07 SECONDS EAST A DISTANCE OF 7.95 FEET TO A POINT; THENCE
NORTH 70 DEGREES 45 MINUTES 12 SECONDS EAST A DISTANCE OF 5.68 FEET TO A POINT; THENCE
NORTH 45 DEGREES 23 MINUTES 01 SECONDS EAST A DISTANCE OF 34.71 FEET TO A POINT; THENCE
NORTH 29 DEGREES 49 MINUTES 39 SECONDS EAST A DISTANCE OF 14.82 FEET TO A POINT; THENCE
NORTH 53 DEGREES 12 MINUTES 30 SECONDS EAST A DISTANCE OF 3.96' FEET TO AN IRON PIN SET ALONG THE SOUTHWESTERLY RIGHT OF WAY OF SPROUT SPRINGS ROAD AND THE POINT OF BEGINNING.

SAID TRACT CONTAINING 181,329 SQUARE FEET OF 4.1627 ACRES.

DESCRIPTION WAS CREATED AS A RESULT OF REVIEW OF RECORDED DOCUMENTS, PHYSICAL EVIDENCE LOCATED AND MINIMUM TECHNICAL STANDARD FOR PLAT CLOSURE OF 2020 ALTA/NSPS LAND TITLE SURVEYS.

THE ABOVE IS THE SAME PROPERTY AS DESCRIBED IN TITLE COMMITMENT:

AUGUSTA TITLE, INC.

Commitment No.: 84710

Commitment Date: MAY 19, 2021 at 8:00 a.m.

Public Hearing Published 04/08/2026 First Reading 04/16/2026
Public Hearing 05/07/2026 Second Reading 05/07/2026

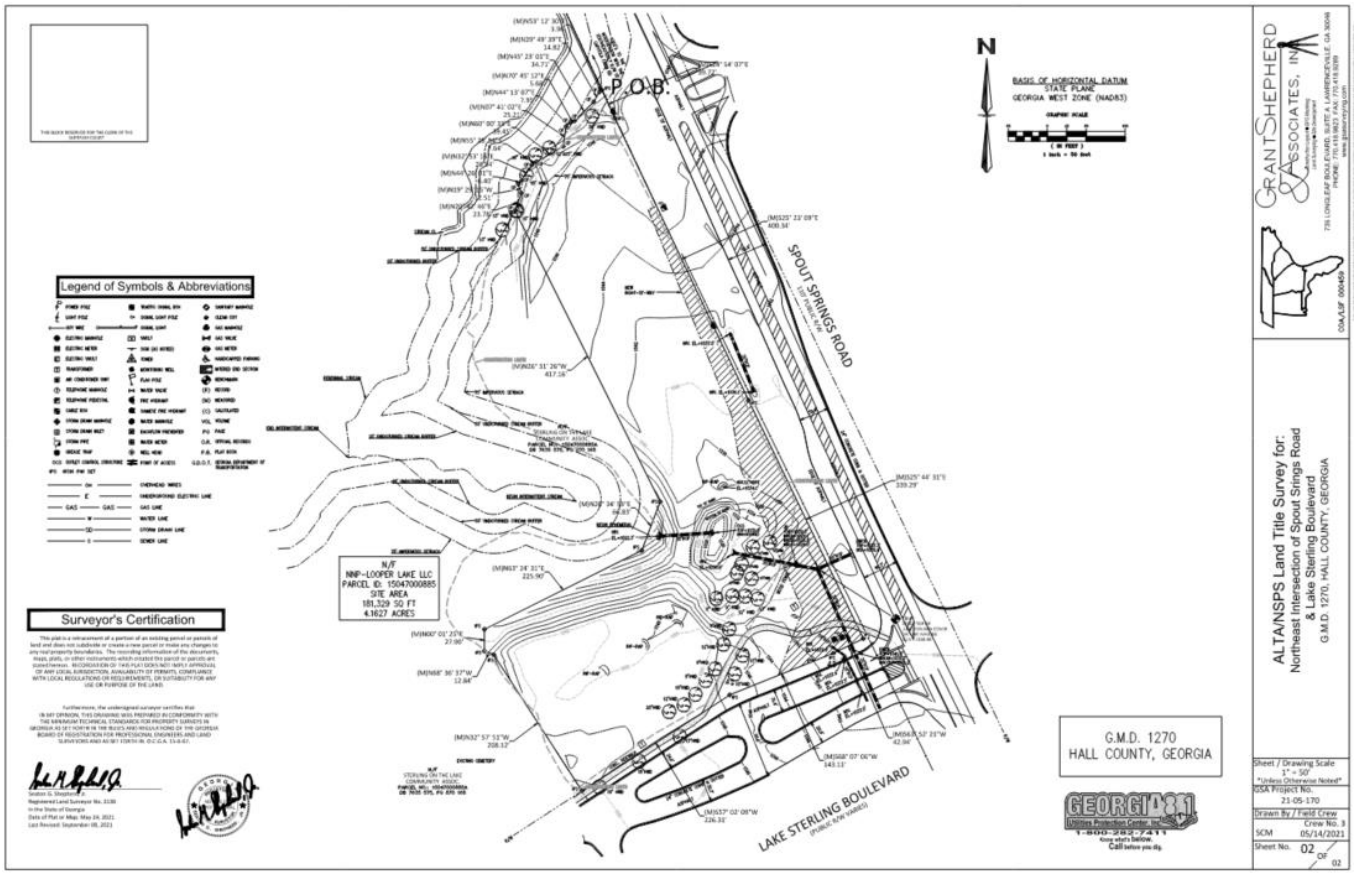

Exhibit B

Permitted Uses on the Commercial Development Sites. The commercial development sites referred to in Section 23 of Exhibit B of Ordinance 239-D and 240-D as "both the 4.17 more or less acre site and the "existing" commercial site shown on the Master Plan for Stirling on the Lake" and identified herein by their Hall County Tax Parcel numbers shall be limited to those uses allowed in the Neighborhood Shopping (NS) Zoning District with the exception of the following uses that are prohibited:

a. Bed and Breakfast Inn.
b. Institutional residential living and care facility, serving no more than 17 persons.
c. Laboratory.
d. Live/work unit.
e. The following personal service establishments; tattoo or massage parlor and body piercing business.
f. Utility company substation.
g. Convenience store, with or without gasoline pumps.